**FineAdjust Applicator**

molex

# Application Tooling Specification Sheet

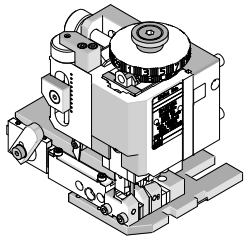

**Order No. 63900-1500**

## FEATURES

- Quick punch removal with the push of a button for fast and easy tooling change
- Applicator designed to industry standard mounting and shut height 135.80mm (5.346")
- Quick set-up time; plus the crimp height, track and feed adjustments can be set without removing the applicator from the press
- Fine adjustment allows users to achieve target with little effort by adjusting in increments of .015mm (.0006") for conductor crimp height and .063mm (.0025") for insulation height
- Independent adjustment rings allow users to quickly adjust the conductor or insulation crimp height without affecting each other
- Directly adapts to most automatic wire processing machines

## SCOPE

Products: SL™ Female Crimp Terminal, 24-30 AWG.

| Terminal Series No | Terminal Order No. | | | Wire Size | | ✳ Insulation Diameter | | Strip Length | |
|---|---|---|---|---|---|---|---|---|---|
| | | | | AWG | mm² | mm | In. | mm | In. |
| 70058 | 016-02-0069 | 016-02-0137 | 70058-0069 | 24-30 | 0.20-0.05 | 0.63-1.00 | .025-.039 | 3.17-3.56 | .125-.140 |
| | 016-02-0082 | 016-02-0139 | 70058-0082 | | | | | | |
| | 016-02-0083 | 016-02-0150 | 70058-0083 | | | | | | |
| | | | 70058-4069 | | | | | | |
| 71851 | 016-02-0119 | 016-02-1113 | 71851-0119 | 24-30 | 0.20-0.05 | 0.63-1.00 | .025-.039 | 3.17-3.56 | .125-.140 |
| | 016-02-1112 | | | | | | | | |

The Insulation Diameter specification for the terminals listed, is 1.01-1.52mm (.040-.060")
✳ This Applicator will crimp small wire insulation diameter below the terminals specification limits.
Applicator 63900-3100 should be used for insulation OD 1.01-1.52mm (.040-.060").

## DEFINITION OF TERMS

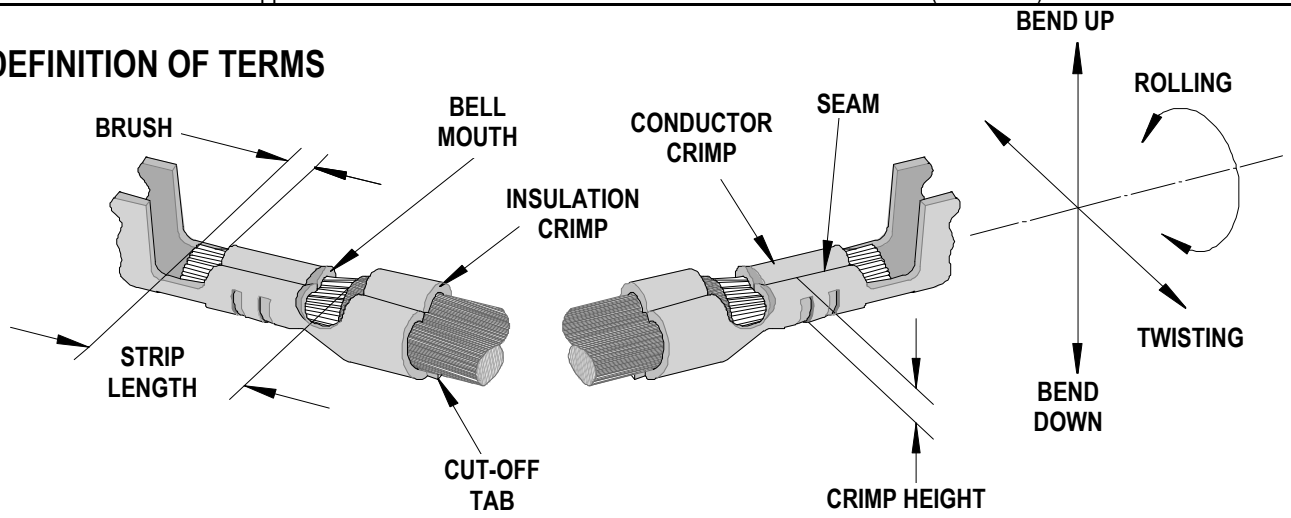


The above terminal drawing is a generic terminal representation. It is not an image of a terminal listed in the scope.

## CRIMP SPECIFICATION

| Terminal Series No. | Bell mouth | | Cut-off Tab Maximum | | | | Conductor Brush | |
|---|---|---|---|---|---|---|---|---|
| | | | Front | | Rear | | | |
| | mm | In. | mm | In. | mm | In. | mm | In. |
| 70058 | 0.20-0.50 | .008-.020 | 0.13 | .005 | .08 | .003 | 0.00-1.00 | .000-.039 |
| 71851 | 0.20-0.50 | .008-.020 | 0.13 | .005 | .08 | .003 | 0.00-1.00 | .000-.039 |

| Terminal Series No. | Bend up Bend down | | Twist Roll | | Punch Width mm (Ref) | | | | Seam |
|---|---|---|---|---|---|---|---|---|---|
| | Degree | | Degree | | Conductor | | Insulation | | Seam shall not be open and no wire allowed out of the crimping area |
| | | | | | mm | In | mm | In | |
| 70058 | 3 | 3 | 3 | 8 | 1.00 | .039 | 1.40 | .055 | |
| 71851 | 3 | 3 | 3 | 8 | 1.00 | .039 | 1.40 | .055 | |

After crimping, the conductor profile should measure the following.

| Terminal Series No. | Wire Size | | Conductor Crimp Height | | Pull Force Minimum | |
|---|---|---|---|---|---|---|
| | AWG | $mm^2$ | mm | In. | N | Lb. |
| 70058 | 24 | 0.20 | 0.79-0.84 | .031-.033 | 22.2 | 5.0 |
| | 26 | 0.12 | 0.74-0.79 | .029-.031 | 13.3 | 3.0 |
| | 28 | 0.08 | 0.71-0.76 | .028-.030 | 8.9 | 2.0 |
| | 30 | 0.05 | 0.66-0.71 | .026-.028 | 6.7 | 1.5 |
| 71851 | 24 | 0.20 | 0.79-0.84 | .031-.033 | 22.2 | 5.0 |
| | 26 | 0.12 | 0.74-0.79 | .029-.031 | 13.3 | 3.0 |
| | 28 | 0.08 | 0.71-0.76 | .028-.030 | 8.9 | 2.0 |
| | 30 | 0.05 | 0.66-0.71 | .026-.028 | 6.7 | 1.5 |

Pull Force should be measured with no influence from the insulation crimp.
The above specifications are guidelines to an optimum crimp.

## PARTS LIST

| FineAdjust Applicator 63900-1500 | | | | |
|---|---|---|---|---|
| **Item** | **Order No** | **Engineering No.** | **Description** | **Quantity** |
| **Perishable Tooling** | | | | |
| | 63900-1570 | 63900-1570 | Tool Kit (All "Y" Items) | REF |
| 1 | 63444-1018 | 63444-1018 | Conductor Punch | 1 Y |
| 2 | 63445-1031 | 63445-1031 | Conductor Anvil | 1 Y |
| 3 | 63454-0112 | 63454-0112 | Insulation Punch (Overlap) | 1 Y |
| 4 | 63445-1425 | 63445-1425 | Insulation Anvil | 1 Y |
| 5 | 63443-0003 | 63443-0003 | Cut-Off Plunger | 2 Y |
| 6 | 63443-0012 | 63443-0012 | Front Plunger Retainer | 1 Y |
| 7 | 63443-1402 | 63443-1402 | Cut-off Die Blade | 1 Y |
| 8 | 63443-1002 | 63443-1002 | Rear Plunger Retainer | 1 Y |
| **Other Components** | | | | |
| 9 | 11-17-0022 | 1739-21 | Hold Down Spring | 1 |
| 10 | 11-18-4094 | 60709A111 | Front Cover | 1 |
| 11 | 11-24-1067 | 4996-4 | Cut-Off Plunger Spring | 2 |
| 12 | 11-24-1149 | 4996-37 | Shank | 1 |
| 13 | 11-40-4274 | 8331-8 | Hold Down Blade | 1 |
| 14 | 63443-0025 | 63443-0025 | Dual Carrier Key | 1 |
| 15 | 63443-0090 | 63443-0090 | Wire Stop | 1 |
| 16 | 63443-2600 | 63443-2600 | Front Spacer | 1 |
| 17 | 63443-2205 | 63443-2205 | 5.0mm Spacer | 1 |
| 18 | 63443-2306 | 63443-2306 | 3.30mm Spacer | 1 |
| 19 | 63443-2801 | 63443-2801 | Cut-Off Plunger Striker | 1 |
| 20 | 63443-2907 | 63443-2907 | Wire Hold-Down Plunger | 1 |
| 21 | 63443-3060 | 63443-3060 | Rear Plunger Striker | 1 |
| 22 | 63443-6111 | 63443-6111 | Rear Cover | 1 |
| 23 | 63600-0021 | 63600-0021 | Compression Spring | 1 |
| 24 | 63860-2015 | 63860-2015 | Drag Frame | 1 |
| **Frame** | | | | |
| 25 | 63800-4901 | 63800-4901 | Top | 1 |
| 26 | 63801-3281 | 63801-3281 | Base | 1 |
| 27 | 63801-4650 | 63801-4650 | Track | 1 |
| **Hardware** | | | | |
| 28 | N/A | N/A | M3 by 6 Long SHCS | 2** |
| 29 | N/A | N/A | M3 by 6 Long FHCS | 1** |
| 30 | N/A | N/A | M4 by 6 Long SHCS | 1** |
| 31 | N/A | N/A | M4 by 10 Long SHCS | 2** |
| 32 | N/A | N/A | M4 by 12 Long BHCS | 2** |
| 33 | N/A | N/A | M4 by 50 Long SHCS | 2** |
| 34 | N/A | N/A | M5 by 12 Long SHCS | 1** |
| 35 | N/A | N/A | #5-40 by 3/8" Long SHCS | 1** |
| 36 | N/A | N/A | #10-32 by 3/8"Long SSS | 1** |
| 37 | N/A | N/A | #10-32 Hex Nut | 1** |
| ** Available from an industrial supply company such as MSC (1-800-645-7270). | | | | |

## Assembly Drawing

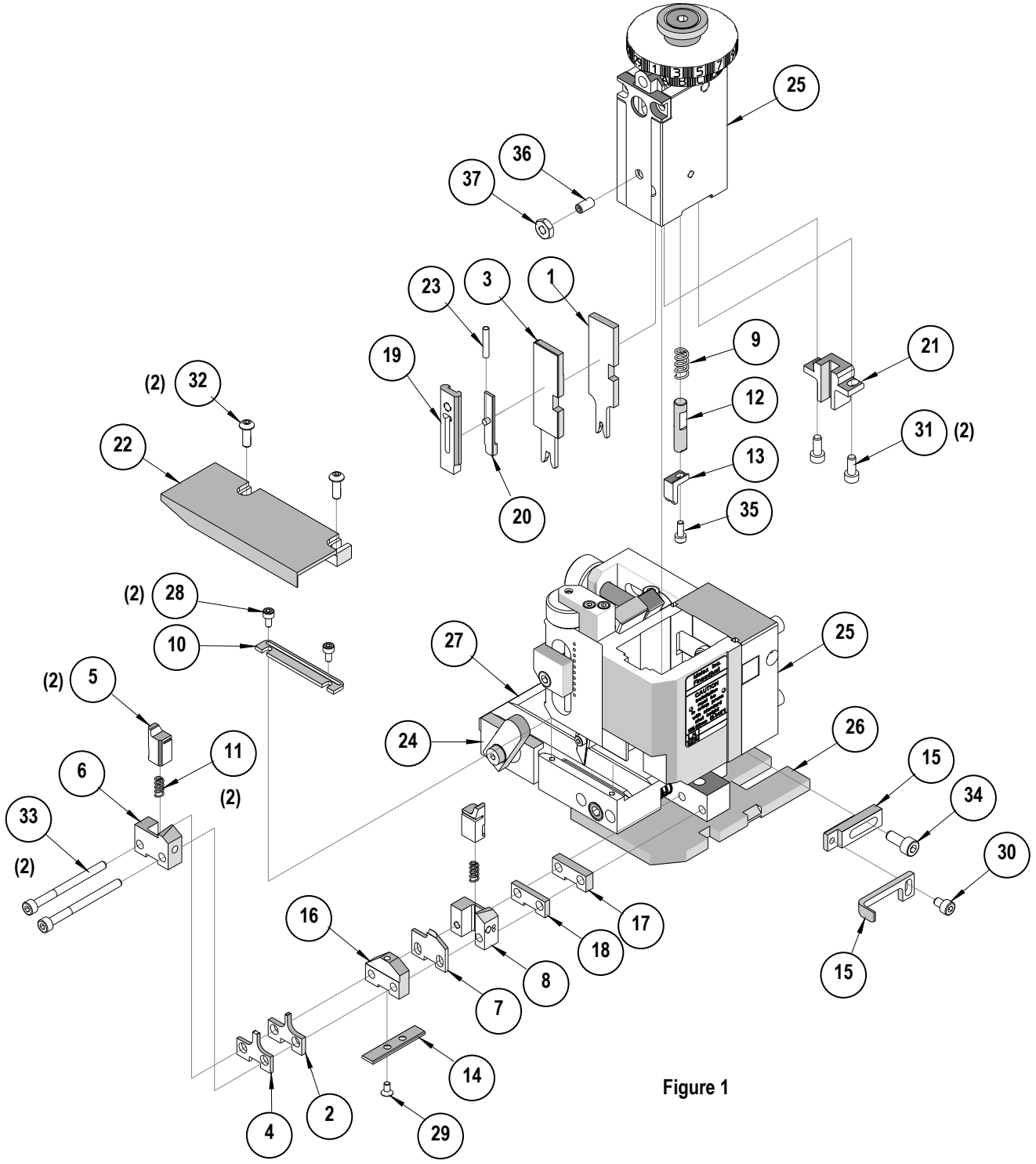


Figure 1

## NOTES

1. Molex recommends an extra perishable tooling kit be maintained at your facility.
2. Verify tooling alignment by manually cycling the press and Applicator before crimping under power. Check that all screws are tight.
3. Slugs, Terminals, Dirt and Oil should be kept clear of work area.
4. Wear safety glasses at all times.
5. For recommended maintenance refer to the FineAdjust Manual.

**CAUTION**: This applicator should only be used in a press with a shut height of 135.8 mm (5.346”). Tooling damage could result at a lower setting.

**CAUTION**: To prevent injury never operate this Applicator without the guards supplied with the press or wire-processing machine in place. Reference the press or wire processing manufacturer’s instruction manual.

**CAUTION**: Molex crimp specifications are valid only when used with Molex terminals, applicators and tooling.

http://www.molex.com

Общество с ограниченной ответственностью «МосЧип» ИНН 7719860671 / КПП 771901001
Адрес: 105318, г.Москва, ул.Щербаковская д.3, офис 1107

**Данный компонент на территории Российской Федерации**

**Вы можете приобрести в компании MosChip.**

Для оперативного оформления запроса Вам необходимо перейти по данной ссылке:

http://moschip.ru/get-element

Вы можете разместить у нас заказ для любого Вашего проекта, будь то серийное производство или разработка единичного прибора.

В нашем ассортименте представлены ведущие мировые производители активных и пассивных электронных компонентов.

Нашей специализацией является поставка электронной компонентной базы двойного назначения, продукции таких производителей как XILINX, Intel (ex.ALTERA), Vicor, Microchip, Texas Instruments, Analog Devices, Mini-Circuits, Amphenol, Glenair.

Сотрудничество с глобальными дистрибьюторами электронных компонентов, предоставляет возможность заказывать и получать с международных складов практически любой перечень компонентов в оптимальные для Вас сроки.

На всех этапах разработки и производства наши партнеры могут получить квалифицированную поддержку опытных инженеров.

Система менеджмента качества компании отвечает требованиям в соответствии с ГОСТ Р ИСО 9001, ГОСТ РВ 0015-002 и ЭС РД 009

**Офис по работе с юридическими лицами:**

105318, г.Москва, ул.Щербаковская д.3, офис 1107, 1118, ДЦ «Щербаковский»

Телефон: +7 495 668-12-70 (многоканальный)

Факс: +7 495 668-12-70 (доб.304)

E-mail: info@moschip.ru

Skype отдела продаж:
moschip.ru
moschip.ru_4
moschip.ru_6
moschip.ru_9