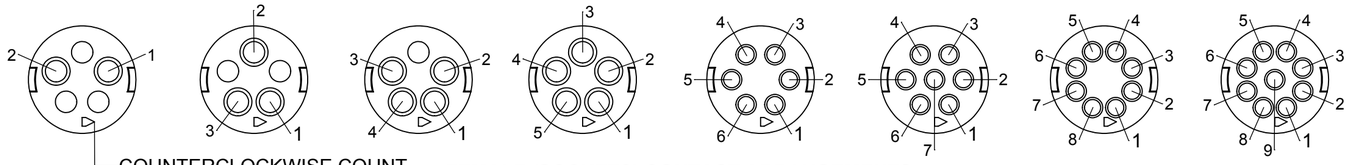

FEMALE (SOCKETS) CONTACT ARRANGEMENTS
REAR (WIRING SIDE) VIEW

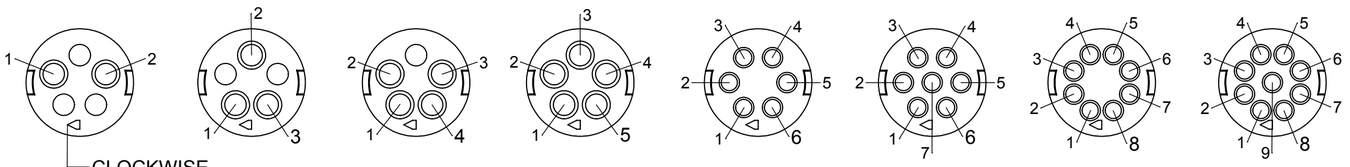

MALE (PINS) CONTACT ARRANGEMENTS
REAR (WIRING SIDE) VIEW

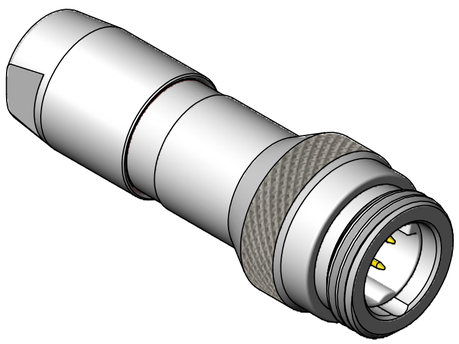

TYPICAL CABLE-TO-CABLE PIN (MALE)
(TS2L7M26B SHOWN HERE)

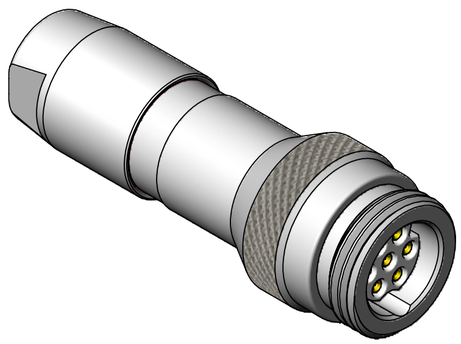

TYPICAL CABLE-TO-CABLE SOCKET (FEMALE)
(TS2L7F26B SHOWN HERE)

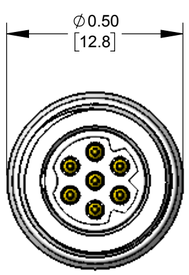

TS2L7M26B SHOWN HERE

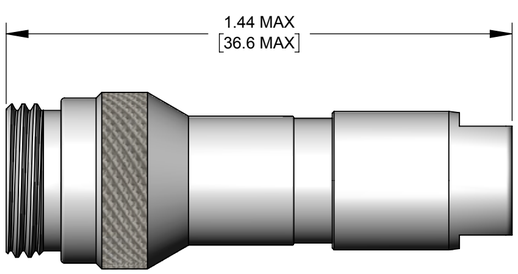

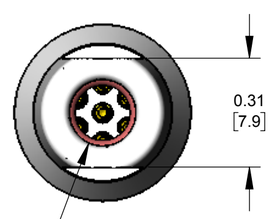

BACK NUT DIA.
SIZE A: 0.150 [3.81] DIA.
SIZE B: 0.190 [4.83] DIA.
SIZE C: 0.230 [5.84] DIA.

ALL DIMENSIONS FOR REFERENCE ONLY

TOOL	TOOL TYPE	POSITIONER	CONTACT SIZE	WIRE SIZES
EN3CR	HAND CRIMP TOOL	EN2POS20	20 and 22	20 and 22 AWG
		EN3POS26	26	26, 28, and 30 AWG
EN3CRAUTO	PNEUMATIC CRIMP TOOL	EN2POS20	20 and 22	20 and 22 AWG
		EN3POS26	26	26, 28, and 30 AWG
EN2CRL	HAND CRIMP TOOL LARGE FRAME	EN2POS20L	20 and 22	20, 22, 24, and 26 AWG
EN2CRAUTOL	PNEUMATIC CRIMP TOOL LARGE FRAME			
INSTOOL20	CONTACT INSERTION	--	20	20, 22, 24, and 26 AWG
INSTOOL26		--	26	26, 28, and 30 AWG
REMTOOL20	CONTACT EXTRUCTION	--	20	20, 22, 24, and 26 AWG
REMTOOL26		--	26	26, 28, and 30 AWG

TS2 L 7 M 26 B - K

TS2 Series

Connector Type:
L - Cable-to-Cable

# of contacts:
2-5 for #20
6-9 for #26

Gender:
M - Male (Pin)
F - Female (Socket)

Contact Size:
20 - 20, 22, 24, 26 AWG wires
26 - 26,28, 30 AWG wires

Clamp Set per Cable O.D. Range
for Cable-End and Cable-to-Cable only:
A - 0.110 - 0.140 [2.8 - 3.6]
B - 0.140 - 0.180 [3.6 - 4.6]
C - 0.180 - 0.216 [4.6 - 5.5]

Options:
K - Kit Packaging (one unit/bag)
[blank] - Bulk Packaging
Consult factory for other options

Refer to TS2P SERIES drawing for Panel-mount connectors.
Refer to TS2C SERIES drawing for mating Cable-End connectors.

SPECIFICATIONS:	
MECHANICAL	
Mating / Locking Type:	Threaded Coupling
Life	5,000 cycles minimum
Operating Forces	10 lb. [44.5 N] maximum Insertion or Withdrawal
Vibration	Mil-Std 202G Method 201A
Panel-Mount Hex Nut Tongue	40 in-lb [4.5 Nm] maximum
Cable Securing System:	Threaded on metal Clamp
ELECTRICAL	
Voltage Rating	125 V AC/DC for 2-5 contact arrangements
	30 V AC/DC for 6-9 contact arrangements
Current Rating	Refer to Current Carry Capacity Table
Insulation Resistance	1000 MΩ minimum
Contact Resistance	10 mΩ typical
EMI Shielding	360°
ENVIRONMENTAL	
Temperature Limits	-40ºC to +135ºC (-40ºF to +275°F)
Operating Temperature Range	Refer to Current Carry Capacity Table
Moisture Resistance	Mil-Std 202G Method 106G
Insulation Resistance	Mil-Std 202G Method 302
Thermal Shock	Mil-Std 202G Method 107G
Salt Atmosphere (Corrosion)	Mil-Std 202G Method 101E
Ingress Protection Ratings	IP66, IP67, IP68 (6 ft. for 24 hours) per IEC60529, NEMA 250 6P
MATERIAL	
Outer Shell Metal components	Copper Alloy, electroless nickel plated
Hex Nut & Inner Metal components	Copper Alloy, nickel plated
Electrical Insulator	Medical Technology LCP, natural
Seal O-rings	Thermoplastic Elastomer
Contacts Assembly	Copper Alloy, gold plated with Stainless Steel locking clip

Contacts	Wire (awg)	Current Rating (A) at Operating Temperature (°C)					Minimum Test Voltage (V rms)	Voltage (V rms) tested per UL2238
		45°C max.	65°C max.	85°C max.	100°C max.	110°C max.		
2 #20	20	10	9	8	7*	6	1300	125
	22	8.5	7.5	7.5	5.5*	4.5		
	24	7	6	5	4.5*	3.5		
	26	4	4	3.5	3.5*	2.5		
3 #20	20	9.5	8.5	7.5	6.5*	5		
	22	8	7	6	5*	4		
	24	6	5.5	4.5	4*	3		
	26	3.5	3.5	3	3*	2.5		
4 #20	20	9	8	7	6*	5		
	22	7.5	6.5	5.5	4.5*	3.5		
	24	5	4.5	4	3.5*	2.5		
	26	3	3	2.5	2.5*	2		
5 #20	20	8	7.5	6.5	5.5*	4.5		
	22	6.5	5.5	5	4*	3		
	24	4.5	4	3.5	3*	2.5		
	26	2.5	2.5	2	2*	1.5		
6-7 #26	26	2.5	2.5	2	2*	1.5	1000	30
	28	2	2	1.5	1.5*	1		
	30	1.5	1.5	1	1*	.5		
8-9 #26	26	2	2	1.5	1.5*	1		
	28	1.5	1.5	1	1*	.5		
	30	1	1	.5	.5*	.5		

*Temperature Rise does not exceed 30°C when tested according to UL2238. All other recommended current ratings are based on the Relative Thermal Index of the insulating material.

CUSTOMER DRAWING

REV	ECO NUMBER	DATE	BY	APVD
0B	10 lb WAS 5 lb	09/22/16	PNK	SRC
0A	PRELIMINARY	04/20/16	PNK	SRC

REVISIONS

UNLESS OTHERWISE SPECIFIED
1. ALL DIMENSIONS IN INCHES [mm]
- TWO PLACE DECIMALS ±0.02 [0.5]
- THREE PLACE DECIMALS ±0.005 [0.13]

DO NOT SCALE DRAWING

THIS DRAWING DESCRIBES A DESIGN CONSIDERED PROPRIETARY IN NATURE, DEVELOPED AND MANUFACTURED BY SWITCHCRAFT INC. AND IS RELEASED ON A CONFIDENTIAL BASIS FOR IDENTIFICATION PURPOSES ONLY.

SIZE	WIDTH	MULT	LBS/M	TEMPER

FINISH
SPEC No.
MATERIAL
SPEC No.
FIRST USED ON
SCALE 3:1

DATE DRAWN	BY	CHKD	APVD
04/20/16	PNK	PNK 04/20/16	SRC 04/20/16

Switchcraft®

SHEET 1 OF 2

NAME CABLE-TO-CABLE TS2 SERIES CONNECTOR
PART No. TS2L SERIES
REV 0B

SolidWorks CAD File

STEP 1

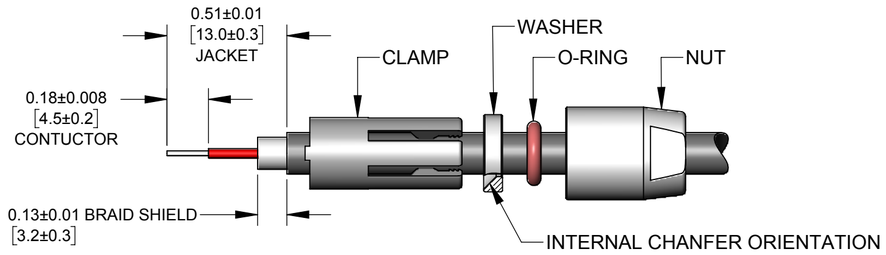

FEED THE FREE END OF CABLE THROUGH THE NUT, O-RING, WASHER, AND CLAMP IN THE ORDER SHOWN.

STRIP THE CABLE JACKET, THE CONDUCTORS, AND THE CABLE SHIELDING AS SHOWN.

STEP 2

ONE CONTACT SHOWN HERE FOR CLARITY

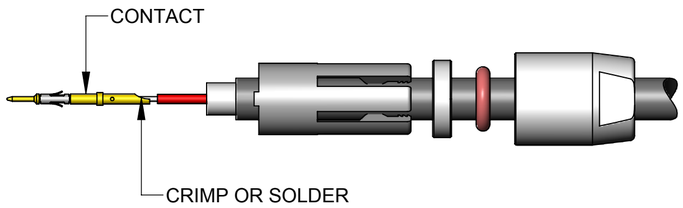

CRIMP CONDUCTORS TO CONTACTS USING HAND OR PNEUMATIC CRIMP TOOL* WITH CRIMP POSITIONER* SET PER CONTACT SIZE AND WIRE GAGE.

IF SOLDERING, IT IS RECOMMENDED TO SOLDER CONDUCTORS TO CONTACTS BEFORE INTALLATION.

STEP 3

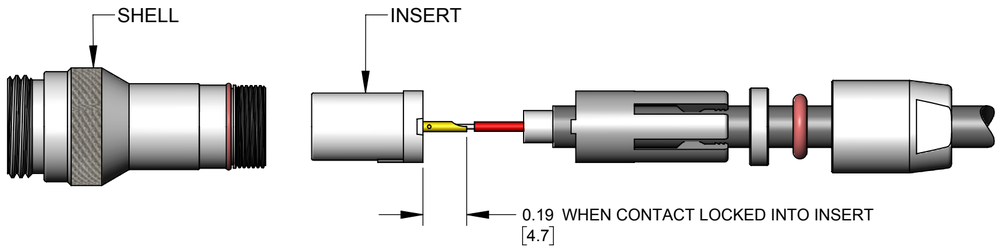

GUIDE EACH WIRED CONTACT INTO INSERT HOLE AND PUSH UNTIL CONTACT SNAPS IN PLACE. USE INSERTION TOOL* IF NECESSARY.

COLORED CONDUCTORS CAN BE ASSIGNED TO CONTACT POSITION NUMBERS AS DESIRED.

TO REMOVE A CONTACT, INSERT THE EXTRACTION TOOL* FROM THE FRONT OF INSERT AND LIGHTLY PRESS THE SPRING LOADED PLUNGER INWARD TO PUSH THE CONTACT OUT.

STEP 4

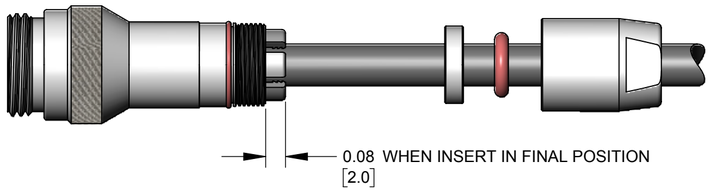

ALIGN INSERT ASSEMBLY INTO SHELL FOLLOWED BY THE CLAMP. PUSH CLAMP LIGHTLY FORWARD AND ROTATE UNTIL THE ASSEMBLY SNAPS IN THE FINAL POSITION SHOWN.

STEP 5

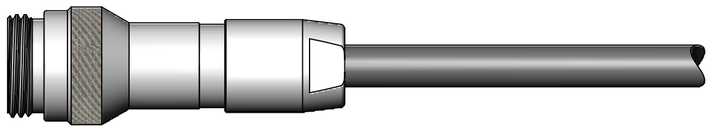

COMPLETED ASSEMBLY

SLIDE WASHER, O-RING, AND NUT AGAINST CLAMP AND THREAD NUT ON UNTIL TIGHT - NOT TO EXCEED 9 IN-LB [1 Nm] TORQUE.
A 5/16" [8mm] WRENCH CAN BE USED, IF NECESSARY.

*REFER TO TOOLS TABLE ON THIS DRAWING FOR SELECTION OF TOOLS PER CONTACT AND WIRE SIZE.

TS2 SERIES CABLE-TO-CABLE FIELD ASSEMBLY INSTRUCTIONS

SCALE 2:1	Switchcraft®
DATE DRAWN 04/20/16	SHEET 2 OF 2
DRAWN BY PNK	PART No. TS2L SERIES_CD / REV 0A

SolidWorks CAD File C

Mouser Electronics

Authorized Distributor

Click to View Pricing, Inventory, Delivery & Lifecycle Information:

Switchcraft:

TS2L8M26B TS2L3F20A TS2L5M20C TS2L5F20C TS2L9F26B TS2L9M26B TS2L2M20A TS2L2F20A TS2L6F26C TS2L6M26C TS2L3M20A TS2L7F26C TS2L4F20A TS2L5M20A TS2L8M26C TS2L4M20A TS2L2M20B TS2L6M26A TS2L2F20B TS2L6F26A TS2L8F26A TS2L7M26A TS2L3F20B TS2L3M20B TS2L4F20B TS2L7F26A TS2L9F26A TS2L5M20B TS2L9M26A TS2L2M20C TS2L3M20C TS2L7F26B TS2L3F20C TS2L6F26B TS2L6M26B TS2L8M26A TS2L4F20C TS2L7M26B TS2L4M20C TS2L7M26C TS2L8F26C TS2L4M20B TS2L5F20B TS2L5F20A TS2L9F26C TS2L9M26C TS2L2F20C TS2L8F26B TS2LCAP

Общество с ограниченной ответственностью «МосЧип» ИНН 7719860671 / КПП 771901001
Адрес: 105318, г.Москва, ул.Щербаковская д.3, офис 1107

Данный компонент на территории Российской Федерации

Вы можете приобрести в компании MosChip.

Для оперативного оформления запроса Вам необходимо перейти по данной ссылке:

http://moschip.ru/get-element

Вы можете разместить у нас заказ для любого Вашего проекта, будь то серийное производство или разработка единичного прибора.

В нашем ассортименте представлены ведущие мировые производители активных и пассивных электронных компонентов.

Нашей специализацией является поставка электронной компонентной базы двойного назначения, продукции таких производителей как XILINX, Intel (ex.ALTERA), Vicor, Microchip, Texas Instruments, Analog Devices, Mini-Circuits, Amphenol, Glenair.

Сотрудничество с глобальными дистрибьюторами электронных компонентов, предоставляет возможность заказывать и получать с международных складов практически любой перечень компонентов в оптимальные для Вас сроки.

На всех этапах разработки и производства наши партнеры могут получить квалифицированную поддержку опытных инженеров.

Система менеджмента качества компании отвечает требованиям в соответствии с ГОСТ Р ИСО 9001, ГОСТ РВ 0015-002 и ЭС РД 009

Офис по работе с юридическими лицами:

105318, г.Москва, ул.Щербаковская д.3, офис 1107, 1118, ДЦ «Щербаковский»

Телефон: +7 495 668-12-70 (многоканальный)

Факс: +7 495 668-12-70 (доб.304)

E-mail: info@moschip.ru

Skype отдела продаж:
moschip.ru
moschip.ru_4
moschip.ru_6
moschip.ru_9