Flavus 2.4 GHz Snap-In Antenna

Product Specification

1 Features

- Designed for 2.4 GHz applications [Bluetooth™, WiFi™ (802.11b/g), Zigbee™, WiMedia™ etc.]
- Intended for Snap-In mounting
- Supplied in trays

2 Description

The Flavus antenna is intended for use with all 2.4 GHz applications. The antenna is a halfwave type and this makes the antenna less sensitive to ground and surrounding components and facilitates easy antenna placement on the PCB. The antenna uses plastic snap ins to attach to the PCB, no need for soldering.

3 Application

- Industrial applications
- Network nodes
- Access points
- Portable PCs
- Wireless cable modems

Contents

1 Features	1
2 Description	1
3 Application	1
4 Model name	3
5 General data	3

4 Model name

10 20 B5743 - XX

- **PCB Thickness**
  - **01 = 0.8 mm**
  - **02 = 1.0 mm**
  - **03 = 1.2 mm**
  - **04 = 1.6 mm**
  - **05 = 1.8 mm**
- **Drawing No.**
- **Technology**
  -Plastic Carrier
- **Antenna Family**
  -Snap-In

5 General data

Product Name	Flavus 2.4 GHz
Article No.	1020B5743-01..05
Frequency	2.4-2.5 GHz
Polarization	Linear
Operating temperature	-40 to + 85 degC
Impedance	50 Ohm
Weight	0.6 gram
Antenna type	Snap-in

6 Electrical characteristics

	Characteristics			**Conditions***
	Min	Typ	Max	
Peak Gain	3.5 dBi	4.0 dBi	4.3 dBi	Frequency 2.4-2.5 GHz, Measured in 3D chamber (near field)
Efficiency	62%	65%	66%	
VSWR	1.2:1	1.5:1	2.1:1	Frequency 2.4-2.5 GHz, Measured in Network Analyzer

*Note all data provided in this table are based on the Antenova reference board

7 Electrical performance

7.1 Voltage Standing Wave Ratio

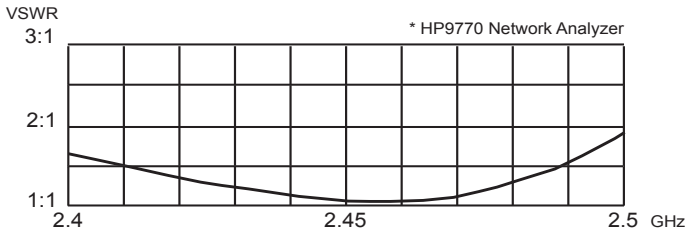

7.2 3D-Radiation

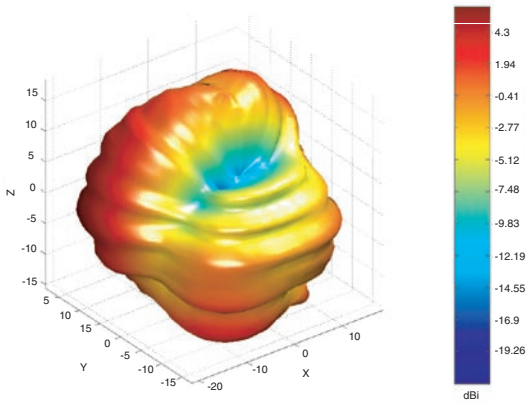

7.3 Radiation patterns

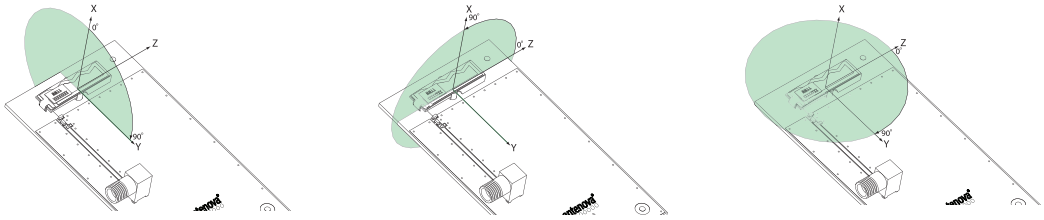

Total polarization

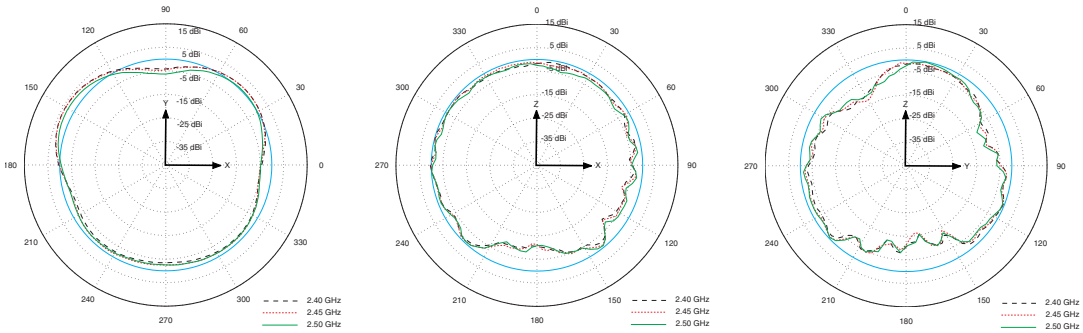

8 Antenna Dimensions

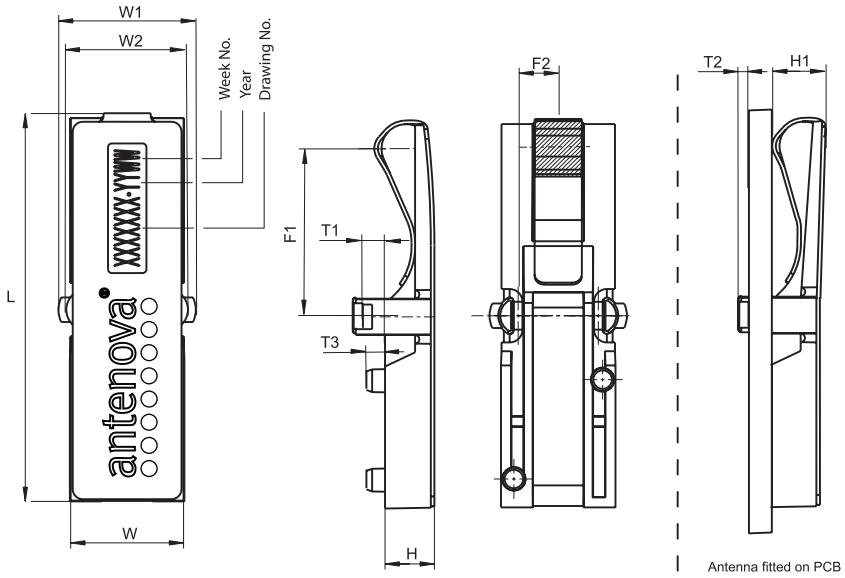

L	W	W1	W2	H	H1	F1	F2	T1	T2	T3
Length	Width	Width	Width	Height	Height	Feed	Feed	PCB		
27.3 ±0.2	7.9 ±0.2	9.6±0.2	8.5±0.2	3.45±0.1	3.85±0.1	11.85±0.2	2.8±0.1	T1±0.05	1.35±0.2	1.3±0.1

Dimensions in millimeters

9 Antenna Footprint

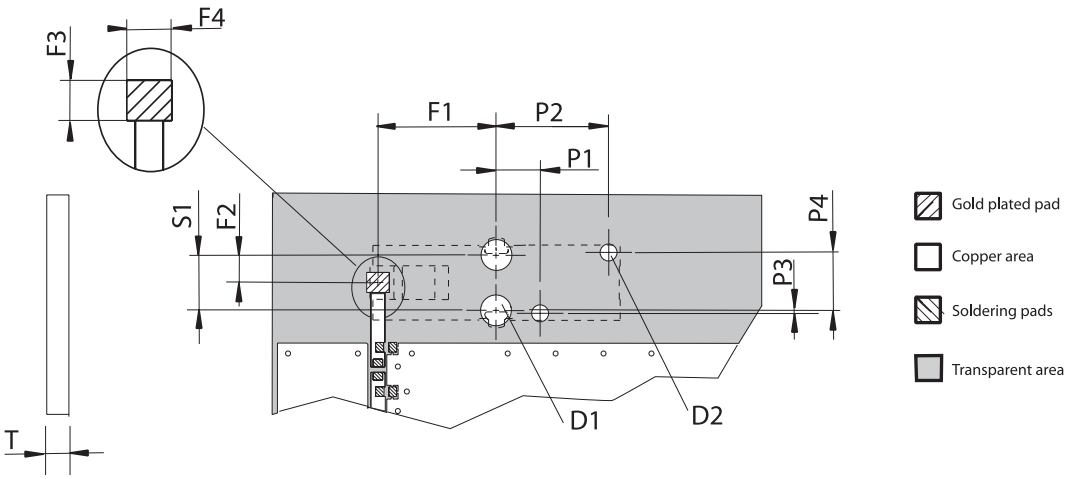

F1	F2	F3	F4	S1	P1	P2	P3	P4	D1	D2	T*
Feed	Feed	Feed	Feed	Snap-In	Position	Position	Position	Position	Diameter	Diameter	PCB
11.85±0.1	2.8±0.1	2±0.05	2.25±0.05	5.6±0.1	4.5±0.1	11.5±0.1	0.3±0.1	5.9±0.1	3.05±0.1	1.75±0.1	0.8, 1.0, 1.2, 1.6, 1.8

Dimensions in millimeters

10 Electrical interface

10.1 Transmission line and matching

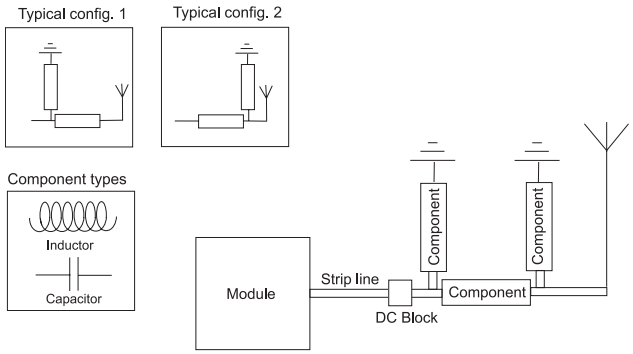

The matching network has to be individually designed using one, two or three components.

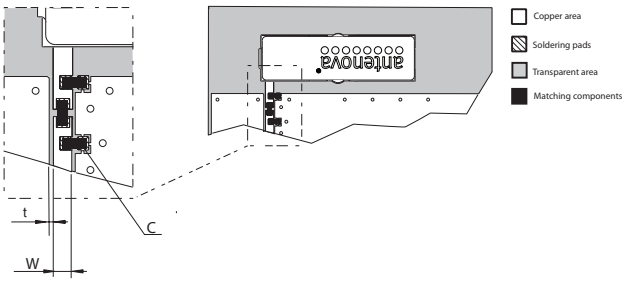

t, w = Unique dimensioning according to your PCB *

C = Inductor and capacitor values according to your specific device*

* Antenova provides this service upon request

10.2 Test board dimensions

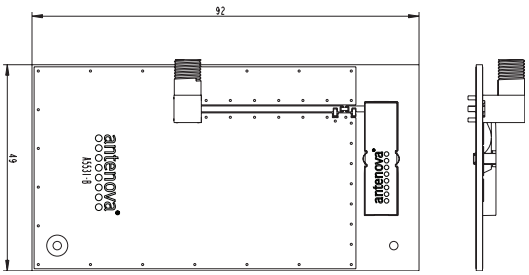

The testboard is designed for evaluation purposes for the Flavus 2.4 GHz antenna. The card has the same size as a typical PCMCIA card and is fitted with an SMA connector.

10.3 Test board matching

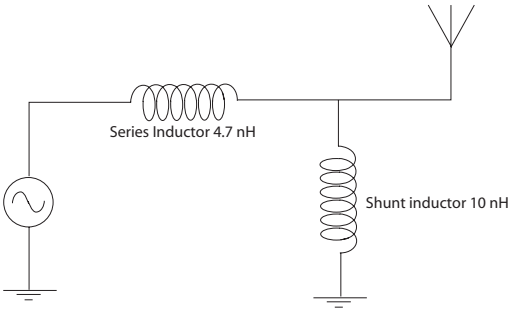

The testboard is matched with above specified component.

Note! The component value(s) will vary depending on size of PCB, surrounding components etc.

11 Reliability

11.1 Temperature and Humidity

Item	Standard	Low	High	Duration
Operating temperature	EN/IEC 60068-2-2, Test Bd: Dry heat	-30 degC	+90 degC	-
Temperature cycling	EN/IEC 60068-2-14, Test Na: Change of temperature	-30 degC	+90 degC	100cycles / 10min
Storage life Humidity	EN/IEC 60068-2-1, Test Ca: Damp heat	+40 degC / 93% RH		96 h
Storage life Low temperature	EN/IEC 60068-2-1, Test Ad: Cold	-25 degC	-	200 h
Storage life High temperature	EN/IEC 60068-2-2, Test Bb: Dry heat	-	+ 90 degC	1000 h

11.2 Mechanical

Item	Standard	Specification	Duration
Contact force		Antenna is mounted on reference board. and a pressure gauge is applied to antenna contact.	
Drop test		Dummy weight: 150g Height: 170cm	One drop at each side, total drops: 6
Vibration	EN/IEC 60068-2-6, Test Fc (sinusoidal)	Acceleration spectral density:10-1000Hz Acceleration: 20m/s2 Number of axes: 3 mutually perpendicular	5 cycles per axis

11.3 Miscellaneous

Item	Standard	Specification	Duration
Contact pad Corrosion	ASTM B117	SO2 Concentration: 25 ppm Temperature : 25 Deg C RH: 93%	96 hours

11.4 Judgement standard

The judgement of the above tests should be made as follows:

1. Visual inspection - Normal appearance with no obvious deformation
2. Electrical inspection - The antenna satisfies the VSWR specification throughout the 2.4-2.5 GHz band
3. Mechanical inspection - Acceptable contact force min. 0.5 N

12 Hazardous Material Regulation Conformance

Cadmium and cadmium compound.
Organic brominated compound (PBB, PBDE)
Polychlorinated biphenyl (PCB)
Polychlorinated naphthalene (PCN)
Organic tin compound
Asbestos
Azo compound
Lead and lead compound
Mercury and mercury compound
Sexivalent chrome compound
Chlorinated paraffin (CP)
Mirex
Formaldehyde
Tetra-bromo-bisphenol-A-bis (TBBP-A-bis)

13 Application example

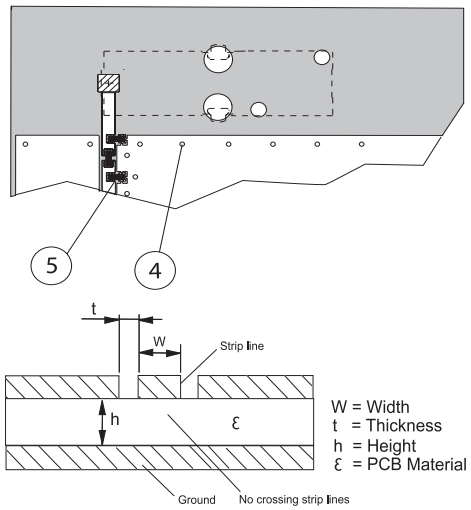

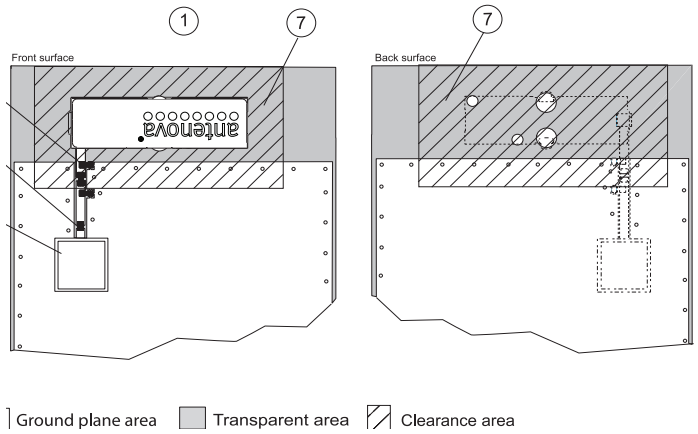

Fig. 1

1. **Placement of antenna**
   The antenna shall preferably be placed at the edge of the PCB oriented as above. Other placements and orientations and size of groundplanes are possible, but will affect the performance. Avoid active components near the antenna.
2. **Placement of 2.4 GHz module**
   To avoid losses the module shall be placed as close to the antenna as possible.
3. **Strip line**
   The strip line must be dimensioned according to your specific PCB. (see fig 1). No crossing strip lines are allowed between the strip line and its ground plane.
4. **Via connections**
   To avoid spurious effects, via connections must be made to analogue ground.
5. **Component matching**
   Component values are depending on antenna placement, PCB dimensions and location of other components.
6. **DC Block**
   Might be needed depending on RF Module configuration.
7. **Clearance area**
   Avoid components and parts close to the antenna.

Note ! Incorrect implementation of the antenna will affect the performance.
Contact Antenova for implementation services.

14 Packaging

14.1 Shelf storage recommendation

Temperature	-10 to +40 degree C
Humidity	Less than 75% RH
Shelf Life	12 Months
Storage place	Away from corrosive gas and direct sunlight

14.2 Packaging characteristics

Quantity	Number of trays	Tray quantity
840 pcs / box	6 / box	140 pcs

14.3 Tray dimension

Material: Anti static plastic tray

Width [mm] W: 290

Breadth [mm] B: 390

Height [mm] H: 14

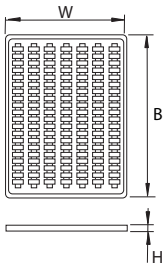

14.4 Box dimension

Material: Paper

Width [mm] W: 296

Breadth [mm] B: 396

Height [mm] H: 75

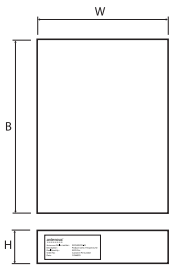

14.5 Label information

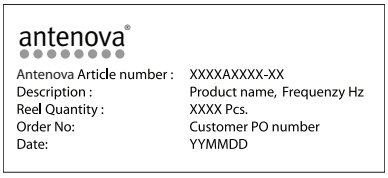

www.antenova.com

Corporate Headquarters

Antenova Ltd.
Far Field House
Albert Road
Stow-cum-Quy
Cambridge
CB9 5AR

Tel: +44 (0) 1223 810600
Fax: +44 (0) 1223 810650
Email: info@antenova.com

Asia Headquarters

Antenova Asia Ltd.
3F, No 10, Alley 6, Lane 45
Poa Shing Road
Hsin Tien City
Taipe County
ROC 23145

Tel: +886 (0) 2 2917 6536
Fax: +886 (0) 2 2910 6546
Email: info@antenova.com

Sales Offices

Europe
Charlotta Olander
UK/EU Sales Manager

Tel: +46 702 913731
Email: Lotta.Olander@antenova.com

America
David Nuti
NA Sales Manager

Tel: +1 214 668 0357
Email: David.Nuti@antenova.com

Asia
CL Lim
VP Sales Asia

Tel: +886 (0) 931 201 318
Email: CL.Lim@antenova.com

ISOQAR QUALITY ASSURED ISO 9001
UKAS QUALITY MANAGEMENT 026
Certificate No: 4598/04

Integrated Antenna Solutions

Общество с ограниченной ответственностью «МосЧип» ИНН 7719860671 / КПП 771901001
Адрес: 105318, г.Москва, ул.Щербаковская д.3, офис 1107

Данный компонент на территории Российской Федерации

Вы можете приобрести в компании MosChip.

Для оперативного оформления запроса Вам необходимо перейти по данной ссылке:

http://moschip.ru/get-element

Вы можете разместить у нас заказ для любого Вашего проекта, будь то серийное производство или разработка единичного прибора.

В нашем ассортименте представлены ведущие мировые производители активных и пассивных электронных компонентов.

Нашей специализацией является поставка электронной компонентной базы двойного назначения, продукции таких производителей как XILINX, Intel (ex.ALTERA), Vicor, Microchip, Texas Instruments, Analog Devices, Mini-Circuits, Amphenol, Glenair.

Сотрудничество с глобальными дистрибьюторами электронных компонентов, предоставляет возможность заказывать и получать с международных складов практически любой перечень компонентов в оптимальные для Вас сроки.

На всех этапах разработки и производства наши партнеры могут получить квалифицированную поддержку опытных инженеров.

Система менеджмента качества компании отвечает требованиям в соответствии с ГОСТ Р ИСО 9001, ГОСТ РВ 0015-002 и ЭС РД 009

Офис по работе с юридическими лицами:

105318, г.Москва, ул.Щербаковская д.3, офис 1107, 1118, ДЦ «Щербаковский»

Телефон: +7 495 668-12-70 (многоканальный)

Факс: +7 495 668-12-70 (доб.304)

E-mail: info@moschip.ru

Skype отдела продаж:
moschip.ru
moschip.ru_4
moschip.ru_6
moschip.ru_9