PIC32MX1XX/2XX 28/36/44-PIN

32-bit Microcontrollers (up to 256 KB Flash and 64 KB SRAM) with Audio and Graphics Interfaces, USB, and Advanced Analog

Operating Conditions

- 2.3V to 3.6V, -40ºC to +105ºC, DC to 40 MHz
- 2.3V to 3.6V, -40ºC to +85ºC, DC to 50 MHz

Core: 50 MHz/83 DMIPS MIPS32® M4K®

- MIPS16e® mode for up to 40% smaller code size
- Code-efficient (C and Assembly) architecture
- Single-cycle (MAC) 32x16 and two-cycle 32x32 multiply

Clock Management

- 0.9% internal oscillator
- Programmable PLLs and oscillator clock sources
- Fail-Safe Clock Monitor (FSCM)
- Independent Watchdog Timer
- Fast wake-up and start-up

Power Management

- Low-power management modes (Sleep and Idle)
- Integrated Power-on Reset and Brown-out Reset
- 0.5 mA/MHz dynamic current (typical)
- 44 µA IPD current (typical)

Audio Interface Features

- Data communication: I^2S, LJ, RJ, and DSP modes
- Control interface: SPI and I^2C
- Master clock:
  - Generation of fractional clock frequencies
  - Can be synchronized with USB clock
  - Can be tuned in run-time

Advanced Analog Features

- ADC Module:
  - 10-bit 1.1 Msps rate with one S&H
  - Up to 10 analog inputs on 28-pin devices and 13 analog inputs on 44-pin devices
- Flexible and independent ADC trigger sources
- Charge Time Measurement Unit (CTMU):
  - Supports mTouch™ capacitive touch sensing
  - Provides high-resolution time measurement (1 ns)
  - On-chip temperature measurement capability
- Comparators:
  - Up to three Analog Comparator modules
  - Programmable references with 32 voltage points

Timers/Output Compare/Input Capture

- Five General Purpose Timers:
  - Five 16-bit and up to two 32-bit Timers/Counters
- Five Output Compare (OC) modules
- Five Input Capture (IC) modules
- Peripheral Pin Select (PPS) to allow function remap
- Real-Time Clock and Calendar (RTCC) module

Communication Interfaces

- USB 2.0-compliant Full-speed OTG controller
- Two UART modules (12.5 Mbps):
  - Supports LIN 2.0 protocols and IrDA® support
- Two 4-wire SPI modules (25 Mbps)
- Two I^2C modules (up to 1 Mbaud) with SMBus support
- PPS to allow function remap
- Parallel Master Port (PMP)

Direct Memory Access (DMA)

- Four channels of hardware DMA with automatic data size detection
- Two additional channels dedicated for USB
- Programmable Cyclic Redundancy Check (CRC)

Input/Output

- 10 mA source/sink on all I/O pins and up to 14 mA on non-standard VOH
- 5V-tolerant pins
- Selectable open drain, pull-ups, and pull-downs
- External interrupts on all I/O pins

Qualification and Class B Support

- AEC-Q100 REVG (Grade 2 -40ºC to +105ºC) planned
- Class B Safety Library, IEC 60730

Debugger Development Support

- In-circuit and in-application programming
- 4-wire MIPS® Enhanced JTAG interface
- Unlimited program and six complex data breakpoints
- IEEE 1149.2-compatible (JTAG) boundary scan

Packages

Type	SOIC	SSOP	SPDIP	QFN		VTLA		TQFP
Pin Count	28	28	28	28	44	36	44	44
I/O Pins (up to)	21	21	21	21	34	25	34	34
Contact/Lead Pitch	1.27	0.65	0.100"	0.65	0.65	0.50	0.50	0.80
Dimensions	17.90x7.50x2.65	10.2x5.3x2	1.365"x.285"x.135"	6x6x0.9	8x8x0.9	5x5x0.9	6x6x0.9	10x10x1

Note: All dimensions are in millimeters (mm) unless specified.

© 2011-2016 Microchip Technology Inc.

TABLE 1: PIC32MX1XX 28/36/44-PIN GENERAL PURPOSE FAMILY FEATURES

Device	Pins	Program Memory (KB)(1)	Data Memory (KB)	Remappable Peripherals					Analog Comparators	USB On-The-Go (OTG)	I²C	PMP	DMA Channels (Programmable/Dedicated)	CTMU	10-bit 1 Msps ADC (Channels)	RTCC	I/O Pins	JTAG	Packages
				Remappable Pins	Timers(2)/Capture/Compare	UART	SPI/I²S	External Interrupts(3)											
PIC32MX110F016B	28	16+3	4	20	5/5/5	2	2	5	3	N	2	Y	4/0	Y	10	Y	21	Y	SOIC, SSOP, SPDIP, QFN
PIC32MX110F016C	36	16+3	4	24	5/5/5	2	2	5	3	N	2	Y	4/0	Y	12	Y	25	Y	VTLA
PIC32MX110F016D	44	16+3	4	32	5/5/5	2	2	5	3	N	2	Y	4/0	Y	13	Y	35	Y	VTLA, TQFP, QFN
PIC32MX120F032B	28	32+3	8	20	5/5/5	2	2	5	3	N	2	Y	4/0	Y	10	Y	21	Y	SOIC, SSOP, SPDIP, QFN
PIC32MX120F032C	36	32+3	8	24	5/5/5	2	2	5	3	N	2	Y	4/0	Y	12	Y	25	Y	VTLA
PIC32MX120F032D	44	32+3	8	32	5/5/5	2	2	5	3	N	2	Y	4/0	Y	13	Y	35	Y	VTLA, TQFP, QFN
PIC32MX130F064B	28	64+3	16	20	5/5/5	2	2	5	3	N	2	Y	4/0	Y	10	Y	21	Y	SOIC, SSOP, SPDIP, QFN
PIC32MX130F064C	36	64+3	16	24	5/5/5	2	2	5	3	N	2	Y	4/0	Y	12	Y	25	Y	VTLA
PIC32MX130F064D	44	64+3	16	32	5/5/5	2	2	5	3	N	2	Y	4/0	Y	13	Y	35	Y	VTLA, TQFP, QFN
PIC32MX150F128B	28	128+3	32	20	5/5/5	2	2	5	3	N	2	Y	4/0	Y	10	Y	21	Y	SOIC, SSOP, SPDIP, QFN
PIC32MX150F128C	36	128+3	32	24	5/5/5	2	2	5	3	N	2	Y	4/0	Y	12	Y	25	Y	VTLA
PIC32MX150F128D	44	128+3	32	32	5/5/5	2	2	5	3	N	2	Y	4/0	Y	13	Y	35	Y	VTLA, TQFP, QFN
PIC32MX130F256B	28	256+3	16	20	5/5/5	2	2	5	3	N	2	Y	4/0	Y	10	Y	21	Y	SOIC, SSOP, SPDIP, QFN
PIC32MX130F256D	44	256+3	16	32	5/5/5	2	2	5	3	N	2	Y	4/0	Y	13	Y	35	Y	VTLA, TQFP, QFN
PIC32MX170F256B	28	256+3	64	20	5/5/5	2	2	5	3	N	2	Y	4/0	Y	10	Y	21	Y	SOIC, SSOP, SPDIP, QFN
PIC32MX170F256D	44	256+3	64	32	5/5/5	2	2	5	3	N	2	Y	4/0	Y	13	Y	35	Y	VTLA, TQFP, QFN

Note 1: This device features 3 KB of boot Flash memory.
2: Four out of five timers are remappable.
3: Four out of five external interrupts are remappable.

© 2011-2016 Microchip Technology Inc.

TABLE 2: PIC32MX2XX 28/36/44-PIN USB FAMILY FEATURES

Device	Pins	Program Memory (KB)(1)	Data Memory (KB)	Remappable Peripherals					Analog Comparators	USB On-The-Go (OTG)	I²C	PMP	DMA Channels (Programmable/Dedicated)	CTMU	10-bit 1 Msps ADC (Channels)	RTCC	I/O Pins	JTAG	Packages
				Remappable Pins	Timers(2)/Capture/Compare	UART	SPI/I²S	External Interrupts(3)											
PIC32MX210F016B	28	16+3	4	19	5/5/5	2	2	5	3	Y	2	Y	4/2	Y	9	Y	19	Y	SOIC, SSOP, SPDIP, QFN
PIC32MX210F016C	36	16+3	4	23	5/5/5	2	2	5	3	Y	2	Y	4/2	Y	12	Y	25	Y	VTLA
PIC32MX210F016D	44	16+3	4	31	5/5/5	2	2	5	3	Y	2	Y	4/2	Y	13	Y	33	Y	VTLA, TQFP, QFN
PIC32MX220F032B	28	32+3	8	19	5/5/5	2	2	5	3	Y	2	Y	4/2	Y	9	Y	19	Y	SOIC, SSOP, SPDIP, QFN
PIC32MX220F032C	36	32+3	8	23	5/5/5	2	2	5	3	Y	2	Y	4/2	Y	12	Y	23	Y	VTLA
PIC32MX220F032D	44	32+3	8	31	5/5/5	2	2	5	3	Y	2	Y	4/2	Y	13	Y	33	Y	VTLA, TQFP, QFN
PIC32MX230F064B	28	64+3	16	19	5/5/5	2	2	5	3	Y	2	Y	4/2	Y	9	Y	19	Y	SOIC, SSOP, SPDIP, QFN
PIC32MX230F064C	36	64+3	16	23	5/5/5	2	2	5	3	Y	2	Y	4/2	Y	12	Y	23	Y	VTLA
PIC32MX230F064D	44	64+3	16	31	5/5/5	2	2	5	3	Y	2	Y	4/2	Y	13	Y	33	Y	VTLA, TQFP, QFN
PIC32MX250F128B	28	128+3	32	19	5/5/5	2	2	5	3	Y	2	Y	4/2	Y	9	Y	19	Y	SOIC, SSOP, SPDIP, QFN
PIC32MX250F128C	36	128+3	32	23	5/5/5	2	2	5	3	Y	2	Y	4/2	Y	12	Y	23	Y	VTLA
PIC32MX250F128D	44	128+3	32	31	5/5/5	2	2	5	3	Y	2	Y	4/2	Y	13	Y	33	Y	VTLA, TQFP, QFN
PIC32MX230F256B	28	256+3	16	20	5/5/5	2	2	5	3	Y	2	Y	4/2	Y	9	Y	19	Y	SOIC, SSOP, SPDIP, QFN
PIC32MX230F256D	44	256+3	16	31	5/5/5	2	2	5	3	Y	2	Y	4/2	Y	13	Y	33	Y	VTLA, TQFP, QFN
PIC32MX270F256B	28	256+3	64	19	5/5/5	2	2	5	3	Y	2	Y	4/2	Y	9	Y	19	Y	SOIC, SSOP, SPDIP, QFN
PIC32MX270F256D	44	256+3	64	31	5/5/5	2	2	5	3	Y	2	Y	4/2	Y	13	Y	33	Y	VTLA, TQFP, QFN
PIC32MX270F256DB(4)	44	256+3	64	31	5/5/5	2	2	5	3	Y	2	Y	4/2	Y	13	Y	33	Y	VTLA, TQFP, QFN

Note 1: This device features 3 KB of boot Flash memory.

2: Four out of five timers are remappable.

3: Four out of five external interrupts are remappable.

4: This PIC32 device is targeted to specific audio software packages that are tracked for licensing royalty purposes. All peripherals and electrical characteristics are identical to their corresponding base part numbers.

Pin Diagrams

TABLE 3: PIN NAMES FOR 28-PIN GENERAL PURPOSE DEVICES

28-PIN SOIC, SPDIP, SSOP (TOP VIEW)(1,2,3)

PIC32MX110F016B
PIC32MX120F032B
PIC32MX130F064B
PIC32MX130F256B
PIC32MX150F128B
PIC32MX170F256B

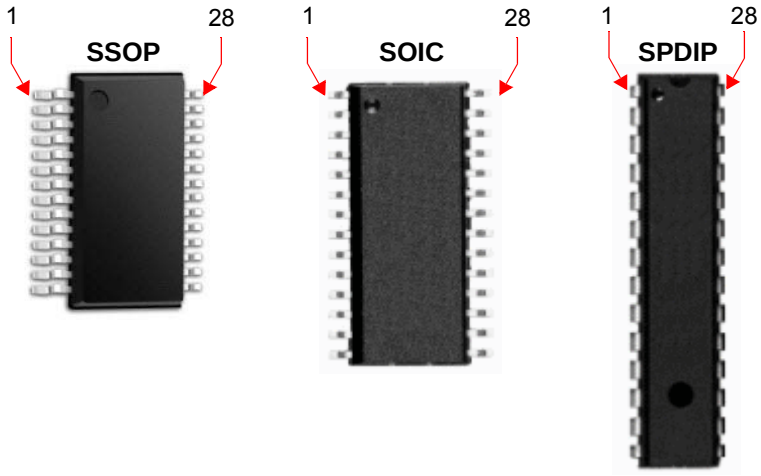

Pin #	Full Pin Name	Pin #	Full Pin Name
1	$\overline{\text{MCLR}}$	15	PGEC3/RPB6/PMD6/RB6
2	VREF+/CVREF+/AN0/C3INC/RPA0/CTED1/RA0	16	TDI/RPB7/CTED3/PMD5/INT0/RB7
3	VREF-/CVREF-/AN1/RPA1/CTED2/RA1	17	TCK/RPB8/SCL1/CTED10/PMD4/RB8
4	PGED1/AN2/C1IND/C2INB/C3IND/RPB0/RB0	18	TDO/RPB9/SDA1/CTED4/PMD3/RB9
5	PGEC1/AN3/C1INC/C2INA/RPB1/CTED12/RB1	19	VSS
6	AN4/C1INB/C2IND/RPB2/SDA2/CTED13/RB2	20	VCAP
7	AN5/C1INA/C2INC/RTCC/RPB3/SCL2/RB3	21	PGED2/RPB10/CTED11/PMD2/RB10
8	VSS	22	PGEC2/TMS/RPB11/PMD1/RB11
9	OSC1/CLKI/RPA2/RA2	23	AN12/PMD0/RB12
10	OSC2/CLKO/RPA3/PMA0/RA3	24	AN11/RPB13/CTPLS/PMRD/RB13
11	SOSCI/RPB4/RB4	25	CVREFOUT/AN10/C3INB/RPB14/SCK1/CTED5/PMWR/RB14
12	SOSCO/RPA4/T1CK/CTED9/PMA1/RA4	26	AN9/C3INA/RPB15/SCK2/CTED6/PMCS1/RB15
13	VDD	27	AVSS
14	PGED3/RPB5/PMD7/RB5	28	AVDD

Note 1: The RPn pins can be used by remappable peripherals. See Table 1 for the available peripherals and **Section 11.3 "Peripheral Pin Select"** for restrictions.
2: Every I/O port pin (RAx-RCx) can be used as a change notification pin (CNAx-CNCx). See **Section 11.0 "I/O Ports"** for more information.
3: Shaded pins are 5V tolerant.

© 2011-2016 Microchip Technology Inc.

TABLE 4: PIN NAMES FOR 28-PIN USB DEVICES

28-PIN SOIC, SPDIP, SSOP (TOP VIEW)(1,2,3)

PIC32MX210F016B
PIC32MX220F032B
PIC32MX230F064B
PIC32MX230F256B
PIC32MX250F128B
PIC32MX270F256B

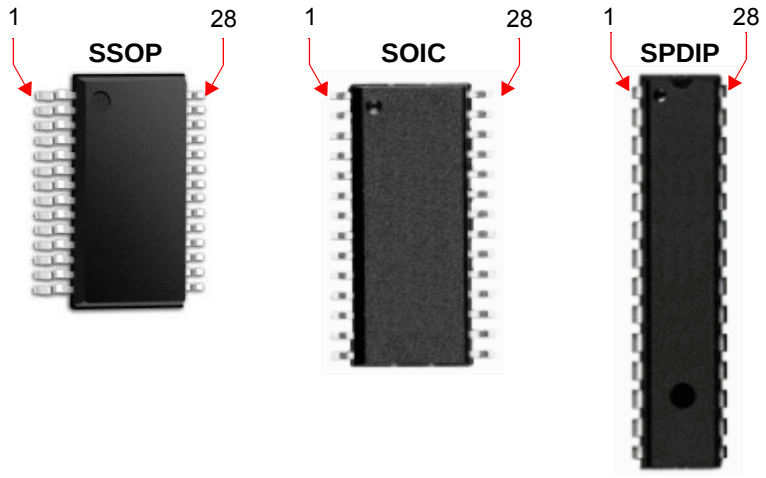

Pin #	Full Pin Name	Pin #	Full Pin Name
1	$\overline{\text{MCLR}}$	15	VBUS
2	PGED3/VREF+/CVREF+/AN0/C3INC/RPA0/CTED1/PMD7/RA0	16	TDI/RPB7/CTED3/PMD5/INT0/RB7
3	PGEC3/VREF-/CVREF-/AN1/RPA1/CTED2/PMD6/RA1	17	TCK/RPB8/SCL1/CTED10/PMD4/RB8
4	PGED1/AN2/C1IND/C2INB/C3IND/RPB0/PMD0/RB0	18	TDO/RPB9/SDA1/CTED4/PMD3/RB9
5	PGEC1/AN3/C1INC/C2INA/RPB1/CTED12/PMD1/RB1	19	VSS
6	AN4/C1INB/C2IND/RPB2/SDA2/CTED13/PMD2/RB2	20	VCAP
7	AN5/C1INA/C2INC/RTCC/RPB3/SCL2/PMWR/RB3	21	PGED2/RPB10/D+/CTED11/RB10
8	VSS	22	PGEC2/RPB11/D-/RB11
9	OSC1/CLKI/RPA2/RA2	23	VUSB3V3
10	OSC2/CLKO/RPA3/PMA0/RA3	24	AN11/RPB13/CTPLS/PMRD/RB13
11	SOSCI/RPB4/RB4	25	CVREFOUT/AN10/C3INB/RPB14/VBUSON/SCK1/CTED5/RB14
12	SOSCO/RPA4/T1CK/CTED9/PMA1/RA4	26	AN9/C3INA/RPB15/SCK2/CTED6/PMCS1/RB15
13	VDD	27	AVSS
14	TMS/RPB5/USBID/RB5	28	AVDD

Note 1: The RPn pins can be used by remappable peripherals. See Table 1 for the available peripherals and **Section 11.3 "Peripheral Pin Select"** for restrictions.

2: Every I/O port pin (RAx-RCx) can be used as a change notification pin (CNAx-CNCx). See **Section 11.0 "I/O Ports"** for more information.

3: Shaded pins are 5V tolerant.

TABLE 5: PIN NAMES FOR 28-PIN GENERAL PURPOSE DEVICES

28-PIN QFN (TOP VIEW)(1,2,3.4)

PIC32MX110F016B
PIC32MX120F032B
PIC32MX130F064B
PIC32MX130F256B
PIC32MX150F128B
PIC32MX170F256B

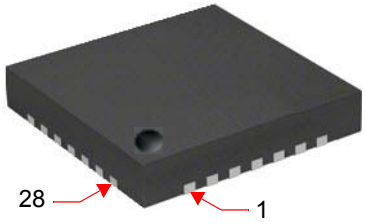

Pin #	Full Pin Name	Pin #	Full Pin Name
1	PGED1/AN2/C1IND/C2INB/C3IND/RPB0/RB0	15	TDO/RPB9/SDA1/CTED4/PMD3/RB9
2	PGEC1/AN3/C1INC/C2INA/RPB1/CTED12/RB1	16	VSS
3	AN4/C1INB/C2IND/RPB2/SDA2/CTED13/RB2	17	VCAP
4	AN5/C1INA/C2INC/RTCC/RPB3/SCL2/RB3	18	PGED2/RPB10/CTED11/PMD2/RB10
5	VSS	19	PGEC2/TMS/RPB11/PMD1/RB11
6	OSC1/CLKI/RPA2/RA2	20	AN12/PMD0/RB12
7	OSC2/CLKO/RPA3/PMA0/RA3	21	AN11/RPB13/CTPLS/PMRD/RB13
8	SOSCI/RPB4/RB4	22	CVREFOUT/AN10/C3INB/RPB14/SCK1/CTED5/PMWR/RB14
9	SOSCO/RPA4/T1CK/CTED9/PMA1/RA4	23	AN9/C3INA/RPB15/SCK2/CTED6/PMCS1/RB15
10	VDD	24	AVSS
11	PGED3/RPB5/PMD7/RB5	25	AVDD
12	PGEC3/RPB6/PMD6/RB6	26	$\overline{\text{MCLR}}$
13	TDI/RPB7/CTED3/PMD5/INT0/RB7	27	VREF+/CVREF+/AN0/C3INC/RPA0/CTED1/RA0
14	TCK/RPB8/SCL1/CTED10/PMD4/RB8	28	VREF-/CVREF-/AN1/RPA1/CTED2/RA1

Note 1: The RPn pins can be used by remappable peripherals. See Table 1 for the available peripherals and **Section 11.3 "Peripheral Pin Select"** for restrictions.
2: Every I/O port pin (RAx-RCx) can be used as a change notification pin (CNAx-CNCx). See **Section 11.0 "I/O Ports"** for more information.
3: The metal plane at the bottom of the device is not connected to any pins and is recommended to be connected to VSS externally.
4: Shaded pins are 5V tolerant.

© 2011-2016 Microchip Technology Inc.

TABLE 6: PIN NAMES FOR 28-PIN USB DEVICES

28-PIN QFN (TOP VIEW)(1,2,3,4)

PIC32MX210F016B
PIC32MX220F032B
PIC32MX230F064B
PIC32MX230F256B
PIC32MX250F128B
PIC32MX270F256B

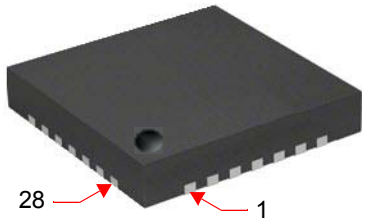

Pin #	Full Pin Name	Pin #	Full Pin Name
1	PGED1/AN2/C1IND/C2INB/C3IND/RPB0/PMD0/RB0	15	TDO/RPB9/SDA1/CTED4/PMD3/RB9
2	PGEC1/AN3/C1INC/C2INA/RPB1/CTED12/PMD1/RB1	16	VSS
3	AN4/C1INB/C2IND/RPB2/SDA2/CTED13/PMD2/RB2	17	VCAP
4	AN5/C1INA/C2INC/RTCC/RPB3/SCL2/PMWR/RB3	18	PGED2/RPB10/D+/CTED11/RB10
5	VSS	19	PGEC2/RPB11/D-/RB11
6	OSC1/CLKI/RPA2/RA2	20	VUSB3V3
7	OSC2/CLKO/RPA3/PMA0/RA3	21	AN11/RPB13/CTPLS/PMRD/RB13
8	SOSCI/RPB4/RB4	22	CVREFOUT/AN10/C3INB/RPB14/VBUSON/SCK1/CTED5/RB14
9	SOSCO/RPA4/T1CK/CTED9/PMA1/RA4	23	AN9/C3INA/RPB15/SCK2/CTED6/PMCS1/RB15
10	VDD	24	AVSS
11	TMS/RPB5/USBID/RB5	25	AVDD
12	VBUS	26	$\overline{\text{MCLR}}$
13	TDI/RPB7/CTED3/PMD5/INT0/RB7	27	PGED3/VREF+/CVREF+/AN0/C3INC/RPA0/CTED1/PMD7/RA0
14	TCK/RPB8/SCL1/CTED10/PMD4/RB8	28	PGEC3/VREF-/CVREF-/AN1/RPA1/CTED2/PMD6/RA1

Note 1: The RPn pins can be used by remappable peripherals. See Table 1 for the available peripherals and **Section 11.3 "Peripheral Pin Select"** for restrictions.
2: Every I/O port pin (RAx-RCx) can be used as a change notification pin (CNAx-CNCx). See **Section 11.0 "I/O Ports"** for more information.
3: The metal plane at the bottom of the device is not connected to any pins and is recommended to be connected to VSS externally.
4: Shaded pins are 5V tolerant.

TABLE 7: PIN NAMES FOR 36-PIN GENERAL PURPOSE DEVICES

36-PIN VTLA (TOP VIEW)(1,2,3,5)

PIC32MX110F016C
PIC32MX120F032C
PIC32MX130F064C
PIC32MX150F128C

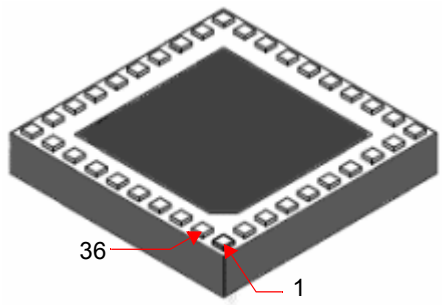

Pin #	Full Pin Name	Pin #	Full Pin Name
1	AN4/C1INB/C2IND/RPB2/SDA2/CTED13/RB2	19	TDO/RPB9/SDA1/CTED4/PMD3/RB9
2	AN5/C1INA/C2INC/RTCC/RPB3/SCL2/RB3	20	RPC9/CTED7/RC9
3	PGED4(4)/AN6/RPC0/RC0	21	VSS
4	PGEC4(4)/AN7/RPC1/RC1	22	VCAP
5	VDD	23	VDD
6	VSS	24	PGED2/RPB10/CTED11/PMD2/RB10
7	OSC1/CLKI/RPA2/RA2	25	PGEC2/TMS/RPB11/PMD1/RB11
8	OSC2/CLKO/RPA3/PMA0/RA3	26	AN12/PMD0/RB12
9	SOSCI/RPB4/RB4	27	AN11/RPB13/CTPLS/PMRD/RB13
10	SOSCO/RPA4/T1CK/CTED9/PMA1/RA4	28	CVREFOUT/AN10/C3INB/RPB14/SCK1/CTED5/PMWR/RB14
11	RPC3/RC3	29	AN9/C3INA/RPB15/SCK2/CTED6/PMCS1/RB15
12	VSS	30	AVSS
13	VDD	31	AVDD
14	VDD	32	$\overline{\text{MCLR}}$
15	PGED3/RPB5/PMD7/RB5	33	VREF+/CVREF+/AN0/C3INC/RPA0/CTED1/RA0
16	PGEC3/RPB6/PMD6/RB6	34	VREF-/CVREF-/AN1/RPA1/CTED2/RA1
17	TDI/RPB7/CTED3/PMD5/INT0/RB7	35	PGED1/AN2/C1IND/C2INB/C3IND/RPB0/RB0
18	TCK/RPB8/SCL1/CTED10/PMD4/RB8	36	PGEC1/AN3/C1INC/C2INA/RPB1/CTED12/RB1

Note 1: The RPn pins can be used by remappable peripherals. See Table 1 for the available peripherals and **Section 11.3 "Peripheral Pin Select"** for restrictions.
2: Every I/O port pin (RAx-RCx) can be used as a change notification pin (CNAx-CNCx). See **Section 11.0 "I/O Ports"** for more information.
3: The metal plane at the bottom of the device is not connected to any pins and is recommended to be connected to VSS externally.
4: This pin function is not available on PIC32MX110F016C and PIC32MX120F032C devices.
5: Shaded pins are 5V tolerant.

© 2011-2016 Microchip Technology Inc.

TABLE 8: PIN NAMES FOR 36-PIN USB DEVICES

36-PIN VTLA (TOP VIEW)(1,2,3,5)

PIC32MX210F016C
PIC32MX220F032C
PIC32MX230F064C
PIC32MX250F128C

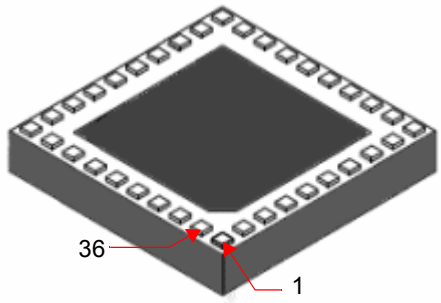

Pin #	Full Pin Name	Pin #	Full Pin Name
1	AN4/C1INB/C2IND/RPB2/SDA2/CTED13/PMD2/RB2	19	TDO/RPB9/SDA1/CTED4/PMD3/RB9
2	AN5/C1INA/C2INC/RTCC/RPB3/SCL2/PMWR/RB3	20	RPC9/CTED7/RC9
3	PGED4(4)/AN6/RPC0/RC0	21	VSS
4	PGEC4(4)/AN7/RPC1/RC1	22	VCAP
5	VDD	23	VDD
6	VSS	24	PGED2/RPB10/D+/CTED11/RB10
7	OSC1/CLKI/RPA2/RA2	25	PGEC2/RPB11/D-/RB11
8	OSC2/CLKO/RPA3/PMA0/RA3	26	VUSB3V3
9	SOSCI/RPB4/RB4	27	AN11/RPB13/CTPLS/PMRD/RB13
10	SOSCO/RPA4/T1CK/CTED9/PMA1/RA4	28	CVREFOUT/AN10/C3INB/RPB14/VBUSON/SCK1/CTED5/RB14
11	AN12/RPC3/RC3	29	AN9/C3INA/RPB15/SCK2/CTED6/PMCS1/RB15
12	VSS	30	AVSS
13	VDD	31	AVDD
14	VDD	32	$\overline{\text{MCLR}}$
15	TMS/RPB5/USBID/RB5	33	PGED3/VREF+/CVREF+/AN0/C3INC/RPA0/CTED1/PMD7/RA0
16	VBUS	34	PGEC3/VREF-/CVREF-/AN1/RPA1/CTED2/PMD6/RA1
17	TDI/RPB7/CTED3/PMD5/INT0/RB7	35	PGED1/AN2/C1IND/C2INB/C3IND/RPB0/PMD0/RB0
18	TCK/RPB8/SCL1/CTED10/PMD4/RB8	36	PGEC1/AN3/C1INC/C2INA/RPB1/CTED12/PMD1/RB1

Note 1: The RPn pins can be used by remappable peripherals. See Table 1 for the available peripherals and **Section 11.3 "Peripheral Pin Select"** for restrictions.
2: Every I/O port pin (RAx-RCx) can be used as a change notification pin (CNAx-CNCx). See **Section 11.0 "I/O Ports"** for more information.
3: The metal plane at the bottom of the device is not connected to any pins and is recommended to be connected to VSS externally.
4: This pin function is not available on PIC32MX210F016C and PIC32MX120F032C devices.
5: Shaded pins are 5V tolerant.

TABLE 9: PIN NAMES FOR 44-PIN GENERAL PURPOSE DEVICES

44-PIN QFN (TOP VIEW)(1,2,3,5)

PIC32MX110F016D
PIC32MX120F032D
PIC32MX130F064D
PIC32MX130F256D
PIC32MX150F128D
PIC32MX170F256D

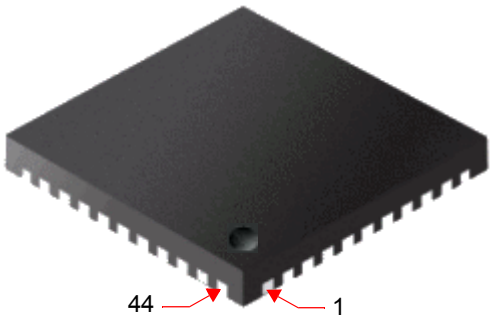

Pin #	Full Pin Name	Pin #	Full Pin Name
1	RPB9/SDA1/CTED4/PMD3/RB9	23	AN4/C1INB/C2IND/RPB2/SDA2/CTED13/RB2
2	RPC6/PMA1/RC6	24	AN5/C1INA/C2INC/RTCC/RPB3/SCL2/RB3
3	RPC7/PMA0/RC7	25	AN6/RPC0/RC0
4	RPC8/PMA5/RC8	26	AN7/RPC1/RC1
5	RPC9/CTED7/PMA6/RC9	27	AN8/RPC2/PMA2/RC2
6	VSS	28	VDD
7	VCAP	29	VSS
8	PGED2/RPB10/CTED11/PMD2/RB10	30	OSC1/CLKI/RPA2/RA2
9	PGEC2/RPB11/PMD1/RB11	31	OSC2/CLKO/RPA3/RA3
10	AN12/PMD0/RB12	32	TDO/RPA8/PMA8/RA8
11	AN11/RPB13/CTPLS/PMRD/RB13	33	SOSCI/RPB4/RB4
12	PGED4(4)/TMS/PMA10/RA10	34	SOSCO/RPA4/T1CK/CTED9/RA4
13	PGEC4(4)/TCK/CTED8/PMA7/RA7	35	TDI/RPA9/PMA9/RA9
14	CVREFOUT/AN10/C3INB/RPB14/SCK1/CTED5/PMWR/RB14	36	RPC3/RC3
15	AN9/C3INA/RPB15/SCK2/CTED6/PMCS1/RB15	37	RPC4/PMA4/RC4
16	AVSS	38	RPC5/PMA3/RC5
17	AVDD	39	VSS
18	$\overline{\text{MCLR}}$	40	VDD
19	VREF+/CVREF+/AN0/C3INC/RPA0/CTED1/RA0	41	PGED3/RPB5/PMD7/RB5
20	VREF-/CVREF-/AN1/RPA1/CTED2/RA1	42	PGEC3/RPB6/PMD6/RB6
21	PGED1/AN2/C1IND/C2INB/C3IND/RPB0/RB0	43	RPB7/CTED3/PMD5/INT0/RB7
22	PGEC1/AN3/C1INC/C2INA/RPB1/CTED12/RB1	44	RPB8/SCL1/CTED10/PMD4/RB8

Note 1: The RPn pins can be used by remappable peripherals. See Table 1 for the available peripherals and **Section 11.3 "Peripheral Pin Select"** for restrictions.
2: Every I/O port pin (RAx-RCx) can be used as a change notification pin (CNAx-CNCx). See **Section 11.0 "I/O Ports"** for more information.
3: The metal plane at the bottom of the device is not connected to any pins and is recommended to be connected to VSS externally.
4: This pin function is not available on PIC32MX110F016D and PIC32MX120F032D devices.
5: Shaded pins are 5V tolerant.

© 2011-2016 Microchip Technology Inc.

TABLE 10: PIN NAMES FOR 44-PIN USB DEVICES

44-PIN QFN (TOP VIEW)(1,2,3,5)

PIC32MX210F016D
PIC32MX220F032D
PIC32MX230F064D
PIC32MX230F256D
PIC32MX250F128D
PIC32MX270F256D

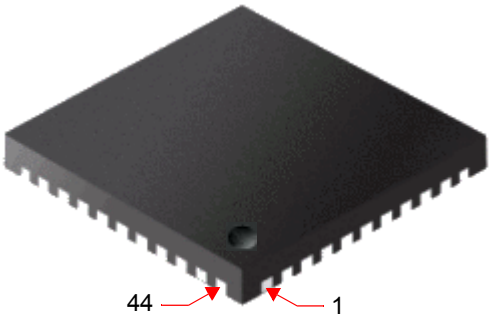

Pin #	Full Pin Name	Pin #	Full Pin Name
1	RPB9/SDA1/CTED4/PMD3/RB9	23	AN4/C1INB/C2IND/RPB2/SDA2/CTED13/PMD2/RB2
2	RPC6/PMA1/RC6	24	AN5/C1INA/C2INC/RTCC/RPB3/SCL2/PMWR/RB3
3	RPC7/PMA0/RC7	25	AN6/RPC0/RC0
4	RPC8/PMA5/RC8	26	AN7/RPC1/RC1
5	RPC9/CTED7/PMA6/RC9	27	AN8/RPC2/PMA2/RC2
6	V_{SS}	28	V_{DD}
7	V_{CAP}	29	V_{SS}
8	PGED2/RPB10/D+/CTED11/RB10	30	OSC1/CLKI/RPA2/RA2
9	PGEC2/RPB11/D-/RB11	31	OSC2/CLKO/RPA3/RA3
10	V_{USB3V3}	32	TDO/RPA8/PMA8/RA8
11	AN11/RPB13/CTPLS/PMRD/RB13	33	SOSCI/RPB4/RB4
12	PGED4/TMS/PMA10/RA10	34	SOSCO/RPA4/T1CK/CTED9/RA4
13	PGEC4/TCK/CTED8/PMA7/RA7	35	TDI/RPA9/PMA9/RA9
14	CV_{REFOUT}/AN10/C3INB/RPB14/V_{BUSON}/SCK1/CTED5/RB14	36	AN12/RPC3/RC3
15	AN9/C3INA/RPB15/SCK2/CTED6/PMCS1/RB15	37	RPC4/PMA4/RC4
16	AV_{SS}	38	RPC5/PMA3/RC5
17	AV_{DD}	39	V_{SS}
18	$\overline{MCLR}$	40	V_{DD}
19	PGED3/V_{REF}+/CV_{REF}+/AN0/C3INC/RPA0/CTED1/PMD7/RA0	41	RPB5/USBID/RB5
20	PGEC3/V_{REF}-/CV_{REF}-/AN1/RPA1/CTED2/PMD6/RA1	42	V_{BUS}
21	PGED1/AN2/C1IND/C2INB/C3IND/RPB0/PMD0/RB0	43	RPB7/CTED3/PMD5/INT0/RB7
22	PGEC1/AN3/C1INC/C2INA/RPB1/CTED12/PMD1/RB1	44	RPB8/SCL1/CTED10/PMD4/RB8

Note 1: The RPn pins can be used by remappable peripherals. See Table 1 for the available peripherals and **Section 11.3 "Peripheral Pin Select"** for restrictions.
2: Every I/O port pin (RAx-RCx) can be used as a change notification pin (CNAx-CNCx). See **Section 11.0 "I/O Ports"** for more information.
3: The metal plane at the bottom of the device is not connected to any pins and is recommended to be connected to V_{SS} externally.
4: This pin function is not available on PIC32MX110F016D and PIC32MX120F032D devices.
5: Shaded pins are 5V tolerant.

TABLE 11: PIN NAMES FOR 44-PIN GENERAL PURPOSE DEVICES

44-PIN TQFP (TOP VIEW)(1,2,3,5)

PIC32MX110F016D
PIC32MX120F032D
PIC32MX130F064D
PIC32MX130F256D
PIC32MX150F128D
PIC32MX170F256D

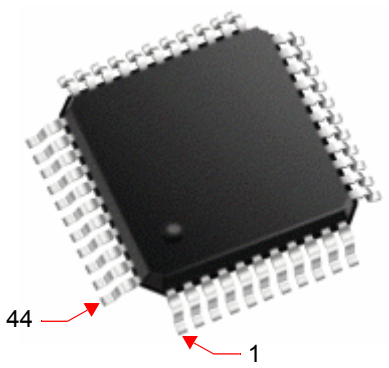

Pin #	Full Pin Name	Pin #	Full Pin Name
1	RPB9/SDA1/CTED4/PMD3/RB9	23	AN4/C1INB/C2IND/RPB2/SDA2/CTED13/RB2
2	RPC6/PMA1/RC6	24	AN5/C1INA/C2INC/RTCC/RPB3/SCL2/RB3
3	RPC7/PMA0/RC7	25	AN6/RPC0/RC0
4	RPC8/PMA5/RC8	26	AN7/RPC1/RC1
5	RPC9/CTED7/PMA6/RC9	27	AN8/RPC2/PMA2/RC2
6	VSS	28	VDD
7	VCAP	29	VSS
8	PGED2/RPB10/CTED11/PMD2/RB10	30	OSC1/CLKI/RPA2/RA2
9	PGEC2/RPB11/PMD1/RB11	31	OSC2/CLKO/RPA3/RA3
10	AN12/PMD0/RB12	32	TDO/RPA8/PMA8/RA8
11	AN11/RPB13/CTPLS/PMRD/RB13	33	SOSCI/RPB4/RB4
12	PGED4(4)/TMS/PMA10/RA10	34	SOSCO/RPA4/T1CK/CTED9/RA4
13	PGEC4(4)/TCK/CTED8/PMA7/RA7	35	TDI/RPA9/PMA9/RA9
14	CVREFOUT/AN10/C3INB/RPB14/SCK1/CTED5/PMWR/RB14	36	RPC3/RC3
15	AN9/C3INA/RPB15/SCK2/CTED6/PMCS1/RB15	37	RPC4/PMA4/RC4
16	AVSS	38	RPC5/PMA3/RC5
17	AVDD	39	VSS
18	$\overline{\text{MCLR}}$	40	VDD
19	VREF+/CVREF+/AN0/C3INC/RPA0/CTED1/RA0	41	PGED3/RPB5/PMD7/RB5
20	VREF-/CVREF-/AN1/RPA1/CTED2/RA1	42	PGEC3/RPB6/PMD6/RB6
21	PGED1/AN2/C1IND/C2INB/C3IND/RPB0/RB0	43	RPB7/CTED3/PMD5/INT0/RB7
22	PGEC1/AN3/C1INC/C2INA/RPB1/CTED12/RB1	44	RPB8/SCL1/CTED10/PMD4/RB8

Note 1: The RPn pins can be used by remappable peripherals. See Table 1 for the available peripherals and **Section 11.3 "Peripheral Pin Select"** for restrictions.
2: Every I/O port pin (RAx-RCx) can be used as a change notification pin (CNAx-CNCx). See **Section 11.0 "I/O Ports"** for more information.
3: The metal plane at the bottom of the device is not connected to any pins and is recommended to be connected to VSS externally.
4: This pin function is not available on PIC32MX110F016D and PIC32MX120F032D devices.
5: Shaded pins are 5V tolerant.

© 2011-2016 Microchip Technology Inc.

TABLE 12: PIN NAMES FOR 44-PIN USB DEVICES

44-PIN TQFP (TOP VIEW)(1,2,3,5)

PIC32MX210F016D
PIC32MX220F032D
PIC32MX230F064D
PIC32MX230F256D
PIC32MX250F128D
PIC32MX270F256D

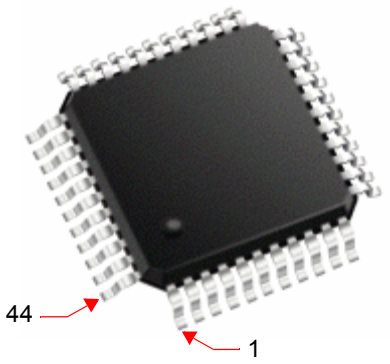

Pin #	Full Pin Name	Pin #	Full Pin Name
1	RPB9/SDA1/CTED4/PMD3/RB9	23	AN4/C1INB/C2IND/RPB2/SDA2/CTED13/PMD2/RB2
2	RPC6/PMA1/RC6	24	AN5/C1INA/C2INC/RTCC/RPB3/SCL2/PMWR/RB3
3	RPC7/PMA0/RC7	25	AN6/RPC0/RC0
4	RPC8/PMA5/RC8	26	AN7/RPC1/RC1
5	RPC9/CTED7/PMA6/RC9	27	AN8/RPC2/PMA2/RC2
6	V_{SS}	28	V_{DD}
7	V_{CAP}	29	V_{SS}
8	PGED2/RPB10/D+/CTED11/RB10	30	OSC1/CLKI/RPA2/RA2
9	PGEC2/RPB11/D-/RB11	31	OSC2/CLKO/RPA3/RA3
10	V_{USB3V3}	32	TDO/RPA8/PMA8/RA8
11	AN11/RPB13/CTPLS/PMRD/RB13	33	SOSCI/RPB4/RB4
12	PGED4(4)/TMS/PMA10/RA10	34	SOSCO/RPA4/T1CK/CTED9/RA4
13	PGEC4(4)/TCK/CTED8/PMA7/RA7	35	TDI/RPA9/PMA9/RA9
14	CV_{REFOUT}/AN10/C3INB/RPB14/V_{BUSON}/SCK1/CTED5/RB14	36	AN12/RPC3/RC3
15	AN9/C3INA/RPB15/SCK2/CTED6/PMCS1/RB15	37	RPC4/PMA4/RC4
16	AV_{SS}	38	RPC5/PMA3/RC5
17	AV_{DD}	39	V_{SS}
18	$\overline{MCLR}$	40	V_{DD}
19	PGED3/V_{REF}+/CV_{REF}+/AN0/C3INC/RPA0/CTED1/PMD7/RA0	41	RPB5/USBID/RB5
20	PGEC3/V_{REF}-/CV_{REF}-/AN1/RPA1/CTED2/PMD6/RA1	42	V_{BUS}
21	PGED1/AN2/C1IND/C2INB/C3IND/RPB0/PMD0/RB0	43	RPB7/CTED3/PMD5/INT0/RB7
22	PGEC1/AN3/C1INC/C2INA/RPB1/CTED12/PMD1/RB1	44	RPB8/SCL1/CTED10/PMD4/RB8

Note 1: The RPn pins can be used by remappable peripherals. See Table 1 for the available peripherals and **Section 11.3 "Peripheral Pin Select"** for restrictions.
2: Every I/O port pin (RAx-RCx) can be used as a change notification pin (CNAx-CNCx). See **Section 11.0 "I/O Ports"** for more information.
3: The metal plane at the bottom of the device is not connected to any pins and is recommended to be connected to V_{SS} externally.
4: This pin function is not available on PIC32MX210F016D and PIC32MX220F032D devices.
5: Shaded pins are 5V tolerant.

TABLE 13: PIN NAMES FOR 44-PIN GENERAL PURPOSE DEVICES

44-PIN VTLA (TOP VIEW)(1,2,3,5)

PIC32MX110F016D
PIC32MX120F032D
PIC32MX130F064D
PIC32MX130F256D
PIC32MX150F128D
PIC32MX170F256D

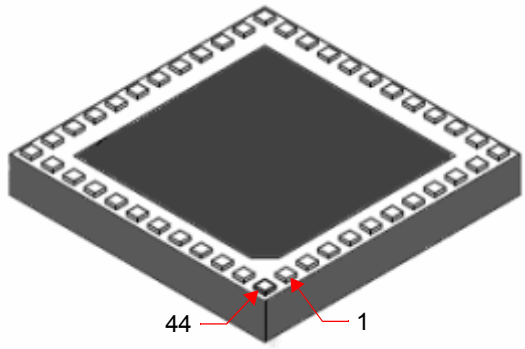

Pin #	Full Pin Name	Pin #	Full Pin Name
1	RPB9/SDA1/CTED4/PMD3/RB9	23	AN4/C1INB/C2IND/RPB2/SDA2/CTED13/RB2
2	RPC6/PMA1/RC6	24	AN5/C1INA/C2INC/RTCC/RPB3/SCL2/RB3
3	RPC7/PMA0/RC7	25	AN6/RPC0/RC0
4	RPC8/PMA5/RC8	26	AN7/RPC1/RC1
5	RPC9/CTED7/PMA6/RC9	27	AN8/RPC2/PMA2/RC2
6	VSS	28	VDD
7	VCAP	29	VSS
8	PGED2/RPB10/CTED11/PMD2/RB10	30	OSC1/CLKI/RPA2/RA2
9	PGEC2/RPB11/PMD1/RB11	31	OSC2/CLKO/RPA3/RA3
10	AN12/PMD0/RB12	32	TDO/RPA8/PMA8/RA8
11	AN11/RPB13/CTPLS/PMRD/RB13	33	SOSCI/RPB4/RB4
12	PGED4(4)/TMS/PMA10/RA10	34	SOSCO/RPA4/T1CK/CTED9/RA4
13	PGEC4(4)/TCK/CTED8/PMA7/RA7	35	TDI/RPA9/PMA9/RA9
14	CVREFOUT/AN10/C3INB/RPB14/SCK1/CTED5/PMWR/RB14	36	RPC3/RC3
15	AN9/C3INA/RPB15/SCK2/CTED6/PMCS1/RB15	37	RPC4/PMA4/RC4
16	AVSS	38	RPC5/PMA3/RC5
17	AVDD	39	VSS
18	$\overline{\text{MCLR}}$	40	VDD
19	VREF+/CVREF+/AN0/C3INC/RPA0/CTED1/RA0	41	PGED3/RPB5/PMD7/RB5
20	VREF-/CVREF-/AN1/RPA1/CTED2/RA1	42	PGEC3/RPB6/PMD6/RB6
21	PGED1/AN2/C1IND/C2INB/C3IND/RPB0/RB0	43	RPB7/CTED3/PMD5/INT0/RB7
22	PGEC1/AN3/C1INC/C2INA/RPB1/CTED12/RB1	44	RPB8/SCL1/CTED10/PMD4/RB8

Note 1: The RPn pins can be used by remappable peripherals. See Table 1 for the available peripherals and **Section 11.3 "Peripheral Pin Select"** for restrictions.
2: Every I/O port pin (RAx-RCx) can be used as a change notification pin (CNAx-CNCx). See **Section 11.0 "I/O Ports"** for more information.
3: The metal plane at the bottom of the device is not connected to any pins and is recommended to be connected to VSS externally.
4: This pin function is not available on PIC32MX110F016D and PIC32MX120F032D devices.
5: Shaded pins are 5V tolerant.

© 2011-2016 Microchip Technology Inc.

TABLE 14: PIN NAMES FOR 44-PIN USB DEVICES

44-PIN VTLA (TOP VIEW)(1,2,3,5)

PIC32MX210F016D
PIC32MX220F032D
PIC32MX230F064D
PIC32MX230F256D
PIC32MX250F128D
PIC32MX270F256D

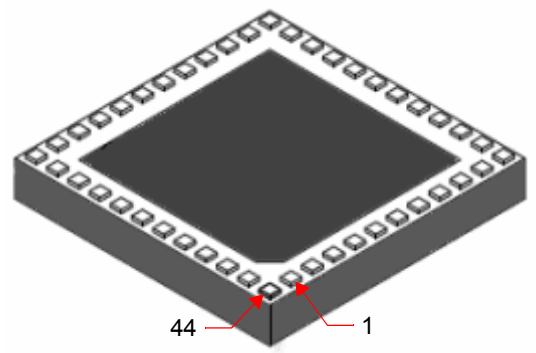

Pin #	Full Pin Name	Pin #	Full Pin Name
1	RPB9/SDA1/CTED4/PMD3/RB9	23	AN4/C1INB/C2IND/RPB2/SDA2/CTED13/PMD2/RB2
2	RPC6/PMA1/RC6	24	AN5/C1INA/C2INC/RTCC/RPB3/SCL2/PMWR/RB3
3	RPC7/PMA0/RC7	25	AN6/RPC0/RC0
4	RPC8/PMA5/RC8	26	AN7/RPC1/RC1
5	RPC9/CTED7/PMA6/RC9	27	AN8/RPC2/PMA2/RC2
6	V_{SS}	28	V_{DD}
7	V_{CAP}	29	V_{SS}
8	PGED2/RPB10/D+/CTED11/RB10	30	OSC1/CLKI/RPA2/RA2
9	PGEC2/RPB11/D-/RB11	31	OSC2/CLKO/RPA3/RA3
10	V_{USB3V3}	32	TDO/RPA8/PMA8/RA8
11	AN11/RPB13/CTPLS/PMRD/RB13	33	SOSCI/RPB4/RB4
12	PGED4(4)/TMS/PMA10/RA10	34	SOSCO/RPA4/T1CK/CTED9/RA4
13	PGEC4(4)/TCK/CTED8/PMA7/RA7	35	TDI/RPA9/PMA9/RA9
14	CV_{REFOUT}/AN10/C3INB/RPB14/V_{BUSON}/SCK1/CTED5/RB14	36	AN12/RPC3/RC3
15	AN9/C3INA/RPB15/SCK2/CTED6/PMCS1/RB15	37	RPC4/PMA4/RC4
16	AV_{SS}	38	RPC5/PMA3/RC5
17	AV_{DD}	39	V_{SS}
18	$\overline{MCLR}$	40	V_{DD}
19	PGED3/V_{REF}+/CV_{REF}+/AN0/C3INC/RPA0/CTED1/PMD7/RA0	41	RPB5/USBID/RB5
20	PGEC3/V_{REF}-/CV_{REF}-/AN1/RPA1/CTED2/PMD6/RA1	42	V_{BUS}
21	PGED1/AN2/C1IND/C2INB/C3IND/RPB0/PMD0/RB0	43	RPB7/CTED3/PMD5/INT0/RB7
22	PGEC1/AN3/C1INC/C2INA/RPB1/CTED12/PMD1/RB1	44	RPB8/SCL1/CTED10/PMD4/RB8

Note 1: The RPn pins can be used by remappable peripherals. See Table 1 for the available peripherals and **Section 11.3 "Peripheral Pin Select"** for restrictions.
2: Every I/O port pin (RAx-RCx) can be used as a change notification pin (CNAx-CNCx). See **Section 11.0 "I/O Ports"** for more information.
3: The metal plane at the bottom of the device is not connected to any pins and is recommended to be connected to V_{SS} externally.
4: This pin function is not available on PIC32MX210F016D and PIC32MX220F032D devices.
5: Shaded pins are 5V tolerant.

Table of Contents

1.0 Device Overview 19
2.0 Guidelines for Getting Started with 32-bit MCUs 27
3.0 CPU 33
4.0 Memory Organization 37
5.0 Flash Program Memory 53
6.0 Resets 59
7.0 Interrupt Controller 63
8.0 Oscillator Configuration 73
9.0 Direct Memory Access (DMA) Controller 83
10.0 USB On-The-Go (OTG) 103
11.0 I/O Ports 127
12.0 Timer1 143
13.0 Timer2/3, Timer4/5 147
14.0 Watchdog Timer (WDT) 153
15.0 Input Capture 157
16.0 Output Compare 161
17.0 Serial Peripheral Interface (SPI) 165
18.0 Inter-Integrated Circuit (I^2C) 173
19.0 Universal Asynchronous Receiver Transmitter (UART) 181
20.0 Parallel Master Port (PMP) 189
21.0 Real-Time Clock and Calendar (RTCC) 199
22.0 10-bit Analog-to-Digital Converter (ADC) 209
23.0 Comparator 219
24.0 Comparator Voltage Reference (CVREF) 223
25.0 Charge Time Measurement Unit (CTMU) 227
26.0 Power-Saving Features 233
27.0 Special Features 239
28.0 Instruction Set 251
29.0 Development Support 253
30.0 Electrical Characteristics 257
31.0 50 MHz Electrical Characteristics 301
32.0 DC and AC Device Characteristics Graphs 307
33.0 Packaging Information 311
The Microchip Web Site 341
Customer Change Notification Service 341
Customer Support 341
Product Identification System 342

© 2011-2016 Microchip Technology Inc.

TO OUR VALUED CUSTOMERS

It is our intention to provide our valued customers with the best documentation possible to ensure successful use of your Microchip products. To this end, we will continue to improve our publications to better suit your needs. Our publications will be refined and enhanced as new volumes and updates are introduced.

If you have any questions or comments regarding this publication, please contact the Marketing Communications Department via E-mail at **docerrors@microchip.com**. We welcome your feedback.

Most Current Data Sheet

To obtain the most up-to-date version of this data sheet, please register at our Worldwide Web site at:

http://www.microchip.com

You can determine the version of a data sheet by examining its literature number found on the bottom outside corner of any page. The last character of the literature number is the version number, (e.g., DS30000000A is version A of document DS30000000).

Errata

An errata sheet, describing minor operational differences from the data sheet and recommended workarounds, may exist for current devices. As device/documentation issues become known to us, we will publish an errata sheet. The errata will specify the revision of silicon and revision of document to which it applies.

To determine if an errata sheet exists for a particular device, please check with one of the following:

- Microchip's Worldwide Web site; **http://www.microchip.com**
- Your local Microchip sales office (see last page)

When contacting a sales office, please specify which device, revision of silicon and data sheet (include literature number) you are using.

Customer Notification System

Register on our web site at **www.microchip.com** to receive the most current information on all of our products.

Referenced Sources

This device data sheet is based on the following individual chapters of the *"PIC32 Family Reference Manual"*. These documents should be considered as the general reference for the operation of a particular module or device feature.

Note: To access the following documents, refer to the *Documentation > Reference Manuals* section of the Microchip PIC32 website: http://www.microchip.com/pic32

- **Section 1. "Introduction"** (DS60001127)
- **Section 2. "CPU"** (DS60001113)
- **Section 3. "Memory Organization"** (DS60001115)
- **Section 5. "Flash Program Memory"** (DS60001121)
- **Section 6. "Oscillator Configuration"** (DS60001112)
- **Section 7. "Resets"** (DS60001118)
- **Section 8. "Interrupt Controller"** (DS60001108)
- **Section 9. "Watchdog Timer and Power-up Timer"** (DS60001114)
- **Section 10. "Power-Saving Features"** (DS60001130)
- **Section 12. "I/O Ports"** (DS60001120)
- **Section 13. "Parallel Master Port (PMP)"** (DS60001128)
- **Section 14. "Timers"** (DS60001105)
- **Section 15. "Input Capture"** (DS60001122)
- **Section 16. "Output Compare"** (DS60001111)
- **Section 17. "10-bit Analog-to-Digital Converter (ADC)"** (DS60001104)
- **Section 19. "Comparator"** (DS60001110)
- **Section 20. "Comparator Voltage Reference (CVREF)"** (DS60001109)
- **Section 21. "Universal Asynchronous Receiver Transmitter (UART)"** (DS60001107)
- **Section 23. "Serial Peripheral Interface (SPI)"** (DS60001106)
- **Section 24. "Inter-Integrated Circuit (I^2C)"** (DS60001116)
- **Section 27. "USB On-The-Go (OTG)"** (DS60001126)
- **Section 29. "Real-Time Clock and Calendar (RTCC)"** (DS60001125)
- **Section 31. "Direct Memory Access (DMA) Controller"** (DS60001117)
- **Section 32. "Configuration"** (DS60001124)
- **Section 33. "Programming and Diagnostics"** (DS60001129)
- **Section 37. "Charge Time Measurement Unit (CTMU)"** (DS60001167)

© 2011-2016 Microchip Technology Inc.

1.0 DEVICE OVERVIEW

Note: This data sheet summarizes the features of the PIC32MX1XX/2XX 28/36/44-pin Family of devices. It is not intended to be a comprehensive reference source. To complement the information in this data sheet, refer to documents listed in the *Documentation > Reference Manual* section of the Microchip PIC32 web site (www.microchip.com/pic32).

This document contains device-specific information for PIC32MX1XX/2XX 28/36/44-pin Family devices.

Figure 1-1 illustrates a general block diagram of the core and peripheral modules in the PIC32MX1XX/2XX 28/36/44-pin Family of devices.

Table 1-1 lists the functions of the various pins shown in the pinout diagrams.

FIGURE 1-1: BLOCK DIAGRAM

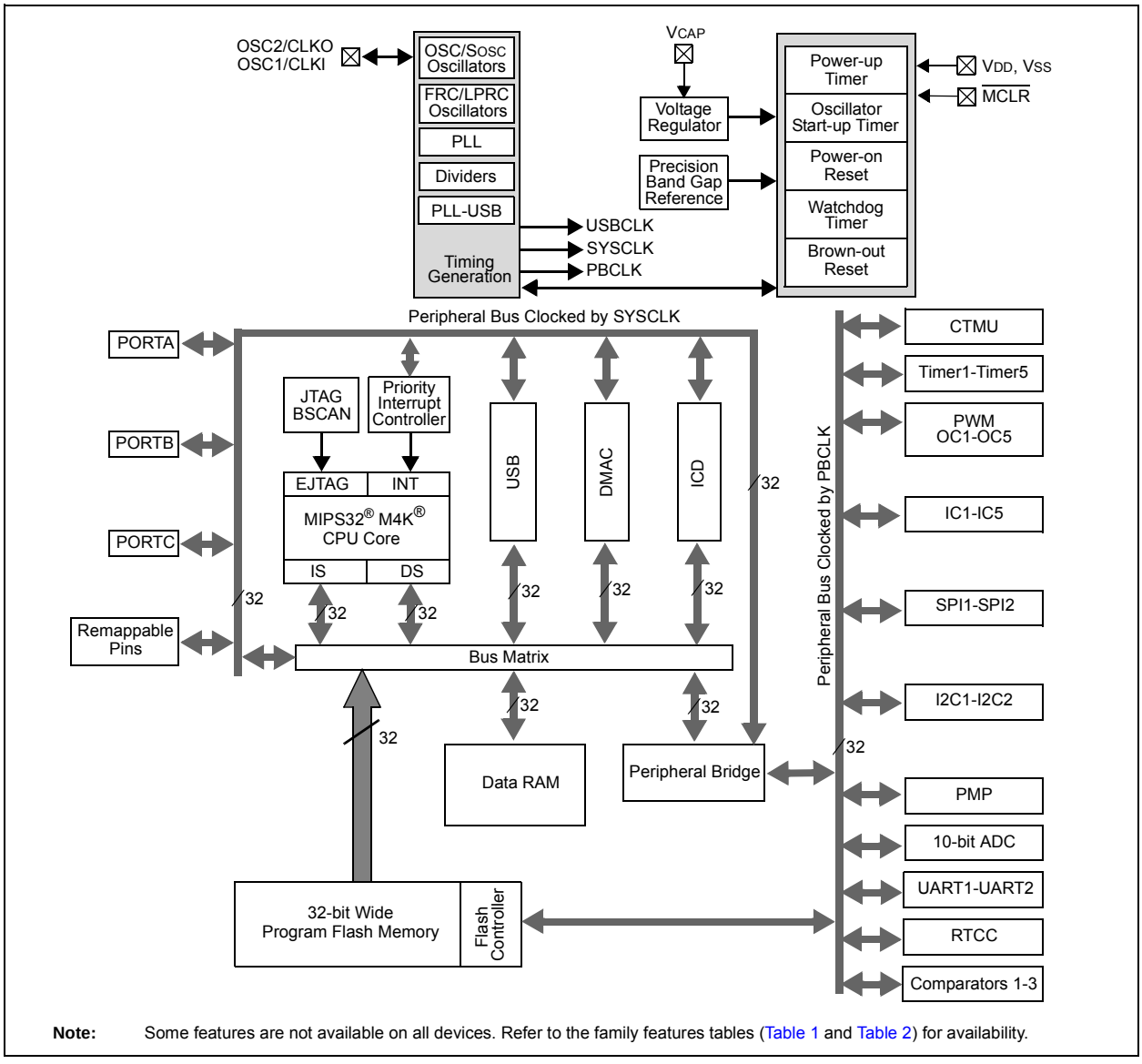

Note: Some features are not available on all devices. Refer to the family features tables (Table 1 and Table 2) for availability.

TABLE 1-1: PINOUT I/O DESCRIPTIONS

Pin Name	Pin Number(1)				Pin Type	Buffer Type	Description
	28-pin QFN	28-pin SSOP/ SPDIP/ SOIC	36-pin VTLA	44-pin QFN/ TQFP/ VTLA			
AN0	27	2	33	19	I	Analog	Analog input channels.
AN1	28	3	34	20	I	Analog	
AN2	1	4	35	21	I	Analog	
AN3	2	5	36	22	I	Analog	
AN4	3	6	1	23	I	Analog	
AN5	4	7	2	24	I	Analog	
AN6	—	—	3	25	I	Analog	
AN7	—	—	4	26	I	Analog	
AN8	—	—	—	27	I	Analog	
AN9	23	26	29	15	I	Analog	
AN10	22	25	28	14	I	Analog	
AN11	21	24	27	11	I	Analog	
AN12	20(2)	23(2)	26(2) 11(3)	10(2) 36(3)	I	Analog	
CLKI	6	9	7	30	I	ST/CMOS	External clock source input. Always associated with OSC1 pin function.
CLKO	7	10	8	31	O	—	Oscillator crystal output. Connects to crystal or resonator in Crystal Oscillator mode. Optionally functions as CLKO in RC and EC modes. Always associated with OSC2 pin function.
OSC1	6	9	7	30	I	ST/CMOS	Oscillator crystal input. ST buffer when configured in RC mode; CMOS otherwise.
OSC2	7	10	8	31	O	—	Oscillator crystal output. Connects to crystal or resonator in Crystal Oscillator mode. Optionally functions as CLKO in RC and EC modes.
SOSCI	8	11	9	33	I	ST/CMOS	32.768 kHz low-power oscillator crystal input; CMOS otherwise.
SOSCO	9	12	10	34	O	—	32.768 kHz low-power oscillator crystal output.
REFCLKI	PPS	PPS	PPS	PPS	I	ST	Reference Input Clock
REFCLKO	PPS	PPS	PPS	PPS	O	—	Reference Output Clock
IC1	PPS	PPS	PPS	PPS	I	ST	Capture Inputs 1-5
IC2	PPS	PPS	PPS	PPS	I	ST	
IC3	PPS	PPS	PPS	PPS	I	ST	
IC4	PPS	PPS	PPS	PPS	I	ST	
IC5	PPS	PPS	PPS	PPS	I	ST	

Legend: CMOS = CMOS compatible input or output; ST = Schmitt Trigger input with CMOS levels; TTL = TTL input buffer; Analog = Analog input; O = Output; PPS = Peripheral Pin Select; P = Power; I = Input; — = N/A

Note 1: Pin numbers are provided for reference only. See the **"Pin Diagrams"** section for device pin availability.

2: Pin number for PIC32MX1XX devices only.

3: Pin number for PIC32MX2XX devices only.

© 2011-2016 Microchip Technology Inc.

TABLE 1-1: PINOUT I/O DESCRIPTIONS (CONTINUED)

Pin Name	Pin Number(1)				Pin Type	Buffer Type	Description
	28-pin QFN	28-pin SSOP/ SPDIP/ SOIC	36-pin VTLA	44-pin QFN/ TQFP/ VTLA			
OC1	PPS	PPS	PPS	PPS	O	—	Output Compare Output 1
OC2	PPS	PPS	PPS	PPS	O	—	Output Compare Output 2
OC3	PPS	PPS	PPS	PPS	O	—	Output Compare Output 3
OC4	PPS	PPS	PPS	PPS	O	—	Output Compare Output 4
OC5	PPS	PPS	PPS	PPS	O	—	Output Compare Output 5
OCFA	PPS	PPS	PPS	PPS	I	ST	Output Compare Fault A Input
OCFB	PPS	PPS	PPS	PPS	I	ST	Output Compare Fault B Input
INT0	13	16	17	43	I	ST	External Interrupt 0
INT1	PPS	PPS	PPS	PPS	I	ST	External Interrupt 1
INT2	PPS	PPS	PPS	PPS	I	ST	External Interrupt 2
INT3	PPS	PPS	PPS	PPS	I	ST	External Interrupt 3
INT4	PPS	PPS	PPS	PPS	I	ST	External Interrupt 4
RA0	27	2	33	19	I/O	ST	PORTA is a bidirectional I/O port
RA1	28	3	34	20	I/O	ST	
RA2	6	9	7	30	I/O	ST	
RA3	7	10	8	31	I/O	ST	
RA4	9	12	10	34	I/O	ST	
RA7	—	—	—	13	I/O	ST	
RA8	—	—	—	32	I/O	ST	
RA9	—	—	—	35	I/O	ST	
RA10	—	—	—	12	I/O	ST	
RB0	1	4	35	21	I/O	ST	PORTB is a bidirectional I/O port
RB1	2	5	36	22	I/O	ST	
RB2	3	6	1	23	I/O	ST	
RB3	4	7	2	24	I/O	ST	
RB4	8	11	9	33	I/O	ST	
RB5	11	14	15	41	I/O	ST	
RB6	12(2)	15(2)	16(2)	42(2)	I/O	ST	
RB7	13	16	17	43	I/O	ST	
RB8	14	17	18	44	I/O	ST	
RB9	15	18	19	1	I/O	ST	
RB10	18	21	24	8	I/O	ST	
RB11	19	22	25	9	I/O	ST	
RB12	20(2)	23(2)	26(2)	10(2)	I/O	ST	
RB13	21	24	27	11	I/O	ST	
RB14	22	25	28	14	I/O	ST	
RB15	23	26	29	15	I/O	ST	

Legend: CMOS = CMOS compatible input or output; ST = Schmitt Trigger input with CMOS levels; TTL = TTL input buffer; Analog = Analog input; O = Output; PPS = Peripheral Pin Select; P = Power; I = Input; — = N/A

Note 1: Pin numbers are provided for reference only. See the "**Pin Diagrams**" section for device pin availability.

2: Pin number for PIC32MX1XX devices only.

3: Pin number for PIC32MX2XX devices only.

TABLE 1-1: PINOUT I/O DESCRIPTIONS (CONTINUED)

Pin Name	Pin Number(1)				Pin Type	Buffer Type	Description
	28-pin QFN	28-pin SSOP/ SPDIP/ SOIC	36-pin VTLA	44-pin QFN/ TQFP/ VTLA			
RC0	—	—	3	25	I/O	ST	PORTC is a bidirectional I/O port
RC1	—	—	4	26	I/O	ST	
RC2	—	—	—	27	I/O	ST	
RC3	—	—	11	36	I/O	ST	
RC4	—	—	—	37	I/O	ST	
RC5	—	—	—	38	I/O	ST	
RC6	—	—	—	2	I/O	ST	
RC7	—	—	—	3	I/O	ST	
RC8	—	—	—	4	I/O	ST	
RC9	—	—	20	5	I/O	ST	
T1CK	9	12	10	34	I	ST	Timer1 external clock input
T2CK	PPS	PPS	PPS	PPS	I	ST	Timer2 external clock input
T3CK	PPS	PPS	PPS	PPS	I	ST	Timer3 external clock input
T4CK	PPS	PPS	PPS	PPS	I	ST	Timer4 external clock input
T5CK	PPS	PPS	PPS	PPS	I	ST	Timer5 external clock input
$\overline{\text{U1CTS}}$	PPS	PPS	PPS	PPS	I	ST	UART1 clear to send
$\overline{\text{U1RTS}}$	PPS	PPS	PPS	PPS	O	—	UART1 ready to send
U1RX	PPS	PPS	PPS	PPS	I	ST	UART1 receive
U1TX	PPS	PPS	PPS	PPS	O	—	UART1 transmit
$\overline{\text{U2CTS}}$	PPS	PPS	PPS	PPS	I	ST	UART2 clear to send
$\overline{\text{U2RTS}}$	PPS	PPS	PPS	PPS	O	—	UART2 ready to send
U2RX	PPS	PPS	PPS	PPS	I	ST	UART2 receive
U2TX	PPS	PPS	PPS	PPS	O	—	UART2 transmit
SCK1	22	25	28	14	I/O	ST	Synchronous serial clock input/output for SPI1
SDI1	PPS	PPS	PPS	PPS	I	ST	SPI1 data in
SDO1	PPS	PPS	PPS	PPS	O	—	SPI1 data out
$\overline{\text{SS1}}$	PPS	PPS	PPS	PPS	I/O	ST	SPI1 slave synchronization or frame pulse I/O
SCK2	23	26	29	15	I/O	ST	Synchronous serial clock input/output for SPI2
SDI2	PPS	PPS	PPS	PPS	I	ST	SPI2 data in
SDO2	PPS	PPS	PPS	PPS	O	—	SPI2 data out
$\overline{\text{SS2}}$	PPS	PPS	PPS	PPS	I/O	ST	SPI2 slave synchronization or frame pulse I/O
SCL1	14	17	18	44	I/O	ST	Synchronous serial clock input/output for I2C1

Legend: CMOS = CMOS compatible input or output; Analog = Analog input; P = Power
ST = Schmitt Trigger input with CMOS levels; O = Output; I = Input
TTL = TTL input buffer; PPS = Peripheral Pin Select; — = N/A

Note 1: Pin numbers are provided for reference only. See the "**Pin Diagrams**" section for device pin availability.
2: Pin number for PIC32MX1XX devices only.
3: Pin number for PIC32MX2XX devices only.

© 2011-2016 Microchip Technology Inc.

TABLE 1-1: PINOUT I/O DESCRIPTIONS (CONTINUED)

Pin Name	Pin Number(1)				Pin Type	Buffer Type	Description
	28-pin QFN	28-pin SSOP/ SPDIP/ SOIC	36-pin VTLA	44-pin QFN/ TQFP/ VTLA			
SDA1	15	18	19	1	I/O	ST	Synchronous serial data input/output for I2C1
SCL2	4	7	2	24	I/O	ST	Synchronous serial clock input/output for I2C2
SDA2	3	6	1	23	I/O	ST	Synchronous serial data input/output for I2C2
TMS	19(2) 11(3)	22(2) 14(3)	25(2) 15(3)	12	I	ST	JTAG Test mode select pin
TCK	14	17	18	13	I	ST	JTAG test clock input pin
TDI	13	16	17	35	O	—	JTAG test data input pin
TDO	15	18	19	32	O	—	JTAG test data output pin
RTCC	4	7	2	24	O	ST	Real-Time Clock alarm output
CVREF-	28	3	34	20	I	Analog	Comparator Voltage Reference (low)
CVREF+	27	2	33	19	I	Analog	Comparator Voltage Reference (high)
CVREFOUT	22	25	28	14	O	Analog	Comparator Voltage Reference output
C1INA	4	7	2	24	I	Analog	Comparator Inputs
C1INB	3	6	1	23	I	Analog	
C1INC	2	5	36	22	I	Analog	
C1IND	1	4	35	21	I	Analog	
C2INA	2	5	36	22	I	Analog	
C2INB	1	4	35	21	I	Analog	
C2INC	4	7	2	24	I	Analog	
C2IND	3	6	1	23	I	Analog	
C3INA	23	26	29	15	I	Analog	
C3INB	22	25	28	14	I	Analog	
C3INC	27	2	33	19	I	Analog	
C3IND	1	4	35	21	I	Analog	
C1OUT	PPS	PPS	PPS	PPS	O	—	Comparator Outputs
C2OUT	PPS	PPS	PPS	PPS	O	—	
C3OUT	PPS	PPS	PPS	PPS	O	—	

Legend: CMOS = CMOS compatible input or output; ST = Schmitt Trigger input with CMOS levels; TTL = TTL input buffer; Analog = Analog input; O = Output; PPS = Peripheral Pin Select; P = Power; I = Input; — = N/A

Note 1: Pin numbers are provided for reference only. See the "**Pin Diagrams**" section for device pin availability.

2: Pin number for PIC32MX1XX devices only.

3: Pin number for PIC32MX2XX devices only.

TABLE 1-1: PINOUT I/O DESCRIPTIONS (CONTINUED)

Pin Name	Pin Number(1)				Pin Type	Buffer Type	Description
	28-pin QFN	28-pin SSOP/ SPDIP/ SOIC	36-pin VTLA	44-pin QFN/ TQFP/ VTLA			
PMA0	7	10	8	3	I/O	TTL/ST	Parallel Master Port Address bit 0 input (Buffered Slave modes) and output (Master modes)
PMA1	9	12	10	2	I/O	TTL/ST	Parallel Master Port Address bit 1 input (Buffered Slave modes) and output (Master modes)
PMA2		—	—	27	O	—	Parallel Master Port address (Demultiplexed Master modes)
PMA3		—	—	38	O	—	
PMA4		—	—	37	O	—	
PMA5		—	—	4	O	—	
PMA6		—	—	5	O	—	
PMA7		—	—	13	O	—	
PMA8		—	—	32	O	—	
PMA9		—	—	35	O	—	
PMA10		—	—	12	O	—	
PMCS1	23	26	29	15	O	—	Parallel Master Port Chip Select 1 strobe
PMD0	20(2)	23(2)	26(2)	10(2)	I/O	TTL/ST	Parallel Master Port data (Demultiplexed Master mode) or address/data (Multiplexed Master modes)
	1(3)	4(3)	35(3)	21(3)			
PMD1	19(2)	22(2)	25(2)	9(2)	I/O	TTL/ST	
	2(3)	5(3)	36(3)	22(3)			
PMD2	18(2)	21(2)	24(2)	8(2)	I/O	TTL/ST	
	3(3)	6(3)	1(3)	23(3)			
PMD3	15	18	19	1	I/O	TTL/ST	
PMD4	14	17	18	44	I/O	TTL/ST	
PMD5	13	16	17	43	I/O	TTL/ST	
PMD6	12(2)	15(2)	16(2)	42(2)	I/O	TTL/ST	
	28(3)	3(3)	34(3)	20(3)			
PMD7	11(2)	14(2)	15(2)	41(2)	I/O	TTL/ST	
	27(3)	2(3)	33(3)	19(3)			
PMRD	21	24	27	11	O	—	Parallel Master Port read strobe
PMWR	22(2)	25(2)	28(2)	14(2)	O	—	Parallel Master Port write strobe
	4(3)	7(3)	2(3)	24(3)			
VBUS	12(3)	15(3)	16(3)	42(3)	I	Analog	USB bus power monitor
VUSB3V3	20(3)	23(3)	26(3)	10(3)	P	—	USB internal transceiver supply. This pin must be connected to VDD.
VBUSON	22(3)	25(3)	28(3)	14(3)	O	—	USB Host and OTG bus power control output
D+	18(3)	21(3)	24(3)	8(3)	I/O	Analog	USB D+
D-	19(3)	22(3)	25(3)	9(3)	I/O	Analog	USB D-

Legend: CMOS = CMOS compatible input or output; ST = Schmitt Trigger input with CMOS levels; TTL = TTL input buffer; Analog = Analog input; O = Output; PPS = Peripheral Pin Select; P = Power; I = Input; — = N/A

Note 1: Pin numbers are provided for reference only. See the **"Pin Diagrams"** section for device pin availability.

2: Pin number for PIC32MX1XX devices only.

3: Pin number for PIC32MX2XX devices only.

© 2011-2016 Microchip Technology Inc.

TABLE 1-1: PINOUT I/O DESCRIPTIONS (CONTINUED)

Pin Name	Pin Number(1)				Pin Type	Buffer Type	Description
	28-pin QFN	28-pin SSOP/ SPDIP/ SOIC	36-pin VTLA	44-pin QFN/ TQFP/ VTLA			
USBID	11(3)	14(3)	15(3)	41(3)	I	ST	USB OTG ID detect
CTED1	27	2	33	19	I	ST	CTMU External Edge Input
CTED2	28	3	34	20	I	ST	
CTED3	13	16	17	43	I	ST	
CTED4	15	18	19	1	I	ST	
CTED5	22	25	28	14	I	ST	
CTED6	23	26	29	15	I	ST	
CTED7	—	—	20	5	I	ST	
CTED8	—	—	—	13	I	ST	
CTED9	9	12	10	34	I	ST	
CTED10	14	17	18	44	I	ST	
CTED11	18	21	24	8	I	ST	
CTED12	2	5	36	22	I	ST	
CTED13	3	6	1	23	I	ST	
CTPLS	21	24	27	11	O	—	CTMU Pulse Output
PGED1	1	4	35	21	I/O	ST	Data I/O pin for Programming/Debugging Communication Channel 1
PGEC1	2	5	36	22	I	ST	Clock input pin for Programming/Debugging Communication Channel 1
PGED2	18	21	24	8	I/O	ST	Data I/O pin for Programming/Debugging Communication Channel 2
PGEC2	19	22	25	9	I	ST	Clock input pin for Programming/Debugging Communication Channel 2
PGED3	11(2) 27(3)	14(2) 2(3)	15(2) 33(3)	41(2) 19(3)	I/O	ST	Data I/O pin for Programming/Debugging Communication Channel 3
PGEC3	12(2) 28(3)	15(2) 3(3)	16(2) 34(3)	42(2) 20(3)	I	ST	Clock input pin for Programming/ Debugging Communication Channel 3
PGED4	—	—	3	12	I/O	ST	Data I/O pin for Programming/Debugging Communication Channel 4
PGEC4	—	—	4	13	I	ST	Clock input pin for Programming/ Debugging Communication Channel 4

Legend: CMOS = CMOS compatible input or output; ST = Schmitt Trigger input with CMOS levels; TTL = TTL input buffer; Analog = Analog input; O = Output; PPS = Peripheral Pin Select; P = Power; I = Input; — = N/A

Note 1: Pin numbers are provided for reference only. See the **"Pin Diagrams"** section for device pin availability.

2: Pin number for PIC32MX1XX devices only.

3: Pin number for PIC32MX2XX devices only.

TABLE 1-1: PINOUT I/O DESCRIPTIONS (CONTINUED)

Pin Name	Pin Number(1)				Pin Type	Buffer Type	Description
	28-pin QFN	28-pin SSOP/ SPDIP/ SOIC	36-pin VTLA	44-pin QFN/ TQFP/ VTLA			
$\overline{MCLR}$	26	1	32	18	I/P	ST	Master Clear (Reset) input. This pin is an active-low Reset to the device.
AVDD	25	28	31	17	P	—	Positive supply for analog modules. This pin must be connected at all times.
AVSS	24	27	30	16	P	—	Ground reference for analog modules
VDD	10	13	5, 13, 14, 23	28, 40	P	—	Positive supply for peripheral logic and I/O pins
VCAP	17	20	22	7	P	—	CPU logic filter capacitor connection
VSS	5, 16	8, 19	6, 12, 21	6, 29, 39	P	—	Ground reference for logic and I/O pins. This pin must be connected at all times.
VREF+	27	2	33	19	I	Analog	Analog voltage reference (high) input
VREF-	28	3	34	20	I	Analog	Analog voltage reference (low) input

Legend: CMOS = CMOS compatible input or output; Analog = Analog input; P = Power
ST = Schmitt Trigger input with CMOS levels; O = Output; I = Input
TTL = TTL input buffer; PPS = Peripheral Pin Select; — = N/A

Note 1: Pin numbers are provided for reference only. See the **"Pin Diagrams"** section for device pin availability.
2: Pin number for PIC32MX1XX devices only.
3: Pin number for PIC32MX2XX devices only.

© 2011-2016 Microchip Technology Inc.

2.0 GUIDELINES FOR GETTING STARTED WITH 32-BIT MCUs

Note: This data sheet summarizes the features of the PIC32MX1XX/2XX 28/36/44-pin Family of devices. It is not intended to be a comprehensive reference source. To complement the information in this data sheet, refer to the documents listed in the *Documentation > Reference Manual* section of the Microchip PIC32 web site (www.microchip.com/pic32).

2.1 Basic Connection Requirements

Getting started with the PIC32MX1XX/2XX 28/36/44-pin Family of 32-bit Microcontrollers (MCUs) requires attention to a minimal set of device pin connections before proceeding with development. The following is a list of pin names, which must always be connected:

- All VDD and VSS pins (see **2.2 "Decoupling Capacitors"**)
- All AVDD and AVSS pins, even if the ADC module is not used (see **2.2 "Decoupling Capacitors"**)
- VCAP pin (see **2.3 "Capacitor on Internal Voltage Regulator (VCAP)"**)
- $\overline{\text{MCLR}}$ pin (see **2.4 "Master Clear (MCLR) Pin"**)
- PGECx/PGEDx pins, used for In-Circuit Serial Programming™ (ICSP™) and debugging purposes (see **2.5 "ICSP Pins"**)
- OSC1 and OSC2 pins, when external oscillator source is used (see **2.7 "External Oscillator Pins"**)

The following pins may be required:

- VREF+/VREF- pins – used when external voltage reference for the ADC module is implemented

Note: The AVDD and AVSS pins must be connected, regardless of ADC use and the ADC voltage reference source.

2.2 Decoupling Capacitors

The use of decoupling capacitors on power supply pins, such as VDD, VSS, AVDD and AVSS is required. See Figure 2-1.

Consider the following criteria when using decoupling capacitors:

- **Value and type of capacitor:** A value of 0.1 µF (100 nF), 10-20V is recommended. The capacitor should be a low Equivalent Series Resistance (low-ESR) capacitor and have resonance frequency in the range of 20 MHz and higher. It is further recommended that ceramic capacitors be used.
- **Placement on the printed circuit board:** The decoupling capacitors should be placed as close to the pins as possible. It is recommended that the capacitors be placed on the same side of the board as the device. If space is constricted, the capacitor can be placed on another layer on the PCB using a via; however, ensure that the trace length from the pin to the capacitor is within one-quarter inch (6 mm) in length.
- **Handling high frequency noise:** If the board is experiencing high frequency noise, upward of tens of MHz, add a second ceramic-type capacitor in parallel to the above described decoupling capacitor. The value of the second capacitor can be in the range of 0.01 µF to 0.001 µF. Place this second capacitor next to the primary decoupling capacitor. In high-speed circuit designs, consider implementing a decade pair of capacitances as close to the power and ground pins as possible. For example, 0.1 µF in parallel with 0.001 µF.
- **Maximizing performance:** On the board layout from the power supply circuit, run the power and return traces to the decoupling capacitors first, and then to the device pins. This ensures that the decoupling capacitors are first in the power chain. Equally important is to keep the trace length between the capacitor and the power pins to a minimum thereby reducing PCB track inductance.

© 2011-2016 Microchip Technology Inc.

FIGURE 2-1: RECOMMENDED MINIMUM CONNECTION

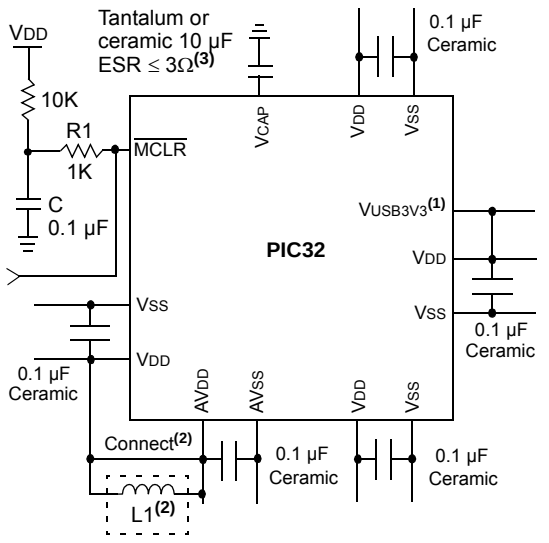

Note 1: If the USB module is not used, this pin must be connected to VDD.

2: As an option, instead of a hard-wired connection, an inductor (L1) can be substituted between VDD and AVDD to improve ADC noise rejection. The inductor impedance should be less than 3Ω and the inductor capacity greater than 10 mA.

Where:

$$f = \frac{FCNV}{2} \quad \text{(i.e., ADC conversion rate/2)}$$

$$f = \frac{1}{(2\pi\sqrt{LC})}$$

$$L = \left(\frac{1}{(2\pi f\sqrt{C})}\right)^2$$

1: Aluminum or electrolytic capacitors should not be used. ESR ≤ 3Ω from -40ºC to 125ºC @ SYSCLK frequency (i.e., MIPS).

2.2.1 BULK CAPACITORS

The use of a bulk capacitor is recommended to improve power supply stability. Typical values range from 4.7 µF to 47 µF. This capacitor should be located as close to the device as possible.

2.3 Capacitor on Internal Voltage Regulator (VCAP)

2.3.1 INTERNAL REGULATOR MODE

A low-ESR (3 ohm) capacitor is required on the VCAP pin, which is used to stabilize the internal voltage regulator output. The VCAP pin must not be connected to VDD, and must have a CEFC capacitor, with at least a 6V rating, connected to ground. The type can be ceramic or tantalum. Refer to **30.0 "Electrical Characteristics"** for additional information on CEFC specifications.

2.4 Master Clear ($\overline{\text{MCLR}}$) Pin

The $\overline{\text{MCLR}}$ pin provides two specific device functions:

- Device Reset
- Device programming and debugging

Pulling The $\overline{\text{MCLR}}$ pin low generates a device Reset. Figure 2-2 illustrates a typical $\overline{\text{MCLR}}$ circuit. During device programming and debugging, the resistance and capacitance that can be added to the pin must be considered. Device programmers and debuggers drive the $\overline{\text{MCLR}}$ pin. Consequently, specific voltage levels (VIH and VIL) and fast signal transitions must not be adversely affected. Therefore, specific values of R and C will need to be adjusted based on the application and PCB requirements.

For example, as illustrated in Figure 2-2, it is recommended that the capacitor C, be isolated from the $\overline{\text{MCLR}}$ pin during programming and debugging operations.

Place the components illustrated in Figure 2-2 within one-quarter inch (6 mm) from the $\overline{\text{MCLR}}$ pin.

FIGURE 2-2: EXAMPLE OF $\overline{\text{MCLR}}$ PIN CONNECTIONS

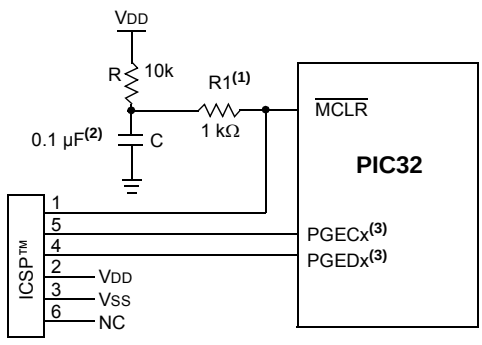

Note 1: 470Ω ≤ R1 ≤ 1Ω will limit any current flowing into $\overline{\text{MCLR}}$ from the external capacitor C, in the event of $\overline{\text{MCLR}}$ pin breakdown, due to Electrostatic Discharge (ESD) or Electrical Overstress (EOS). Ensure that the $\overline{\text{MCLR}}$ pin VIH and VIL specifications are met without interfering with the Debug/Programmer tools.

2: The capacitor can be sized to prevent unintentional Resets from brief glitches or to extend the device Reset period during POR.

3: No pull-ups or bypass capacitors are allowed on active debug/program PGECx/PGEDx pins.

2.5 ICSP Pins

The PGECx and PGEDx pins are used for ICSP and debugging purposes. It is recommended to keep the trace length between the ICSP connector and the ICSP pins on the device as short as possible. If the ICSP connector is expected to experience an ESD event, a series resistor is recommended, with the value in the range of a few tens of Ohms, not to exceed 100 Ohms.

© 2011-2016 Microchip Technology Inc.

Pull-up resistors, series diodes and capacitors on the PGECx and PGEDx pins are not recommended as they will interfere with the programmer/debugger communications to the device. If such discrete components are an application requirement, they should be removed from the circuit during programming and debugging. Alternatively, refer to the AC/DC characteristics and timing requirements information in the respective device Flash programming specification for information on capacitive loading limits and pin input voltage high (V_{IH}) and input low (V_{IL}) requirements.

Ensure that the "Communication Channel Select" (i.e., PGECx/PGEDx pins) programmed into the device matches the physical connections for the ICSP to MPLAB® ICD 3 or MPLAB REAL ICE™.

For more information on ICD 3 and REAL ICE connection requirements, refer to the following documents that are available on the Microchip web site:

- *"Using MPLAB® ICD 3"* (poster) (DS50001765)
- *"MPLAB® ICD 3 Design Advisory"* (DS50001764)
- *"MPLAB® REAL ICE™ In-Circuit Debugger User's Guide"* (DS50001616)
- *"Using MPLAB® REAL ICE™ Emulator"* (poster) (DS50001749)

2.6 JTAG

The TMS, TDO, TDI and TCK pins are used for testing and debugging according to the Joint Test Action Group (JTAG) standard. It is recommended to keep the trace length between the JTAG connector and the JTAG pins on the device as short as possible. If the JTAG connector is expected to experience an ESD event, a series resistor is recommended with the value in the range of a few tens of Ohms, not to exceed 100 Ohms.

Pull-up resistors, series diodes and capacitors on the TMS, TDO, TDI and TCK pins are not recommended as they will interfere with the programmer/debugger communications to the device. If such discrete components are an application requirement, they should be removed from the circuit during programming and debugging. Alternatively, refer to the AC/DC characteristics and timing requirements information in the respective device Flash programming specification for information on capacitive loading limits and pin input voltage high (V_{IH}) and input low (V_{IL}) requirements.

2.7 External Oscillator Pins

Many MCUs have options for at least two oscillators: a high-frequency primary oscillator and a low-frequency secondary oscillator (refer to **Section 8.0 "Oscillator Configuration"** for details).

The oscillator circuit should be placed on the same side of the board as the device. Also, place the oscillator circuit close to the respective oscillator pins, not exceeding one-half inch (12 mm) distance between them. The load capacitors should be placed next to the oscillator itself, on the same side of the board. Use a grounded copper pour around the oscillator circuit to isolate them from surrounding circuits. The grounded copper pour should be routed directly to the MCU ground. Do not run any signal traces or power traces inside the ground pour. Also, if using a two-sided board, avoid any traces on the other side of the board where the crystal is placed. A suggested layout is illustrated in Figure 2-3.

FIGURE 2-3: SUGGESTED OSCILLATOR CIRCUIT PLACEMENT

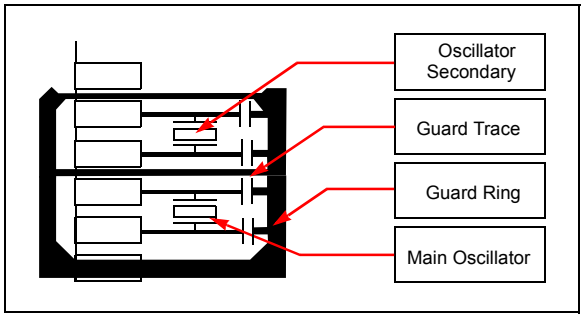

2.8 Unused I/Os

Unused I/O pins should not be allowed to float as inputs. They can be configured as outputs and driven to a logic-low state.

Alternatively, inputs can be reserved by connecting the pin to V_{SS} through a 1k to 10k resistor and configuring the pin as an input.

2.8.1 CRYSTAL OSCILLATOR DESIGN CONSIDERATION

The following example assumptions are used to calculate the Primary Oscillator loading capacitor values:

- CIN = PIC32_OSC2_Pin Capacitance = ~4-5 pF
- COUT = PIC32_OSC1_Pin Capacitance = ~4-5 pF
- C1 and C2 = XTAL manufacturing recommended loading capacitance
- Estimated PCB stray capacitance, (i.e.,12 mm length) = 2.5 pF

EXAMPLE 2-1: CRYSTAL LOAD CAPACITOR CALCULATION

Crystal manufacturer recommended: $C1 = C2 = 15\ pF$

Therefore:

$$C_{LOAD} = \{([C_{IN} + C1] * [C_{OUT} + C2]) / [C_{IN} + C1 + C2 + C_{OUT}] \} + \text{estimated oscillator PCB stray capacitance}$$

$$= \{([5 + 15][5 + 15]) / [5 + 15 + 15 + 5] \} + 2.5\ pF$$

$$= \{([20][20]) / [40] \} + 2.5$$

$$= 10 + 2.5 = 12.5\ pF$$

Rounded to the nearest standard value or 12 pF in this example for Primary Oscillator crystals “C1” and “C2”.

The following tips are used to increase oscillator gain, (i.e., to increase peak-to-peak oscillator signal):

- Select a crystal with a lower “minimum” power drive rating
- Select an crystal oscillator with a lower XTAL manufacturing “ESR” rating.
- Add a parallel resistor across the crystal. The smaller the resistor value the greater the gain. It is recommended to stay in the range of 600k to 1M
- C1 and C2 values also affect the gain of the oscillator. The lower the values, the higher the gain.
- C2/C1 ratio also affects gain. To increase the gain, make C1 slightly smaller than C2, which will also help start-up performance.

Note: Do not add excessive gain such that the oscillator signal is clipped, flat on top of the sine wave. If so, you need to reduce the gain or add a series resistor, RS, as shown in circuit “C” in Figure 2-4. Failure to do so will stress and age the crystal, which can result in an early failure. Adjust the gain to trim the max peak-to-peak to ~VDD-0.6V. When measuring the oscillator signal you must use a FET scope probe or a probe with ≤ 1.5 pF or the scope probe itself will unduly change the gain and peak-to-peak levels.

2.8.1.1 Additional Microchip References

- AN588 *“PICmicro® Microcontroller Oscillator Design Guide”*
- AN826 *“Crystal Oscillator Basics and Crystal Selection for rfPIC™ and PICmicro® Devices”*
- AN849 *“Basic PICmicro® Oscillator Design”*

FIGURE 2-4: PRIMARY CRYSTAL OSCILLATOR CIRCUIT RECOMMENDATIONS

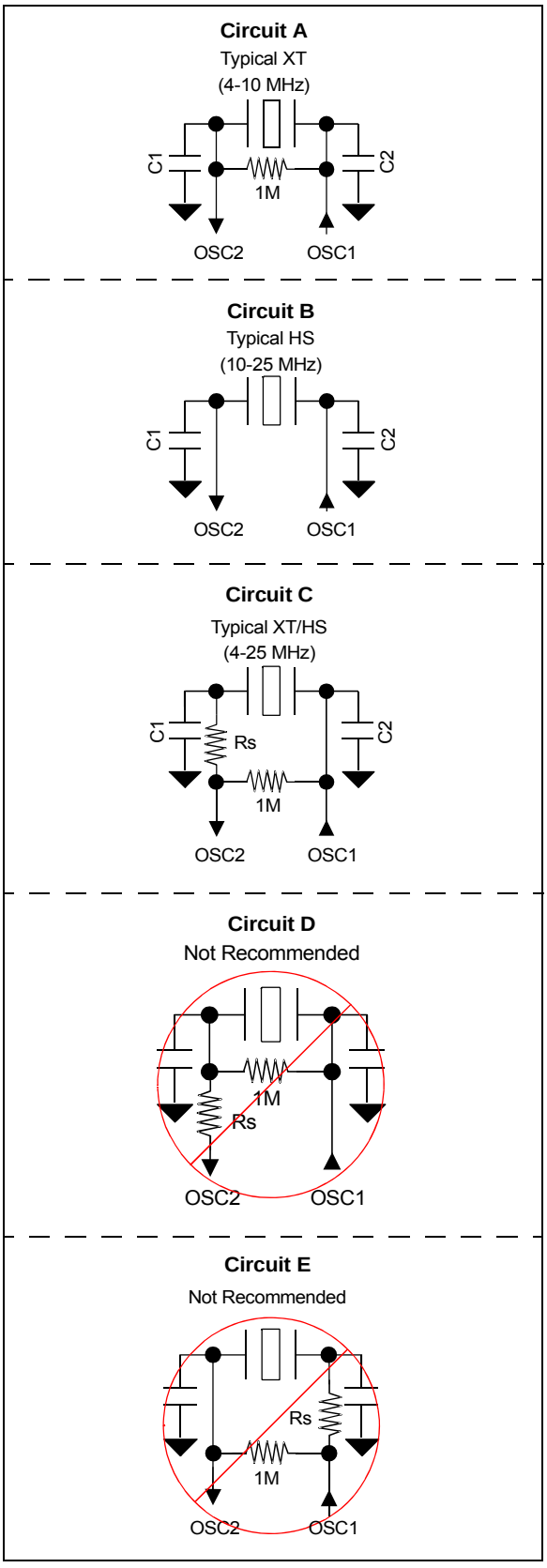

© 2011-2016 Microchip Technology Inc.

2.9 Typical Application Connection Examples

Examples of typical application connections are shown in Figure 2-5 and Figure 2-6.

FIGURE 2-5: CAPACITIVE TOUCH SENSING WITH GRAPHICS APPLICATION

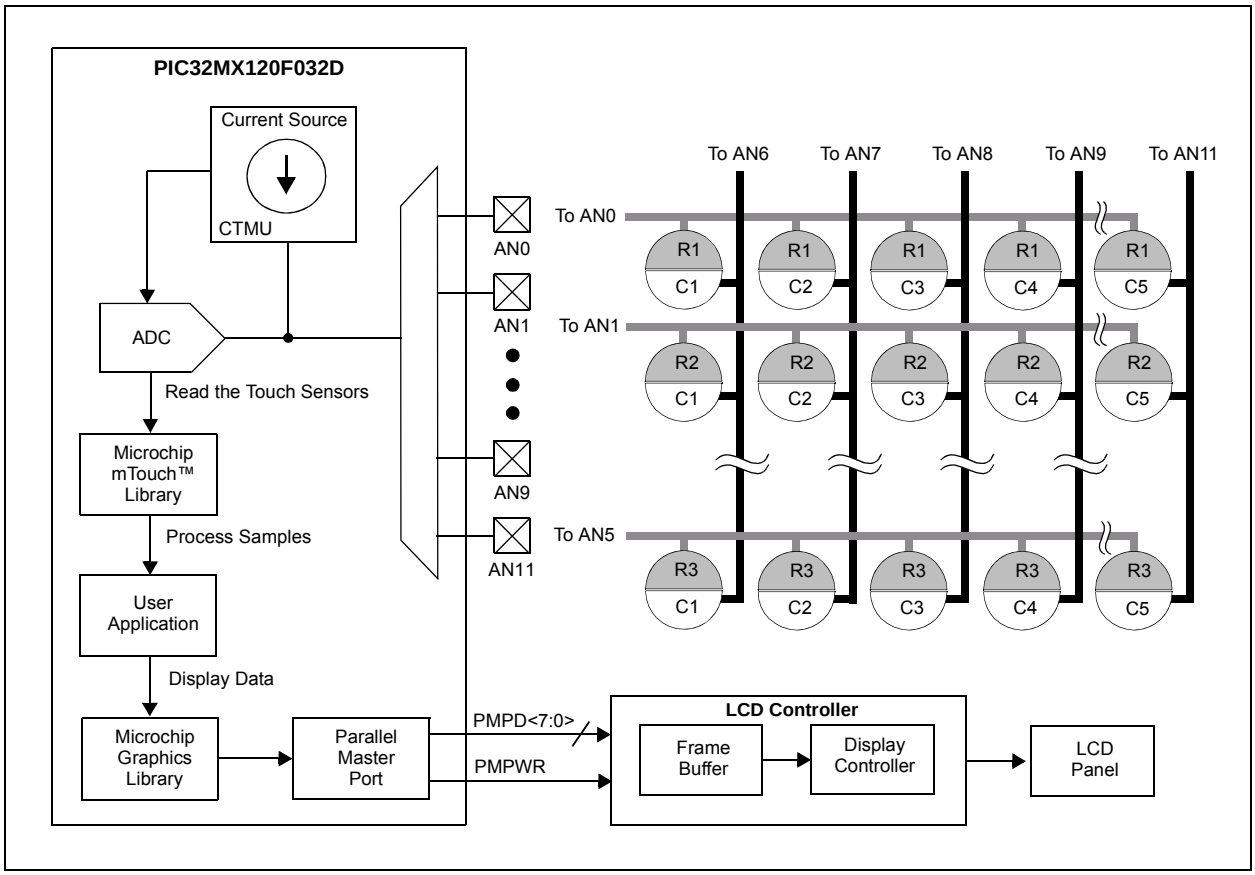

FIGURE 2-6: AUDIO PLAYBACK APPLICATION

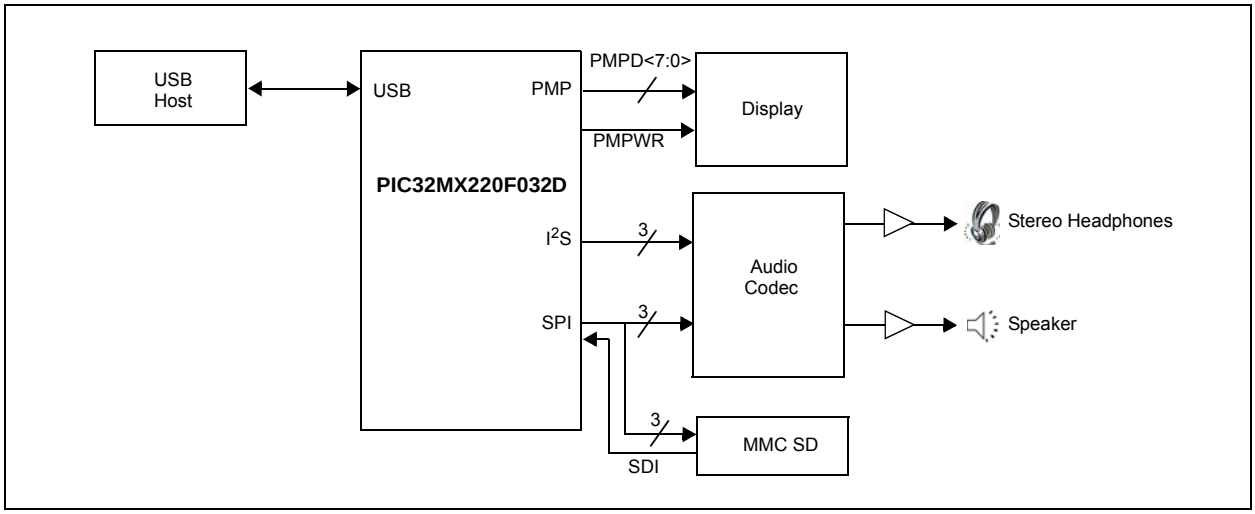

NOTES:

© 2011-2016 Microchip Technology Inc.

3.0 CPU

Note: This data sheet summarizes the features of the PIC32MX1XX/2XX 28/36/44-pin Family of devices. It is not intended to be a comprehensive reference source. To complement the information in this data sheet, refer to **Section 2. "CPU"** (DS60001113), which is available from the *Documentation > Reference Manual* section of the Microchip PIC32 web site (www.microchip.com/pic32). Resources for the MIPS32® M4K® Processor Core are available at: www.imgtec.com.

The MIPS32® M4K® Processor Core is the heart of the PIC32MX1XX/2XX family processor. The CPU fetches instructions, decodes each instruction, fetches source operands, executes each instruction and writes the results of instruction execution to the destinations.

3.1 Features

- 5-stage pipeline
- 32-bit address and data paths
- MIPS32 Enhanced Architecture (Release 2)
  - Multiply-accumulate and multiply-subtract instructions
  - Targeted multiply instruction
  - Zero/One detect instructions
  - `WAIT` instruction
  - Conditional move instructions (`MOVN`, `MOVZ`)
  - Vectored interrupts
  - Programmable exception vector base
  - Atomic interrupt enable/disable
  - Bit field manipulation instructions
- MIPS16e® code compression
  - 16-bit encoding of 32-bit instructions to improve code density
  - Special PC-relative instructions for efficient loading of addresses and constants
  - `SAVE` and `RESTORE` macro instructions for setting up and tearing down stack frames within subroutines
  - Improved support for handling 8 and 16-bit data types
- Simple Fixed Mapping Translation (FMT) mechanism
- Simple dual bus interface
  - Independent 32-bit address and data buses
  - Transactions can be aborted to improve interrupt latency
- Autonomous multiply/divide unit
  - Maximum issue rate of one 32x16 multiply per clock
  - Maximum issue rate of one 32x32 multiply every other clock
  - Early-in iterative divide. Minimum 11 and maximum 33 clock latency (dividend (*rs*) sign extension-dependent)
- Power control
  - Minimum frequency: 0 MHz
  - Low-Power mode (triggered by `WAIT` instruction)
  - Extensive use of local gated clocks
- EJTAG debug and instruction trace
  - Support for single stepping
  - Virtual instruction and data address/value
  - Breakpoints

FIGURE 3-1: MIPS32® M4K® PROCESSOR CORE BLOCK DIAGRAM

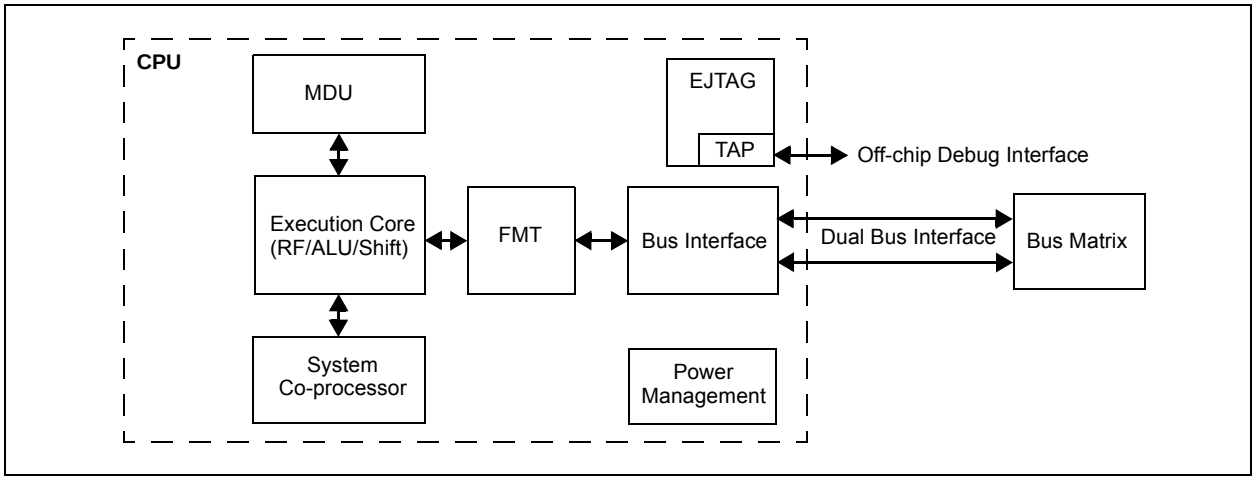

3.2 Architecture Overview

The MIPS32 M4K processor core contains several logic blocks working together in parallel, providing an efficient high-performance computing engine. The following blocks are included with the core:

- Execution Unit
- Multiply/Divide Unit (MDU)
- System Control Coprocessor (CP0)
- Fixed Mapping Translation (FMT)
- Dual Internal Bus interfaces
- Power Management
- MIPS16e® Support
- Enhanced JTAG (EJTAG) Controller

3.2.1 EXECUTION UNIT

The MIPS32 M4K processor core execution unit implements a load/store architecture with single-cycle ALU operations (logical, shift, add, subtract) and an autonomous multiply/divide unit. The core contains thirty-two 32-bit General Purpose Registers (GPRs) used for integer operations and address calculation. The register file consists of two read ports and one write port and is fully bypassed to minimize operation latency in the pipeline.

The execution unit includes:

- 32-bit adder used for calculating the data address
- Address unit for calculating the next instruction address
- Logic for branch determination and branch target address calculation
- Load aligner
- Bypass multiplexers used to avoid stalls when executing instruction streams where data producing instructions are followed closely by consumers of their results
- Leading Zero/One detect unit for implementing the `CLZ` and `CLO` instructions
- Arithmetic Logic Unit (ALU) for performing bitwise logical operations
- Shifter and store aligner

3.2.2 MULTIPLY/DIVIDE UNIT (MDU)

The MIPS32 M4K processor core includes a Multiply/Divide Unit (MDU) that contains a separate pipeline for multiply and divide operations. This pipeline operates in parallel with the Integer Unit (IU) pipeline and does not stall when the IU pipeline stalls. This allows MDU operations to be partially masked by system stalls and/or other integer unit instructions.

The high-performance MDU consists of a 32x16 booth recoded multiplier, result/accumulation registers (HI and LO), a divide state machine, and the necessary multiplexers and control logic. The first number shown ('32' of 32x16) represents the *rs* operand. The second number ('16' of 32x16) represents the *rt* operand. The PIC32 core only checks the value of the latter (*rt)* operand to determine how many times the operation must pass through the multiplier. The 16x16 and 32x16 operations pass through the multiplier once. A 32x32 operation passes through the multiplier twice.

The MDU supports execution of one 16x16 or 32x16 multiply operation every clock cycle; 32x32 multiply operations can be issued every other clock cycle. Appropriate interlocks are implemented to stall the issuance of back-to-back 32x32 multiply operations. The multiply operand size is automatically determined by logic built into the MDU.

Divide operations are implemented with a simple 1 bit per clock iterative algorithm. An early-in detection checks the sign extension of the dividend (*rs*) operand. If *rs* is 8 bits wide, 23 iterations are skipped. For a 16-bit wide *rs*, 15 iterations are skipped and for a 24-bit wide *rs*, 7 iterations are skipped. Any attempt to issue a subsequent `MDU` instruction while a divide is still active causes an IU pipeline stall until the divide operation is completed.

Table 3-1 lists the repeat rate (peak issue rate of cycles until the operation can be reissued) and latency (number of cycles until a result is available) for the PIC32 core multiply and divide instructions. The approximate latency and repeat rates are listed in terms of pipeline clocks.

TABLE 3-1: MIPS32® M4K® PROCESSOR CORE HIGH-PERFORMANCE INTEGER MULTIPLY/DIVIDE UNIT LATENCIES AND REPEAT RATES

Opcode	Operand Size (mul *rt*) (div *rs*)	Latency	Repeat Rate
`MULT/MULTU, MADD/MADDU, MSUB/MSUBU`	16 bits	1	1
	32 bits	2	2
`MUL`	16 bits	2	1
	32 bits	3	2
`DIV/DIVU`	8 bits	12	11
	16 bits	19	18
	24 bits	26	25
	32 bits	33	32

© 2011-2016 Microchip Technology Inc.

The MIPS architecture defines that the result of a multiply or divide operation be placed in the HI and LO registers. Using the Move-From-HI (MFHI) and Move-From-LO (MFLO) instructions, these values can be transferred to the General Purpose Register file.

In addition to the HI/LO targeted operations, the MIPS32® architecture also defines a multiply instruction, MUL, which places the least significant results in the primary register file instead of the HI/LO register pair. By avoiding the explicit MFLO instruction required when using the LO register, and by supporting multiple destination registers, the throughput of multiply-intensive operations is increased.

Two other instructions, Multiply-Add (MADD) and Multiply-Subtract (MSUB), are used to perform the multiply-accumulate and multiply-subtract operations. The MADD instruction multiplies two numbers and then adds the product to the current contents of the HI and LO registers. Similarly, the MSUB instruction multiplies two operands and then subtracts the product from the HI and LO registers. The MADD and MSUB operations are commonly used in DSP algorithms.

3.2.3 SYSTEM CONTROL COPROCESSOR (CP0)

In the MIPS architecture, CP0 is responsible for the virtual-to-physical address translation, the exception control system, the processor's diagnostics capability, the operating modes (Kernel, User and Debug) and whether interrupts are enabled or disabled. Configuration information, such as presence of options like MIPS16e, is also available by accessing the CP0 registers, listed in Table 3-2.

TABLE 3-2: COPROCESSOR 0 REGISTERS

Register Number	Register Name	Function
0-6	Reserved	Reserved in the PIC32MX1XX/2XX family core.
7	HWREna	Enables access via the RDHWR instruction to selected hardware registers.
8	BadVAddr(1)	Reports the address for the most recent address-related exception.
9	Count(1)	Processor cycle count.
10	Reserved	Reserved in the PIC32MX1XX/2XX family core.
11	Compare(1)	Timer interrupt control.
12	Status(1)	Processor status and control.
12	IntCtl(1)	Interrupt system status and control.
12	SRSCtl(1)	Shadow register set status and control.
12	SRSMap(1)	Provides mapping from vectored interrupt to a shadow set.
13	Cause(1)	Cause of last general exception.
14	EPC(1)	Program counter at last exception.
15	PRId	Processor identification and revision.
15	EBASE	Exception vector base register.
16	Config	Configuration register.
16	Config1	Configuration Register 1.
16	Config2	Configuration Register 2.
16	Config3	Configuration Register 3.
17-22	Reserved	Reserved in the PIC32MX1XX/2XX family core.
23	Debug(2)	Debug control and exception status.
24	DEPC(2)	Program counter at last debug exception.
25-29	Reserved	Reserved in the PIC32MX1XX/2XX family core.
30	ErrorEPC(1)	Program counter at last error.
31	DESAVE(2)	Debug handler scratchpad register.

Note 1: Registers used in exception processing.
2: Registers used during debug.

Coprocessor 0 also contains the logic for identifying and managing exceptions. Exceptions can be caused by a variety of sources, including alignment errors in data, external events or program errors. Table 3-3 lists the exception types in order of priority.

TABLE 3-3: MIPS32® M4K® PROCESSOR CORE EXCEPTION TYPES

Exception	Description
Reset	Assertion $\overline{\text{MCLR}}$ or a Power-on Reset (POR).
DSS	EJTAG debug single step.
DINT	EJTAG debug interrupt. Caused by the assertion of the external *EJ_DINT* input or by setting the EjtagBrk bit in the ECR register.
NMI	Assertion of NMI signal.
Interrupt	Assertion of unmasked hardware or software interrupt signal.
DIB	EJTAG debug hardware instruction break matched.
AdEL	Fetch address alignment error. Fetch reference to protected address.
IBE	Instruction fetch bus error.
DBp	EJTAG breakpoint (execution of `SDBBP` instruction).
Sys	Execution of `SYSCALL` instruction.
Bp	Execution of `BREAK` instruction.
RI	Execution of a reserved instruction.
CpU	Execution of a coprocessor instruction for a coprocessor that is not enabled.
CEU	Execution of a `CorExtend` instruction when `CorExtend` is not enabled.
Ov	Execution of an arithmetic instruction that overflowed.
Tr	Execution of a trap (when trap condition is true).
DDBL/DDBS	EJTAG Data Address Break (address only) or EJTAG data value break on store (address + value).
AdEL	Load address alignment error. Load reference to protected address.
AdES	Store address alignment error. Store to protected address.
DBE	Load or store bus error.
DDBL	EJTAG data hardware breakpoint matched in load data compare.

3.3 Power Management

The MIPS M4K processor core offers many power management features, including low-power design, active power management and power-down modes of operation. The core is a static design that supports slowing or Halting the clocks, which reduces system power consumption during Idle periods.

3.3.1 INSTRUCTION-CONTROLLED POWER MANAGEMENT

The mechanism for invoking Power-Down mode is through execution of the `WAIT` instruction. For more information on power management, see **Section 26.0 "Power-Saving Features"**.

3.4 EJTAG Debug Support

The MIPS M4K processor core provides an Enhanced JTAG (EJTAG) interface for use in the software debug of application and kernel code. In addition to standard User mode and Kernel modes of operation, the M4K core provides a Debug mode that is entered after a debug exception (derived from a hardware breakpoint, single-step exception, etc.) is taken and continues until a Debug Exception Return (`DERET`) instruction is executed. During this time, the processor executes the debug exception handler routine.

The EJTAG interface operates through the Test Access Port (TAP), a serial communication port used for transferring test data in and out of the core. In addition to the standard JTAG instructions, special instructions defined in the EJTAG specification define which registers are selected and how they are used.

© 2011-2016 Microchip Technology Inc.

4.0 MEMORY ORGANIZATION

Note: This data sheet summarizes the features of the PIC32MX1XX/2XX 28/36/44-pin Family of devices. It is not intended to be a comprehensive reference source.For detailed information, refer to **Section 3. "Memory Organization"** (DS60001115), which is available from the *Documentation > Reference Manual* section of the Microchip PIC32 web site (www.microchip.com/pic32).

PIC32MX1XX/2XX 28/36/44-pin Family microcontrollers provide 4 GB unified virtual memory address space. All memory regions, including program, data memory, Special Function Registers (SFRs), and Configuration registers, reside in this address space at their respective unique addresses. The program and data memories can be optionally partitioned into user and kernel memories. In addition, the data memory can be made executable, allowing PIC32MX1XX/2XX 28/36/44-pin Family devices to execute from data memory.

Key features include:

- 32-bit native data width
- Separate User (KUSEG) and Kernel (KSEG0/KSEG1) mode address space
- Flexible program Flash memory partitioning
- Flexible data RAM partitioning for data and program space
- Separate boot Flash memory for protected code
- Robust bus exception handling to intercept runaway code
- Simple memory mapping with Fixed Mapping Translation (FMT) unit
- Cacheable (KSEG0) and non-cacheable (KSEG1) address regions

4.1 PIC32MX1XX/2XX 28/36/44-pin Family Memory Layout

PIC32MX1XX/2XX 28/36/44-pin Family microcontrollers implement two address schemes: virtual and physical. All hardware resources, such as program memory, data memory and peripherals, are located at their respective physical addresses. Virtual addresses are exclusively used by the CPU to fetch and execute instructions as well as access peripherals. Physical addresses are used by bus master peripherals, such as DMA and the Flash controller, that access memory independently of the CPU.

The memory maps for the PIC32MX1XX/2XX 28/36/44-pin Family devices are illustrated in Figure 4-1 through Figure 4-6.

Table 4-1 provides SFR memory map details.

FIGURE 4-1: MEMORY MAP ON RESET FOR PIC32MX110/210 DEVICES (4 KB RAM, 16 KB FLASH)

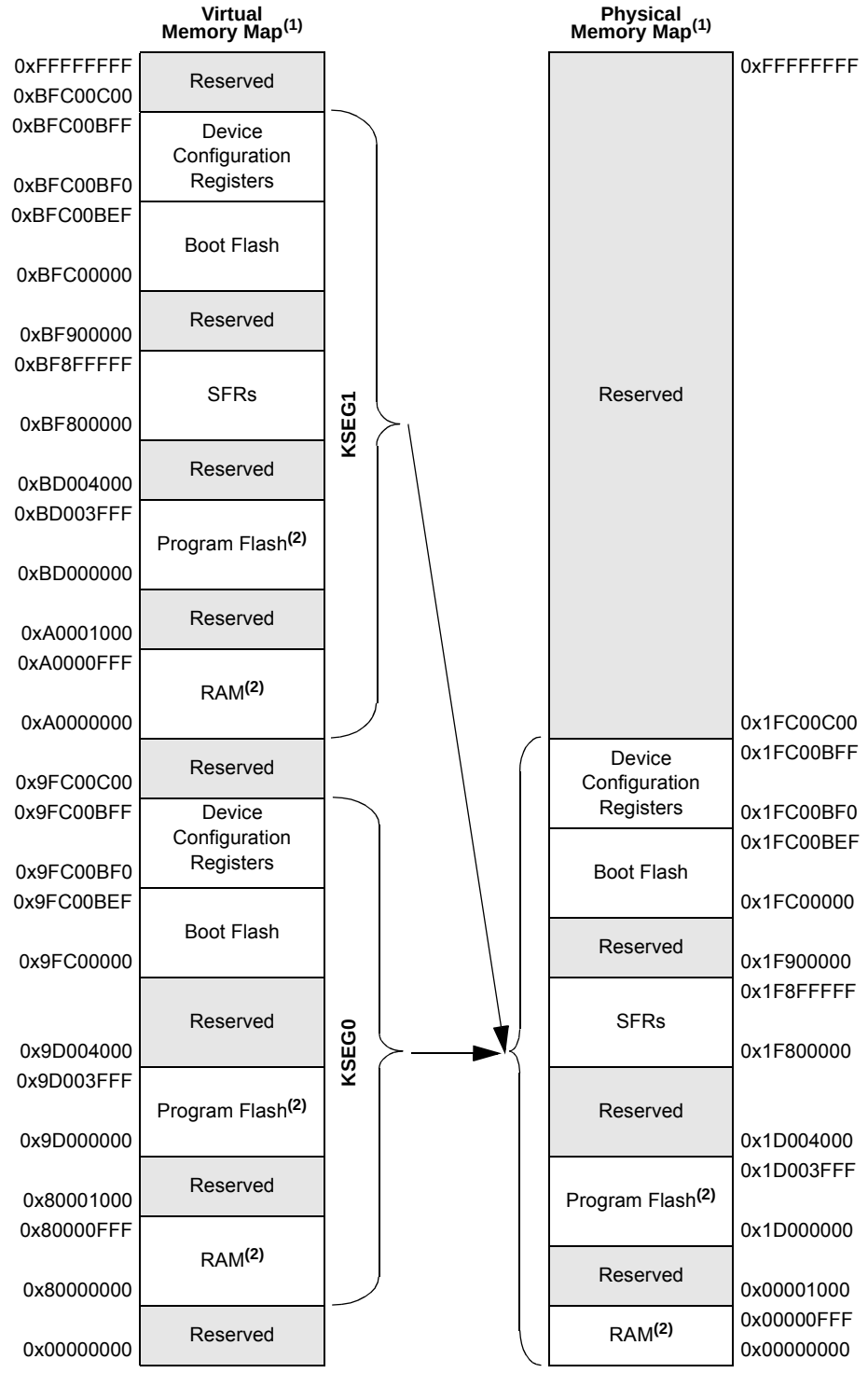

Note 1: Memory areas are not shown to scale.

2: The size of this memory region is programmable (see **Section 3. "Memory Organization"** (DS60001115) in the *"PIC32 Family Reference Manual"*) and can be changed by initialization code provided by end-user development tools (refer to the specific development tool documentation for information).

© 2011-2016 Microchip Technology Inc.

FIGURE 4-2: MEMORY MAP ON RESET FOR PIC32MX120/220 DEVICES (8 KB RAM, 32 KB FLASH)

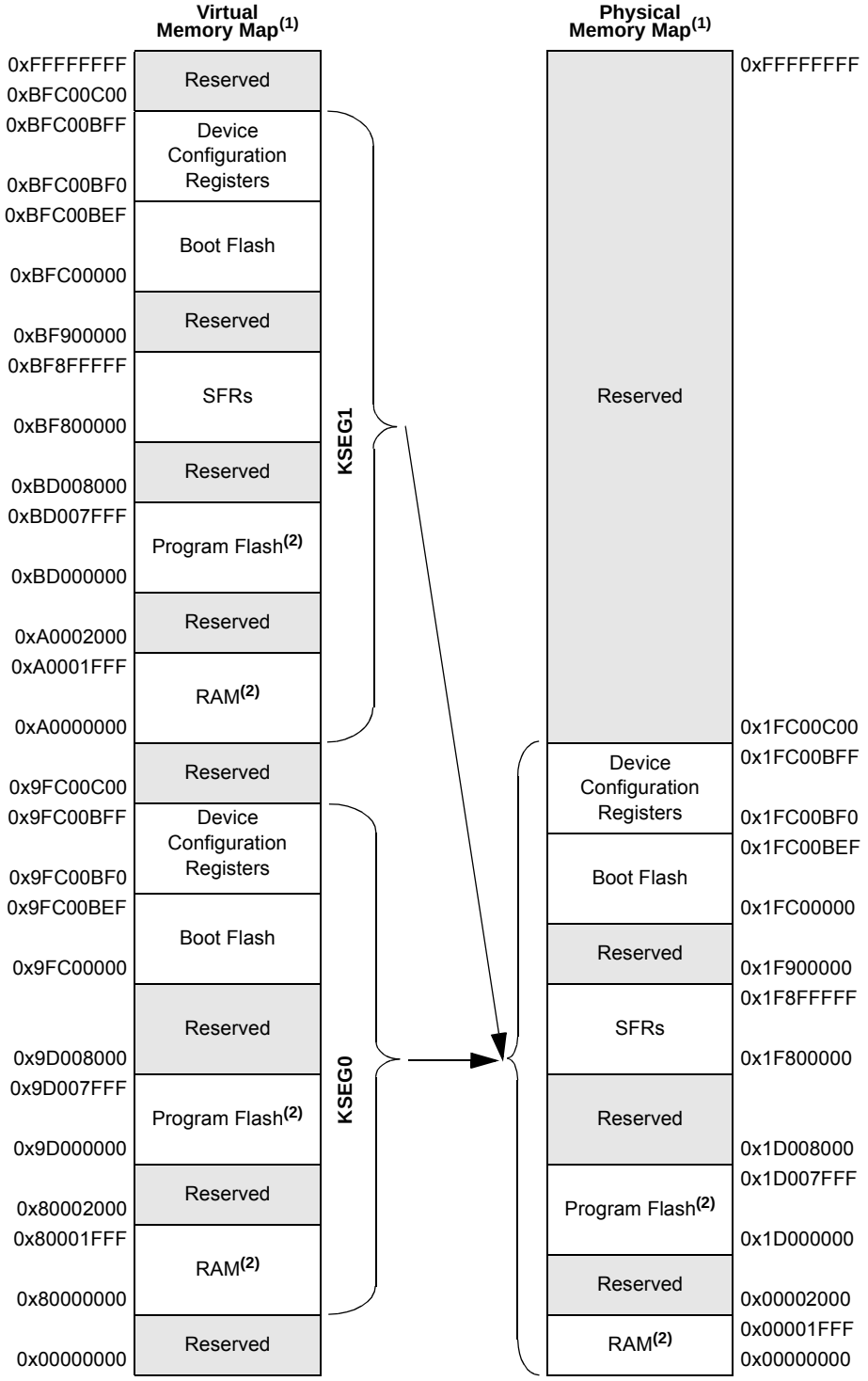

Note 1: Memory areas are not shown to scale.

2: The size of this memory region is programmable (see **Section 3. "Memory Organization"** (DS60001115) in the *"PIC32 Family Reference Manual"*) and can be changed by initialization code provided by end-user development tools (refer to the specific development tool documentation for information).

FIGURE 4-3: MEMORY MAP ON RESET FOR PIC32MX130/230 DEVICES (16 KB RAM, 64 KB FLASH)

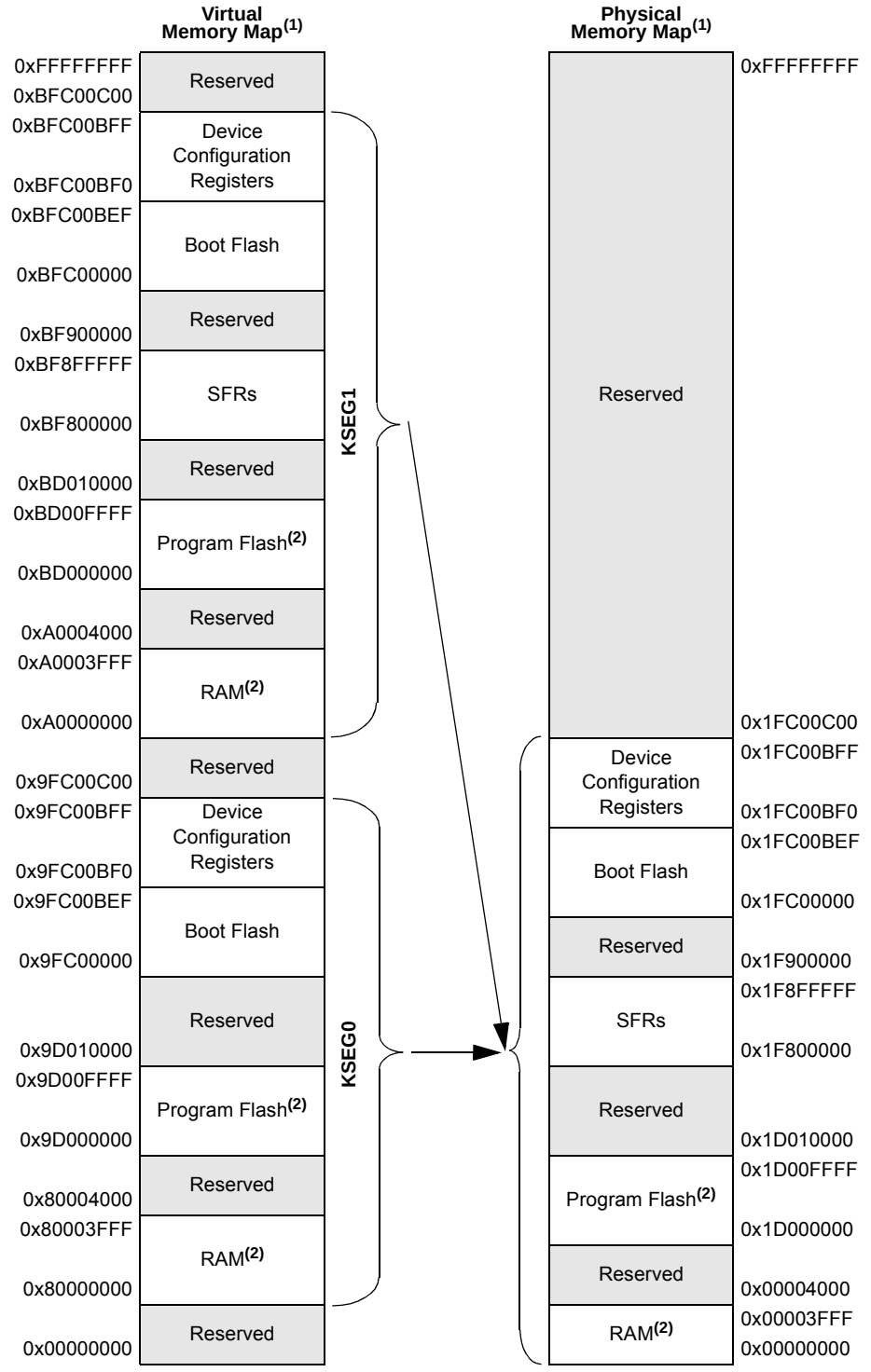

Note 1: Memory areas are not shown to scale.

2: The size of this memory region is programmable (see **Section 3. "Memory Organization"** (DS60001115) in the *"PIC32 Family Reference Manual"*) and can be changed by initialization code provided by end-user development tools (refer to the specific development tool documentation for information).

© 2011-2016 Microchip Technology Inc.

FIGURE 4-4: MEMORY MAP ON RESET FOR PIC32MX150/250 DEVICES (32 KB RAM, 128 KB FLASH)

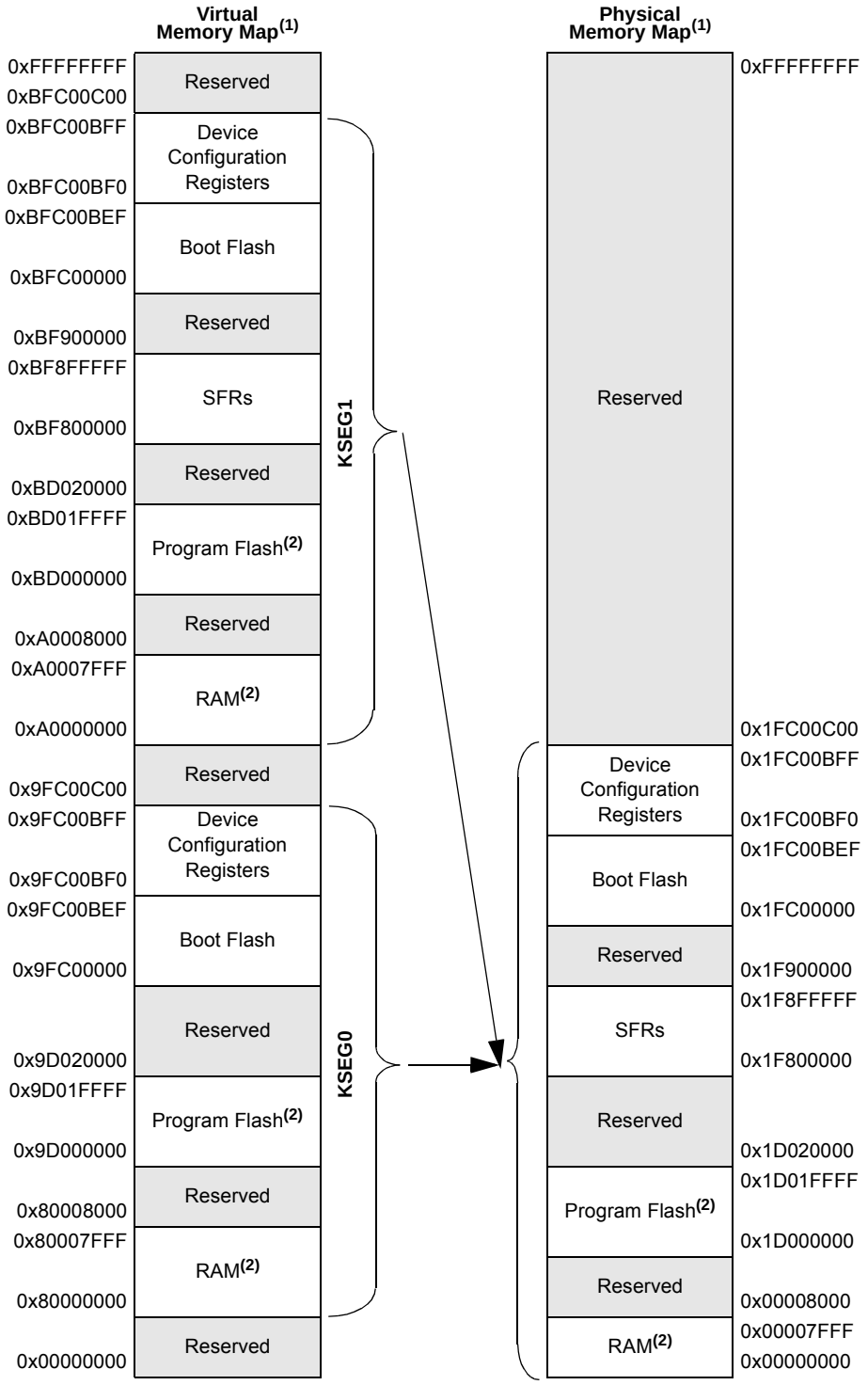

Note 1: Memory areas are not shown to scale.

2: The size of this memory region is programmable (see **Section 3. "Memory Organization"** (DS60001115) in the *"PIC32 Family Reference Manual"*) and can be changed by initialization code provided by end-user development tools (refer to the specific development tool documentation for information).

FIGURE 4-5: MEMORY MAP ON RESET FOR PIC32MX170/270 DEVICES (64 KB RAM, 256 KB FLASH)

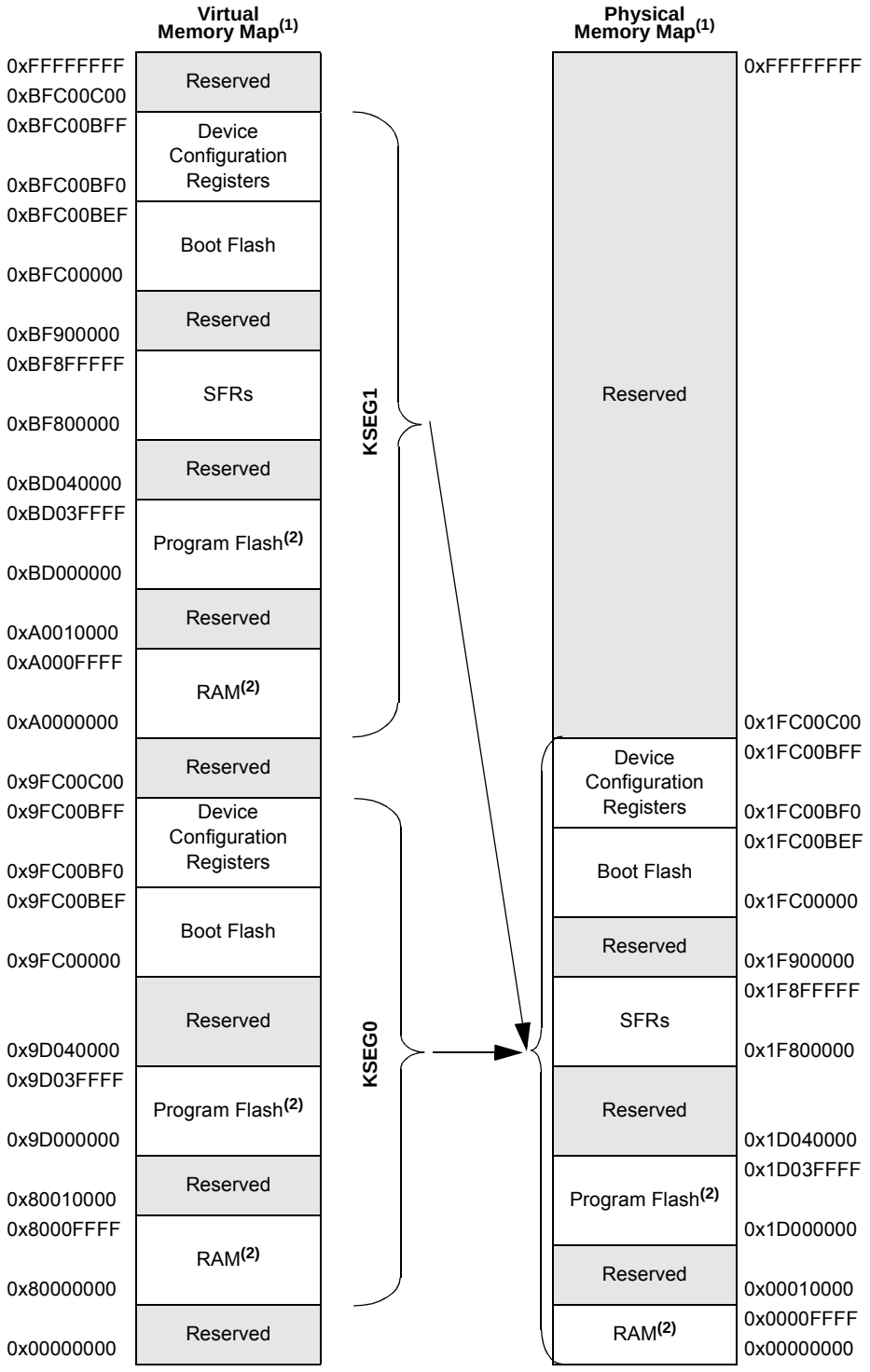

Note 1: Memory areas are not shown to scale.

2: The size of this memory region is programmable (see **Section 3. "Memory Organization"** (DS60001115) in the *"PIC32 Family Reference Manual"*) and can be changed by initialization code provided by end-user development tools (refer to the specific development tool documentation for information).

© 2011-2016 Microchip Technology Inc.

FIGURE 4-6: MEMORY MAP ON RESET FOR PIC32MX130/230 DEVICES (16 KB RAM, 256 KB FLASH)

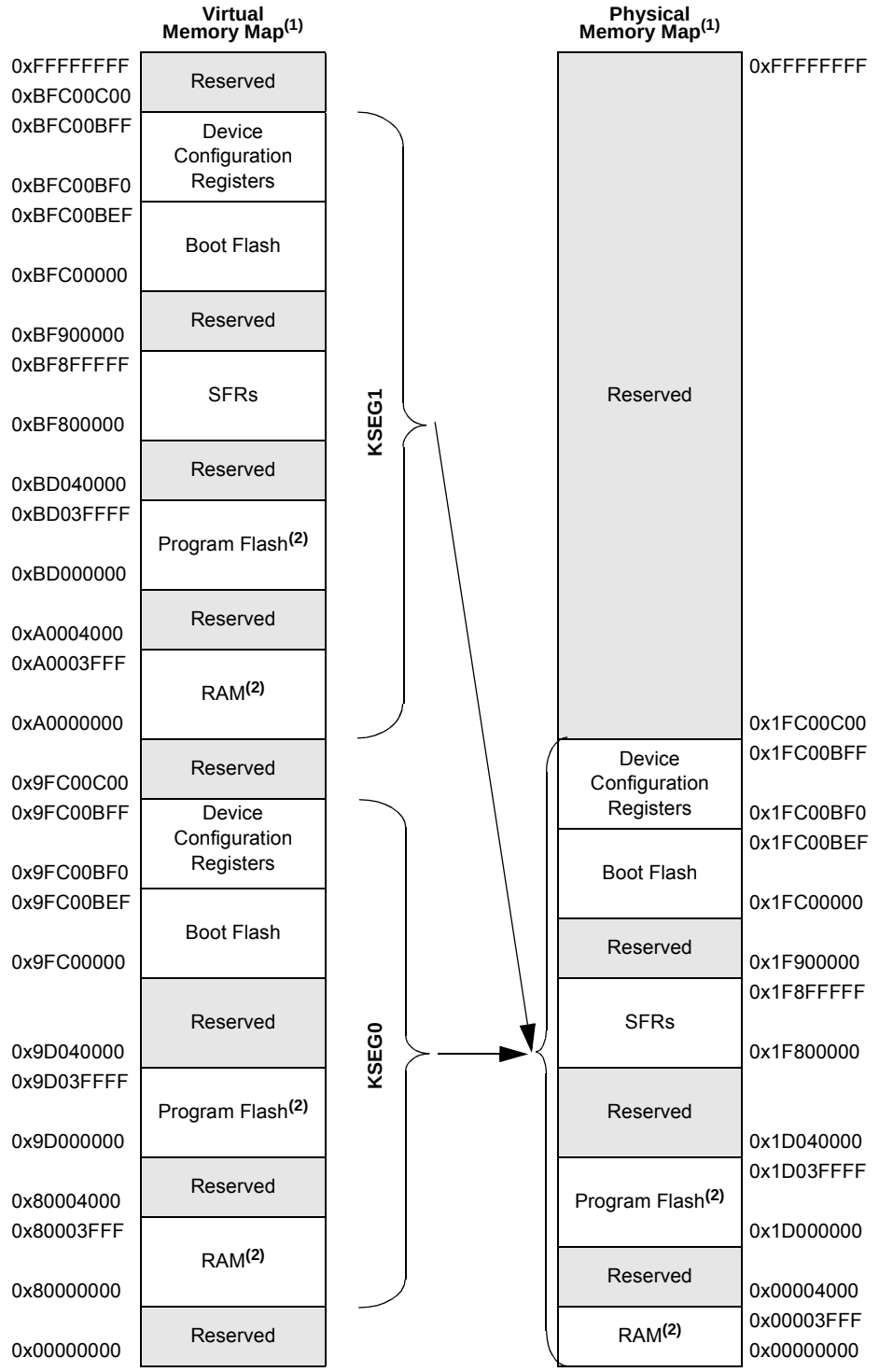

Note 1: Memory areas are not shown to scale.

2: The size of this memory region is programmable (see **Section 3. "Memory Organization"** (DS60001115) in the *"PIC32 Family Reference Manual"*) and can be changed by initialization code provided by end-user development tools (refer to the specific development tool documentation for information).

TABLE 4-1: SFR MEMORY MAP

Peripheral	Virtual Address	
	Base	Offset Start
Watchdog Timer	0xBF80	0x0000
RTCC		0x0200
Timer1-5		0x0600
Input Capture 1-5		0x2000
Output Compare 1-5		0x3000
IC1 and IC2		0x5000
SPI1 and SPI2		0x5800
UART1 and UART2		0x6000
PMP		0x7000
ADC		0x9000
CVREF		0x9800
Comparator		0xA000
CTMU		0xA200
Oscillator		0xF000
Device and Revision ID		0xF220
Peripheral Module Disable		0xF240
Flash Controller		0xF400
Reset		0xF600
PPS		0xFA04
Interrupts	0xBF88	0x1000
Bus Matrix		0x2000
DMA		0x3000
USB		0x5050
PORTA-PORTC		0x6000
Configuration	0xBFC0	0x0BF0

© 2011-2016 Microchip Technology Inc.

4.2 Bus Matrix Control Registers

TABLE 4-2: BUS MATRIX REGISTER MAP

Virtual Address (BF88_#)	Register Name	Bit Range	Bits																All Resets
			31/15	30/14	29/13	28/12	27/11	26/10	25/9	24/8	23/7	22/6	21/5	20/4	19/3	18/2	17/1	16/0	
2000	BMXCON(1)	31:16	—	—	—	—	—	—	—	—	—	—	—	BMXERRIXI	BMXERRICD	BMXERRDMA	BMXERRDS	BMXERRIS	001F
		15:0	—	—	—	—	—	—	—	—	—	BMXWSDRM	—	—	—	BMXARB<2:0>			0041
2010	BMXDKPBA(1)	31:16	—	—	—	—	—	—	—	—	—	—	—	—	—	—	—	—	0000
		15:0	BMXDKPBA<15:0>																0000
2020	BMXDUDBA(1)	31:16	—	—	—	—	—	—	—	—	—	—	—	—	—	—	—	—	0000
		15:0	BMXDUDBA<15:0>																0000
2030	BMXDUPBA(1)	31:16	—	—	—	—	—	—	—	—	—	—	—	—	—	—	—	—	0000
		15:0	BMXDUPBA<15:0>																0000
2040	BMXDRMSZ	31:16	BMXDRMSZ<31:0>																xxxx
		15:0																	xxxx
2050	BMXPUPBA(1)	31:16	—	—	—	—	—	—	—	—	—	—	—	—	BMXPUPBA<19:16>				0000
		15:0	BMXPUPBA<15:0>																0000
2060	BMXPFMSZ	31:16	BMXPFMSZ<31:0>																xxxx
		15:0																	xxxx
2070	BMXBOOTSZ	31:16	BMXBOOTSZ<31:0>																0000
		15:0																	0C00

Legend: x = unknown value on Reset; — = unimplemented, read as ‘0’. Reset values are shown in hexadecimal.

Note 1: This register has corresponding CLR, SET and INV registers at its virtual address, plus an offset of 0x4, 0x8 and 0xC, respectively. See **Section 11.2 “CLR, SET and INV Registers”** for more information.

© 2011-2016 Microchip Technology Inc.

REGISTER 4-1: BMXCON: BUS MATRIX CONFIGURATION REGISTER

Bit Range	Bit 31/23/15/7	Bit 30/22/14/6	Bit 29/21/13/5	Bit 28/20/12/4	Bit 27/19/11/3	Bit 26/18/10/2	Bit 25/17/9/1	Bit 24/16/8/0
31:24	U-0	U-0	U-0	U-0	U-0	U-0	U-0	U-0
	—	—	—	—	—	—	—	—
23:16	U-0	U-0	U-0	R/W-1	R/W-1	R/W-1	R/W-1	R/W-1
	—	—	—	BMX ERRIXI	BMX ERRICD	BMX ERRDMA	BMX ERRDS	BMX ERRIS
15:8	U-0	U-0	U-0	U-0	U-0	U-0	U-0	U-0
	—	—	—	—	—	—	—	—
7:0	U-0	R/W-1	U-0	U-0	U-0	R/W-0	R/W-0	R/W-1
	—	BMX WSDRM	—	—	—	BMXARB<2:0>		

Legend:		
R = Readable bit	W = Writable bit	U = Unimplemented bit, read as ‘0’
-n = Value at POR	‘1’ = Bit is set	‘0’ = Bit is cleared

bit 31-21 **Unimplemented:** Read as ‘0’

bit 20 **BMXERRIXI:** Enable Bus Error from IXI bit
1 = Enable bus error exceptions for unmapped address accesses initiated from IXI shared bus
0 = Disable bus error exceptions for unmapped address accesses initiated from IXI shared bus

bit 19 **BMXERRICD:** Enable Bus Error from ICD Debug Unit bit
1 = Enable bus error exceptions for unmapped address accesses initiated from ICD
0 = Disable bus error exceptions for unmapped address accesses initiated from ICD

bit 18 **BMXERRDMA:** Bus Error from DMA bit
1 = Enable bus error exceptions for unmapped address accesses initiated from DMA
0 = Disable bus error exceptions for unmapped address accesses initiated from DMA

bit 17 **BMXERRDS:** Bus Error from CPU Data Access bit (disabled in Debug mode)
1 = Enable bus error exceptions for unmapped address accesses initiated from CPU data access
0 = Disable bus error exceptions for unmapped address accesses initiated from CPU data access

bit 16 **BMXERRIS:** Bus Error from CPU Instruction Access bit (disabled in Debug mode)
1 = Enable bus error exceptions for unmapped address accesses initiated from CPU instruction access
0 = Disable bus error exceptions for unmapped address accesses initiated from CPU instruction access

bit 15-7 **Unimplemented:** Read as ‘0’

bit 6 **BMXWSDRM:** CPU Instruction or Data Access from Data RAM Wait State bit
1 = Data RAM accesses from CPU have one wait state for address setup
0 = Data RAM accesses from CPU have zero wait states for address setup

bit 5-3 **Unimplemented:** Read as ‘0’

bit 2-0 **BMXARB<2:0>:** Bus Matrix Arbitration Mode bits
111 = Reserved (using these Configuration modes will produce undefined behavior)
•
•
•
011 = Reserved (using these Configuration modes will produce undefined behavior)
010 = Arbitration Mode 2
001 = Arbitration Mode 1 (default)
000 = Arbitration Mode 0

© 2011-2016 Microchip Technology Inc.

REGISTER 4-2: BMXDKPBA: DATA RAM KERNEL PROGRAM BASE ADDRESS REGISTER

Bit Range	Bit 31/23/15/7	Bit 30/22/14/6	Bit 29/21/13/5	Bit 28/20/12/4	Bit 27/19/11/3	Bit 26/18/10/2	Bit 25/17/9/1	Bit 24/16/8/0
31:24	U-0	U-0	U-0	U-0	U-0	U-0	U-0	U-0
	—	—	—	—	—	—	—	—
23:16	U-0	U-0	U-0	U-0	U-0	U-0	U-0	U-0
	—	—	—	—	—	—	—	—
15:8	R/W-0	R/W-0	R/W-0	R/W-0	R/W-0	R/W-0	R-0	R-0
	BMXDKPBA<15:8>							
7:0	R-0	R-0	R-0	R-0	R-0	R-0	R-0	R-0
	BMXDKPBA<7:0>							

Legend:			
R = Readable bit	W = Writable bit	U = Unimplemented bit, read as ‘0’	
-n = Value at POR	‘1’ = Bit is set	‘0’ = Bit is cleared	x = Bit is unknown

bit 31-16 **Unimplemented:** Read as ‘0’

bit 15-10 **BMXDKPBA<15:10>:** DRM Kernel Program Base Address bits
When non-zero, this value selects the relative base address for kernel program space in RAM

bit 9-0 **BMXDKPBA<9:0>:** Read-Only bits
This value is always ‘0’, which forces 1 KB increments

Note 1: At Reset, the value in this register is forced to zero, which causes all of the RAM to be allocated to Kernal mode data usage.

2: The value in this register must be less than or equal to BMXDRMSZ.

REGISTER 4-3: BMXDUDBA: DATA RAM USER DATA BASE ADDRESS REGISTER

Bit Range	Bit 31/23/15/7	Bit 30/22/14/6	Bit 29/21/13/5	Bit 28/20/12/4	Bit 27/19/11/3	Bit 26/18/10/2	Bit 25/17/9/1	Bit 24/16/8/0
31:24	U-0	U-0	U-0	U-0	U-0	U-0	U-0	U-0
	—	—	—	—	—	—	—	—
23:16	U-0	U-0	U-0	U-0	U-0	U-0	U-0	U-0
	—	—	—	—	—	—	—	—
15:8	R/W-0	R/W-0	R/W-0	R/W-0	R/W-0	R/W-0	R-0	R-0
	BMXDUDBA<15:8>							
7:0	R-0	R-0	R-0	R-0	R-0	R-0	R-0	R-0
	BMXDUDBA<7:0>							

Legend:			
R = Readable bit	W = Writable bit	U = Unimplemented bit, read as ‘0’	
-n = Value at POR	‘1’ = Bit is set	‘0’ = Bit is cleared	x = Bit is unknown

bit 31-16 **Unimplemented:** Read as ‘0’

bit 15-10 **BMXDUDBA<15:10>:** DRM User Data Base Address bits

When non-zero, the value selects the relative base address for User mode data space in RAM, the value must be greater than BMXDKPBA.

bit 9-0 **BMXDUDBA<9:0>:** Read-Only bits

This value is always ‘0’, which forces 1 KB increments

Note 1: At Reset, the value in this register is forced to zero, which causes all of the RAM to be allocated to Kernal mode data usage.

2: The value in this register must be less than or equal to BMXDRMSZ.

© 2011-2016 Microchip Technology Inc.

REGISTER 4-4: BMXDUPBA: DATA RAM USER PROGRAM BASE ADDRESS REGISTER

Bit Range	Bit 31/23/15/7	Bit 30/22/14/6	Bit 29/21/13/5	Bit 28/20/12/4	Bit 27/19/11/3	Bit 26/18/10/2	Bit 25/17/9/1	Bit 24/16/8/0
31:24	U-0	U-0	U-0	U-0	U-0	U-0	U-0	U-0
	—	—	—	—	—	—	—	—
23:16	U-0	U-0	U-0	U-0	U-0	U-0	U-0	U-0
	—	—	—	—	—	—	—	—
15:8	R/W-0	R/W-0	R/W-0	R/W-0	R/W-0	R/W-0	R-0	R-0
	BMXDUPBA<15:8>							
7:0	R-0	R-0	R-0	R-0	R-0	R-0	R-0	R-0
	BMXDUPBA<7:0>							

Legend:			
R = Readable bit	W = Writable bit	U = Unimplemented bit, read as ‘0’	
-n = Value at POR	‘1’ = Bit is set	‘0’ = Bit is cleared	x = Bit is unknown

bit 31-16 **Unimplemented:** Read as ‘0’

bit 15-10 **BMXDUPBA<15:10>:** DRM User Program Base Address bits

When non-zero, the value selects the relative base address for User mode program space in RAM, BMXDUPBA must be greater than BMXDUDBA.

bit 9-0 **BMXDUPBA<9:0>:** Read-Only bits

This value is always ‘0’, which forces 1 KB increments

Note 1: At Reset, the value in this register is forced to zero, which causes all of the RAM to be allocated to Kernal mode data usage.

2: The value in this register must be less than or equal to BMXDRMSZ.

REGISTER 4-5: BMXDRMSZ: DATA RAM SIZE REGISTER

Bit Range	Bit 31/23/15/7	Bit 30/22/14/6	Bit 29/21/13/5	Bit 28/20/12/4	Bit 27/19/11/3	Bit 26/18/10/2	Bit 25/17/9/1	Bit 24/16/8/0
31:24	R	R	R	R	R	R	R	R
	BMXDRMSZ<31:24>							
23:16	R	R	R	R	R	R	R	R
	BMXDRMSZ<23:16>							
15:8	R	R	R	R	R	R	R	R
	BMXDRMSZ<15:8>							
7:0	R	R	R	R	R	R	R	R
	BMXDRMSZ<7:0>							

Legend:			
R = Readable bit	W = Writable bit	U = Unimplemented bit, read as ‘0’	
-n = Value at POR	‘1’ = Bit is set	‘0’ = Bit is cleared	x = Bit is unknown

bit 31-0 **BMXDRMSZ<31:0>:** Data RAM Memory (DRM) Size bits
Static value that indicates the size of the Data RAM in bytes:
0x00001000 = Device has 4 KB RAM
0x00002000 = Device has 8 KB RAM
0x00004000 = Device has 16 KB RAM
0x00008000 = Device has 32 KB RAM
0x00010000 = Device has 64 KB RAM

REGISTER 4-6: BMXPUPBA: PROGRAM FLASH (PFM) USER PROGRAM BASE ADDRESS REGISTER

Bit Range	Bit 31/23/15/7	Bit 30/22/14/6	Bit 29/21/13/5	Bit 28/20/12/4	Bit 27/19/11/3	Bit 26/18/10/2	Bit 25/17/9/1	Bit 24/16/8/0
31:24	U-0	U-0	U-0	U-0	U-0	U-0	U-0	U-0
	—	—	—	—	—	—	—	—
23:16	U-0	U-0	U-0	U-0	R/W-0	R/W-0	R/W-0	R/W-0
	—	—	—	—	BMXPUPBA<19:16>			
15:8	R/W-0	R/W-0	R/W-0	R/W-0	R/W-0	R-0	R-0	R-0
	BMXPUPBA<15:8>							
7:0	R-0	R-0	R-0	R-0	R-0	R-0	R-0	R-0
	BMXPUPBA<7:0>							

Legend:			
R = Readable bit	W = Writable bit	U = Unimplemented bit, read as ‘0’	
-n = Value at POR	‘1’ = Bit is set	‘0’ = Bit is cleared	x = Bit is unknown

bit 31-20 **Unimplemented:** Read as ‘0’

bit 19-11 **BMXPUPBA<19:11>:** Program Flash (PFM) User Program Base Address bits

bit 10-0 **BMXPUPBA<10:0>:** Read-Only bits
This value is always ‘0’, which forces 2 KB increments

Note 1: At Reset, the value in this register is forced to zero, which causes all of the RAM to be allocated to Kernal mode data usage.
2: The value in this register must be less than or equal to BMXPFMSZ.

© 2011-2016 Microchip Technology Inc.

REGISTER 4-7: BMXPFMSZ: PROGRAM FLASH (PFM) SIZE REGISTER

Bit Range	Bit 31/23/15/7	Bit 30/22/14/6	Bit 29/21/13/5	Bit 28/20/12/4	Bit 27/19/11/3	Bit 26/18/10/2	Bit 25/17/9/1	Bit 24/16/8/0
31:24	R	R	R	R	R	R	R	R
	BMXPFMSZ<31:24>							
23:16	R	R	R	R	R	R	R	R
	BMXPFMSZ<23:16>							
15:8	R	R	R	R	R	R	R	R
	BMXPFMSZ<15:8>							
7:0	R	R	R	R	R	R	R	R
	BMXPFMSZ<7:0>							

Legend:			
R = Readable bit	W = Writable bit	U = Unimplemented bit, read as ‘0’	
-n = Value at POR	‘1’ = Bit is set	‘0’ = Bit is cleared	x = Bit is unknown

bit 31-0 **BMXPFMSZ<31:0>:** Program Flash Memory (PFM) Size bits
Static value that indicates the size of the PFM in bytes:
0x00004000 = Device has 16 KB Flash
0x00008000 = Device has 32 KB Flash
0x00010000 = Device has 64 KB Flash
0x00020000 = Device has 128 KB Flash
0x00040000 = Device has 256 KB Flash

REGISTER 4-8: BMXBOOTSZ: BOOT FLASH (IFM) SIZE REGISTER

Bit Range	Bit 31/23/15/7	Bit 30/22/14/6	Bit 29/21/13/5	Bit 28/20/12/4	Bit 27/19/11/3	Bit 26/18/10/2	Bit 25/17/9/1	Bit 24/16/8/0
31:24	R	R	R	R	R	R	R	R
	BMXBOOTSZ<31:24>							
23:16	R	R	R	R	R	R	R	R
	BMXBOOTSZ<23:16>							
15:8	R	R	R	R	R	R	R	R
	BMXBOOTSZ<15:8>							
7:0	R	R	R	R	R	R	R	R
	BMXBOOTSZ<7:0>							

Legend:			
R = Readable bit	W = Writable bit	U = Unimplemented bit, read as ‘0’	
-n = Value at POR	‘1’ = Bit is set	‘0’ = Bit is cleared	x = Bit is unknown

bit 31-0 **BMXBOOTSZ<31:0>:** Boot Flash Memory (BFM) Size bits
Static value that indicates the size of the Boot PFM in bytes:
0x00000C00 = Device has 3 KB boot Flash

NOTES:

© 2011-2016 Microchip Technology Inc.

5.0 FLASH PROGRAM MEMORY

Note: This data sheet summarizes the features of the PIC32MX1XX/2XX 28/36/44-pin Family of devices. It is not intended to be a comprehensive reference source. To complement the information in this data sheet, refer to **Section 5. "Flash Program Memory"** (DS60001121), which is available from the *Documentation > Reference Manual* section of the Microchip PIC32 web site (www.microchip.com/pic32).

PIC32MX1XX/2XX 28/36/44-pin Family devices contain an internal Flash program memory for executing user code. There are three methods by which the user can program this memory:

- Run-Time Self-Programming (RTSP)
- EJTAG Programming
- In-Circuit Serial Programming™ (ICSP™)

RTSP is performed by software executing from either Flash or RAM memory. Information about RTSP techniques is available in **Section 5. "Flash Program Memory"** (DS60001121) in the *"PIC32 Family Reference Manual".*

EJTAG is performed using the EJTAG port of the device and an EJTAG capable programmer.

ICSP is performed using a serial data connection to the device and allows much faster programming times than RTSP.

The EJTAG and ICSP methods are described in the "*PIC32 Flash Programming Specification*" (DS60001145), which can be downloaded from the Microchip web site.

Note: The Flash page size on PIC32MX-1XX/2XX 28/36/44-pin Family devices is 1 KB and the row size is 128 bytes (256 IW and 32 IW, respectively).

5.1 Flash Controller Control Registers

TABLE 5-1: FLASH CONTROLLER REGISTER MAP

Virtual Address (BF80_#)	Register Name	Bit Range	Bits																All Resets
			31/15	30/14	29/13	28/12	27/11	26/10	25/9	24/8	23/7	22/6	21/5	20/4	19/3	18/2	17/1	16/0	
F400	NVMCON(1)	31:16	—	—	—	—	—	—	—	—	—	—	—	—	—	—	—	—	0000
		15:0	WR	WREN	WRERR	LVDERR	LVDSTAT	—	—	—	—	—	—	—	NVMOP<3:0>				0000
F410	NVMKEY	31:16	NVMKEY<31:0>																0000
		15:0																	0000
F420	NVMADDR(1)	31:16	NVMADDR<31:0>																0000
		15:0																	0000
F430	NVMDATA	31:16	NVMDATA<31:0>																0000
		15:0																	0000
F440	NVMSRCADDR	31:16	NVMSRCADDR<31:0>																0000
		15:0																	0000

Legend: x = unknown value on Reset; — = unimplemented, read as ‘0’. Reset values are shown in hexadecimal.

Note 1: This register has corresponding CLR, SET and INV registers at its virtual address, plus offsets of 0x4, 0x8 and 0xC, respectively. See **Section 11.2 “CLR, SET and INV Registers”** for more information.

© 2011-2016 Microchip Technology Inc.

REGISTER 5-1: NVMCON: PROGRAMMING CONTROL REGISTER

Bit Range	Bit 31/23/15/7	Bit 30/22/14/6	Bit 29/21/13/5	Bit 28/20/12/4	Bit 27/19/11/3	Bit 26/18/10/2	Bit 25/17/9/1	Bit 24/16/8/0
31:24	U-0	U-0	U-0	U-0	U-0	U-0	U-0	U-0
	—	—	—	—	—	—	—	—
23:16	U-0	U-0	U-0	U-0	U-0	U-0	U-0	U-0
	—	—	—	—	—	—	—	—
15:8	R/W-0	R/W-0	R-0	R-0	R-0	U-0	U-0	U-0
	WR	WREN	WRERR(1)	LVDERR(1)	LVDSTAT(1)	—	—	—
7:0	U-0	U-0	U-0	U-0	R/W-0	R/W-0	R/W-0	R/W-0
	—	—	—	—	NVMOP<3:0>			

Legend:			
R = Readable bit	W = Writable bit	U = Unimplemented bit, read as ‘0’	
-n = Value at POR	‘1’ = Bit is set	‘0’ = Bit is cleared	x = Bit is unknown

bit 31-16 **Unimplemented:** Read as ‘0’

bit 15 **WR:** Write Control bit

This bit is writable when WREN = 1 and the unlock sequence is followed.

1 = Initiate a Flash operation. Hardware clears this bit when the operation completes
0 = Flash operation is complete or inactive

bit 14 **WREN:** Write Enable bit

This is the only bit in this register reset by a device Reset.

1 = Enable writes to WR bit and enables LVD circuit
0 = Disable writes to WR bit and disables LVD circuit

bit 13 **WRERR:** Write Error bit(1)

This bit is read-only and is automatically set by hardware.

1 = Program or erase sequence did not complete successfully
0 = Program or erase sequence completed normally

bit 12 **LVDERR:** Low-Voltage Detect Error bit (LVD circuit must be enabled)(1)

This bit is read-only and is automatically set by hardware.

1 = Low-voltage detected (possible data corruption, if WRERR is set)
0 = Voltage level is acceptable for programming

bit 11 **LVDSTAT:** Low-Voltage Detect Status bit (LVD circuit must be enabled)(1)

This bit is read-only and is automatically set and cleared by the hardware.

1 = Low-voltage event is active
0 = Low-voltage event is not active

bit 10-4 **Unimplemented:** Read as ‘0’

bit 3-0 **NVMOP<3:0>:** NVM Operation bits

These bits are writable when WREN = 0.

1111 = Reserved
•
•
•
0111 = Reserved
0110 = No operation
0101 = Program Flash Memory (PFM) erase operation: erases PFM, if all pages are not write-protected
0100 = Page erase operation: erases page selected by NVMADDR, if it is not write-protected
0011 = Row program operation: programs row selected by NVMADDR, if it is not write-protected
0010 = No operation
0001 = Word program operation: programs word selected by NVMADDR, if it is not write-protected
0000 = No operation

Note 1: This bit is cleared by setting NVMOP == ‘b0000, and initiating a Flash operation (i.e., WR).

REGISTER 5-2: NVMKEY: PROGRAMMING UNLOCK REGISTER

Bit Range	Bit 31/23/15/7	Bit 30/22/14/6	Bit 29/21/13/5	Bit 28/20/12/4	Bit 27/19/11/3	Bit 26/18/10/2	Bit 25/17/9/1	Bit 24/16/8/0
31:24	W-0	W-0	W-0	W-0	W-0	W-0	W-0	W-0
	NVMKEY<31:24>							
23:16	W-0	W-0	W-0	W-0	W-0	W-0	W-0	W-0
	NVMKEY<23:16>							
15:8	W-0	W-0	W-0	W-0	W-0	W-0	W-0	W-0
	NVMKEY<15:8>							
7:0	W-0	W-0	W-0	W-0	W-0	W-0	W-0	W-0
	NVMKEY<7:0>							

Legend:			
R = Readable bit	W = Writable bit	U = Unimplemented bit, read as ‘0’	
-n = Value at POR	‘1’ = Bit is set	‘0’ = Bit is cleared	x = Bit is unknown

bit 31-0 **NVMKEY<31:0>:** Unlock Register bits
These bits are write-only, and read as ‘0’ on any read

Note: This register is used as part of the unlock sequence to prevent inadvertent writes to the PFM.

REGISTER 5-3: NVMADDR: FLASH ADDRESS REGISTER

Bit Range	Bit 31/23/15/7	Bit 30/22/14/6	Bit 29/21/13/5	Bit 28/20/12/4	Bit 27/19/11/3	Bit 26/18/10/2	Bit 25/17/9/1	Bit 24/16/8/0
31:24	R/W-0	R/W-0	R/W-0	R/W-0	R/W-0	R/W-0	R/W-0	R/W-0
	NVMADDR<31:24>							
23:16	R/W-0	R/W-0	R/W-0	R/W-0	R/W-0	R/W-0	R/W-0	R/W-0
	NVMADDR<23:16>							
15:8	R/W-0	R/W-0	R/W-0	R/W-0	R/W-0	R/W-0	R/W-0	R/W-0
	NVMADDR<15:8>							
7:0	R/W-0	R/W-0	R/W-0	R/W-0	R/W-0	R/W-0	R/W-0	R/W-0
	NVMADDR<7:0>							

Legend:			
R = Readable bit	W = Writable bit	U = Unimplemented bit, read as ‘0’	
-n = Value at POR	‘1’ = Bit is set	‘0’ = Bit is cleared	x = Bit is unknown

bit 31-0 **NVMADDR<31:0>:** Flash Address bits
Bulk/Chip/PFM Erase: Address is ignored.
Page Erase: Address identifies the page to erase.
Row Program: Address identifies the row to program.
Word Program: Address identifies the word to program.

© 2011-2016 Microchip Technology Inc.

REGISTER 5-4: NVMDATA: FLASH PROGRAM DATA REGISTER

Bit Range	Bit 31/23/15/7	Bit 30/22/14/6	Bit 29/21/13/5	Bit 28/20/12/4	Bit 27/19/11/3	Bit 26/18/10/2	Bit 25/17/9/1	Bit 24/16/8/0
31:24	R/W-0	R/W-0	R/W-0	R/W-0	R/W-0	R/W-0	R/W-0	R/W-0
	NVMDATA<31:24>							
23:16	R/W-0	R/W-0	R/W-0	R/W-0	R/W-0	R/W-0	R/W-0	R/W-0
	NVMDATA<23:16>							
15:8	R/W-0	R/W-0	R/W-0	R/W-0	R/W-0	R/W-0	R/W-0	R/W-0
	NVMDATA<15:8>							
7:0	R/W-0	R/W-0	R/W-0	R/W-0	R/W-0	R/W-0	R/W-0	R/W-0
	NVMDATA<7:0>							

Legend:			
R = Readable bit	W = Writable bit	U = Unimplemented bit, read as ‘0’	
-n = Value at POR	‘1’ = Bit is set	‘0’ = Bit is cleared	x = Bit is unknown

bit 31-0 **NVMDATA<31:0>:** Flash Programming Data bits

Note: The bits in this register are only reset by a Power-on Reset (POR).

REGISTER 5-5: NVMSRCADDR: SOURCE DATA ADDRESS REGISTER

Bit Range	Bit 31/23/15/7	Bit 30/22/14/6	Bit 29/21/13/5	Bit 28/20/12/4	Bit 27/19/11/3	Bit 26/18/10/2	Bit 25/17/9/1	Bit 24/16/8/0
31:24	R/W-0	R/W-0	R/W-0	R/W-0	R/W-0	R/W-0	R/W-0	R/W-0
	NVMSRCADDR<31:24>							
23:16	R/W-0	R/W-0	R/W-0	R/W-0	R/W-0	R/W-0	R/W-0	R/W-0
	NVMSRCADDR<23:16>							
15:8	R/W-0	R/W-0	R/W-0	R/W-0	R/W-0	R/W-0	R/W-0	R/W-0
	NVMSRCADDR<15:8>							
7:0	R/W-0	R/W-0	R/W-0	R/W-0	R/W-0	R/W-0	R/W-0	R/W-0
	NVMSRCADDR<7:0>							

Legend:			
R = Readable bit	W = Writable bit	U = Unimplemented bit, read as ‘0’	
-n = Value at POR	‘1’ = Bit is set	‘0’ = Bit is cleared	x = Bit is unknown

bit 31-0 **NVMSRCADDR<31:0>:** Source Data Address bits

The system physical address of the data to be programmed into the Flash when the NVMOP<3:0> bits (NVMCON<3:0>) are set to perform row programming.

NOTES:

© 2011-2016 Microchip Technology Inc.

6.0 RESETS

Note: This data sheet summarizes the features of the PIC32MX1XX/2XX 28/36/44-pin Family of devices. It is not intended to be a comprehensive reference source. To complement the information in this data sheet, refer to **Section 7. "Resets"** (DS60001118), which is available from the *Documentation > Reference Manual* section of the Microchip PIC32 web site (www.microchip.com/pic32).

The Reset module combines all Reset sources and controls the device Master Reset signal, SYSRST. The following is a list of device Reset sources:

- Power-on Reset (POR)
- Master Clear Reset pin ($\overline{\text{MCLR}}$)
- Software Reset (SWR)
- Watchdog Timer Reset (WDTR)
- Brown-out Reset (BOR)
- Configuration Mismatch Reset (CMR)

A simplified block diagram of the Reset module is illustrated in Figure 6-1.

FIGURE 6-1: SYSTEM RESET BLOCK DIAGRAM

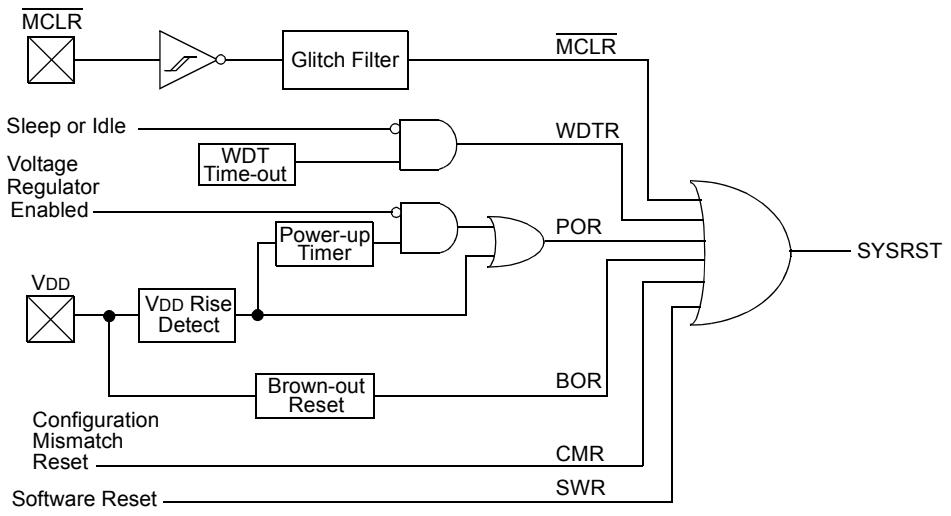

6.1 Reset Control Registers

TABLE 6-1: RESET CONTROL REGISTER MAP

Virtual Address (BF80_#)	Register Name(1)	Bit Range	Bits																All Resets
			31/15	30/14	29/13	28/12	27/11	26/10	25/9	24/8	23/7	22/6	21/5	20/4	19/3	18/2	17/1	16/0	
F600	RCON	31:16	—	—	—	—	—	—	—	—	—	—	—	—	—	—	—	—	0000
		15:0	—	—	—	—	—	—	CMR	VREGS	EXTR	SWR	—	WDTO	SLEEP	IDLE	BOR	POR	xxxx(2)
F610	RSWRST	31:16	—	—	—	—	—	—	—	—	—	—	—	—	—	—	—	—	0000
		15:0	—	—	—	—	—	—	—	—	—	—	—	—	—	—	—	SWRST	0000

Legend: x = unknown value on Reset; — = unimplemented, read as ‘0’. Reset values are shown in hexadecimal.

Note 1: All registers in this table have corresponding CLR, SET and INV registers at their virtual addresses, plus offsets of 0x4, 0x8 and 0xC, respectively. See **Section 11.2 “CLR, SET and INV Registers”** for more information.

2: Reset values are dependent on the DEVCFGx Configuration bits and the type of reset.

© 2011-2016 Microchip Technology Inc.

REGISTER 6-1: RCON: RESET CONTROL REGISTER

Bit Range	Bit 31/23/15/7	Bit 30/22/14/6	Bit 29/21/13/5	Bit 28/20/12/4	Bit 27/19/11/3	Bit 26/18/10/2	Bit 25/17/9/1	Bit 24/16/8/0
31:24	U-0	U-0	U-0	U-0	U-0	U-0	U-0	U-0
	—	—	—	—	—	—	—	—
23:16	U-0	U-0	U-0	U-0	U-0	U-0	U-0	U-0
	—	—	—	—	—	—	—	—
15:8	U-0	U-0	U-0	U-0	U-0	U-0	R/W-0, HS	R/W-0
	—	—	—	—	—	—	CMR	VREGS
7:0	R/W-0, HS	R/W-0, HS	U-0	R/W-0, HS	R/W-0, HS	R/W-0, HS	R/W-1, HS	R/W-1, HS
	EXTR	SWR	—	WDTO	SLEEP	IDLE	BOR(1)	POR(1)

Legend:	HS = Set by hardware		
R = Readable bit	W = Writable bit	U = Unimplemented bit, read as ‘0’	
-n = Value at POR	‘1’ = Bit is set	‘0’ = Bit is cleared	x = Bit is unknown

bit 31-10 **Unimplemented:** Read as ‘0’

bit 9 **CMR:** Configuration Mismatch Reset Flag bit
1 = Configuration mismatch Reset has occurred
0 = Configuration mismatch Reset has not occurred

bit 8 **VREGS:** Voltage Regulator Standby Enable bit
1 = Regulator is enabled and is on during Sleep mode
0 = Regulator is disabled and is off during Sleep mode

bit 7 **EXTR:** External Reset ($\overline{\text{MCLR}}$) Pin Flag bit
1 = Master Clear (pin) Reset has occurred
0 = Master Clear (pin) Reset has not occurred

bit 6 **SWR:** Software Reset Flag bit
1 = Software Reset was executed
0 = Software Reset as not executed

bit 5 **Unimplemented:** Read as ‘0’

bit 4 **WDTO:** Watchdog Timer Time-out Flag bit
1 = WDT Time-out has occurred
0 = WDT Time-out has not occurred

bit 3 **SLEEP:** Wake From Sleep Flag bit
1 = Device was in Sleep mode
0 = Device was not in Sleep mode

bit 2 **IDLE:** Wake From Idle Flag bit
1 = Device was in Idle mode
0 = Device was not in Idle mode

bit 1 **BOR:** Brown-out Reset Flag bit(1)
1 = Brown-out Reset has occurred
0 = Brown-out Reset has not occurred

bit 0 **POR:** Power-on Reset Flag bit(1)
1 = Power-on Reset has occurred
0 = Power-on Reset has not occurred

Note 1: User software must clear this bit to view next detection.

REGISTER 6-2: RSWRST: SOFTWARE RESET REGISTER

Bit Range	Bit 31/23/15/7	Bit 30/22/14/6	Bit 29/21/13/5	Bit 28/20/12/4	Bit 27/19/11/3	Bit 26/18/10/2	Bit 25/17/9/1	Bit 24/16/8/0
31:24	U-0	U-0	U-0	U-0	U-0	U-0	U-0	U-0
	—	—	—	—	—	—	—	—
23:16	U-0	U-0	U-0	U-0	U-0	U-0	U-0	U-0
	—	—	—	—	—	—	—	—
15:8	U-0	U-0	U-0	U-0	U-0	U-0	U-0	U-0
	—	—	—	—	—	—	—	—
7:0	U-0	U-0	U-0	U-0	U-0	U-0	U-0	W-0, HC
	—	—	—	—	—	—	—	SWRST(1)

Legend:	HC = Cleared by hardware		
R = Readable bit	W = Writable bit	U = Unimplemented bit, read as ‘0’	
-n = Value at POR	‘1’ = Bit is set	‘0’ = Bit is cleared	x = Bit is unknown

bit 31-1 **Unimplemented:** Read as ‘0’

bit 0 **SWRST:** Software Reset Trigger bit(1)
1 = Enable Software Reset event
0 = No effect

Note 1: The system unlock sequence must be performed before the SWRST bit is written. Refer to **Section 6. “Oscillator”** (DS60001112) in the *“PIC32 Family Reference Manual”* for details.

© 2011-2016 Microchip Technology Inc.

7.0 INTERRUPT CONTROLLER

Note: This data sheet summarizes the features of the PIC32MX1XX/2XX 28/36/44-pin Family of devices. It is not intended to be a comprehensive reference source. To complement the information in this data sheet, refer to **Section 8. "Interrupt Controller"** (DS60001108), which is available from the *Documentation* > *Reference Manual* section of the Microchip PIC32 web site (www.microchip.com/pic32).

PIC32MX1XX/2XX 28/36/44-pin Family devices generate interrupt requests in response to interrupt events from peripheral modules. The interrupt control module exists externally to the CPU logic and prioritizes the interrupt events before presenting them to the CPU.

The PIC32MX1XX/2XX 28/36/44-pin Family interrupt module includes the following features:

- Up to 64 interrupt sources
- Up to 44 interrupt vectors
- Single and multi-vector mode operations
- Five external interrupts with edge polarity control
- Interrupt proximity timer
- Seven user-selectable priority levels for each vector
- Four user-selectable subpriority levels within each priority
- Software can generate any interrupt
- User-configurable Interrupt Vector Table (IVT) location
- User-configurable interrupt vector spacing

Note: The dedicated shadow register set is not present on PIC32MX1XX/2XX 28/36/44-pin Family devices.

A simplified block diagram of the Interrupt Controller module is illustrated in Figure 7-1.

FIGURE 7-1: INTERRUPT CONTROLLER MODULE BLOCK DIAGRAM

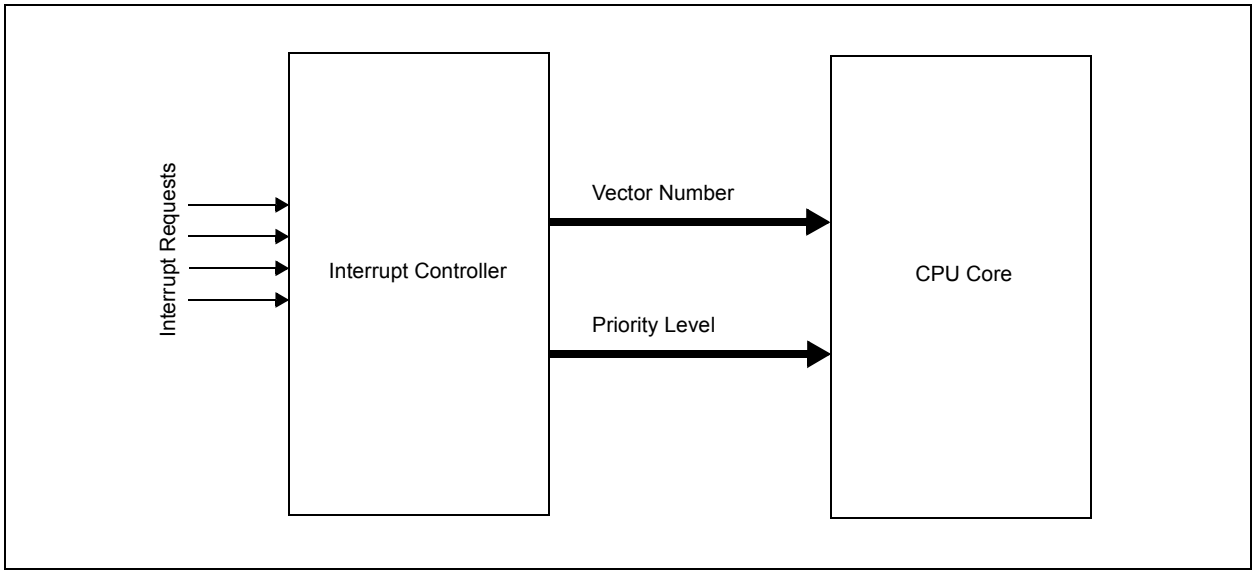

TABLE 7-1: INTERRUPT IRQ, VECTOR AND BIT LOCATION

Interrupt Source(1)	IRQ #	Vector #	Interrupt Bit Location				Persistent Interrupt
			Flag	Enable	Priority	Sub-priority	
Highest Natural Order Priority							
CT – Core Timer Interrupt	0	0	IFS0<0>	IEC0<0>	IPC0<4:2>	IPC0<1:0>	No
CS0 – Core Software Interrupt 0	1	1	IFS0<1>	IEC0<1>	IPC0<12:10>	IPC0<9:8>	No
CS1 – Core Software Interrupt 1	2	2	IFS0<2>	IEC0<2>	IPC0<20:18>	IPC0<17:16>	No
INT0 – External Interrupt	3	3	IFS0<3>	IEC0<3>	IPC0<28:26>	IPC0<25:24>	No
T1 – Timer1	4	4	IFS0<4>	IEC0<4>	IPC1<4:2>	IPC1<1:0>	No
IC1E – Input Capture 1 Error	5	5	IFS0<5>	IEC0<5>	IPC1<12:10>	IPC1<9:8>	Yes
IC1 – Input Capture 1	6	5	IFS0<6>	IEC0<6>	IPC1<12:10>	IPC1<9:8>	Yes
OC1 – Output Compare 1	7	6	IFS0<7>	IEC0<7>	IPC1<20:18>	IPC1<17:16>	No
INT1 – External Interrupt 1	8	7	IFS0<8>	IEC0<8>	IPC1<28:26>	IPC1<25:24>	No
T2 – Timer2	9	8	IFS0<9>	IEC0<9>	IPC2<4:2>	IPC2<1:0>	No
IC2E – Input Capture 2	10	9	IFS0<10>	IEC0<10>	IPC2<12:10>	IPC2<9:8>	Yes
IC2 – Input Capture 2	11	9	IFS0<11>	IEC0<11>	IPC2<12:10>	IPC2<9:8>	Yes
OC2 – Output Compare 2	12	10	IFS0<12>	IEC0<12>	IPC2<20:18>	IPC2<17:16>	No
INT2 – External Interrupt 2	13	11	IFS0<13>	IEC0<13>	IPC2<28:26>	IPC2<25:24>	No
T3 – Timer3	14	12	IFS0<14>	IEC0<14>	IPC3<4:2>	IPC3<1:0>	No
IC3E – Input Capture 3	15	13	IFS0<15>	IEC0<15>	IPC3<12:10>	IPC3<9:8>	Yes
IC3 – Input Capture 3	16	13	IFS0<16>	IEC0<16>	IPC3<12:10>	IPC3<9:8>	Yes
OC3 – Output Compare 3	17	14	IFS0<17>	IEC0<17>	IPC3<20:18>	IPC3<17:16>	No
INT3 – External Interrupt 3	18	15	IFS0<18>	IEC0<18>	IPC3<28:26>	IPC3<25:24>	No
T4 – Timer4	19	16	IFS0<19>	IEC0<19>	IPC4<4:2>	IPC4<1:0>	No
IC4E – Input Capture 4 Error	20	17	IFS0<20>	IEC0<20>	IPC4<12:10>	IPC4<9:8>	Yes
IC4 – Input Capture 4	21	17	IFS0<21>	IEC0<21>	IPC4<12:10>	IPC4<9:8>	Yes
OC4 – Output Compare 4	22	18	IFS0<22>	IEC0<22>	IPC4<20:18>	IPC4<17:16>	No
INT4 – External Interrupt 4	23	19	IFS0<23>	IEC0<23>	IPC4<28:26>	IPC4<25:24>	No
T5 – Timer5	24	20	IFS0<24>	IEC0<24>	IPC5<4:2>	IPC5<1:0>	No
IC5E – Input Capture 5 Error	25	21	IFS0<25>	IEC0<25>	IPC5<12:10>	IPC5<9:8>	Yes
IC5 – Input Capture 5	26	21	IFS0<26>	IEC0<26>	IPC5<12:10>	IPC5<9:8>	Yes
OC5 – Output Compare 5	27	22	IFS0<27>	IEC0<27>	IPC5<20:18>	IPC5<17:16>	No
AD1 – ADC1 Convert done	28	23	IFS0<28>	IEC0<28>	IPC5<28:26>	IPC5<25:24>	Yes
FSCM – Fail-Safe Clock Monitor	29	24	IFS0<29>	IEC0<29>	IPC6<4:2>	IPC6<1:0>	No
RTCC – Real-Time Clock and Calendar	30	25	IFS0<30>	IEC0<30>	IPC6<12:10>	IPC6<9:8>	No
FCE – Flash Control Event	31	26	IFS0<31>	IEC0<31>	IPC6<20:18>	IPC6<17:16>	No
CMP1 – Comparator Interrupt	32	27	IFS1<0>	IEC1<0>	IPC6<28:26>	IPC6<25:24>	No
CMP2 – Comparator Interrupt	33	28	IFS1<1>	IEC1<1>	IPC7<4:2>	IPC7<1:0>	No
CMP3 – Comparator Interrupt	34	29	IFS1<2>	IEC1<2>	IPC7<12:10>	IPC7<9:8>	No
USB – USB Interrupts	35	30	IFS1<3>	IEC1<3>	IPC7<20:18>	IPC7<17:16>	Yes
SPI1E – SPI1 Fault	36	31	IFS1<4>	IEC1<4>	IPC7<28:26>	IPC7<25:24>	Yes
SPI1RX – SPI1 Receive Done	37	31	IFS1<5>	IEC1<5>	IPC7<28:26>	IPC7<25:24>	Yes
SPI1TX – SPI1 Transfer Done	38	31	IFS1<6>	IEC1<6>	IPC7<28:26>	IPC7<25:24>	Yes

Note 1: Not all interrupt sources are available on all devices. See **TABLE 1: "PIC32MX1XX 28/36/44-Pin General Purpose Family Features"** and **TABLE 2: "PIC32MX2XX 28/36/44-pin USB Family Features"** for the lists of available peripherals.

© 2011-2016 Microchip Technology Inc.

TABLE 7-1: INTERRUPT IRQ, VECTOR AND BIT LOCATION (CONTINUED)

Interrupt Source(1)	IRQ #	Vector #	Interrupt Bit Location				Persistent Interrupt
			Flag	Enable	Priority	Sub-priority	
U1E – UART1 Fault	39	32	IFS1<7>	IEC1<7>	IPC8<4:2>	IPC8<1:0>	Yes
U1RX – UART1 Receive Done	40	32	IFS1<8>	IEC1<8>	IPC8<4:2>	IPC8<1:0>	Yes
U1TX – UART1 Transfer Done	41	32	IFS1<9>	IEC1<9>	IPC8<4:2>	IPC8<1:0>	Yes
I2C1B – I2C1 Bus Collision Event	42	33	IFS1<10>	IEC1<10>	IPC8<12:10>	IPC8<9:8>	Yes
I2C1S – I2C1 Slave Event	43	33	IFS1<11>	IEC1<11>	IPC8<12:10>	IPC8<9:8>	Yes
I2C1M – I2C1 Master Event	44	33	IFS1<12>	IEC1<12>	IPC8<12:10>	IPC8<9:8>	Yes
CNA – PORTA Input Change Interrupt	45	34	IFS1<13>	IEC1<13>	IPC8<20:18>	IPC8<17:16>	Yes
CNB – PORTB Input Change Interrupt	46	34	IFS1<14>	IEC1<14>	IPC8<20:18>	IPC8<17:16>	Yes
CNC – PORTC Input Change Interrupt	47	34	IFS1<15>	IEC1<15>	IPC8<20:18>	IPC8<17:16>	Yes
PMP – Parallel Master Port	48	35	IFS1<16>	IEC1<16>	IPC8<28:26>	IPC8<25:24>	Yes
PMPE – Parallel Master Port Error	49	35	IFS1<17>	IEC1<17>	IPC8<28:26>	IPC8<25:24>	Yes
SPI2E – SPI2 Fault	50	36	IFS1<18>	IEC1<18>	IPC9<4:2>	IPC9<1:0>	Yes
SPI2RX – SPI2 Receive Done	51	36	IFS1<19>	IEC1<19>	IPC9<4:2>	IPC9<1:0>	Yes
SPI2TX – SPI2 Transfer Done	52	36	IFS1<20>	IEC1<20>	IPC9<4:2>	IPC9<1:0>	Yes
U2E – UART2 Error	53	37	IFS1<21>	IEC1<21>	IPC9<12:10>	IPC9<9:8>	Yes
U2RX – UART2 Receiver	54	37	IFS1<22>	IEC1<22>	IPC9<12:10>	IPC9<9:8>	Yes
U2TX – UART2 Transmitter	55	37	IFS1<23>	IEC1<23>	IPC9<12:10>	IPC9<9:8>	Yes
I2C2B – I2C2 Bus Collision Event	56	38	IFS1<24>	IEC1<24>	IPC9<20:18>	IPC9<17:16>	Yes
I2C2S – I2C2 Slave Event	57	38	IFS1<25>	IEC1<25>	IPC9<20:18>	IPC9<17:16>	Yes
I2C2M – I2C2 Master Event	58	38	IFS1<26>	IEC1<26>	IPC9<20:18>	IPC9<17:16>	Yes
CTMU – CTMU Event	59	39	IFS1<27>	IEC1<27>	IPC9<28:26>	IPC9<25:24>	Yes
DMA0 – DMA Channel 0	60	40	IFS1<28>	IEC1<28>	IPC10<4:2>	IPC10<1:0>	No
DMA1 – DMA Channel 1	61	41	IFS1<29>	IEC1<29>	IPC10<12:10>	IPC10<9:8>	No
DMA2 – DMA Channel 2	62	42	IFS1<30>	IEC1<30>	IPC10<20:18>	IPC10<17:16>	No
DMA3 – DMA Channel 3	63	43	IFS1<31>	IEC1<31>	IPC10<28:26>	IPC10<25:24>	No
Lowest Natural Order Priority							

Note 1: Not all interrupt sources are available on all devices. See **TABLE 1: "PIC32MX1XX 28/36/44-Pin General Purpose Family Features"** and **TABLE 2: "PIC32MX2XX 28/36/44-pin USB Family Features"** for the lists of available peripherals.

7.1 Interrupt Control Registers

TABLE 7-2: INTERRUPT REGISTER MAP

Virtual Address (BF88_#)	Register Name[1]	Bit Range	Bits 31/15	30/14	29/13	28/12	27/11	26/10	25/9	24/8	23/7	22/6	21/5	20/4	19/3	18/2	17/1	16/0	All Resets
1000	INTCON	31:16	—	—	—	—	—	—	—	—	—	—	—	—	—	—	—	—	0000
		15:0	—	—	—	MVEC	—	TPC<2:0>			—	—	—	INT4EP	INT3EP	INT2EP	INT1EP	INT0EP	0000
1010	INTSTAT[3]	31:16	—	—	—	—	—	—	—	—	—	—	—	—	—	—	—	—	0000
		15:0	—	—	—	—	—	SRIPL<2:0>			—	—	VEC<5:0>						0000
1020	IPTMR	31:16	IPTMR<31:0>																0000
		15:0																	0000
1030	IFS0	31:16	FCEIF	RTCCIF	FSCMIF	AD1IF	OC5IF	IC5IF	IC5EIF	T5IF	INT4IF	OC4IF	IC4IF	IC4EIF	T4IF	INT3IF	OC3IF	IC3IF	0000
		15:0	IC3EIF	T3IF	INT2IF	OC2IF	IC2IF	IC2EIF	T2IF	INT1IF	OC1IF	IC1IF	IC1EIF	T1IF	INT0IF	CS1IF	CS0IF	CTIF	0000
1040	IFS1	31:16	DMA3IF	DMA2IF	DMA1IF	DMA0IF	CTMUIF	I2C2MIF	I2C2SIF	I2C2BIF	U2TXIF	U2RXIF	U2EIF	SPI2TXIF	SPI2RXIF	SPI2EIF	PMPEIF	PMPIF	0000
		15:0	CNCIF	CNBIF	CNAIF	I2C1MIF	I2C1SIF	I2C1BIF	U1TXIF	U1RXIF	U1EIF	SPI1TXIF	SPI1RXIF	SPI1EIF	USBIF[2]	CMP3IF	CMP2IF	CMP1IF	0000
1060	IEC0	31:16	FCEIE	RTCCIE	FSCMIE	AD1IE	OC5IE	IC5IE	IC5EIE	T5IE	INT4IE	OC4IE	IC4IE	IC4EIE	T4IE	INT3IE	OC3IE	IC3IE	0000
		15:0	IC3EIE	T3IE	INT2IE	OC2IE	IC2IE	IC2EIE	T2IE	INT1IE	OC1IE	IC1IE	IC1EIE	T1IE	INT0IE	CS1IE	CS0IE	CTIE	0000
1070	IEC1	31:16	DMA3IE	DMA2IE	DMA1IE	DMA0IE	CTMUIE	I2C2MIE	I2C2SIE	I2C2BIE	U2TXIE	U2RXIE	U2EIE	SPI2TXIE	SPI2RXIE	SPI2EIE	PMPEIE	PMPIE	0000
		15:0	CNCIE	CNBIE	CNAIE	I2C1MIE	I2C1SIE	I2C1BIE	U1TXIE	U1RXIE	U1EIE	SPI1TXIE	SPI1RXIE	SPI1EIE	USBIE[2]	CMP3IE	CMP2IE	CMP1IE	0000
1090	IPC0	31:16	—	—	—	INT0IP<2:0>			INT0IS<1:0>		—	—	—	CS1IP<2:0>			CS1IS<1:0>		0000
		15:0	—	—	—	CS0IP<2:0>			CS0IS<1:0>		—	—	—	CTIP<2:0>			CTIS<1:0>		0000
10A0	IPC1	31:16	—	—	—	INT1IP<2:0>			INT1IS<1:0>		—	—	—	OC1IP<2:0>			OC1IS<1:0>		0000
		15:0	—	—	—	IC1IP<2:0>			IC1IS<1:0>		—	—	—	T1IP<2:0>			T1IS<1:0>		0000
10B0	IPC2	31:16	—	—	—	INT2IP<2:0>			INT2IS<1:0>		—	—	—	OC2IP<2:0>			OC2IS<1:0>		0000
		15:0	—	—	—	IC2IP<2:0>			IC2IS<1:0>		—	—	—	T2IP<2:0>			T2IS<1:0>		0000
10C0	IPC3	31:16	—	—	—	INT3IP<2:0>			INT3IS<1:0>		—	—	—	OC3IP<2:0>			OC3IS<1:0>		0000
		15:0	—	—	—	IC3IP<2:0>			IC3IS<1:0>		—	—	—	T3IP<2:0>			T3IS<1:0>		0000
10D0	IPC4	31:16	—	—	—	INT4IP<2:0>			INT4IS<1:0>		—	—	—	OC4IP<2:0>			OC4IS<1:0>		0000
		15:0	—	—	—	IC4IP<2:0>			IC4IS<1:0>		—	—	—	T4IP<2:0>			T4IS<1:0>		0000
10E0	IPC5	31:16	—	—	—	AD1IP<2:0>			AD1IS<1:0>		—	—	—	OC5IP<2:0>			OC5IS<1:0>		0000
		15:0	—	—	—	IC5IP<2:0>			IC5IS<1:0>		—	—	—	T5IP<2:0>			T5IS<1:0>		0000
10F0	IPC6	31:16	—	—	—	CMP1IP<2:0>			CMP1IS<1:0>		—	—	—	FCEIP<2:0>			FCEIS<1:0>		0000
		15:0	—	—	—	RTCCIP<2:0>			RTCCIS<1:0>		—	—	—	FSCMIP<2:0>			FSCMIS<1:0>		0000

Legend: x = unknown value on Reset; — = unimplemented, read as '0'. Reset values are shown in hexadecimal.

Note 1: With the exception of those noted, all registers in this table have corresponding CLR, SET and INV registers at their virtual addresses, plus offsets of 0x4 0x8 and 0xC, respectively. See **Section 11.2 "CLR, SET and INV Registers"** for more information.

2: These bits are not available on PIC32MX1XX devices.

3: This register does not have associated CLR, SET, INV registers.

© 2011-2016 Microchip Technology Inc.

TABLE 7-2: INTERRUPT REGISTER MAP (CONTINUED)

Virtual Address (BF88_#)	Register Name(1)	Bit Range	Bits																All Resets
			31/15	30/14	29/13	28/12	27/11	26/10	25/9	24/8	23/7	22/6	21/5	20/4	19/3	18/2	17/1	16/0	
1100	IPC7	31:16	—	—	—	SPI1IP<2:0>			SPI1IS<1:0>		—	—	—	USBIP<2:0>(2)			USBIS<1:0>(2)		0000
		15:0	—	—	—	CMP3IP<2:0>			CMP3IS<1:0>		—	—	—	CMP2IP<2:0>			CMP2IS<1:0>		0000
1110	IPC8	31:16	—	—	—	PMPIP<2:0>			PMPIS<1:0>		—	—	—	CNIP<2:0>			CNIS<1:0>		0000
		15:0	—	—	—	I2C1IP<2:0>			I2C1IS<1:0>		—	—	—	U1IP<2:0>			U1IS<1:0>		0000
1120	IPC9	31:16	—	—	—	CTMUIP<2:0>			CTMUIS<1:0>		—	—	—	I2C2IP<2:0>			I2C2IS<1:0>		0000
		15:0	—	—	—	U2IP<2:0>			U2IS<1:0>		—	—	—	SPI2IP<2:0>			SPI2IS<1:0>		0000
1130	IPC10	31:16	—	—	—	DMA3IP<2:0>			DMA3IS<1:0>		—	—	—	DMA2IP<2:0>			DMA2IS<1:0>		0000
		15:0	—	—	—	DMA1IP<2:0>			DMA1IS<1:0>		—	—	—	DMA0IP<2:0>			DMA0IS<1:0>		0000

Legend: x = unknown value on Reset; — = unimplemented, read as '0'. Reset values are shown in hexadecimal.

Note 1: With the exception of those noted, all registers in this table have corresponding CLR, SET and INV registers at their virtual addresses, plus offsets of 0x4 0x8 and 0xC, respectively. See **Section 11.2 "CLR, SET and INV Registers"** for more information.

2: These bits are not available on PIC32MX1XX devices.

3: This register does not have associated CLR, SET, INV registers.

© 2011-2016 Microchip Technology Inc.

REGISTER 7-1: INTCON: INTERRUPT CONTROL REGISTER

Bit Range	Bit 31/23/15/7	Bit 30/22/14/6	Bit 29/21/13/5	Bit 28/20/12/4	Bit 27/19/11/3	Bit 26/18/10/2	Bit 25/17/9/1	Bit 24/16/8/0
31:24	U-0	U-0	U-0	U-0	U-0	U-0	U-0	U-0
	—	—	—	—	—	—	—	—
23:16	U-0	U-0	U-0	U-0	U-0	U-0	U-0	U-0
	—	—	—	—	—	—	—	—
15:8	U-0	U-0	U-0	R/W-0	U-0	R/W-0	R/W-0	R/W-0
	—	—	—	MVEC	—	TPC<2:0>		
7:0	U-0	U-0	U-0	R/W-0	R/W-0	R/W-0	R/W-0	R/W-0
	—	—	—	INT4EP	INT3EP	INT2EP	INT1EP	INT0EP

Legend:			
R = Readable bit	W = Writable bit	U = Unimplemented bit, read as ‘0’	
-n = Value at POR	‘1’ = Bit is set	‘0’ = Bit is cleared	x = Bit is unknown

bit 31-16 **Unimplemented:** Read as ‘0’

bit 15-13 **Unimplemented:** Read as ‘0’

bit 12 **MVEC:** Multi Vector Configuration bit
- 1 = Interrupt controller configured for Multi-vectored mode
- 0 = Interrupt controller configured for Single-vectored mode

bit 11 **Unimplemented:** Read as ‘0’

bit 10-8 **TPC<2:0>:** Interrupt Proximity Timer Control bits
- 111 = Interrupts of group priority 7 or lower start the Interrupt Proximity timer
- 110 = Interrupts of group priority 6 or lower start the Interrupt Proximity timer
- 101 = Interrupts of group priority 5 or lower start the Interrupt Proximity timer
- 100 = Interrupts of group priority 4 or lower start the Interrupt Proximity timer
- 011 = Interrupts of group priority 3 or lower start the Interrupt Proximity timer
- 010 = Interrupts of group priority 2 or lower start the Interrupt Proximity timer
- 001 = Interrupts of group priority 1 start the Interrupt Proximity timer
- 000 = Disables Interrupt Proximity timer

bit 7-5 **Unimplemented:** Read as ‘0’

bit 4 **INT4EP:** External Interrupt 4 Edge Polarity Control bit
- 1 = Rising edge
- 0 = Falling edge

bit 3 **INT3EP:** External Interrupt 3 Edge Polarity Control bit
- 1 = Rising edge
- 0 = Falling edge

bit 2 **INT2EP:** External Interrupt 2 Edge Polarity Control bit
- 1 = Rising edge
- 0 = Falling edge

bit 1 **INT1EP:** External Interrupt 1 Edge Polarity Control bit
- 1 = Rising edge
- 0 = Falling edge

bit 0 **INT0EP:** External Interrupt 0 Edge Polarity Control bit
- 1 = Rising edge
- 0 = Falling edge

© 2011-2016 Microchip Technology Inc.

REGISTER 7-2: INTSTAT: INTERRUPT STATUS REGISTER

Bit Range	Bit 31/23/15/7	Bit 30/22/14/6	Bit 29/21/13/5	Bit 28/20/12/4	Bit 27/19/11/3	Bit 26/18/10/2	Bit 25/17/9/1	Bit 24/16/8/0
31:24	U-0	U-0	U-0	U-0	U-0	U-0	U-0	U-0
	—	—	—	—	—	—	—	—
23:16	U-0	U-0	U-0	U-0	U-0	U-0	U-0	U-0
	—	—	—	—	—	—	—	—
15:8	U-0	U-0	U-0	U-0	U-0	R/W-0	R/W-0	R/W-0
	—	—	—	—	—	SRIPL<2:0>(1)		
7:0	U-0	U-0	R/W-0	R/W-0	R/W-0	R/W-0	R/W-0	R/W-0
	—	—	VEC<5:0>(1)					

Legend:			
R = Readable bit	W = Writable bit	U = Unimplemented bit, read as ‘0’	
-n = Value at POR	‘1’ = Bit is set	‘0’ = Bit is cleared	x = Bit is unknown

bit 31-11 **Unimplemented:** Read as ‘0’

bit 10-8 **SRIPL<2:0>:** Requested Priority Level bits(1)

111-000 = The priority level of the latest interrupt presented to the CPU

bit 7-6 **Unimplemented:** Read as ‘0’

bit 5-0 **VEC<5:0>:** Interrupt Vector bits(1)

11111-00000 = The interrupt vector that is presented to the CPU

Note 1: This value should only be used when the interrupt controller is configured for Single Vector mode.

REGISTER 7-3: IPTMR: INTERRUPT PROXIMITY TIMER REGISTER

Bit Range	Bit 31/23/15/7	Bit 30/22/14/6	Bit 29/21/13/5	Bit 28/20/12/4	Bit 27/19/11/3	Bit 26/18/10/2	Bit 25/17/9/1	Bit 24/16/8/0
31:24	R/W-0	R/W-0	R/W-0	R/W-0	R/W-0	R/W-0	R/W-0	R/W-0
	IPTMR<31:24>							
23:16	R/W-0	R/W-0	R/W-0	R/W-0	R/W-0	R/W-0	R/W-0	R/W-0
	IPTMR<23:16>							
15:8	R/W-0	R/W-0	R/W-0	R/W-0	R/W-0	R/W-0	R/W-0	R/W-0
	IPTMR<15:8>							
7:0	R/W-0	R/W-0	R/W-0	R/W-0	R/W-0	R/W-0	R/W-0	R/W-0
	IPTMR<7:0>							

Legend:			
R = Readable bit	W = Writable bit	U = Unimplemented bit, read as ‘0’	
-n = Value at POR	‘1’ = Bit is set	‘0’ = Bit is cleared	x = Bit is unknown

bit 31-0 **IPTMR<31:0>:** Interrupt Proximity Timer Reload bits
Used by the Interrupt Proximity Timer as a reload value when the Interrupt Proximity timer is triggered by an interrupt event.

REGISTER 7-4: IFSx: INTERRUPT FLAG STATUS REGISTER

Bit Range	Bit 31/23/15/7	Bit 30/22/14/6	Bit 29/21/13/5	Bit 28/20/12/4	Bit 27/19/11/3	Bit 26/18/10/2	Bit 25/17/9/1	Bit 24/16/8/0
31:24	R/W-0	R/W-0	R/W-0	R/W-0	R/W-0	R/W-0	R/W-0	R/W-0
	IFS31	IFS30	IFS29	IFS28	IFS27	IFS26	IFS25	IFS24
23:16	R/W-0	R/W-0	R/W-0	R/W-0	R/W-0	R/W-0	R/W-0	R/W-0
	IFS23	IFS22	IFS21	IFS20	IFS19	IFS18	IFS17	IFS16
15:8	R/W-0	R/W-0	R/W-0	R/W-0	R/W-0	R/W-0	R/W-0	R/W-0
	IFS15	IFS14	IFS13	IFS12	IFS11	IFS10	IFS09	IFS08
7:0	R/W-0	R/W-0	R/W-0	R/W-0	R/W-0	R/W-0	R/W-0	R/W-0
	IFS07	IFS06	IFS05	IFS04	IFS03	IFS02	IFS01	IFS00

Legend:			
R = Readable bit	W = Writable bit	U = Unimplemented bit, read as ‘0’	
-n = Value at POR	‘1’ = Bit is set	‘0’ = Bit is cleared	x = Bit is unknown

bit 31-0 **IFS31-IFS00:** Interrupt Flag Status bits
1 = Interrupt request has occurred
0 = No interrupt request has occurred

Note: This register represents a generic definition of the IFSx register. Refer to Table 7-1 for the exact bit definitions.

REGISTER 7-5: IECx: INTERRUPT ENABLE CONTROL REGISTER

Bit Range	Bit 31/23/15/7	Bit 30/22/14/6	Bit 29/21/13/5	Bit 28/20/12/4	Bit 27/19/11/3	Bit 26/18/10/2	Bit 25/17/9/1	Bit 24/16/8/0
31:24	R/W-0	R/W-0	R/W-0	R/W-0	R/W-0	R/W-0	R/W-0	R/W-0
	IEC31	IEC30	IEC29	IEC28	IEC27	IEC26	IEC25	IEC24
23:16	R/W-0	R/W-0	R/W-0	R/W-0	R/W-0	R/W-0	R/W-0	R/W-0
	IEC23	IEC22	IEC21	IEC20	IEC19	IEC18	IEC17	IEC16
15:8	R/W-0	R/W-0	R/W-0	R/W-0	R/W-0	R/W-0	R/W-0	R/W-0
	IEC15	IEC14	IEC13	IEC12	IEC11	IEC10	IEC09	IEC08
7:0	R/W-0	R/W-0	R/W-0	R/W-0	R/W-0	R/W-0	R/W-0	R/W-0
	IEC07	IEC06	IEC05	IEC04	IEC03	IEC02	IEC01	IEC00

Legend:			
R = Readable bit	W = Writable bit	U = Unimplemented bit, read as ‘0’	
-n = Value at POR	‘1’ = Bit is set	‘0’ = Bit is cleared	x = Bit is unknown

bit 31-0 **IEC31-IEC00:** Interrupt Enable bits
1 = Interrupt is enabled
0 = Interrupt is disabled

Note: This register represents a generic definition of the IECx register. Refer to Table 7-1 for the exact bit definitions.

© 2011-2016 Microchip Technology Inc.

REGISTER 7-6: IPCx: INTERRUPT PRIORITY CONTROL REGISTER

Bit Range	Bit 31/23/15/7	Bit 30/22/14/6	Bit 29/21/13/5	Bit 28/20/12/4	Bit 27/19/11/3	Bit 26/18/10/2	Bit 25/17/9/1	Bit 24/16/8/0
31:24	U-0	U-0	U-0	R/W-0	R/W-0	R/W-0	R/W-0	R/W-0
	—	—	—	IP03<2:0>			IS03<1:0>	
23:16	U-0	U-0	U-0	R/W-0	R/W-0	R/W-0	R/W-0	R/W-0
	—	—	—	IP02<2:0>			IS02<1:0>	
15:8	U-0	U-0	U-0	R/W-0	R/W-0	R/W-0	R/W-0	R/W-0
	—	—	—	IP01<2:0>			IS01<1:0>	
7:0	U-0	U-0	U-0	R/W-0	R/W-0	R/W-0	R/W-0	R/W-0
	—	—	—	IP00<2:0>			IS00<1:0>	

Legend:			
R = Readable bit	W = Writable bit	U = Unimplemented bit, read as ‘0’	
-n = Value at POR	‘1’ = Bit is set	‘0’ = Bit is cleared	x = Bit is unknown

bit 31-29 **Unimplemented:** Read as ‘0’

bit 28-26 **IP03<2:0>:** Interrupt Priority bits
- 111 = Interrupt priority is 7
- •
- •
- •
- 010 = Interrupt priority is 2
- 001 = Interrupt priority is 1
- 000 = Interrupt is disabled

bit 25-24 **IS03<1:0>:** Interrupt Subpriority bits
- 11 = Interrupt subpriority is 3
- 10 = Interrupt subpriority is 2
- 01 = Interrupt subpriority is 1
- 00 = Interrupt subpriority is 0

bit 23-21 **Unimplemented:** Read as ‘0’

bit 20-18 **IP02<2:0>:** Interrupt Priority bits
- 111 = Interrupt priority is 7
- •
- •
- •
- 010 = Interrupt priority is 2
- 001 = Interrupt priority is 1
- 000 = Interrupt is disabled

bit 17-16 **IS02<1:0>:** Interrupt Subpriority bits
- 11 = Interrupt subpriority is 3
- 10 = Interrupt subpriority is 2
- 01 = Interrupt subpriority is 1
- 00 = Interrupt subpriority is 0

bit 15-13 **Unimplemented:** Read as ‘0’

bit 12-10 **IP01<2:0>:** Interrupt Priority bits
- 111 = Interrupt priority is 7
- •
- •
- •
- 010 = Interrupt priority is 2
- 001 = Interrupt priority is 1
- 000 = Interrupt is disabled

Note: This register represents a generic definition of the IPCx register. Refer to Table 7-1 for the exact bit definitions.

REGISTER 7-6: IPCx: INTERRUPT PRIORITY CONTROL REGISTER (CONTINUED)

bit 9-8 **IS01<1:0>:** Interrupt Subpriority bits
- 11 = Interrupt subpriority is 3
- 10 = Interrupt subpriority is 2
- 01 = Interrupt subpriority is 1
- 00 = Interrupt subpriority is 0

bit 7-5 **Unimplemented:** Read as '0'

bit 4-2 **IP00<2:0>:** Interrupt Priority bits
- 111 = Interrupt priority is 7
- .
- .
- .
- 010 = Interrupt priority is 2
- 001 = Interrupt priority is 1
- 000 = Interrupt is disabled

bit 1-0 **IS00<1:0>:** Interrupt Subpriority bits
- 11 = Interrupt subpriority is 3
- 10 = Interrupt subpriority is 2
- 01 = Interrupt subpriority is 1
- 00 = Interrupt subpriority is 0

Note: This register represents a generic definition of the IPCx register. Refer to Table 7-1 for the exact bit definitions.

© 2011-2016 Microchip Technology Inc.

8.0 OSCILLATOR CONFIGURATION

Note: This data sheet summarizes the features of the PIC32MX1XX/2XX 28/36/44-pin Family of devices. It is not intended to be a comprehensive reference source. To complement the information in this data sheet, refer to **Section 6. "Oscillator Configuration"** (DS60001112), which is available from the *Documentation > Reference Manual* section of the Microchip PIC32 web site (www.microchip.com/pic32).

The PIC32MX1XX/2XX 28/36/44-pin Family oscillator system has the following modules and features:

- Four external and internal oscillator options as clock sources
- On-Chip PLL with user-selectable input divider, multiplier and output divider to boost operating frequency on select internal and external oscillator sources
- On-Chip user-selectable divisor postscaler on select oscillator sources
- Software-controllable switching between various clock sources
- A Fail-Safe Clock Monitor (FSCM) that detects clock failure and permits safe application recovery or shutdown
- Dedicated On-Chip PLL for USB peripheral

A block diagram of the oscillator system is provided in Figure 8-1.

FIGURE 8-1: OSCILLATOR DIAGRAM

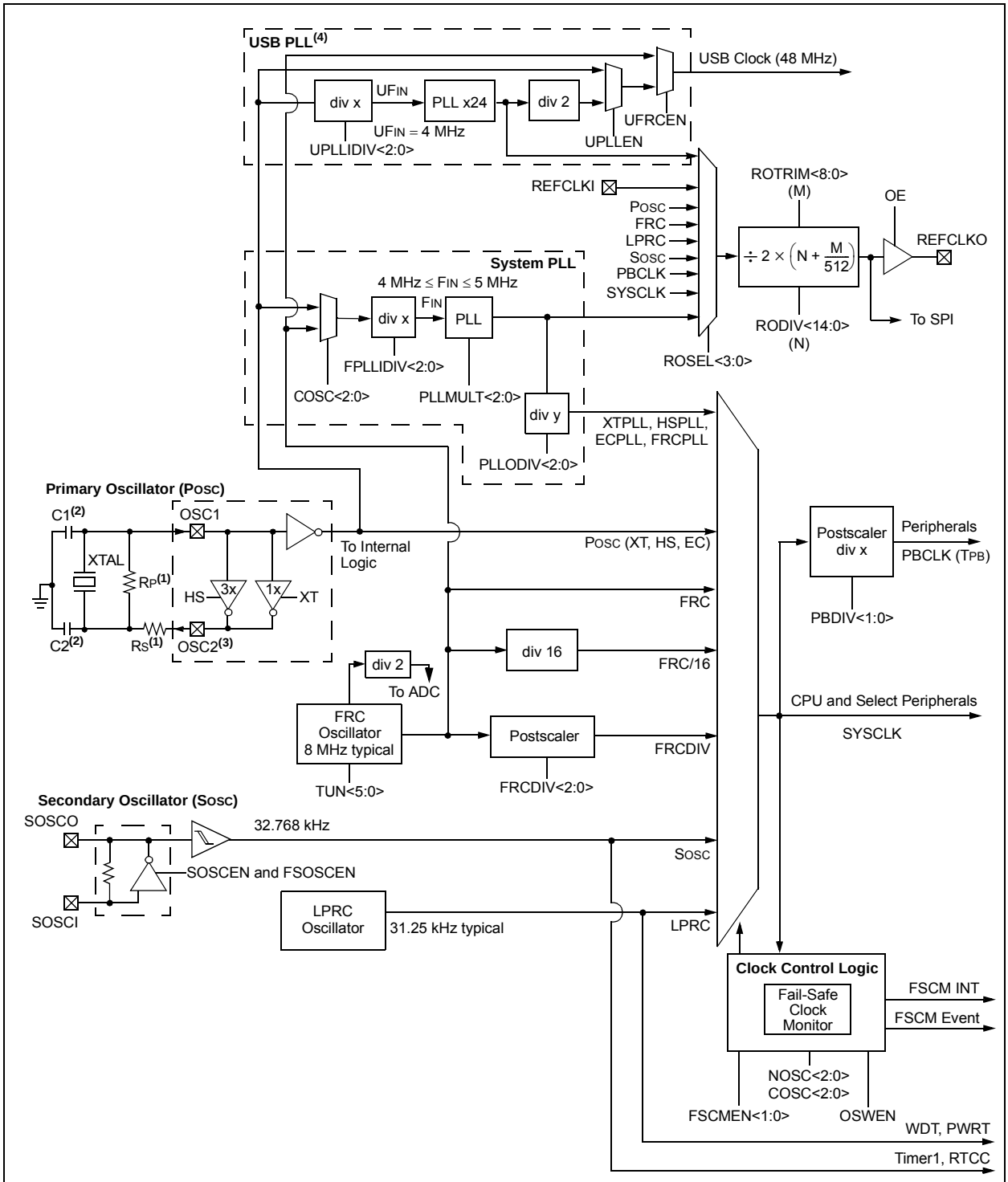

Notes:
1. A series resistor, R_S, may be required for AT strip cut crystals or eliminate clipping. Alternately, to increase oscillator circuit gain, add a parallel resistor, R_P, with a value of 1 MΩ.
2. Refer to **Section 6. "Oscillator Configuration"** (DS60001112) in the "*PIC32 Family Reference Manual*" for help in determining the best oscillator components.
3. The PBCLK out is only available on the OSC2 pin in certain clock modes.
4. The USB PLL is only available on PIC32MX2XX devices.

© 2011-2016 Microchip Technology Inc.

8.1 Oscillator Control Regiters

TABLE 8-1: OSCILLATOR CONTROL REGISTER MAP

Virtual Address (BF80_#)	Register Name[1]	Bit Range	Bits																All Resets
			31/15	30/14	29/13	28/12	27/11	26/10	25/9	24/8	23/7	22/6	21/5	20/4	19/3	18/2	17/1	16/0	
F000	OSCCON	31:16	—	—	PLLODIV<2:0>			FRCDIV<2:0>			—	SOSCRDY	PBDIVRDY	PBDIV<1:0>		PLLMULT<2:0>			x1xx[2]
		15:0	—	COSC<2:0>			—	NOSC<2:0>			CLKLOCK	ULOCK[3]	SLOCK	SLPEN	CF	UFRCEN[3]	SOSCEN	OSWEN	xxxx[2]
F010	OSCTUN	31:16	—	—	—	—	—	—	—	—	—	—	—	—	—	—	—	—	0000
		15:0	—	—	—	—	—	—	—	—	—	—	TUN<5:0>						0000
F020	REFOCON	31:16	—	RODIV<14:0>															0000
		15:0	ON	—	SIDL	OE	RSLP	—	DIVSWEN	ACTIVE	—	—	—	—	ROSEL<3:0>				0000
F030	REFOTRIM	31:16	ROTRIM<8:0>									—	—	—	—	—	—	—	0000
		15:0	—	—	—	—	—	—	—	—	—	—	—	—	—	—	—	—	0000

Legend: x = unknown value on Reset; — = unimplemented, read as '0'. Reset values are shown in hexadecimal.

Note 1: All registers in this table have corresponding CLR, SET and INV registers at their virtual addresses, plus offsets of 0x4, 0x8 and 0xC, respectively. See **Section 11.2 "CLR, SET and INV Registers"** for more information.

2: Reset values are dependent on the DEVCFGx Configuration bits and the type of reset.

3: This bit is only available on PIC32MX2XX devices.

© 2011-2016 Microchip Technology Inc.

REGISTER 8-1: OSCCON: OSCILLATOR CONTROL REGISTER

Bit Range	Bit 31/23/15/7	Bit 30/22/14/6	Bit 29/21/13/5	Bit 28/20/12/4	Bit 27/19/11/3	Bit 26/18/10/2	Bit 25/17/9/1	Bit 24/16/8/0
31:24	U-0	U-0	R/W-y	R/W-y	R/W-y	R/W-0	R/W-0	R/W-1
	—	—	PLLODIV<2:0>			FRCDIV<2:0>		
23:16	U-0	R-0	R-1	R/W-y	R/W-y	R/W-y	R/W-y	R/W-y
	—	SOSCRDY	PBDIVRDY	PBDIV<1:0>		PLLMULT<2:0>		
15:8	U-0	R-0	R-0	R-0	U-0	R/W-y	R/W-y	R/W-y
	—	COSC<2:0>			—	NOSC<2:0>		
7:0	R/W-0	R-0	R-0	R/W-0	R/W-0	R/W-0	R/W-y	R/W-0
	CLKLOCK	ULOCK(1)	SLOCK	SLPEN	CF	UFRCEN(1)	SOSCEN	OSWEN

Legend:	y = Value set from Configuration bits on POR		
R = Readable bit	W = Writable bit	U = Unimplemented bit, read as ‘0’	
-n = Value at POR	‘1’ = Bit is set	‘0’ = Bit is cleared	x = Bit is unknown

bit 31-30 **Unimplemented:** Read as ‘0’

bit 29-27 **PLLODIV<2:0>:** Output Divider for PLL
- 111 = PLL output divided by 256
- 110 = PLL output divided by 64
- 101 = PLL output divided by 32
- 100 = PLL output divided by 16
- 011 = PLL output divided by 8
- 010 = PLL output divided by 4
- 001 = PLL output divided by 2
- 000 = PLL output divided by 1

bit 26-24 **FRCDIV<2:0>:** Internal Fast RC (FRC) Oscillator Clock Divider bits
- 111 = FRC divided by 256
- 110 = FRC divided by 64
- 101 = FRC divided by 32
- 100 = FRC divided by 16
- 011 = FRC divided by 8
- 010 = FRC divided by 4
- 001 = FRC divided by 2 (default setting)
- 000 = FRC divided by 1

bit 23 **Unimplemented:** Read as ‘0’

bit 22 **SOSCRDY:** Secondary Oscillator (SOSC) Ready Indicator bit
- 1 = The Secondary Oscillator is running and is stable
- 0 = The Secondary Oscillator is still warming up or is turned off

bit 21 **PBDIVRDY:** Peripheral Bus Clock (PBCLK) Divisor Ready bit
- 1 = PBDIV<1:0> bits can be written
- 0 = PBDIV<1:0> bits cannot be written

bit 20-19 **PBDIV<1:0>:** Peripheral Bus Clock (PBCLK) Divisor bits
- 11 = PBCLK is SYSCLK divided by 8 (default)
- 10 = PBCLK is SYSCLK divided by 4
- 01 = PBCLK is SYSCLK divided by 2
- 00 = PBCLK is SYSCLK divided by 1

Note 1: This bit is only available on PIC32MX2XX devices.

Note: Writes to this register require an unlock sequence. Refer to **Section 6. “Oscillator”** (DS60001112) in the *“PIC32 Family Reference Manual”* for details.

© 2011-2016 Microchip Technology Inc.

REGISTER 8-1: OSCCON: OSCILLATOR CONTROL REGISTER

bit 18-16 **PLLMULT<2:0>:** Phase-Locked Loop (PLL) Multiplier bits

111 = Clock is multiplied by 24
110 = Clock is multiplied by 21
101 = Clock is multiplied by 20
100 = Clock is multiplied by 19
011 = Clock is multiplied by 18
010 = Clock is multiplied by 17
001 = Clock is multiplied by 16
000 = Clock is multiplied by 15

bit 15 **Unimplemented:** Read as '0'

bit 14-12 **COSC<2:0>:** Current Oscillator Selection bits

111 = Internal Fast RC (FRC) Oscillator divided by FRCDIV<2:0> bits (OSCCON<26:24>)
110 = Internal Fast RC (FRC) Oscillator divided by 16
101 = Internal Low-Power RC (LPRC) Oscillator
100 = Secondary Oscillator (SOSC)
011 = Primary Oscillator (POSC) with PLL module (XTPLL, HSPLL or ECPLL)
010 = Primary Oscillator (POSC) (XT, HS or EC)
001 = Internal Fast RC Oscillator with PLL module via Postscaler (FRCPLL)
000 = Internal Fast RC (FRC) Oscillator

bit 11 **Unimplemented:** Read as '0'

bit 10-8 **NOSC<2:0>:** New Oscillator Selection bits

111 = Internal Fast RC Oscillator (FRC) divided by OSCCON<FRCDIV> bits
110 = Internal Fast RC Oscillator (FRC) divided by 16
101 = Internal Low-Power RC (LPRC) Oscillator
100 = Secondary Oscillator (SOSC)
011 = Primary Oscillator with PLL module (XTPLL, HSPLL or ECPLL)
010 = Primary Oscillator (XT, HS or EC)
001 = Internal Fast Internal RC Oscillator with PLL module via Postscaler (FRCPLL)
000 = Internal Fast Internal RC Oscillator (FRC)

On Reset, these bits are set to the value of the FNOSC Configuration bits (DEVCFG1<2:0>).

bit 7 **CLKLOCK:** Clock Selection Lock Enable bit

If clock switching and monitoring is disabled (FCKSM<1:0> = 1x):
1 = Clock and PLL selections are locked
0 = Clock and PLL selections are not locked and may be modified

If clock switching and monitoring is enabled (FCKSM<1:0> = 0x):
Clock and PLL selections are never locked and may be modified.

bit 6 **ULOCK:** USB PLL Lock Status bit(1)

1 = The USB PLL module is in lock or USB PLL module start-up timer is satisfied
0 =The USB PLL module is out of lock or USB PLL module start-up timer is in progress or the USB PLL is disabled

bit 5 **SLOCK:** PLL Lock Status bit

1 = The PLL module is in lock or PLL module start-up timer is satisfied
0 = The PLL module is out of lock, the PLL start-up timer is running, or the PLL is disabled

bit 4 **SLPEN:** Sleep Mode Enable bit

1 = The device will enter Sleep mode when a WAIT instruction is executed
0 = The device will enter Idle mode when a WAIT instruction is executed

Note 1: This bit is only available on PIC32MX2XX devices.

Note: Writes to this register require an unlock sequence. Refer to **Section 6. "Oscillator"** (DS60001112) in the *"PIC32 Family Reference Manual"* for details.

REGISTER 8-1: OSCCON: OSCILLATOR CONTROL REGISTER

bit 3 **CF:** Clock Fail Detect bit

1 = FSCM has detected a clock failure
0 = No clock failure has been detected

bit 2 **UFRCEN:** USB FRC Clock Enable bit(1)

1 = Enable the FRC as the clock source for the USB clock source
0 = Use the Primary Oscillator or USB PLL as the USB clock source

bit 1 **SOSCEN:** Secondary Oscillator (SOSC) Enable bit

1 = Enable the Secondary Oscillator
0 = Disable the Secondary Oscillator

bit 0 **OSWEN:** Oscillator Switch Enable bit

1 = Initiate an oscillator switch to selection specified by NOSC<2:0> bits
0 = Oscillator switch is complete

Note 1: This bit is only available on PIC32MX2XX devices.

Note: Writes to this register require an unlock sequence. Refer to **Section 6. "Oscillator"** (DS60001112) in the *"PIC32 Family Reference Manual"* for details.

© 2011-2016 Microchip Technology Inc.

REGISTER 8-2: OSCTUN: FRC TUNING REGISTER

Bit Range	Bit 31/23/15/7	Bit 30/22/14/6	Bit 29/21/13/5	Bit 28/20/12/4	Bit 27/19/11/3	Bit 26/18/10/2	Bit 25/17/9/1	Bit 24/16/8/0
31:24	U-0	U-0	U-0	U-0	U-0	U-0	U-0	U-0
	—	—	—	—	—	—	—	—
23:16	U-0	R-0	U-0	U-0	U-0	U-0	U-0	U-0
	—	—	—	—	—	—	—	—
15:8	U-0	R-0	U-0	U-0	U-0	U-0	U-0	U-0
	—	—	—	—	—	—	—	—
7:0	U-0	U-0	R/W-0	R/W-0	R/W-0	R/W-0	R/W-0	R/W-0
	—	—	TUN<5:0>(1)					

Legend:			
R = Readable bit	W = Writable bit	U = Unimplemented bit, read as ‘0’	
-n = Value at POR	‘1’ = Bit is set	‘0’ = Bit is cleared	x = Bit is unknown

bit 31-6 **Unimplemented:** Read as ‘0’

bit 5-0 **TUN<5:0>:** FRC Oscillator Tuning bits(1)

100000 = Center frequency -12.5%
100001 =
•
•
•
111111 =
000000 = Center frequency. Oscillator runs at minimal frequency (8 MHz)
000001 =
•
•
•
011110 =
011111 = Center frequency +12.5%

Note 1: OSCTUN functionality has been provided to help customers compensate for temperature effects on the FRC frequency over a wide range of temperatures. The tuning step size is an approximation, and is neither characterized, nor tested.

Note: Writes to this register require an unlock sequence. Refer to **Section 6. “Oscillator”** (DS60001112) in the *“PIC32 Family Reference Manual”* for details.

REGISTER 8-3: REFOCON: REFERENCE OSCILLATOR CONTROL REGISTER

Bit Range	Bit 31/23/15/7	Bit 30/22/14/6	Bit 29/21/13/5	Bit 28/20/12/4	Bit 27/19/11/3	Bit 26/18/10/2	Bit 25/17/9/1	Bit 24/16/8/0
31:24	U-0	R/W-0	R/W-0	R/W-0	R/W-0	R/W-0	R/W-0	R/W-0
	—	RODIV<14:8>(1,3)						
23:16	R/W-0	R/W-0	R/W-0	R/W-0	R/W-0	R/W-0	R/W-0	R/W-0
	RODIV<7:0>(1,3)							
15:8	R/W-0	U-0	R/W-0	R/W-0	R/W-0	U-0	R/W-0, HC	R-0, HS, HC
	ON	—	SIDL	OE	RSLP(2)	—	DIVSWEN	ACTIVE
7:0	U-0	U-0	U-0	U-0	R/W-0	R/W-0	R/W-0	R/W-0
	—	—	—	—	ROSEL<3:0>(1)			

Legend:	HC = Hardware Clearable	HS = Hardware Settable	
R = Readable bit	W = Writable bit	U = Unimplemented bit, read as ‘0’	
-n = Value at POR	‘1’ = Bit is set	‘0’ = Bit is cleared	x = Bit is unknown

bit 31 **Unimplemented:** Read as ‘0’

bit 30-16 **RODIV<14:0>** Reference Clock Divider bits(1,3)

The value selects the reference clock divider bits. See Figure 8-1 for information.

bit 15 **ON:** Output Enable bit

1 = Reference Oscillator module is enabled
0 = Reference Oscillator module is disabled

bit 14 **Unimplemented:** Read as ‘0’

bit 13 **SIDL:** Peripheral Stop in Idle Mode bit

1 = Discontinue module operation when the device enters Idle mode
0 = Continue module operation when the device enters Idle mode

bit 12 **OE:** Reference Clock Output Enable bit

1 = Reference clock is driven out on REFCLKO pin
0 = Reference clock is not driven out on REFCLKO pin

bit 11 **RSLP:** Reference Oscillator Module Run in Sleep bit(2)

1 = Reference Oscillator module output continues to run in Sleep
0 = Reference Oscillator module output is disabled in Sleep

bit 10 **Unimplemented:** Read as ‘0’

bit 9 **DIVSWEN:** Divider Switch Enable bit

1 = Divider switch is in progress
0 = Divider switch is complete

bit 8 **ACTIVE:** Reference Clock Request Status bit

1 = Reference clock request is active
0 = Reference clock request is not active

bit 7-4 **Unimplemented:** Read as ‘0’

Note 1: The ROSEL and RODIV bits should not be written while the ACTIVE bit is ‘1’, as undefined behavior may result.

2: This bit is ignored when the ROSEL<3:0> bits = 0000 or 0001.

3: While the ON bit is set to ‘1’, writes to these bits do not take effect until the DIVSWEN bit is also set to ’1’.

© 2011-2016 Microchip Technology Inc.

REGISTER 8-3: REFOCON: REFERENCE OSCILLATOR CONTROL REGISTER

bit 3-0 **ROSEL<3:0>:** Reference Clock Source Select bits(1)

1111 = Reserved; do not use
•
•
•
1001 = Reserved; do not use
1000 = REFCLKI
0111 = System PLL output
0110 = USB PLL output
0101 = SOSC
0100 = LPRC
0011 = FRC
0010 = POSC
0001 = PBCLK
0000 = SYSCLK

Note 1: The ROSEL and RODIV bits should not be written while the ACTIVE bit is '1', as undefined behavior may result.

2: This bit is ignored when the ROSEL<3:0> bits = 0000 or 0001.

3: While the ON bit is set to '1', writes to these bits do not take effect until the DIVSWEN bit is also set to '1'.

REGISTER 8-4: REFOTRIM: REFERENCE OSCILLATOR TRIM REGISTER

Bit Range	Bit 31/23/15/7	Bit 30/22/14/6	Bit 29/21/13/5	Bit 28/20/12/4	Bit 27/19/11/3	Bit 26/18/10/2	Bit 25/17/9/1	Bit 24/16/8/0
31:24	R/W-0	R/W-0	R/W-0	R/W-0	R/W-0	R/W-0	R/W-0	R/W-0
	ROTRIM<8:1>							
23:16	R/W-0	R-0	U-0	U-0	U-0	U-0	U-0	U-0
	ROTRIM<0>	—	—	—	—	—	—	—
15:8	U-0	R-0	U-0	U-0	U-0	U-0	U-0	U-0
	—	—	—	—	—	—	—	—
7:0	U-0	U-0	U-0	U-0	U-0	U-0	U-0	U-0
	—	—	—	—	—	—	—	—

Legend:			
R = Readable bit	W = Writable bit	U = Unimplemented bit, read as ‘0’	
-n = Value at POR	‘1’ = Bit is set	‘0’ = Bit is cleared	x = Bit is unknown

bit 31-23 **ROTRIM<8:0>:** Reference Oscillator Trim bits

`111111111` = 511/512 divisor added to RODIV value
`111111110` = 510/512 divisor added to RODIV value
•
•
•
`100000000` = 256/512 divisor added to RODIV value
•
•
•
`000000010` = 2/512 divisor added to RODIV value
`000000001` = 1/512 divisor added to RODIV value
`000000000` = 0/512 divisor added to RODIV value

bit 22-0 **Unimplemented:** Read as ‘`0`’

Note: While the ON (REFOCON<15>) bit is ‘`1`’, writes to this register do not take effect until the DIVSWEN bit is also set to ‘`1`’.

© 2011-2016 Microchip Technology Inc.

9.0 DIRECT MEMORY ACCESS (DMA) CONTROLLER

Note: This data sheet summarizes the features of the PIC32MX1XX/2XX 28/36/44-pin Family of devices. It is not intended to be a comprehensive reference source. To complement the information in this data sheet, refer to **Section 31. "Direct Memory Access (DMA) Controller"** (DS60001117), which is available from the *Documentation > Reference Manual* section of the Microchip PIC32 web site (www.microchip.com/pic32).

The PIC32 Direct Memory Access (DMA) controller is a bus master module useful for data transfers between different devices without CPU intervention. The source and destination of a DMA transfer can be any of the memory mapped modules existent in the PIC32, such as Peripheral Bus devices: SPI, UART, PMP, etc., or memory itself. Figure 9-1 show a block diagram of the DMA Controller module.

The DMA Controller module has the following key features:

- Four identical channels, each featuring:
  - Auto-increment source and destination address registers
  - Source and destination pointers
  - Memory to memory and memory to peripheral transfers
- Automatic word-size detection:
  - Transfer granularity, down to byte level
  - Bytes need not be word-aligned at source and destination
- Fixed priority channel arbitration
- Flexible DMA channel operating modes:
  - Manual (software) or automatic (interrupt) DMA requests
  - One-Shot or Auto-Repeat Block Transfer modes
  - Channel-to-channel chaining
- Flexible DMA requests:
  - A DMA request can be selected from any of the peripheral interrupt sources
  - Each channel can select any (appropriate) observable interrupt as its DMA request source
  - A DMA transfer abort can be selected from any of the peripheral interrupt sources
  - Pattern (data) match transfer termination
- Multiple DMA channel status interrupts:
  - DMA channel block transfer complete
  - Source empty or half empty
  - Destination full or half full
  - DMA transfer aborted due to an external event
  - Invalid DMA address generated
- DMA debug support features:
  - Most recent address accessed by a DMA channel
  - Most recent DMA channel to transfer data
- CRC Generation module:
  - CRC module can be assigned to any of the available channels
  - CRC module is highly configurable

FIGURE 9-1: DMA BLOCK DIAGRAM

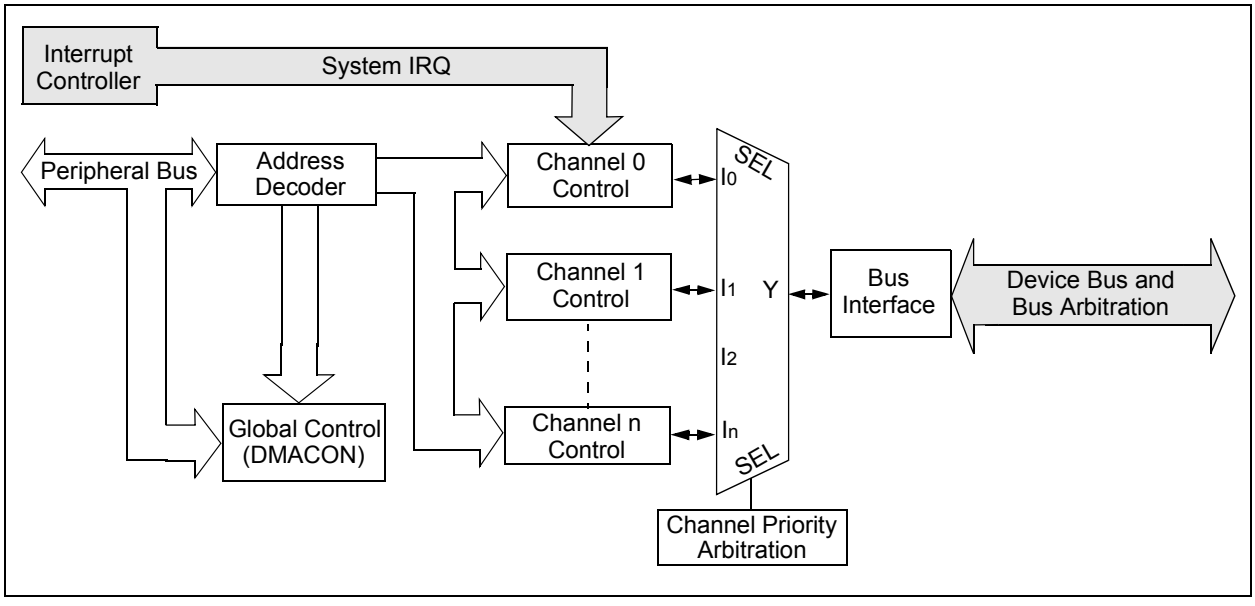

9.1 DMA Control Registers

TABLE 9-1: DMA GLOBAL REGISTER MAP

Virtual Address (BF88_#)	Register Name(1)	Bit Range	Bits 31/15	30/14	29/13	28/12	27/11	26/10	25/9	24/8	23/7	22/6	21/5	20/4	19/3	18/2	17/1	16/0	All Resets
3000	DMACON	31:16	—	—	—	—	—	—	—	—	—	—	—	—	—	—	—	—	0000
		15:0	ON	—	—	SUSPEND	DMABUSY	—	—	—	—	—	—	—	—	—	—	—	0000
3010	DMASTAT	31:16	—	—	—	—	—	—	—	—	—	—	—	—	—	—	—	—	0000
		15:0	—	—	—	—	—	—	—	—	—	—	—	—	RDWR	DMACH<2:0>(2)			0000
3020	DMAADDR	31:16	DMAADDR<31:0>																0000
		15:0																	0000

Legend: x = unknown value on Reset; — = unimplemented, read as ‘0’. Reset values are shown in hexadecimal.

Note 1: All registers in this table have corresponding CLR, SET and INV registers at its virtual address, plus an offset of 0x4, 0x8 and 0xC, respectively. See **Section 11.2 “CLR, SET and INV Registers”** for more information.

TABLE 9-2: DMA CRC REGISTER MAP

Virtual Address (BF88_#)	Register Name(1)	Bit Range	Bits 31/15	30/14	29/13	28/12	27/11	26/10	25/9	24/8	23/7	22/6	21/5	20/4	19/3	18/2	17/1	16/0	All Resets
3030	DCRCCON	31:16	—	—	BYTO<1:0>		WBO	—	—	BITO	—	—	—	—	—	—	—	—	0000
		15:0	—	—	—	PLEN<4:0>					CRCEN	CRCAPP	CRCTYP	—	—	CRCCH<2:0>			0000
3040	DCRCDATA	31:16	DCRCDATA<31:0>																0000
		15:0																	0000
3050	DCRCXOR	31:16	DCRCXOR<31:0>																0000
		15:0																	0000

Legend: x = unknown value on Reset; — = unimplemented, read as ‘0’. Reset values are shown in hexadecimal.

Note 1: All registers in this table have corresponding CLR, SET and INV registers at their virtual addresses, plus offsets of 0x4, 0x8 and 0xC, respectively. See **Section 11.2 “CLR, SET and INV Registers”** for more information.

© 2011-2016 Microchip Technology Inc.

TABLE 9-3: DMA CHANNELS 0-3 REGISTER MAP

Virtual Address (BF88_#)	Register Name(1)	Bit Range	Bits 31/15	30/14	29/13	28/12	27/11	26/10	25/9	24/8	23/7	22/6	21/5	20/4	19/3	18/2	17/1	16/0	All Resets
3060	DCH0CON	31:16	—	—	—	—	—	—	—	—	—	—	—	—	—	—	—	—	0000
		15:0	CHBUSY	—	—	—	—	—	—	CHCHNS	CHEN	CHAED	CHCHN	CHAEN	—	CHEDET	CHPRI<1:0>		0000
3070	DCH0ECON	31:16	—	—	—	—	—	—	—	—	CHAIRQ<7:0>								00FF
		15:0	CHSIRQ<7:0>								CFORCE	CABORT	PATEN	SIRQEN	AIRQEN	—	—	—	FF00
3080	DCH0INT	31:16	—	—	—	—	—	—	—	—	CHSDIE	CHSHIE	CHDDIE	CHDHIE	CHBCIE	CHCCIE	CHTAIE	CHERIE	0000
		15:0	—	—	—	—	—	—	—	—	CHSDIF	CHSHIF	CHDDIF	CHDHIF	CHBCIF	CHCCIF	CHTAIF	CHERIF	0000
3090	DCH0SSA	31:16	CHSSA<31:0>																0000
		15:0																	0000
30A0	DCH0DSA	31:16	CHDSA<31:0>																0000
		15:0																	0000
30B0	DCH0SSIZ	31:16	—	—	—	—	—	—	—	—	—	—	—	—	—	—	—	—	0000
		15:0	CHSSIZ<15:0>																0000
30C0	DCH0DSIZ	31:16	—	—	—	—	—	—	—	—	—	—	—	—	—	—	—	—	0000
		15:0	CHDSIZ<15:0>																0000
30D0	DCH0SPTR	31:16	—	—	—	—	—	—	—	—	—	—	—	—	—	—	—	—	0000
		15:0	CHSPTR<15:0>																0000
30E0	DCH0DPTR	31:16	—	—	—	—	—	—	—	—	—	—	—	—	—	—	—	—	0000
		15:0	CHDPTR<15:0>																0000
30F0	DCH0CSIZ	31:16	—	—	—	—	—	—	—	—	—	—	—	—	—	—	—	—	0000
		15:0	CHCSIZ<15:0>																0000
3100	DCH0CPTR	31:16	—	—	—	—	—	—	—	—	—	—	—	—	—	—	—	—	0000
		15:0	CHCPTR<15:0>																0000
3110	DCH0DAT	31:16	—	—	—	—	—	—	—	—	—	—	—	—	—	—	—	—	0000
		15:0	—	—	—	—	—	—	—	—	CHPDAT<7:0>								0000
3120	DCH1CON	31:16	—	—	—	—	—	—	—	—	—	—	—	—	—	—	—	—	0000
		15:0	CHBUSY	—	—	—	—	—	—	CHCHNS	CHEN	CHAED	CHCHN	CHAEN	—	CHEDET	CHPRI<1:0>		0000
3130	DCH1ECON	31:16	—	—	—	—	—	—	—	—	CHAIRQ<7:0>								00FF
		15:0	CHSIRQ<7:0>								CFORCE	CABORT	PATEN	SIRQEN	AIRQEN	—	—	—	FF00
3140	DCH1INT	31:16	—	—	—	—	—	—	—	—	CHSDIE	CHSHIE	CHDDIE	CHDHIE	CHBCIE	CHCCIE	CHTAIE	CHERIE	0000
		15:0	—	—	—	—	—	—	—	—	CHSDIF	CHSHIF	CHDDIF	CHDHIF	CHBCIF	CHCCIF	CHTAIF	CHERIF	0000
3150	DCH1SSA	31:16	CHSSA<31:0>																0000
		15:0																	0000
3160	DCH1DSA	31:16	CHDSA<31:0>																0000
		15:0																	0000

Legend: x = unknown value on Reset; — = unimplemented, read as '0'. Reset values are shown in hexadecimal.

Note 1: All registers in this table have corresponding CLR, SET and INV registers at their virtual addresses, plus offsets of 0x4, 0x8 and 0xC, respectively. See **Section 11.2 "CLR, SET and INV Registers"** for more information.

© 2011-2016 Microchip Technology Inc.

TABLE 9-3: DMA CHANNELS 0-3 REGISTER MAP (CONTINUED)

Virtual Address (BF88_#)	Register Name(1)	Bit Range	Bits 31/15	30/14	29/13	28/12	27/11	26/10	25/9	24/8	23/7	22/6	21/5	20/4	19/3	18/2	17/1	16/0	All Resets
3170	DCH1SSIZ	31:16	—	—	—	—	—	—	—	—	—	—	—	—	—	—	—	—	0000
		15:0	CHSSIZ<15:0>																0000
3180	DCH1DSIZ	31:16	—	—	—	—	—	—	—	—	—	—	—	—	—	—	—	—	0000
		15:0	CHDSIZ<15:0>																0000
3190	DCH1SPTR	31:16	—	—	—	—	—	—	—	—	—	—	—	—	—	—	—	—	0000
		15:0	CHSPTR<15:0>																0000
31A0	DCH1DPTR	31:16	—	—	—	—	—	—	—	—	—	—	—	—	—	—	—	—	0000
		15:0	CHDPTR<15:0>																0000
31B0	DCH1CSIZ	31:16	—	—	—	—	—	—	—	—	—	—	—	—	—	—	—	—	0000
		15:0	CHCSIZ<15:0>																0000
31C0	DCH1CPTR	31:16	—	—	—	—	—	—	—	—	—	—	—	—	—	—	—	—	0000
		15:0	CHCPTR<15:0>																0000
31D0	DCH1DAT	31:16	—	—	—	—	—	—	—	—	—	—	—	—	—	—	—	—	0000
		15:0	—	—	—	—	—	—	—	—	CHPDAT<7:0>								0000
31E0	DCH2CON	31:16	—	—	—	—	—	—	—	—	—	—	—	—	—	—	—	—	0000
		15:0	CHBUSY	—	—	—	—	—	—	CHCHNS	CHEN	CHAED	CHCHN	CHAEN	—	CHEDET	CHPRI<1:0>		0000
31F0	DCH2ECON	31:16	—	—	—	—	—	—	—	—	CHAIRQ<7:0>								00FF
		15:0	CHSIRQ<7:0>								CFORCE	CABORT	PATEN	SIRQEN	AIRQEN	—	—	—	FF00
3200	DCH2INT	31:16	—	—	—	—	—	—	—	—	CHSDIE	CHSHIE	CHDDIE	CHDHIE	CHBCIE	CHCCIE	CHTAIE	CHERIE	0000
		15:0	—	—	—	—	—	—	—	—	CHSDIF	CHSHIF	CHDDIF	CHDHIF	CHBCIF	CHCCIF	CHTAIF	CHERIF	0000
3210	DCH2SSA	31:16	CHSSA<31:0>																0000
		15:0																	0000
3220	DCH2DSA	31:16	CHDSA<31:0>																0000
		15:0																	0000
3230	DCH2SSIZ	31:16	—	—	—	—	—	—	—	—	—	—	—	—	—	—	—	—	0000
		15:0	CHSSIZ<15:0>																0000
3240	DCH2DSIZ	31:16	—	—	—	—	—	—	—	—	—	—	—	—	—	—	—	—	0000
		15:0	CHDSIZ<15:0>																0000
3250	DCH2SPTR	31:16	—	—	—	—	—	—	—	—	—	—	—	—	—	—	—	—	0000
		15:0	CHSPTR<15:0>																0000
3260	DCH2DPTR	31:16	—	—	—	—	—	—	—	—	—	—	—	—	—	—	—	—	0000
		15:0	CHDPTR<15:0>																0000
3270	DCH2CSIZ	31:16	—	—	—	—	—	—	—	—	—	—	—	—	—	—	—	—	0000
		15:0	CHCSIZ<15:0>																0000

Legend: x = unknown value on Reset; — = unimplemented, read as '0'. Reset values are shown in hexadecimal.

Note 1: All registers in this table have corresponding CLR, SET and INV registers at their virtual addresses, plus offsets of 0x4, 0x8 and 0xC, respectively. See **Section 11.2 "CLR, SET and INV Registers"** for more information.

© 2011-2016 Microchip Technology Inc.

TABLE 9-3: DMA CHANNELS 0-3 REGISTER MAP (CONTINUED)

Virtual Address (BF88_#)	Register Name(1)	Bit Range	Bits 31/15	30/14	29/13	28/12	27/11	26/10	25/9	24/8	23/7	22/6	21/5	20/4	19/3	18/2	17/1	16/0	All Resets
3280	DCH2CPTR	31:16	—	—	—	—	—	—	—	—	—	—	—	—	—	—	—	—	0000
		15:0	CHCPTR<15:0>																0000
3290	DCH2DAT	31:16	—	—	—	—	—	—	—	—	—	—	—	—	—	—	—	—	0000
		15:0	—	—	—	—	—	—	—	—	CHPDAT<7:0>								0000
32A0	DCH3CON	31:16	—	—	—	—	—	—	—	—	—	—	—	—	—	—	—	—	0000
		15:0	CHBUSY	—	—	—	—	—	—	CHCHNS	CHEN	CHAED	CHCHN	CHAEN	—	CHEDET	CHPRI<1:0>		0000
32B0	DCH3ECON	31:16	—	—	—	—	—	—	—	—	CHAIRQ<7:0>								00FF
		15:0	CHSIRQ<7:0>								CFORCE	CABORT	PATEN	SIRQEN	AIRQEN	—	—	—	FF00
32C0	DCH3INT	31:16	—	—	—	—	—	—	—	—	CHSDIE	CHSHIE	CHDDIE	CHDHIE	CHBCIE	CHCCIE	CHTAIE	CHERIE	0000
		15:0	—	—	—	—	—	—	—	—	CHSDIF	CHSHIF	CHDDIF	CHDHIF	CHBCIF	CHCCIF	CHTAIF	CHERIF	0000
32D0	DCH3SSA	31:16	CHSSA<31:0>																0000
		15:0																	0000
32E0	DCH3DSA	31:16	CHDSA<31:0>																0000
		15:0																	0000
32F0	DCH3SSIZ	31:16	—	—	—	—	—	—	—	—	—	—	—	—	—	—	—	—	0000
		15:0	CHSSIZ<15:0>																0000
3300	DCH3DSIZ	31:16	—	—	—	—	—	—	—	—	—	—	—	—	—	—	—	—	0000
		15:0	CHDSIZ<15:0>																0000
3310	DCH3SPTR	31:16	—	—	—	—	—	—	—	—	—	—	—	—	—	—	—	—	0000
		15:0	CHSPTR<15:0>																0000
3320	DCH3DPTR	31:16	—	—	—	—	—	—	—	—	—	—	—	—	—	—	—	—	0000
		15:0	CHDPTR<15:0>																0000
3330	DCH3CSIZ	31:16	—	—	—	—	—	—	—	—	—	—	—	—	—	—	—	—	0000
		15:0	CHCSIZ<15:0>																0000
3340	DCH3CPTR	31:16	—	—	—	—	—	—	—	—	—	—	—	—	—	—	—	—	0000
		15:0	CHCPTR<15:0>																0000
3350	DCH3DAT	31:16	—	—	—	—	—	—	—	—	—	—	—	—	—	—	—	—	0000
		15:0	—	—	—	—	—	—	—	—	CHPDAT<7:0>								0000

Legend: x = unknown value on Reset; — = unimplemented, read as '0'. Reset values are shown in hexadecimal.

Note 1: All registers in this table have corresponding CLR, SET and INV registers at their virtual addresses, plus offsets of 0x4, 0x8 and 0xC, respectively. See **Section 11.2 "CLR, SET and INV Registers"** for more information.

© 2011-2016 Microchip Technology Inc.

REGISTER 9-1: DMACON: DMA CONTROLLER CONTROL REGISTER

Bit Range	Bit 31/23/15/7	Bit 30/22/14/6	Bit 29/21/13/5	Bit 28/20/12/4	Bit 27/19/11/3	Bit 26/18/10/2	Bit 25/17/9/1	Bit 24/16/8/0
31:24	U-0	U-0	U-0	U-0	U-0	U-0	U-0	U-0
	—	—	—	—	—	—	—	—
23:16	U-0	U-0	U-0	U-0	U-0	U-0	U-0	U-0
	—	—	—	—	—	—	—	—
15:8	R/W-0	U-0	U-0	R/W-0	R/W-0	U-0	U-0	U-0
	ON(1)	—	—	SUSPEND	DMABUSY	—	—	—
7:0	U-0	U-0	U-0	U-0	U-0	U-0	U-0	U-0
	—	—	—	—	—	—	—	—

Legend:			
R = Readable bit	W = Writable bit	U = Unimplemented bit, read as ‘0’	
-n = Value at POR	‘1’ = Bit is set	‘0’ = Bit is cleared	x = Bit is unknown

bit 31-16 **Unimplemented:** Read as ‘0’

bit 15 **ON:** DMA On bit(1)
- 1 = DMA module is enabled
- 0 = DMA module is disabled

bit 14-13 **Unimplemented:** Read as ‘0’

bit 12 **SUSPEND:** DMA Suspend bit
- 1 = DMA transfers are suspended to allow CPU uninterrupted access to data bus
- 0 = DMA operates normally

bit 11 **DMABUSY:** DMA Module Busy bit
- 1 = DMA module is active
- 0 = DMA module is disabled and not actively transferring data

bit 10-0 **Unimplemented:** Read as ‘0’

Note 1: When using 1:1 PBCLK divisor, the user’s software should not read/write the peripheral’s SFRs in the SYSCLK cycle immediately following the instruction that clears the module’s ON bit.

© 2011-2016 Microchip Technology Inc.

REGISTER 9-2: DMASTAT: DMA STATUS REGISTER

Bit Range	Bit 31/23/15/7	Bit 30/22/14/6	Bit 29/21/13/5	Bit 28/20/12/4	Bit 27/19/11/3	Bit 26/18/10/2	Bit 25/17/9/1	Bit 24/16/8/0
31:24	U-0	U-0	U-0	U-0	U-0	U-0	U-0	U-0
	—	—	—	—	—	—	—	—
23:16	U-0	U-0	U-0	U-0	U-0	U-0	U-0	U-0
	—	—	—	—	—	—	—	—
15:8	U-0	U-0	U-0	U-0	U-0	U-0	U-0	U-0
	—	—	—	—	—	—	—	—
7:0	U-0	U-0	U-0	U-0	R-0	R-0	R-0	R-0
	—	—	—	—	RDWR	DMACH<2:0>		

Legend:			
R = Readable bit	W = Writable bit	U = Unimplemented bit, read as ‘0’	
-n = Value at POR	‘1’ = Bit is set	‘0’ = Bit is cleared	x = Bit is unknown

bit 31-4 **Unimplemented:** Read as ‘0’

bit 3 **RDWR:** Read/Write Status bit

1 = Last DMA bus access was a read
0 = Last DMA bus access was a write

bit 2-0 **DMACH<2:0>:** DMA Channel bits

These bits contain the value of the most recent active DMA channel.

REGISTER 9-3: DMAADDR: DMA ADDRESS REGISTER

Bit Range	Bit 31/23/15/7	Bit 30/22/14/6	Bit 29/21/13/5	Bit 28/20/12/4	Bit 27/19/11/3	Bit 26/18/10/2	Bit 25/17/9/1	Bit 24/16/8/0
31:24	R-0	R-0	R-0	R-0	R-0	R-0	R-0	R-0
	DMAADDR<31:24>							
23:16	R-0	R-0	R-0	R-0	R-0	R-0	R-0	R-0
	DMAADDR<23:16>							
15:8	R-0	R-0	R-0	R-0	R-0	R-0	R-0	R-0
	DMAADDR<15:8>							
7:0	R-0	R-0	R-0	R-0	R-0	R-0	R-0	R-0
	DMAADDR<7:0>							

Legend:			
R = Readable bit	W = Writable bit	U = Unimplemented bit, read as ‘0’	
-n = Value at POR	‘1’ = Bit is set	‘0’ = Bit is cleared	x = Bit is unknown

bit 31-0 **DMAADDR<31:0>:** DMA Module Address bits

These bits contain the address of the most recent DMA access.

REGISTER 9-4: DCRCCON: DMA CRC CONTROL REGISTER

Bit Range	Bit 31/23/15/7	Bit 30/22/14/6	Bit 29/21/13/5	Bit 28/20/12/4	Bit 27/19/11/3	Bit 26/18/10/2	Bit 25/17/9/1	Bit 24/16/8/0
31:24	U-0	U-0	R/W-0	R/W-0	R/W-0	U-0	U-0	R/W-0
	—	—	BYTO<1:0>		WBO(1)	—	—	BITO
23:16	U-0	U-0	U-0	U-0	U-0	U-0	U-0	U-0
	—	—	—	—	—	—	—	—
15:8	U-0	U-0	U-0	R/W-0	R/W-0	R/W-0	R/W-0	R/W-0
	—	—	—	PLEN<4:0>				
7:0	R/W-0	R/W-0	R/W-0	U-0	U-0	R/W-0	R/W-0	R/W-0
	CRCEN	CRCAPP(1)	CRCTYP	—	—	CRCCH<2:0>		

Legend:			
R = Readable bit	W = Writable bit	U = Unimplemented bit, read as ‘0’	
-n = Value at POR	‘1’ = Bit is set	‘0’ = Bit is cleared	x = Bit is unknown

bit 31-30 **Unimplemented:** Read as ‘0’

bit 29-28 **BYTO<1:0>:** CRC Byte Order Selection bits
- 11 = Endian byte swap on half-word boundaries (i.e., source half-word order with reverse source byte order per half-word)
- 10 = Swap half-words on word boundaries (i.e., reverse source half-word order with source byte order per half-word)
- 01 = Endian byte swap on word boundaries (i.e., reverse source byte order)
- 00 = No swapping (i.e., source byte order)

bit 27 **WBO:** CRC Write Byte Order Selection bit(1)
- 1 = Source data is written to the destination re-ordered as defined by BYTO<1:0>
- 0 = Source data is written to the destination unaltered

bit 26-25 **Unimplemented:** Read as ‘0’

bit 24 **BITO:** CRC Bit Order Selection bit

When CRCTYP (DCRCCON<15>) = 1 (CRC module is in IP Header mode):
- 1 = The IP header checksum is calculated Least Significant bit (LSb) first (i.e., reflected)
- 0 = The IP header checksum is calculated Most Significant bit (MSb) first (i.e., not reflected)

When CRCTYP (DCRCCON<15>) = 0 (CRC module is in LFSR mode):
- 1 = The LFSR CRC is calculated Least Significant bit first (i.e., reflected)
- 0 = The LFSR CRC is calculated Most Significant bit first (i.e., not reflected)

bit 23-13 **Unimplemented:** Read as ‘0’

bit 12-8 **PLEN<4:0>:** Polynomial Length bits

When CRCTYP (DCRCCON<15>) = 1 (CRC module is in IP Header mode):

These bits are unused.

When CRCTYP (DCRCCON<15>) = 0 (CRC module is in LFSR mode):

Denotes the length of the polynomial – 1.

bit 7 **CRCEN:** CRC Enable bit
- 1 = CRC module is enabled and channel transfers are routed through the CRC module
- 0 = CRC module is disabled and channel transfers proceed normally

Note 1: When WBO = 1, unaligned transfers are not supported and the CRCAPP bit cannot be set.

© 2011-2016 Microchip Technology Inc.

REGISTER 9-4: DCRCCON: DMA CRC CONTROL REGISTER (CONTINUED)

bit 6 **CRCAPP:** CRC Append Mode bit(1)
- 1 = The DMA transfers data from the source into the CRC but NOT to the destination. When a block transfer completes the DMA writes the calculated CRC value to the location given by CHxDSA
- 0 = The DMA transfers data from the source through the CRC obeying WBO as it writes the data to the destination

bit 5 **CRCTYP:** CRC Type Selection bit
- 1 = The CRC module will calculate an IP header checksum
- 0 = The CRC module will calculate a LFSR CRC

bit 4-3 **Unimplemented:** Read as '0'

bit 2-0 **CRCCH<2:0>:** CRC Channel Select bits
- 111 = CRC is assigned to Channel 7
- 110 = CRC is assigned to Channel 6
- 101 = CRC is assigned to Channel 5
- 100 = CRC is assigned to Channel 4
- 011 = CRC is assigned to Channel 3
- 010 = CRC is assigned to Channel 2
- 001 = CRC is assigned to Channel 1
- 000 = CRC is assigned to Channel 0

Note 1: When WBO = 1, unaligned transfers are not supported and the CRCAPP bit cannot be set.

REGISTER 9-5: DCRCDATA: DMA CRC DATA REGISTER

Bit Range	Bit 31/23/15/7	Bit 30/22/14/6	Bit 29/21/13/5	Bit 28/20/12/4	Bit 27/19/11/3	Bit 26/18/10/2	Bit 25/17/9/1	Bit 24/16/8/0
31:24	R/W-0	R/W-0	R/W-0	R/W-0	R/W-0	R/W-0	R/W-0	R/W-0
	DCRCDATA<31:24>							
23:16	R/W-0	R/W-0	R/W-0	R/W-0	R/W-0	R/W-0	R/W-0	R/W-0
	DCRCDATA<23:16>							
15:8	R/W-0	R/W-0	R/W-0	R/W-0	R/W-0	R/W-0	R/W-0	R/W-0
	DCRCDATA<15:8>							
7:0	R/W-0	R/W-0	R/W-0	R/W-0	R/W-0	R/W-0	R/W-0	R/W-0
	DCRCDATA<7:0>							

Legend:			
R = Readable bit	W = Writable bit	U = Unimplemented bit, read as ‘0’	
-n = Value at POR	‘1’ = Bit is set	‘0’ = Bit is cleared	x = Bit is unknown

bit 31-0 **DCRCDATA<31:0>:** CRC Data Register bits

Writing to this register will seed the CRC generator. Reading from this register will return the current value of the CRC. Bits greater than PLEN will return ‘0’ on any read.

When CRCTYP (DCRCCON<15>) = 1 (CRC module is in IP Header mode):
Only the lower 16 bits contain IP header checksum information. The upper 16 bits are always ‘0’. Data written to this register is converted and read back in 1’s complement form (i.e., current IP header checksum value).

When CRCTYP (DCRCCON<15>) = 0 (CRC module is in LFSR mode):
Bits greater than PLEN will return ‘0’ on any read.

REGISTER 9-6: DCRCXOR: DMA CRCXOR ENABLE REGISTER

Bit Range	Bit 31/23/15/7	Bit 30/22/14/6	Bit 29/21/13/5	Bit 28/20/12/4	Bit 27/19/11/3	Bit 26/18/10/2	Bit 25/17/9/1	Bit 24/16/8/0
31:24	R/W-0	R/W-0	R/W-0	R/W-0	R/W-0	R/W-0	R/W-0	R/W-0
	DCRCXOR<31:24>							
23:16	R/W-0	R/W-0	R/W-0	R/W-0	R/W-0	R/W-0	R/W-0	R/W-0
	DCRCXOR<23:16>							
15:8	R/W-0	R/W-0	R/W-0	R/W-0	R/W-0	R/W-0	R/W-0	R/W-0
	DCRCXOR<15:8>							
7:0	R/W-0	R/W-0	R/W-0	R/W-0	R/W-0	R/W-0	R/W-0	R/W-0
	DCRCXOR<7:0>							

Legend:			
R = Readable bit	W = Writable bit	U = Unimplemented bit, read as ‘0’	
-n = Value at POR	‘1’ = Bit is set	‘0’ = Bit is cleared	x = Bit is unknown

bit 31-0 **DCRCXOR<31:0>:** CRC XOR Register bits

When CRCTYP (DCRCCON<15>) = 1 (CRC module is in IP Header mode):
This register is unused.

When CRCTYP (DCRCCON<15>) = 0 (CRC module is in LFSR mode):
1 = Enable the XOR input to the Shift register
0 = Disable the XOR input to the Shift register; data is shifted in directly from the previous stage in the register

© 2011-2016 Microchip Technology Inc.

REGISTER 9-7: DCHxCON: DMA CHANNEL 'x' CONTROL REGISTER

Bit Range	Bit 31/23/15/7	Bit 30/22/14/6	Bit 29/21/13/5	Bit 28/20/12/4	Bit 27/19/11/3	Bit 26/18/10/2	Bit 25/17/9/1	Bit 24/16/8/0
31:24	U-0	U-0	U-0	U-0	U-0	U-0	U-0	U-0
	—	—	—	—	—	—	—	—
23:16	U-0	U-0	U-0	U-0	U-0	U-0	U-0	U-0
	—	—	—	—	—	—	—	—
15:8	R/W-0	U-0	U-0	U-0	U-0	U-0	U-0	R/W-0
	CHBUSY	—	—	—	—	—	—	CHCHNS(1)
7:0	R/W-0	R/W-0	R/W-0	R/W-0	U-0	R-0	R/W-0	R/W-0
	CHEN(2)	CHAED	CHCHN	CHAEN	—	CHEDET	CHPRI<1:0>	

Legend:			
R = Readable bit	W = Writable bit	U = Unimplemented bit, read as '0'	
-n = Value at POR	'1' = Bit is set	'0' = Bit is cleared	x = Bit is unknown

bit 31-16 **Unimplemented:** Read as '0'

bit 15 **CHBUSY:** Channel Busy bit
1 = Channel is active or has been enabled
0 = Channel is inactive or has been disabled

bit 14-9 **Unimplemented:** Read as '0'

bit 8 **CHCHNS:** Chain Channel Selection bit(1)
1 = Chain to channel lower in natural priority (CH1 will be enabled by CH2 transfer complete)
0 = Chain to channel higher in natural priority (CH1 will be enabled by CH0 transfer complete)

bit 7 **CHEN:** Channel Enable bit(2)
1 = Channel is enabled
0 = Channel is disabled

bit 6 **CHAED:** Channel Allow Events If Disabled bit
1 = Channel start/abort events will be registered, even if the channel is disabled
0 = Channel start/abort events will be ignored if the channel is disabled

bit **CHCHN:** Channel Chain Enable bit
1 = Allow channel to be chained
0 = Do not allow channel to be chained

bit 4 **CHAEN:** Channel Automatic Enable bit
1 = Channel is continuously enabled, and not automatically disabled after a block transfer is complete
0 = Channel is disabled on block transfer complete

bit 3 **Unimplemented:** Read as '0'

bit 2 **CHEDET:** Channel Event Detected bit
1 = An event has been detected
0 = No events have been detected

bit 1-0 **CHPRI<1:0>:** Channel Priority bits
11 = Channel has priority 3 (highest)
10 = Channel has priority 2
01 = Channel has priority 1
00 = Channel has priority 0

Note 1: The chain selection bit takes effect when chaining is enabled (i.e., CHCHN = 1).

2: When the channel is suspended by clearing this bit, the user application should poll the CHBUSY bit (if available on the device variant) to see when the channel is suspended, as it may take some clock cycles to complete a current transaction before the channel is suspended.

REGISTER 9-8: DCHxECON: DMA CHANNEL 'x' EVENT CONTROL REGISTER

Bit Range	Bit 31/23/15/7	Bit 30/22/14/6	Bit 29/21/13/5	Bit 28/20/12/4	Bit 27/19/11/3	Bit 26/18/10/2	Bit 25/17/9/1	Bit 24/16/8/0
31:24	U-0	U-0	U-0	U-0	U-0	U-0	U-0	U-0
	—	—	—	—	—	—	—	—
23:16	R/W-1	R/W-1	R/W-1	R/W-1	R/W-1	R/W-1	R/W-1	R/W-1
	CHAIRQ<7:0>(1)							
15:8	R/W-1	R/W-1	R/W-1	R/W-1	R/W-1	R/W-1	R/W-1	R/W-1
	CHSIRQ<7:0>(1)							
7:0	S-0	S-0	R/W-0	R/W-0	R/W-0	U-0	U-0	U-0
	CFORCE	CABORT	PATEN	SIRQEN	AIRQEN	—	—	—

Legend:	S = Settable bit		
R = Readable bit	W = Writable bit	U = Unimplemented bit, read as '0'	
-n = Value at POR	'1' = Bit is set	'0' = Bit is cleared	x = Bit is unknown

bit 31-24 **Unimplemented:** Read as '0'

bit 23-16 **CHAIRQ<7:0>:** Channel Transfer Abort IRQ bits(1)

11111111 = Interrupt 255 will abort any transfers in progress and set CHAIF flag

•

•

•

00000001 = Interrupt 1 will abort any transfers in progress and set CHAIF flag

00000000 = Interrupt 0 will abort any transfers in progress and set CHAIF flag

bit 15-8 **CHSIRQ<7:0>:** Channel Transfer Start IRQ bits(1)

11111111 = Interrupt 255 will initiate a DMA transfer

•

•

•

00000001 = Interrupt 1 will initiate a DMA transfer

00000000 = Interrupt 0 will initiate a DMA transfer

bit 7 **CFORCE:** DMA Forced Transfer bit

1 = A DMA transfer is forced to begin when this bit is written to a '1'

0 = This bit always reads '0'

bit 6 **CABORT:** DMA Abort Transfer bit

1 = A DMA transfer is aborted when this bit is written to a '1'

0 = This bit always reads '0'

bit 5 **PATEN:** Channel Pattern Match Abort Enable bit

1 = Abort transfer and clear CHEN on pattern match

0 = Pattern match is disabled

bit 4 **SIRQEN:** Channel Start IRQ Enable bit

1 = Start channel cell transfer if an interrupt matching CHSIRQ occurs

0 = Interrupt number CHSIRQ is ignored and does not start a transfer

bit 3 **AIRQEN:** Channel Abort IRQ Enable bit

1 = Channel transfer is aborted if an interrupt matching CHAIRQ occurs

0 = Interrupt number CHAIRQ is ignored and does not terminate a transfer

bit 2-0 **Unimplemented:** Read as '0'

Note 1: See **Table 7-1: "Interrupt IRQ, Vector and Bit Location"** for the list of available interrupt IRQ sources.

© 2011-2016 Microchip Technology Inc.

REGISTER 9-9: DCHxINT: DMA CHANNEL 'x' INTERRUPT CONTROL REGISTER

Bit Range	Bit 31/23/15/7	Bit 30/22/14/6	Bit 29/21/13/5	Bit 28/20/12/4	Bit 27/19/11/3	Bit 26/18/10/2	Bit 25/17/9/1	Bit 24/16/8/0
31:24	U-0	U-0	U-0	U-0	U-0	U-0	U-0	U-0
	—	—	—	—	—	—	—	—
23:16	R/W-0	R/W-0	R/W-0	R/W-0	R/W-0	R/W-0	R/W-0	R/W-0
	CHSDIE	CHSHIE	CHDDIE	CHDHIE	CHBCIE	CHCCIE	CHTAIE	CHERIE
15:8	U-0	U-0	U-0	U-0	U-0	U-0	U-0	U-0
	—	—	—	—	—	—	—	—
7:0	R/W-0	R/W-0	R/W-0	R/W-0	R/W-0	R/W-0	R/W-0	R/W-0
	CHSDIF	CHSHIF	CHDDIF	CHDHIF	CHBCIF	CHCCIF	CHTAIF	CHERIF

Legend:			
R = Readable bit	W = Writable bit	U = Unimplemented bit, read as '0'	
-n = Value at POR	'1' = Bit is set	'0' = Bit is cleared	x = Bit is unknown

bit 31-24 **Unimplemented:** Read as '0'

bit 23 **CHSDIE:** Channel Source Done Interrupt Enable bit
1 = Interrupt is enabled
0 = Interrupt is disabled

bit 22 **CHSHIE:** Channel Source Half Empty Interrupt Enable bit
1 = Interrupt is enabled
0 = Interrupt is disabled

bit 21 **CHDDIE:** Channel Destination Done Interrupt Enable bit
1 = Interrupt is enabled
0 = Interrupt is disabled

bit 20 **CHDHIE:** Channel Destination Half Full Interrupt Enable bit
1 = Interrupt is enabled
0 = Interrupt is disabled

bit 19 **CHBCIE:** Channel Block Transfer Complete Interrupt Enable bit
1 = Interrupt is enabled
0 = Interrupt is disabled

bit 18 **CHCCIE:** Channel Cell Transfer Complete Interrupt Enable bit
1 = Interrupt is enabled
0 = Interrupt is disabled

bit 17 **CHTAIE:** Channel Transfer Abort Interrupt Enable bit
1 = Interrupt is enabled
0 = Interrupt is disabled

bit 16 **CHERIE:** Channel Address Error Interrupt Enable bit
1 = Interrupt is enabled
0 = Interrupt is disabled

bit 15-8 **Unimplemented:** Read as '0'

bit 7 **CHSDIF:** Channel Source Done Interrupt Flag bit
1 = Channel Source Pointer has reached end of source (CHSPTR = CHSSIZ)
0 = No interrupt is pending

bit 6 **CHSHIF:** Channel Source Half Empty Interrupt Flag bit
1 = Channel Source Pointer has reached midpoint of source (CHSPTR = CHSSIZ/2)
0 = No interrupt is pending

bit 5 **CHDDIF:** Channel Destination Done Interrupt Flag bit
1 = Channel Destination Pointer has reached end of destination (CHDPTR = CHDSIZ)
0 = No interrupt is pending

REGISTER 9-9: DCHxINT: DMA CHANNEL 'x' INTERRUPT CONTROL REGISTER (CONTINUED)

bit 4 **CHDHIF:** Channel Destination Half Full Interrupt Flag bit

1 = Channel Destination Pointer has reached midpoint of destination (CHDPTR = CHDSIZ/2)
0 = No interrupt is pending

bit 3 **CHBCIF:** Channel Block Transfer Complete Interrupt Flag bit

1 = A block transfer has been completed (the larger of CHSSIZ/CHDSIZ bytes has been transferred), or a pattern match event occurs
0 = No interrupt is pending

bit 2 **CHCCIF:** Channel Cell Transfer Complete Interrupt Flag bit

1 = A cell transfer has been completed (CHCSIZ bytes have been transferred)
0 = No interrupt is pending

bit 1 **CHTAIF:** Channel Transfer Abort Interrupt Flag bit

1 = An interrupt matching CHAIRQ has been detected and the DMA transfer has been aborted
0 = No interrupt is pending

bit 0 **CHERIF:** Channel Address Error Interrupt Flag bit

1 = A channel address error has been detected (either the source or the destination address is invalid)
0 = No interrupt is pending

© 2011-2016 Microchip Technology Inc.

REGISTER 9-10: DCHxSSA: DMA CHANNEL 'x' SOURCE START ADDRESS REGISTER

Bit Range	Bit 31/23/15/7	Bit 30/22/14/6	Bit 29/21/13/5	Bit 28/20/12/4	Bit 27/19/11/3	Bit 26/18/10/2	Bit 25/17/9/1	Bit 24/16/8/0
31:24	R/W-0	R/W-0	R/W-0	R/W-0	R/W-0	R/W-0	R/W-0	R/W-0
	CHSSA<31:24>							
23:16	R/W-0	R/W-0	R/W-0	R/W-0	R/W-0	R/W-0	R/W-0	R/W-0
	CHSSA<23:16>							
15:8	R/W-0	R/W-0	R/W-0	R/W-0	R/W-0	R/W-0	R/W-0	R/W-0
	CHSSA<15:8>							
7:0	R/W-0	R/W-0	R/W-0	R/W-0	R/W-0	R/W-0	R/W-0	R/W-0
	CHSSA<7:0>							

Legend:			
R = Readable bit	W = Writable bit	U = Unimplemented bit, read as '0'	
-n = Value at POR	'1' = Bit is set	'0' = Bit is cleared	x = Bit is unknown

bit 31-0 **CHSSA<31:0>** Channel Source Start Address bits
Channel source start address.
Note: This must be the physical address of the source.

REGISTER 9-11: DCHxDSA: DMA CHANNEL 'x' DESTINATION START ADDRESS REGISTER

Bit Range	Bit 31/23/15/7	Bit 30/22/14/6	Bit 29/21/13/5	Bit 28/20/12/4	Bit 27/19/11/3	Bit 26/18/10/2	Bit 25/17/9/1	Bit 24/16/8/0
31:24	R/W-0	R/W-0	R/W-0	R/W-0	R/W-0	R/W-0	R/W-0	R/W-0
	CHDSA<31:24>							
23:16	R/W-0	R/W-0	R/W-0	R/W-0	R/W-0	R/W-0	R/W-0	R/W-0
	CHDSA<23:16>							
15:8	R/W-0	R/W-0	R/W-0	R/W-0	R/W-0	R/W-0	R/W-0	R/W-0
	CHDSA<15:8>							
7:0	R/W-0	R/W-0	R/W-0	R/W-0	R/W-0	R/W-0	R/W-0	R/W-0
	CHDSA<7:0>							

Legend:			
R = Readable bit	W = Writable bit	U = Unimplemented bit, read as '0'	
-n = Value at POR	'1' = Bit is set	'0' = Bit is cleared	x = Bit is unknown

bit 31-0 **CHDSA<31:0>:** Channel Destination Start Address bits
Channel destination start address.
Note: This must be the physical address of the destination.

REGISTER 9-12: DCHxSSIZ: DMA CHANNEL 'x' SOURCE SIZE REGISTER

Bit Range	Bit 31/23/15/7	Bit 30/22/14/6	Bit 29/21/13/5	Bit 28/20/12/4	Bit 27/19/11/3	Bit 26/18/10/2	Bit 25/17/9/1	Bit 24/16/8/0
31:24	U-0	U-0	U-0	U-0	U-0	U-0	U-0	U-0
	—	—	—	—	—	—	—	—
23:16	U-0	U-0	U-0	U-0	U-0	U-0	U-0	U-0
	—	—	—	—	—	—	—	—
15:8	R/W-0	R/W-0	R/W-0	R/W-0	R/W-0	R/W-0	R/W-0	R/W-0
	CHSSIZ<15:8>							
7:0	R/W-0	R/W-0	R/W-0	R/W-0	R/W-0	R/W-0	R/W-0	R/W-0
	CHSSIZ<7:0>							

Legend:			
R = Readable bit	W = Writable bit	U = Unimplemented bit, read as '0'	
-n = Value at POR	'1' = Bit is set	'0' = Bit is cleared	x = Bit is unknown

bit 31-16 **Unimplemented:** Read as '0'

bit 15-0 **CHSSIZ<15:0>:** Channel Source Size bits

1111111111111111 = 65,535 byte source size

.

.

.

0000000000000010 = 2 byte source size

0000000000000001 = 1 byte source size

0000000000000000 = 65,536 byte source size

REGISTER 9-13: DCHxDSIZ: DMA CHANNEL 'x' DESTINATION SIZE REGISTER

Bit Range	Bit 31/23/15/7	Bit 30/22/14/6	Bit 29/21/13/5	Bit 28/20/12/4	Bit 27/19/11/3	Bit 26/18/10/2	Bit 25/17/9/1	Bit 24/16/8/0
31:24	U-0	U-0	U-0	U-0	U-0	U-0	U-0	U-0
	—	—	—	—	—	—	—	—
23:16	U-0	U-0	U-0	U-0	U-0	U-0	U-0	U-0
	—	—	—	—	—	—	—	—
15:8	R/W-0	R/W-0	R/W-0	R/W-0	R/W-0	R/W-0	R/W-0	R/W-0
	CHDSIZ<15:8>							
7:0	R/W-0	R/W-0	R/W-0	R/W-0	R/W-0	R/W-0	R/W-0	R/W-0
	CHDSIZ<7:0>							

Legend:			
R = Readable bit	W = Writable bit	U = Unimplemented bit, read as '0'	
-n = Value at POR	'1' = Bit is set	'0' = Bit is cleared	x = Bit is unknown

bit 31-16 **Unimplemented:** Read as '0'

bit 15-0 **CHDSIZ<15:0>:** Channel Destination Size bits

1111111111111111 = 65,535 byte destination size

.

.

.

0000000000000010 = 2 byte destination size

0000000000000001 = 1 byte destination size

0000000000000000 = 65,536 byte destination size

© 2011-2016 Microchip Technology Inc.

REGISTER 9-14: DCHxSPTR: DMA CHANNEL 'x' SOURCE POINTER REGISTER

Bit Range	Bit 31/23/15/7	Bit 30/22/14/6	Bit 29/21/13/5	Bit 28/20/12/4	Bit 27/19/11/3	Bit 26/18/10/2	Bit 25/17/9/1	Bit 24/16/8/0
31:24	U-0	U-0	U-0	U-0	U-0	U-0	U-0	U-0
	—	—	—	—	—	—	—	—
23:16	U-0	U-0	U-0	U-0	U-0	U-0	U-0	U-0
	—	—	—	—	—	—	—	—
15:8	R-0	R-0	R-0	R-0	R-0	R-0	R-0	R-0
	CHSPTR<15:8>							
7:0	R-0	R-0	R-0	R-0	R-0	R-0	R-0	R-0
	CHSPTR<7:0>							

Legend:			
R = Readable bit	W = Writable bit	U = Unimplemented bit, read as '0'	
-n = Value at POR	'1' = Bit is set	'0' = Bit is cleared	x = Bit is unknown

bit 31-16 **Unimplemented:** Read as '0'

bit 15-0 **CHSPTR<15:0>:** Channel Source Pointer bits

1111111111111111 = Points to byte 65,535 of the source
.
.
.
0000000000000001 = Points to byte 1 of the source
0000000000000000 = Points to byte 0 of the source

Note: When in Pattern Detect mode, this register is reset on a pattern detect.

REGISTER 9-15: DCHxDPTR: DMA CHANNEL 'x' DESTINATION POINTER REGISTER

Bit Range	Bit 31/23/15/7	Bit 30/22/14/6	Bit 29/21/13/5	Bit 28/20/12/4	Bit 27/19/11/3	Bit 26/18/10/2	Bit 25/17/9/1	Bit 24/16/8/0
31:24	U-0	U-0	U-0	U-0	U-0	U-0	U-0	U-0
	—	—	—	—	—	—	—	—
23:16	U-0	U-0	U-0	U-0	U-0	U-0	U-0	U-0
	—	—	—	—	—	—	—	—
15:8	R-0	R-0	R-0	R-0	R-0	R-0	R-0	R-0
	CHDPTR<15:8>							
7:0	R-0	R-0	R-0	R-0	R-0	R-0	R-0	R-0
	CHDPTR<7:0>							

Legend:			
R = Readable bit	W = Writable bit	U = Unimplemented bit, read as '0'	
-n = Value at POR	'1' = Bit is set	'0' = Bit is cleared	x = Bit is unknown

bit 31-16 **Unimplemented:** Read as '0'

bit 15-0 **CHDPTR<15:0>:** Channel Destination Pointer bits

1111111111111111 = Points to byte 65,535 of the destination
.
.
.
0000000000000001 = Points to byte 1 of the destination
0000000000000000 = Points to byte 0 of the destination

REGISTER 9-16: DCHxCSIZ: DMA CHANNEL 'x' CELL-SIZE REGISTER

Bit Range	Bit 31/23/15/7	Bit 30/22/14/6	Bit 29/21/13/5	Bit 28/20/12/4	Bit 27/19/11/3	Bit 26/18/10/2	Bit 25/17/9/1	Bit 24/16/8/0
31:24	U-0	U-0	U-0	U-0	U-0	U-0	U-0	U-0
	—	—	—	—	—	—	—	—
23:16	U-0	U-0	U-0	U-0	U-0	U-0	U-0	U-0
	—	—	—	—	—	—	—	—
15:8	R/W-0	R/W-0	R/W-0	R/W-0	R/W-0	R/W-0	R/W-0	R/W-0
	CHCSIZ<15:8>							
7:0	R/W-0	R/W-0	R/W-0	R/W-0	R/W-0	R/W-0	R/W-0	R/W-0
	CHCSIZ<7:0>							

Legend:			
R = Readable bit	W = Writable bit	U = Unimplemented bit, read as '0'	
-n = Value at POR	'1' = Bit is set	'0' = Bit is cleared	x = Bit is unknown

bit 31-16 **Unimplemented:** Read as '0'

bit 15-0 **CHCSIZ<15:0>:** Channel Cell Size bits

1111111111111111 = 65,535 bytes transferred on an event
.
.
.
0000000000000010 = 2 bytes transferred on an event
0000000000000001= 1 byte transferred on an event
0000000000000000 = 65,536 bytes transferred on an event

REGISTER 9-17: DCHxCPTR: DMA CHANNEL 'x' CELL POINTER REGISTER

Bit Range	Bit 31/23/15/7	Bit 30/22/14/6	Bit 29/21/13/5	Bit 28/20/12/4	Bit 27/19/11/3	Bit 26/18/10/2	Bit 25/17/9/1	Bit 24/16/8/0
31:24	U-0	U-0	U-0	U-0	U-0	U-0	U-0	U-0
	—	—	—	—	—	—	—	—
23:16	U-0	U-0	U-0	U-0	U-0	U-0	U-0	U-0
	—	—	—	—	—	—	—	—
15:8	R-0	R-0	R-0	R-0	R-0	R-0	R-0	R-0
	CHCPTR<15:8>							
7:0	R-0	R-0	R-0	R-0	R-0	R-0	R-0	R-0
	CHCPTR<7:0>							

Legend:			
R = Readable bit	W = Writable bit	U = Unimplemented bit, read as '0'	
-n = Value at POR	'1' = Bit is set	'0' = Bit is cleared	x = Bit is unknown

bit 31-16 **Unimplemented:** Read as '0'

bit 15-0 **CHCPTR<15:0>:** Channel Cell Progress Pointer bits

1111111111111111 = 65,535 bytes have been transferred since the last event
.
.
.
0000000000000001 = 1 byte has been transferred since the last event
0000000000000000 = 0 bytes have been transferred since the last event

Note: When in Pattern Detect mode, this register is reset on a pattern detect.

© 2011-2016 Microchip Technology Inc.

REGISTER 9-18: DCHxDAT: DMA CHANNEL 'x' PATTERN DATA REGISTER

Bit Range	Bit 31/23/15/7	Bit 30/22/14/6	Bit 29/21/13/5	Bit 28/20/12/4	Bit 27/19/11/3	Bit 26/18/10/2	Bit 25/17/9/1	Bit 24/16/8/0
31:24	U-0	U-0	U-0	U-0	U-0	U-0	U-0	U-0
	—	—	—	—	—	—	—	—
23:16	U-0	U-0	U-0	U-0	U-0	U-0	U-0	U-0
	—	—	—	—	—	—	—	—
15:8	U-0	U-0	U-0	U-0	U-0	U-0	U-0	U-0
	—	—	—	—	—	—	—	—
7:0	R/W-0	R/W-0	R/W-0	R/W-0	R/W-0	R/W-0	R/W-0	R/W-0
	CHPDAT<7:0>							

Legend:			
R = Readable bit	W = Writable bit	U = Unimplemented bit, read as '0'	
-n = Value at POR	'1' = Bit is set	'0' = Bit is cleared	x = Bit is unknown

bit 31-8 **Unimplemented:** Read as '0'

bit 7-0 **CHPDAT<7:0>:** Channel Data Register bits

Pattern Terminate mode:
Data to be matched must be stored in this register to allow a "terminate on match".

All other modes:
Unused.

NOTES:

© 2011-2016 Microchip Technology Inc.

10.0 USB ON-THE-GO (OTG)

Note: This data sheet summarizes the features of the PIC32MX1XX/2XX 28/36/44-pin Family of devices. It is not intended to be a comprehensive reference source. To complement the information in this data sheet, refer to **Section 27. "USB On-The-Go (OTG)"** (DS60001126), which is available from the *Documentation* > *Reference Manual* section of the Microchip PIC32 web site (www.microchip.com/pic32).

The Universal Serial Bus (USB) module contains analog and digital components to provide a USB 2.0 Full-Speed and Low-Speed embedded host, Full-Speed device or OTG implementation with a minimum of external components. This module in Host mode is intended for use as an embedded host and therefore does not implement a UHCI or OHCI controller.

The USB module consists of the clock generator, the USB voltage comparators, the transceiver, the Serial Interface Engine (SIE), a dedicated USB DMA controller, pull-up and pull-down resistors, and the register interface. A block diagram of the PIC32 USB OTG module is presented in Figure 10-1.

The clock generator provides the 48 MHz clock required for USB Full-Speed and Low-Speed communication. The voltage comparators monitor the voltage on the VBUS pin to determine the state of the bus. The transceiver provides the analog translation between the USB bus and the digital logic. The SIE is a state machine that transfers data to and from the endpoint buffers and generates the hardware protocol for data transfers. The USB DMA controller transfers data between the data buffers in RAM and the SIE. The integrated pull-up and pull-down resistors eliminate the need for external signaling components. The register interface allows the CPU to configure and communicate with the module.

The PIC32 USB module includes the following features:

- USB Full-Speed support for Host and Device
- Low-Speed Host support
- USB OTG support
- Integrated signaling resistors
- Integrated analog comparators for VBUS monitoring
- Integrated USB transceiver
- Transaction handshaking performed by hardware
- Endpoint buffering anywhere in system RAM
- Integrated DMA to access system RAM and Flash

Note: The implementation and use of the USB specifications, as well as other third party specifications or technologies, may require licensing; including, but not limited to, USB Implementers Forum, Inc., also referred to as USB-IF (www.usb.org). The user is fully responsible for investigating and satisfying any applicable licensing obligations.

FIGURE 10-1: PIC32MX1XX/2XX 28/36/44-PIN FAMILY FAMILY USB INTERFACE DIAGRAM

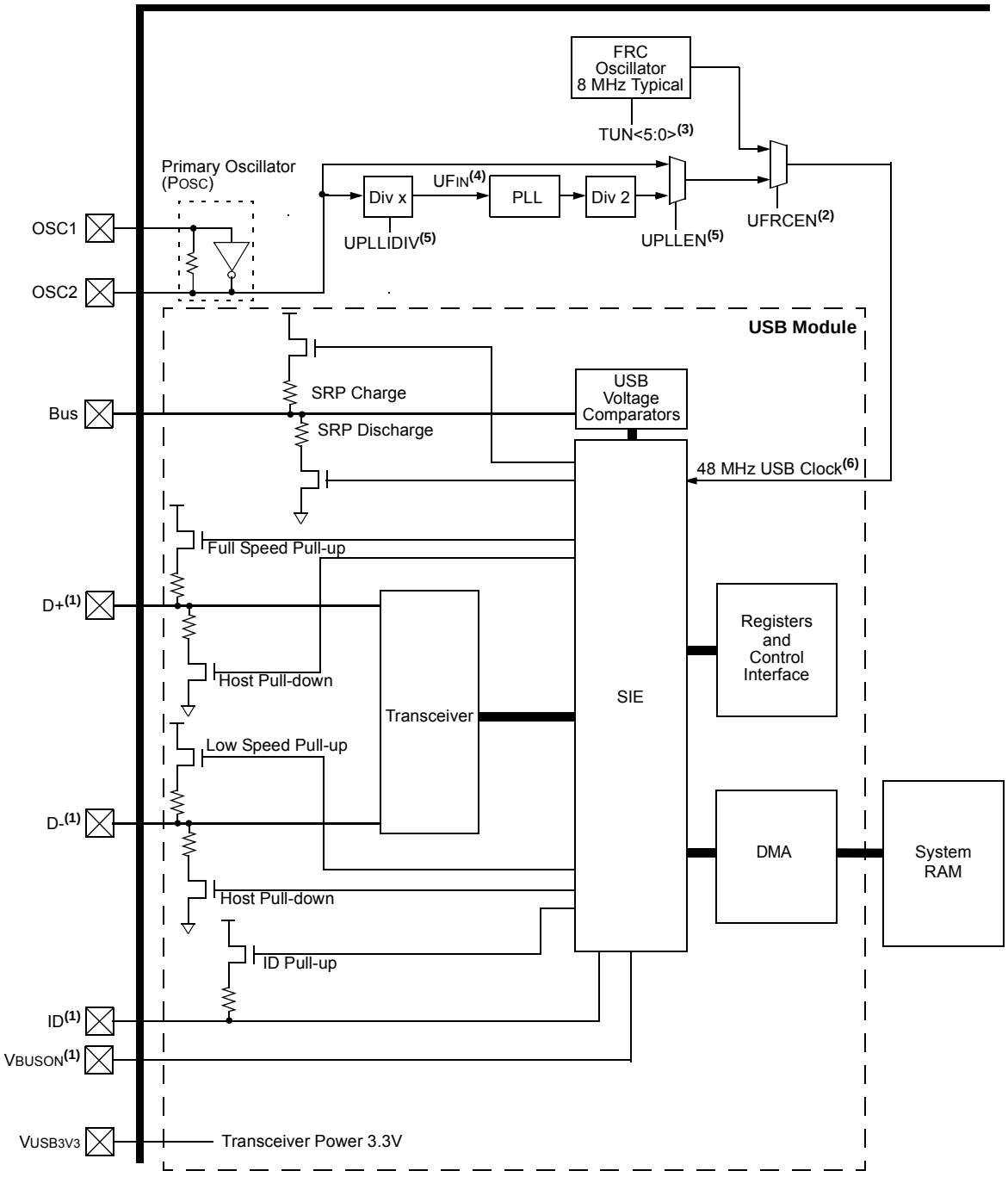

Note 1: Pins can be used as digital input/output when USB is not enabled.
2: This bit field is contained in the OSCCON register.
3: This bit field is contained in the OSCTRM register.
4: USB PLL UFIN requirements: 4 MHz.
5: This bit field is contained in the DEVCFG2 register.
6: A 48 MHz clock is required for proper USB operation.

© 2011-2016 Microchip Technology Inc.

10.1 USB Control Registers

TABLE 10-1: USB REGISTER MAP

Virtual Address (BF88_#)	Register Name(1)	Bit Range	Bits 31/15	30/14	29/13	28/12	27/11	26/10	25/9	24/8	23/7	22/6	21/5	20/4	19/3	18/2	17/1	16/0	All Resets
5040	U1OTGIR(2)	31:16	—	—	—	—	—	—	—	—	—	—	—	—	—	—	—	—	0000
		15:0	—	—	—	—	—	—	—	—	IDIF	T1MSECIF	LSTATEIF	ACTVIF	SESVDIF	SESENDIF	—	VBUSVDIF	0000
5050	U1OTGIE	31:16	—	—	—	—	—	—	—	—	—	—	—	—	—	—	—	—	0000
		15:0	—	—	—	—	—	—	—	—	IDIE	T1MSECIE	LSTATEIE	ACTVIE	SESVDIE	SESENDIE	—	VBUSVDIE	0000
5060	U1OTGSTAT(3)	31:16	—	—	—	—	—	—	—	—	—	—	—	—	—	—	—	—	0000
		15:0	—	—	—	—	—	—	—	—	ID	—	LSTATE	—	SESVD	SESEND	—	VBUSVD	0000
5070	U1OTGCON	31:16	—	—	—	—	—	—	—	—	—	—	—	—	—	—	—	—	0000
		15:0	—	—	—	—	—	—	—	—	DPPULUP	DMPULUP	DPPULDWN	DMPULDWN	VBUSON	OTGEN	VBUSCHG	VBUSDIS	0000
5080	U1PWRC	31:16	—	—	—	—	—	—	—	—	—	—	—	—	—	—	—	—	0000
		15:0	—	—	—	—	—	—	—	—	UACTPND(4)	—	—	USLPGRD	USBBUSY	—	USUSPEND	USBPWR	0000
5200	U1IR(2)	31:16	—	—	—	—	—	—	—	—	—	—	—	—	—	—	—	—	0000
		15:0	—	—	—	—	—	—	—	—	STALLIF	ATTACHIF	RESUMEIF	IDLEIF	TRNIF	SOFIF	UERRIF	URSTIF	0000
																		DETACHIF	0000
5210	U1IE	31:16	—	—	—	—	—	—	—	—	—	—	—	—	—	—	—	—	0000
		15:0	—	—	—	—	—	—	—	—	STALLIE	ATTACHIE	RESUMEIE	IDLEIE	TRNIE	SOFIE	UERRIE	URSTIE	0000
																		DETACHIE	0000
5220	U1EIR(2)	31:16	—	—	—	—	—	—	—	—	—	—	—	—	—	—	—	—	0000
		15:0	—	—	—	—	—	—	—	—	BTSEF	BMXEF	DMAEF	BTOEF	DFN8EF	CRC16EF	CRC5EF	PIDEF	0000
																	EOFEF		0000
5230	U1EIE	31:16	—	—	—	—	—	—	—	—	—	—	—	—	—	—	—	—	0000
		15:0	—	—	—	—	—	—	—	—	BTSEE	BMXEE	DMAEE	BTOEE	DFN8EE	CRC16EE	CRC5EE	PIDEE	0000
																	EOFEE		0000
5240	U1STAT(3)	31:16	—	—	—	—	—	—	—	—	—	—	—	—	—	—	—	—	0000
		15:0	—	—	—	—	—	—	—	—	ENDPT<3:0>				DIR	PPBI	—	—	0000
5250	U1CON	31:16	—	—	—	—	—	—	—	—	—	—	—	—	—	—	—	—	0000
		15:0	—	—	—	—	—	—	—	—	JSTATE	SE0	PKTDIS	USBRST	HOSTEN	RESUME	PPBRST	USBEN	0000
													TOKBUSY					SOFEN	0000
5260	U1ADDR	31:16	—	—	—	—	—	—	—	—	—	—	—	—	—	—	—	—	0000
		15:0	—	—	—	—	—	—	—	—	LSPDEN	DEVADDR<6:0>							0000
5270	U1BDTP1	31:16	—	—	—	—	—	—	—	—	—	—	—	—	—	—	—	—	0000
		15:0	—	—	—	—	—	—	—	—	BDTPTRL<15:9>							—	0000

Legend: x = unknown value on Reset; — = unimplemented, read as '0'. Reset values are shown in hexadecimal.

Note 1: With the exception of those noted, all registers in this table (except as noted) have corresponding CLR, SET and INV registers at their virtual address, plus an offset of 0x4, 0x8, and 0xC respectively. See **Section 11.2 "CLR, SET and INV Registers"** for more information.

2: This register does not have associated SET and INV registers.

3: This register does not have associated CLR, SET and INV registers.

4: Reset value for this bit is undefined.

© 2011-2016 Microchip Technology Inc.

TABLE 10-1: USB REGISTER MAP (CONTINUED)

Virtual Address (BF88_#)	Register Name(1)	Bit Range	Bits 31/15	30/14	29/13	28/12	27/11	26/10	25/9	24/8	23/7	22/6	21/5	20/4	19/3	18/2	17/1	16/0	All Resets
5280	U1FRML(3)	31:16	—	—	—	—	—	—	—	—	—	—	—	—	—	—	—	—	0000
		15:0	—	—	—	—	—	—	—	—	FRML<7:0>								0000
5290	U1FRMH(3)	31:16	—	—	—	—	—	—	—	—	—	—	—	—	—	—	—	—	0000
		15:0	—	—	—	—	—	—	—	—	—	—	—	—	—	FRMH<2:0>			0000
52A0	U1TOK	31:16	—	—	—	—	—	—	—	—	—	—	—	—	—	—	—	—	0000
		15:0	—	—	—	—	—	—	—	—	PID<3:0>				EP<3:0>				0000
52B0	U1SOF	31:16	—	—	—	—	—	—	—	—	—	—	—	—	—	—	—	—	0000
		15:0	—	—	—	—	—	—	—	—	CNT<7:0>								0000
52C0	U1BDTP2	31:16	—	—	—	—	—	—	—	—	—	—	—	—	—	—	—	—	0000
		15:0	—	—	—	—	—	—	—	—	BDTPTRH<7:0>								0000
52D0	U1BDTP3	31:16	—	—	—	—	—	—	—	—	—	—	—	—	—	—	—	—	0000
		15:0	—	—	—	—	—	—	—	—	BDTPTRU<7:0>								0000
52E0	U1CNFG1	31:16	—	—	—	—	—	—	—	—	—	—	—	—	—	—	—	—	0000
		15:0	—	—	—	—	—	—	—	—	UTEYE	UOEMON	—	USBSIDL	—	—	—	UASUSPND	0001
5300	U1EP0	31:16	—	—	—	—	—	—	—	—	—	—	—	—	—	—	—	—	0000
		15:0	—	—	—	—	—	—	—	—	LSPD	RETRYDIS	—	EPCONDIS	EPRXEN	EPTXEN	EPSTALL	EPHSHK	0000
5310	U1EP1	31:16	—	—	—	—	—	—	—	—	—	—	—	—	—	—	—	—	0000
		15:0	—	—	—	—	—	—	—	—	—	—	—	EPCONDIS	EPRXEN	EPTXEN	EPSTALL	EPHSHK	0000
5320	U1EP2	31:16	—	—	—	—	—	—	—	—	—	—	—	—	—	—	—	—	0000
		15:0	—	—	—	—	—	—	—	—	—	—	—	EPCONDIS	EPRXEN	EPTXEN	EPSTALL	EPHSHK	0000
5330	U1EP3	31:16	—	—	—	—	—	—	—	—	—	—	—	—	—	—	—	—	0000
		15:0	—	—	—	—	—	—	—	—	—	—	—	EPCONDIS	EPRXEN	EPTXEN	EPSTALL	EPHSHK	0000
5340	U1EP4	31:16	—	—	—	—	—	—	—	—	—	—	—	—	—	—	—	—	0000
		15:0	—	—	—	—	—	—	—	—	—	—	—	EPCONDIS	EPRXEN	EPTXEN	EPSTALL	EPHSHK	0000
5350	U1EP5	31:16	—	—	—	—	—	—	—	—	—	—	—	—	—	—	—	—	0000
		15:0	—	—	—	—	—	—	—	—	—	—	—	EPCONDIS	EPRXEN	EPTXEN	EPSTALL	EPHSHK	0000
5360	U1EP6	31:16	—	—	—	—	—	—	—	—	—	—	—	—	—	—	—	—	0000
		15:0	—	—	—	—	—	—	—	—	—	—	—	EPCONDIS	EPRXEN	EPTXEN	EPSTALL	EPHSHK	0000
5370	U1EP7	31:16	—	—	—	—	—	—	—	—	—	—	—	—	—	—	—	—	0000
		15:0	—	—	—	—	—	—	—	—	—	—	—	EPCONDIS	EPRXEN	EPTXEN	EPSTALL	EPHSHK	0000
5380	U1EP8	31:16	—	—	—	—	—	—	—	—	—	—	—	—	—	—	—	—	0000
		15:0	—	—	—	—	—	—	—	—	—	—	—	EPCONDIS	EPRXEN	EPTXEN	EPSTALL	EPHSHK	0000

Legend: x = unknown value on Reset; — = unimplemented, read as '0'. Reset values are shown in hexadecimal.

Note 1: With the exception of those noted, all registers in this table (except as noted) have corresponding CLR, SET and INV registers at their virtual address, plus an offset of 0x4, 0x8, and 0xC respectively. See **Section 11.2 "CLR, SET and INV Registers"** for more information.

2: This register does not have associated SET and INV registers.

3: This register does not have associated CLR, SET and INV registers.

4: Reset value for this bit is undefined.

© 2011-2016 Microchip Technology Inc.

TABLE 10-1: USB REGISTER MAP (CONTINUED)

Virtual Address (BF88_#)	Register Name(1)	Bit Range	Bits																All Resets
			31/15	30/14	29/13	28/12	27/11	26/10	25/9	24/8	23/7	22/6	21/5	20/4	19/3	18/2	17/1	16/0	
5390	U1EP9	31:16	—	—	—	—	—	—	—	—	—	—	—	—	—	—	—	—	0000
		15:0	—	—	—	—	—	—	—	—	—	—	—	EPCONDIS	EPRXEN	EPTXEN	EPSTALL	EPHSHK	0000
53A0	U1EP10	31:16	—	—	—	—	—	—	—	—	—	—	—	—	—	—	—	—	0000
		15:0	—	—	—	—	—	—	—	—	—	—	—	EPCONDIS	EPRXEN	EPTXEN	EPSTALL	EPHSHK	0000
53B0	U1EP11	31:16	—	—	—	—	—	—	—	—	—	—	—	—	—	—	—	—	0000
		15:0	—	—	—	—	—	—	—	—	—	—	—	EPCONDIS	EPRXEN	EPTXEN	EPSTALL	EPHSHK	0000
53C0	U1EP12	31:16	—	—	—	—	—	—	—	—	—	—	—	—	—	—	—	—	0000
		15:0	—	—	—	—	—	—	—	—	—	—	—	EPCONDIS	EPRXEN	EPTXEN	EPSTALL	EPHSHK	0000
53D0	U1EP13	31:16	—	—	—	—	—	—	—	—	—	—	—	—	—	—	—	—	0000
		15:0	—	—	—	—	—	—	—	—	—	—	—	EPCONDIS	EPRXEN	EPTXEN	EPSTALL	EPHSHK	0000
53E0	U1EP14	31:16	—	—	—	—	—	—	—	—	—	—	—	—	—	—	—	—	0000
		15:0	—	—	—	—	—	—	—	—	—	—	—	EPCONDIS	EPRXEN	EPTXEN	EPSTALL	EPHSHK	0000
53F0	U1EP15	31:16	—	—	—	—	—	—	—	—	—	—	—	—	—	—	—	—	0000
		15:0	—	—	—	—	—	—	—	—	—	—	—	EPCONDIS	EPRXEN	EPTXEN	EPSTALL	EPHSHK	0000

Legend: x = unknown value on Reset; — = unimplemented, read as '0'. Reset values are shown in hexadecimal.

Note 1: With the exception of those noted, all registers in this table (except as noted) have corresponding CLR, SET and INV registers at their virtual address, plus an offset of 0x4, 0x8, and 0xC respectively. See **Section 11.2 "CLR, SET and INV Registers"** for more information.

2: This register does not have associated SET and INV registers.

3: This register does not have associated CLR, SET and INV registers.

4: Reset value for this bit is undefined.

© 2011-2016 Microchip Technology Inc.

REGISTER 10-1: U1OTGIR: USB OTG INTERRUPT STATUS REGISTER

Bit Range	Bit 31/23/15/7	Bit 30/22/14/6	Bit 29/21/13/5	Bit 28/20/12/4	Bit 27/19/11/3	Bit 26/18/10/2	Bit 25/17/9/1	Bit 24/16/8/0
31:24	U-0	U-0	U-0	U-0	U-0	U-0	U-0	U-0
	—	—	—	—	—	—	—	—
23:16	U-0	U-0	U-0	U-0	U-0	U-0	U-0	U-0
	—	—	—	—	—	—	—	—
15:8	U-0	U-0	U-0	U-0	U-0	U-0	U-0	U-0
	—	—	—	—	—	—	—	—
7:0	R/WC-0, HS	R/WC-0, HS	R/WC-0, HS	R/WC-0, HS	R/WC-0, HS	R/WC-0, HS	U-0	R/WC-0, HS
	IDIF	T1MSECIF	LSTATEIF	ACTVIF	SESVDIF	SESENDIF	—	VBUSVDIF

Legend:	WC = Write ‘1’ to clear	HS = Hardware Settable bit	
R = Readable bit	W = Writable bit	U = Unimplemented bit, read as ‘0’	
-n = Value at POR	‘1’ = Bit is set	‘0’ = Bit is cleared	x = Bit is unknown

bit 31-8 **Unimplemented:** Read as ‘0’

bit 7 **IDIF:** ID State Change Indicator bit
1 = A change in the ID state was detected
0 = No change in the ID state was detected

bit 6 **T1MSECIF:** 1 Millisecond Timer bit
1 = 1 millisecond timer has expired
0 = 1 millisecond timer has not expired

bit 5 **LSTATEIF:** Line State Stable Indicator bit
1 = USB line state has been stable for 1 ms, but different from last time
0 = USB line state has not been stable for 1 ms

bit 4 **ACTVIF:** Bus Activity Indicator bit
1 = Activity on the D+, D-, ID or VBUS pins has caused the device to wake-up
0 = Activity has not been detected

bit 3 **SESVDIF:** Session Valid Change Indicator bit
1 = VBUS voltage has dropped below the session end level
0 = VBUS voltage has not dropped below the session end level

bit 2 **SESENDIF:** B-Device VBUS Change Indicator bit
1 = A change on the session end input was detected
0 = No change on the session end input was detected

bit 1 **Unimplemented:** Read as ‘0’

bit 0 **VBUSVDIF:** A-Device VBUS Change Indicator bit
1 = A change on the session valid input was detected
0 = No change on the session valid input was detected

© 2011-2016 Microchip Technology Inc.

REGISTER 10-2: U1OTGIE: USB OTG INTERRUPT ENABLE REGISTER

Bit Range	Bit 31/23/15/7	Bit 30/22/14/6	Bit 29/21/13/5	Bit 28/20/12/4	Bit 27/19/11/3	Bit 26/18/10/2	Bit 25/17/9/1	Bit 24/16/8/0
31:24	U-0	U-0	U-0	U-0	U-0	U-0	U-0	U-0
	—	—	—	—	—	—	—	—
23:16	U-0	U-0	U-0	U-0	U-0	U-0	U-0	U-0
	—	—	—	—	—	—	—	—
15:8	U-0	U-0	U-0	U-0	U-0	U-0	U-0	U-0
	—	—	—	—	—	—	—	—
7:0	R/W-0	R/W-0	R/W-0	R/W-0	R/W-0	R/W-0	U-0	R/W-0
	IDIE	T1MSECIE	LSTATEIE	ACTVIE	SESVDIE	SESENDIE	—	VBUSVDIE

Legend:			
R = Readable bit	W = Writable bit	U = Unimplemented bit, read as ‘0’	
-n = Value at POR	‘1’ = Bit is set	‘0’ = Bit is cleared	x = Bit is unknown

bit 31-8 **Unimplemented:** Read as ‘0’

bit 7 **IDIE:** ID Interrupt Enable bit
1 = ID interrupt is enabled
0 = ID interrupt is disabled

bit 6 **T1MSECIE:** 1 Millisecond Timer Interrupt Enable bit
1 = 1 millisecond timer interrupt is enabled
0 = 1 millisecond timer interrupt is disabled

bit 5 **LSTATEIE:** Line State Interrupt Enable bit
1 = Line state interrupt is enabled
0 = Line state interrupt is disabled

bit 4 **ACTVIE:** Bus Activity Interrupt Enable bit
1 = Activity interrupt is enabled
0 = Activity interrupt is disabled

bit 3 **SESVDIE:** Session Valid Interrupt Enable bit
1 = Session valid interrupt is enabled
0 = Session valid interrupt is disabled

bit 2 **SESENDIE:** B-Device Session End Interrupt Enable bit
1 = B-Device session end interrupt is enabled
0 = B-Device session end interrupt is disabled

bit 1 **Unimplemented:** Read as ‘0’

bit 0 **VBUSVDIE:** A-Device VBUS Valid Interrupt Enable bit
1 = A-Device VBUS valid interrupt is enabled
0 = A-Device VBUS valid interrupt is disabled

REGISTER 10-3: U1OTGSTAT: USB OTG STATUS REGISTER

Bit Range	Bit 31/23/15/7	Bit 30/22/14/6	Bit 29/21/13/5	Bit 28/20/12/4	Bit 27/19/11/3	Bit 26/18/10/2	Bit 25/17/9/1	Bit 24/16/8/0
31:24	U-0	U-0	U-0	U-0	U-0	U-0	U-0	U-0
	—	—	—	—	—	—	—	—
23:16	U-0	U-0	U-0	U-0	U-0	U-0	U-0	U-0
	—	—	—	—	—	—	—	—
15:8	U-0	U-0	U-0	U-0	U-0	U-0	U-0	U-0
	—	—	—	—	—	—	—	—
7:0	R-0	U-0	R-0	U-0	R-0	R-0	U-0	R-0
	ID	—	LSTATE	—	SESVD	SESEND	—	VBUSVD

Legend:			
R = Readable bit	W = Writable bit	U = Unimplemented bit, read as ‘0’	
-n = Value at POR	‘1’ = Bit is set	‘0’ = Bit is cleared	x = Bit is unknown

bit 31-8 **Unimplemented:** Read as ‘0’

bit 7 **ID:** ID Pin State Indicator bit
1 = No cable is attached or a “type B” cable has been inserted into the USB receptacle
0 = A “type A” OTG cable has been inserted into the USB receptacle

bit 6 **Unimplemented:** Read as ‘0’

bit 5 **LSTATE:** Line State Stable Indicator bit
1 = USB line state (SE0 (U1CON<6>) bit and JSTATE (U1CON<7>)) bit has been stable for previous 1 ms
0 = USB line state (SE0 and JSTATE) has not been stable for previous 1 ms

bit 4 **Unimplemented:** Read as ‘0’

bit 3 **SESVD:** Session Valid Indicator bit
1 = VBUS voltage is above Session Valid on the A or B device
0 = VBUS voltage is below Session Valid on the A or B device

bit 2 **SESEND:** B-Device Session End Indicator bit
1 = VBUS voltage is below Session Valid on the B device
0 = VBUS voltage is above Session Valid on the B device

bit 1 **Unimplemented:** Read as ‘0’

bit 0 **VBUSVD:** A-Device VBUS Valid Indicator bit
1 = VBUS voltage is above Session Valid on the A device
0 = VBUS voltage is below Session Valid on the A device

© 2011-2016 Microchip Technology Inc.

REGISTER 10-4: U1OTGCON: USB OTG CONTROL REGISTER

Bit Range	Bit 31/23/15/7	Bit 30/22/14/6	Bit 29/21/13/5	Bit 28/20/12/4	Bit 27/19/11/3	Bit 26/18/10/2	Bit 25/17/9/1	Bit 24/16/8/0
31:24	U-0	U-0	U-0	U-0	U-0	U-0	U-0	U-0
	—	—	—	—	—	—	—	—
23:16	U-0	U-0	U-0	U-0	U-0	U-0	U-0	U-0
	—	—	—	—	—	—	—	—
15:8	U-0	U-0	U-0	U-0	U-0	U-0	U-0	U-0
	—	—	—	—	—	—	—	—
7:0	R/W-0	R/W-0	R/W-0	R/W-0	R/W-0	R/W-0	R/W-0	R/W-0
	DPPULUP	DMPULUP	DPPULDWN	DMPULDWN	VBUSON	OTGEN	VBUSCHG	VBUSDIS

Legend:			
R = Readable bit	W = Writable bit	U = Unimplemented bit, read as ‘0’	
-n = Value at POR	‘1’ = Bit is set	‘0’ = Bit is cleared	x = Bit is unknown

bit 31-8 **Unimplemented:** Read as ‘0’

bit 7 **DPPULUP:** D+ Pull-Up Enable bit
1 = D+ data line pull-up resistor is enabled
0 = D+ data line pull-up resistor is disabled

bit 6 **DMPULUP:** D- Pull-Up Enable bit
1 = D- data line pull-up resistor is enabled
0 = D- data line pull-up resistor is disabled

bit 5 **DPPULDWN:** D+ Pull-Down Enable bit
1 = D+ data line pull-down resistor is enabled
0 = D+ data line pull-down resistor is disabled

bit 4 **DMPULDWN:** D- Pull-Down Enable bit
1 = D- data line pull-down resistor is enabled
0 = D- data line pull-down resistor is disabled

bit 3 **VBUSON:** VBUS Power-on bit
1 = VBUS line is powered
0 = VBUS line is not powered

bit 2 **OTGEN:** OTG Functionality Enable bit
1 = DPPULUP, DMPULUP, DPPULDWN and DMPULDWN bits are under software control
0 = DPPULUP, DMPULUP, DPPULDWN and DMPULDWN bits are under USB hardware control

bit 1 **VBUSCHG:** VBUS Charge Enable bit
1 = VBUS line is charged through a pull-up resistor
0 = VBUS line is not charged through a resistor

bit 0 **VBUSDIS:** VBUS Discharge Enable bit
1 = VBUS line is discharged through a pull-down resistor
0 = VBUS line is not discharged through a resistor

REGISTER 10-5: U1PWRC: USB POWER CONTROL REGISTER

Bit Range	Bit 31/23/15/7	Bit 30/22/14/6	Bit 29/21/13/5	Bit 28/20/12/4	Bit 27/19/11/3	Bit 26/18/10/2	Bit 25/17/9/1	Bit 24/16/8/0
31:24	U-0	U-0	U-0	U-0	U-0	U-0	U-0	U-0
	—	—	—	—	—	—	—	—
23:16	U-0	U-0	U-0	U-0	U-0	U-0	U-0	U-0
	—	—	—	—	—	—	—	—
15:8	U-0	U-0	U-0	U-0	U-0	U-0	U-0	U-0
	—	—	—	—	—	—	—	—
7:0	R-0	U-0	U-0	R/W-0	R/W-0	U-0	R/W-0	R/W-0
	UACTPND	—	—	USLPGRD	USBBUSY(1)	—	USUSPEND	USBPWR

Legend:			
R = Readable bit	W = Writable bit	U = Unimplemented bit, read as ‘0’	
-n = Value at POR	‘1’ = Bit is set	‘0’ = Bit is cleared	x = Bit is unknown

bit 31-8 **Unimplemented:** Read as ‘0’

bit 7 **UACTPND:** USB Activity Pending bit
- 1 = USB bus activity has been detected; however, an interrupt is pending, which has yet to be generated
- 0 = An interrupt is not pending

bit 6-5 **Unimplemented:** Read as ‘0’

bit 4 **USLPGRD:** USB Sleep Entry Guard bit
- 1 = Sleep entry is blocked if USB bus activity is detected or if a notification is pending
- 0 = USB module does not block Sleep entry

bit 3 **USBBUSY:** USB Module Busy bit(1)
- 1 = USB module is active or disabled, but not ready to be enabled
- 0 = USB module is not active and is ready to be enabled

bit 2 **Unimplemented:** Read as ‘0’

bit 1 **USUSPEND:** USB Suspend Mode bit
- 1 = USB module is placed in Suspend mode
  (The 48 MHz USB clock will be gated off. The transceiver is placed in a low-power state.)
- 0 = USB module operates normally

bit 0 **USBPWR:** USB Operation Enable bit
- 1 = USB module is turned on
- 0 = USB module is disabled
  (Outputs held inactive, device pins not used by USB, analog features are shut down to reduce power consumption.)

Note 1: When USBPWR = 0 and USBBUSY = 1, status from all other registers is invalid and writes to all USB module registers produce undefined results.

© 2011-2016 Microchip Technology Inc.

REGISTER 10-6: U1IR: USB INTERRUPT REGISTER

Bit Range	Bit 31/23/15/7	Bit 30/22/14/6	Bit 29/21/13/5	Bit 28/20/12/4	Bit 27/19/11/3	Bit 26/18/10/2	Bit 25/17/9/1	Bit 24/16/8/0
31:24	U-0	U-0	U-0	U-0	U-0	U-0	U-0	U-0
	—	—	—	—	—	—	—	—
23:16	U-0	U-0	U-0	U-0	U-0	U-0	U-0	U-0
	—	—	—	—	—	—	—	—
15:8	U-0	U-0	U-0	U-0	U-0	U-0	U-0	U-0
	—	—	—	—	—	—	—	—
7:0	R/WC-0, HS	R/WC-0, HS	R/WC-0, HS	R/WC-0, HS	R/WC-0, HS	R/WC-0, HS	R-0	R/WC-0, HS
	STALLIF	ATTACHIF(1)	RESUMEIF(2)	IDLEIF	TRNIF(3)	SOFIF	UERRIF(4)	URSTIF(5) DETACHIF(6)

Legend:	WC = Write ‘1’ to clear	HS = Hardware Settable bit	
R = Readable bit	W = Writable bit	U = Unimplemented bit, read as ‘0’	
-n = Value at POR	‘1’ = Bit is set	‘0’ = Bit is cleared	x = Bit is unknown

bit 31-8 **Unimplemented:** Read as ‘0’

bit 7 **STALLIF:** STALL Handshake Interrupt bit
1 = In Host mode a STALL handshake was received during the handshake phase of the transaction
In Device mode a STALL handshake was transmitted during the handshake phase of the transaction
0 = STALL handshake has not been sent

bit 6 **ATTACHIF:** Peripheral Attach Interrupt bit(1)
1 = Peripheral attachment was detected by the USB module
0 = Peripheral attachment was not detected

bit 5 **RESUMEIF:** Resume Interrupt bit(2)
1 = K-State is observed on the D+ or D- pin for 2.5 µs
0 = K-State is not observed

bit 4 **IDLEIF:** Idle Detect Interrupt bit
1 = Idle condition detected (constant Idle state of 3 ms or more)
0 = No Idle condition detected

bit 3 **TRNIF:** Token Processing Complete Interrupt bit(3)
1 = Processing of current token is complete; a read of the U1STAT register will provide endpoint information
0 = Processing of current token not complete

bit 2 **SOFIF:** SOF Token Interrupt bit
1 = SOF token received by the peripheral or the SOF threshold reached by the host
0 = SOF token was not received nor threshold reached

bit 1 **UERRIF**: USB Error Condition Interrupt bit(4)
1 = Unmasked error condition has occurred
0 = Unmasked error condition has not occurred

bit 0 **URSTIF:** USB Reset Interrupt bit (Device mode)(5)
1 = Valid USB Reset has occurred
0 = No USB Reset has occurred
DETACHIF: USB Detach Interrupt bit (Host mode)(6)
1 = Peripheral detachment was detected by the USB module
0 = Peripheral detachment was not detected

Note 1: This bit is valid only if the HOSTEN bit is set (see Register 10-11), there is no activity on the USB for 2.5 µs, and the current bus state is not SE0.
2: When not in Suspend mode, this interrupt should be disabled.
3: Clearing this bit will cause the STAT FIFO to advance.
4: Only error conditions enabled through the U1EIE register will set this bit.
5: Device mode.
6: Host mode.

REGISTER 10-7: U1IE: USB INTERRUPT ENABLE REGISTER

Bit Range	Bit 31/23/15/7	Bit 30/22/14/6	Bit 29/21/13/5	Bit 28/20/12/4	Bit 27/19/11/3	Bit 26/18/10/2	Bit 25/17/9/1	Bit 24/16/8/0
31:24	U-0	U-0	U-0	U-0	U-0	U-0	U-0	U-0
	—	—	—	—	—	—	—	—
23:16	U-0	U-0	U-0	U-0	U-0	U-0	U-0	U-0
	—	—	—	—	—	—	—	—
15:8	U-0	U-0	U-0	U-0	U-0	U-0	U-0	U-0
	—	—	—	—	—	—	—	—
7:0	R/W-0	R/W-0	R/W-0	R/W-0	R/W-0	R/W-0	R/W-0	R/W-0
	STALLIE	ATTACHIE	RESUMEIE	IDLEIE	TRNIE	SOFIE	UERRIE(1)	URSTIE(2) / DETACHIE(3)

Legend:			
R = Readable bit	W = Writable bit	U = Unimplemented bit, read as ‘0’	
-n = Value at POR	‘1’ = Bit is set	‘0’ = Bit is cleared	x = Bit is unknown

bit 31-8 **Unimplemented:** Read as ‘0’

bit 7 **STALLIE:** STALL Handshake Interrupt Enable bit
1 = STALL interrupt is enabled
0 = STALL interrupt is disabled

bit 6 **ATTACHIE:** ATTACH Interrupt Enable bit
1 = ATTACH interrupt is enabled
0 = ATTACH interrupt is disabled

bit 5 **RESUMEIE:** RESUME Interrupt Enable bit
1 = RESUME interrupt is enabled
0 = RESUME interrupt is disabled

bit 4 **IDLEIE:** Idle Detect Interrupt Enable bit
1 = Idle interrupt is enabled
0 = Idle interrupt is disabled

bit 3 **TRNIE:** Token Processing Complete Interrupt Enable bit
1 = TRNIF interrupt is enabled
0 = TRNIF interrupt is disabled

bit 2 **SOFIE:** SOF Token Interrupt Enable bit
1 = SOFIF interrupt is enabled
0 = SOFIF interrupt is disabled

bit 1 **UERRIE:** USB Error Interrupt Enable bit(1)
1 = USB Error interrupt is enabled
0 = USB Error interrupt is disabled

bit 0 **URSTIE:** USB Reset Interrupt Enable bit(2)
1 = URSTIF interrupt is enabled
0 = URSTIF interrupt is disabled

DETACHIE: USB Detach Interrupt Enable bit(3)
1 = DATTCHIF interrupt is enabled
0 = DATTCHIF interrupt is disabled

Note 1: For an interrupt to propagate USBIF, the UERRIE (U1IE<1>) bit must be set.
2: Device mode.
3: Host mode.

© 2011-2016 Microchip Technology Inc.

REGISTER 10-8: U1EIR: USB ERROR INTERRUPT STATUS REGISTER

Bit Range	Bit 31/23/15/7	Bit 30/22/14/6	Bit 29/21/13/5	Bit 28/20/12/4	Bit 27/19/11/3	Bit 26/18/10/2	Bit 25/17/9/1	Bit 24/16/8/0
31:24	U-0	U-0	U-0	U-0	U-0	U-0	U-0	U-0
	—	—	—	—	—	—	—	—
23:16	U-0	U-0	U-0	U-0	U-0	U-0	U-0	U-0
	—	—	—	—	—	—	—	—
15:8	U-0	U-0	U-0	U-0	U-0	U-0	U-0	U-0
	—	—	—	—	—	—	—	—
7:0	R/WC-0, HS	R/WC-0, HS	R/WC-0, HS	R/WC-0, HS	R/WC-0, HS	R/WC-0, HS	R/WC-0, HS	R/WC-0, HS
	BTSEF	BMXEF	DMAEF(1)	BTOEF(2)	DFN8EF	CRC16EF	CRC5EF(4) / EOFEF(3,5)	PIDEF

Legend:	WC = Write ‘1’ to clear	HS = Hardware Settable bit	
R = Readable bit	W = Writable bit	U = Unimplemented bit, read as ‘0’	
-n = Value at POR	‘1’ = Bit is set	‘0’ = Bit is cleared	x = Bit is unknown

bit 31-8 **Unimplemented:** Read as ‘0’

bit 7 **BTSEF:** Bit Stuff Error Flag bit
- 1 = Packet rejected due to bit stuff error
- 0 = Packet accepted

bit 6 **BMXEF:** Bus Matrix Error Flag bit
- 1 = The base address, of the Buffer Descriptor Table, or the address of an individual buffer pointed to by a Buffer Descriptor Table entry, is invalid.
- 0 = No address error

bit 5 **DMAEF:** DMA Error Flag bit(1)
- 1 = USB DMA error condition detected
- 0 = No DMA error

bit 4 **BTOEF:** Bus Turnaround Time-Out Error Flag bit(2)
- 1 = Bus turnaround time-out has occurred
- 0 = No bus turnaround time-out

bit 3 **DFN8EF:** Data Field Size Error Flag bit
- 1 = Data field received is not an integral number of bytes
- 0 = Data field received is an integral number of bytes

bit 2 **CRC16EF:** CRC16 Failure Flag bit
- 1 = Data packet rejected due to CRC16 error
- 0 = Data packet accepted

Note 1: This type of error occurs when the module’s request for the DMA bus is not granted in time to service the module’s demand for memory, resulting in an overflow or underflow condition, and/or the allocated buffer size is not sufficient to store the received data packet causing it to be truncated.

2: This type of error occurs when more than 16-bit-times of Idle from the previous End-of-Packet (EOP) has elapsed.

3: This type of error occurs when the module is transmitting or receiving data and the SOF counter has reached zero.

4: Device mode.

5: Host mode.

REGISTER 10-8: U1EIR: USB ERROR INTERRUPT STATUS REGISTER (CONTINUED)

bit 1 **CRC5EF:** CRC5 Host Error Flag bit[(4)]
`1` = Token packet rejected due to CRC5 error
`0` = Token packet accepted
EOFEF: EOF Error Flag bit[(3,5)]
`1` = An EOF error condition was detected
`0` = No EOF error condition was detected

bit 0 **PIDEF:** PID Check Failure Flag bit
`1` = PID check failed
`0` = PID check passed

Note 1: This type of error occurs when the module's request for the DMA bus is not granted in time to service the module's demand for memory, resulting in an overflow or underflow condition, and/or the allocated buffer size is not sufficient to store the received data packet causing it to be truncated.

2: This type of error occurs when more than 16-bit-times of Idle from the previous End-of-Packet (EOP) has elapsed.

3: This type of error occurs when the module is transmitting or receiving data and the SOF counter has reached zero.

4: Device mode.

5: Host mode.

© 2011-2016 Microchip Technology Inc.

REGISTER 10-9: U1EIE: USB ERROR INTERRUPT ENABLE REGISTER

Bit Range	Bit 31/23/15/7	Bit 30/22/14/6	Bit 29/21/13/5	Bit 28/20/12/4	Bit 27/19/11/3	Bit 26/18/10/2	Bit 25/17/9/1	Bit 24/16/8/0
31:24	U-0	U-0	U-0	U-0	U-0	U-0	U-0	U-0
	—	—	—	—	—	—	—	—
23:16	U-0	U-0	U-0	U-0	U-0	U-0	U-0	U-0
	—	—	—	—	—	—	—	—
15:8	U-0	U-0	U-0	U-0	U-0	U-0	U-0	U-0
	—	—	—	—	—	—	—	—
7:0	R/W-0	R/W-0	R/W-0	R/W-0	R/W-0	R/W-0	R/W-0	R/W-0
	BTSEE	BMXEE	DMAEE	BTOEE	DFN8EE	CRC16EE	CRC5EE(1) EOFEE(2)	PIDEE

Legend:			
R = Readable bit	W = Writable bit	U = Unimplemented bit, read as ‘0’	
-n = Value at POR	‘1’ = Bit is set	‘0’ = Bit is cleared	x = Bit is unknown

bit 31-8 **Unimplemented:** Read as ‘0’

bit 7 **BTSEE:** Bit Stuff Error Interrupt Enable bit
1 = BTSEF interrupt is enabled
0 = BTSEF interrupt is disabled

bit 6 **BMXEE:** Bus Matrix Error Interrupt Enable bit
1 = BMXEF interrupt is enabled
0 = BMXEF interrupt is disabled

bit 5 **DMAEE:** DMA Error Interrupt Enable bit
1 = DMAEF interrupt is enabled
0 = DMAEF interrupt is disabled

bit 4 **BTOEE:** Bus Turnaround Time-out Error Interrupt Enable bit
1 = BTOEF interrupt is enabled
0 = BTOEF interrupt is disabled

bit 3 **DFN8EE:** Data Field Size Error Interrupt Enable bit
1 = DFN8EF interrupt is enabled
0 = DFN8EF interrupt is disabled

bit 2 **CRC16EE:** CRC16 Failure Interrupt Enable bit
1 = CRC16EF interrupt is enabled
0 = CRC16EF interrupt is disabled

bit 1 **CRC5EE:** CRC5 Host Error Interrupt Enable bit(1)
1 = CRC5EF interrupt is enabled
0 = CRC5EF interrupt is disabled

EOFEE: EOF Error Interrupt Enable bit(2)
1 = EOF interrupt is enabled
0 = EOF interrupt is disabled

bit 0 **PIDEE:** PID Check Failure Interrupt Enable bit
1 = PIDEF interrupt is enabled
0 = PIDEF interrupt is disabled

Note 1: Device mode.
2: Host mode.

Note: For an interrupt to propagate the USBIF register, the UERRIE (U1IE<1>) bit must be set.

REGISTER 10-10: U1STAT: USB STATUS REGISTER

Bit Range	Bit 31/23/15/7	Bit 30/22/14/6	Bit 29/21/13/5	Bit 28/20/12/4	Bit 27/19/11/3	Bit 26/18/10/2	Bit 25/17/9/1	Bit 24/16/8/0
31:24	U-0	U-0	U-0	U-0	U-0	U-0	U-0	U-0
	—	—	—	—	—	—	—	—
23:16	U-0	U-0	U-0	U-0	U-0	U-0	U-0	U-0
	—	—	—	—	—	—	—	—
15:8	U-0	U-0	U-0	U-0	U-0	U-0	U-0	U-0
	—	—	—	—	—	—	—	—
7:0	R-x	R-x	R-x	R-x	R-x	R-x	U-0	U-0
	ENDPT<3:0>				DIR	PPBI	—	—

Legend:			
R = Readable bit	W = Writable bit	U = Unimplemented bit, read as ‘0’	
-n = Value at POR	‘1’ = Bit is set	‘0’ = Bit is cleared	x = Bit is unknown

bit 31-8 **Unimplemented:** Read as ‘0’

bit 7-4 **ENDPT<3:0>:** Encoded Number of Last Endpoint Activity bits
(Represents the number of the Buffer Descriptor Table, updated by the last USB transfer.)

1111 = Endpoint 15
1110 = Endpoint 14
.
.
.
0001 = Endpoint 1
0000 = Endpoint 0

bit 3 **DIR:** Last Buffer Descriptor Direction Indicator bit

1 = Last transaction was a transmit (TX) transfer
0 = Last transaction was a receive (RX) transfer

bit 2 **PPBI:** Ping-Pong Buffer Descriptor Pointer Indicator bit

1 = The last transaction was to the ODD Buffer Descriptor bank
0 = The last transaction was to the EVEN Buffer Descriptor bank

bit 1-0 **Unimplemented:** Read as ‘0’

Note: The U1STAT register is a window into a 4-byte FIFO maintained by the USB module. U1STAT value is only valid when the TRNIF (U1IR<3>) bit is active. Clearing the TRNIF bit advances the FIFO. Data in register is invalid when the TRNIF bit = 0.

© 2011-2016 Microchip Technology Inc.

REGISTER 10-11: U1CON: USB CONTROL REGISTER

Bit Range	Bit 31/23/15/7	Bit 30/22/14/6	Bit 29/21/13/5	Bit 28/20/12/4	Bit 27/19/11/3	Bit 26/18/10/2	Bit 25/17/9/1	Bit 24/16/8/0
31:24	U-0	U-0	U-0	U-0	U-0	U-0	U-0	U-0
	—	—	—	—	—	—	—	—
23:16	U-0	U-0	U-0	U-0	U-0	U-0	U-0	U-0
	—	—	—	—	—	—	—	—
15:8	U-0	U-0	U-0	U-0	U-0	U-0	U-0	U-0
	—	—	—	—	—	—	—	—
7:0	R-x	R-x	R/W-0	R/W-0	R/W-0	R/W-0	R/W-0	R/W-0
	JSTATE	SE0	PKTDIS(4) / TOKBUSY(1,5)	USBRST	HOSTEN(2)	RESUME(3)	PPBRST	USBEN(4) / SOFEN(5)

Legend:			
R = Readable bit	W = Writable bit	U = Unimplemented bit, read as ‘0’	
-n = Value at POR	‘1’ = Bit is set	‘0’ = Bit is cleared	x = Bit is unknown

bit 31-8 **Unimplemented:** Read as ‘0’

bit 7 **JSTATE:** Live Differential Receiver JSTATE flag bit
1 = JSTATE was detected on the USB
0 = No JSTATE was detected

bit 6 **SE0:** Live Single-Ended Zero flag bit
1 = Single-Ended Zero was detected on the USB
0 = No Single-Ended Zero was detected

bit 5 **PKTDIS:** Packet Transfer Disable bit(4)
1 = Token and packet processing is disabled (set upon SETUP token received)
0 = Token and packet processing is enabled

TOKBUSY: Token Busy Indicator bit(1,5)
1 = Token is being executed by the USB module
0 = No token is being executed

bit 4 **USBRST:** Module Reset bit(5)
1 = USB reset generated
0 = USB reset terminated

bit 3 **HOSTEN:** Host Mode Enable bit(2)
1 = USB host capability is enabled
0 = USB host capability is disabled

bit 2 **RESUME:** RESUME Signaling Enable bit(3)
1 = RESUME signaling is activated
0 = RESUME signaling is disabled

Note 1: Software is required to check this bit before issuing another token command to the U1TOK register (see Register 10-15).

2: All host control logic is reset any time that the value of this bit is toggled.

3: Software must set RESUME for 10 ms if the part is a function, or for 25 ms if the part is a host, and then clear it to enable remote wake-up. In Host mode, the USB module will append a Low-Speed EOP to the RESUME signaling when this bit is cleared.

4: Device mode.

5: Host mode.

REGISTER 10-11: U1CON: USB CONTROL REGISTER (CONTINUED)

bit 1 **PPBRST:** Ping-Pong Buffers Reset bit
1 = Reset all Even/Odd buffer pointers to the EVEN Buffer Descriptor banks
0 = Even/Odd buffer pointers are not Reset

bit 0 **USBEN:** USB Module Enable bit(4)
1 = USB module and supporting circuitry is enabled
0 = USB module and supporting circuitry is disabled

SOFEN: SOF Enable bit(5)
1 = SOF token is sent every 1 ms
0 = SOF token is disabled

Note 1: Software is required to check this bit before issuing another token command to the U1TOK register (see Register 10-15).

2: All host control logic is reset any time that the value of this bit is toggled.

3: Software must set RESUME for 10 ms if the part is a function, or for 25 ms if the part is a host, and then clear it to enable remote wake-up. In Host mode, the USB module will append a Low-Speed EOP to the RESUME signaling when this bit is cleared.

4: Device mode.

5: Host mode.

© 2011-2016 Microchip Technology Inc.

REGISTER 10-12: U1ADDR: USB ADDRESS REGISTER

Bit Range	Bit 31/23/15/7	Bit 30/22/14/6	Bit 29/21/13/5	Bit 28/20/12/4	Bit 27/19/11/3	Bit 26/18/10/2	Bit 25/17/9/1	Bit 24/16/8/0
31:24	U-0	U-0	U-0	U-0	U-0	U-0	U-0	U-0
	—	—	—	—	—	—	—	—
23:16	U-0	U-0	U-0	U-0	U-0	U-0	U-0	U-0
	—	—	—	—	—	—	—	—
15:8	U-0	U-0	U-0	U-0	U-0	U-0	U-0	U-0
	—	—	—	—	—	—	—	—
7:0	R/W-0	R/W-0	R/W-0	R/W-0	R/W-0	R/W-0	R/W-0	R/W-0
	LSPDEN	DEVADDR<6:0>						

Legend:			
R = Readable bit	W = Writable bit	U = Unimplemented bit, read as ‘0’	
-n = Value at POR	‘1’ = Bit is set	‘0’ = Bit is cleared	x = Bit is unknown

bit 31-8 **Unimplemented:** Read as ‘0’

bit 7 **LSPDEN:** Low-Speed Enable Indicator bit
1 = Next token command to be executed at Low-Speed
0 = Next token command to be executed at Full-Speed

bit 6-0 **DEVADDR<6:0>:** 7-bit USB Device Address bits

REGISTER 10-13: U1FRML: USB FRAME NUMBER LOW REGISTER

Bit Range	Bit 31/23/15/7	Bit 30/22/14/6	Bit 29/21/13/5	Bit 28/20/12/4	Bit 27/19/11/3	Bit 26/18/10/2	Bit 25/17/9/1	Bit 24/16/8/0
31:24	U-0	U-0	U-0	U-0	U-0	U-0	U-0	U-0
	—	—	—	—	—	—	—	—
23:16	U-0	U-0	U-0	U-0	U-0	U-0	U-0	U-0
	—	—	—	—	—	—	—	—
15:8	U-0	U-0	U-0	U-0	U-0	U-0	U-0	U-0
	—	—	—	—	—	—	—	—
7:0	R-0	R-0	R-0	R-0	R-0	R-0	R-0	R-0
	FRML<7:0>							

Legend:			
R = Readable bit	W = Writable bit	U = Unimplemented bit, read as ‘0’	
-n = Value at POR	‘1’ = Bit is set	‘0’ = Bit is cleared	x = Bit is unknown

bit 31-8 **Unimplemented:** Read as ‘0’

bit 7-0 **FRML<7:0>:** The 11-bit Frame Number Lower bits
The register bits are updated with the current frame number whenever a SOF TOKEN is received.

REGISTER 10-14: U1FRMH: USB FRAME NUMBER HIGH REGISTER

Bit Range	Bit 31/23/15/7	Bit 30/22/14/6	Bit 29/21/13/5	Bit 28/20/12/4	Bit 27/19/11/3	Bit 26/18/10/2	Bit 25/17/9/1	Bit 24/16/8/0
31:24	U-0	U-0	U-0	U-0	U-0	U-0	U-0	U-0
	—	—	—	—	—	—	—	—
23:16	U-0	U-0	U-0	U-0	U-0	U-0	U-0	U-0
	—	—	—	—	—	—	—	—
15:8	U-0	U-0	U-0	U-0	U-0	U-0	U-0	U-0
	—	—	—	—	—	—	—	—
7:0	U-0	U-0	U-0	U-0	U-0	R-0	R-0	R-0
	—	—	—	—	—	FRMH<2:0>		

Legend:			
R = Readable bit	W = Writable bit	U = Unimplemented bit, read as ‘0’	
-n = Value at POR	‘1’ = Bit is set	‘0’ = Bit is cleared	x = Bit is unknown

bit 31-3 **Unimplemented:** Read as ‘0’

bit 2-0 **FRMH<2:0>:** The Upper 3 bits of the Frame Numbers bits
The register bits are updated with the current frame number whenever a SOF TOKEN is received.

REGISTER 10-15: U1TOK: USB TOKEN REGISTER

Bit Range	Bit 31/23/15/7	Bit 30/22/14/6	Bit 29/21/13/5	Bit 28/20/12/4	Bit 27/19/11/3	Bit 26/18/10/2	Bit 25/17/9/1	Bit 24/16/8/0
31:24	U-0	U-0	U-0	U-0	U-0	U-0	U-0	U-0
	—	—	—	—	—	—	—	—
23:16	U-0	U-0	U-0	U-0	U-0	U-0	U-0	U-0
	—	—	—	—	—	—	—	—
15:8	U-0	U-0	U-0	U-0	U-0	U-0	U-0	U-0
	—	—	—	—	—	—	—	—
7:0	R/W-0	R/W-0	R/W-0	R/W-0	R/W-0	R/W-0	R/W-0	R/W-0
	PID<3:0>(1)				EP<3:0>			

Legend:			
R = Readable bit	W = Writable bit	U = Unimplemented bit, read as ‘0’	
-n = Value at POR	‘1’ = Bit is set	‘0’ = Bit is cleared	x = Bit is unknown

bit 31-8 **Unimplemented:** Read as ‘0’

bit 7-4 **PID<3:0>:** Token Type Indicator bits(1)
1101 = SETUP (TX) token type transaction
1001 = IN (RX) token type transaction
0001 = OUT (TX) token type transaction
Note: All other values are reserved and must not be used.

bit 3-0 **EP<3:0>:** Token Command Endpoint Address bits
The four bit value must specify a valid endpoint.

Note 1: All other values are reserved and must not be used.

© 2011-2016 Microchip Technology Inc.

REGISTER 10-16: U1SOF: USB SOF THRESHOLD REGISTER

Bit Range	Bit 31/23/15/7	Bit 30/22/14/6	Bit 29/21/13/5	Bit 28/20/12/4	Bit 27/19/11/3	Bit 26/18/10/2	Bit 25/17/9/1	Bit 24/16/8/0
31:24	U-0	U-0	U-0	U-0	U-0	U-0	U-0	U-0
	—	—	—	—	—	—	—	—
23:16	U-0	U-0	U-0	U-0	U-0	U-0	U-0	U-0
	—	—	—	—	—	—	—	—
15:8	U-0	U-0	U-0	U-0	U-0	U-0	U-0	U-0
	—	—	—	—	—	—	—	—
7:0	R/W-0	R/W-0	R/W-0	R/W-0	R/W-0	R/W-0	R/W-0	R/W-0
	CNT<7:0>							

Legend:			
R = Readable bit	W = Writable bit	U = Unimplemented bit, read as ‘0’	
-n = Value at POR	‘1’ = Bit is set	‘0’ = Bit is cleared	x = Bit is unknown

bit 31-8 **Unimplemented:** Read as ‘0’

bit 7-0 **CNT<7:0>:** SOF Threshold Value bits
Typical values of the threshold are:
01001010 = 64-byte packet
00101010 = 32-byte packet
00011010 = 16-byte packet
00010010 = 8-byte packet

REGISTER 10-17: U1BDTP1: USB BUFFER DESCRIPTOR TABLE PAGE 1 REGISTER

Bit Range	Bit 31/23/15/7	Bit 30/22/14/6	Bit 29/21/13/5	Bit 28/20/12/4	Bit 27/19/11/3	Bit 26/18/10/2	Bit 25/17/9/1	Bit 24/16/8/0
31:24	U-0	U-0	U-0	U-0	U-0	U-0	U-0	U-0
	—	—	—	—	—	—	—	—
23:16	U-0	U-0	U-0	U-0	U-0	U-0	U-0	U-0
	—	—	—	—	—	—	—	—
15:8	U-0	U-0	U-0	U-0	U-0	U-0	U-0	U-0
	—	—	—	—	—	—	—	—
7:0	R/W-0	R/W-0	R/W-0	R/W-0	R/W-0	R/W-0	R/W-0	U-0
	BDTPTRL<15:9>							—

Legend:			
R = Readable bit	W = Writable bit	U = Unimplemented bit, read as ‘0’	
-n = Value at POR	‘1’ = Bit is set	‘0’ = Bit is cleared	x = Bit is unknown

bit 31-8 **Unimplemented:** Read as ‘0’

bit 7-1 **BDTPTRL<15:9>:** Buffer Descriptor Table Base Address bits
This 7-bit value provides address bits 15 through 9 of the Buffer Descriptor Table base address, which defines the starting location of the Buffer Descriptor Table in system memory.
The 32-bit Buffer Descriptor Table base address is 512-byte aligned.

bit 0 **Unimplemented:** Read as ‘0’

REGISTER 10-18: U1BDTP2: USB BUFFER DESCRIPTOR TABLE PAGE 2 REGISTER

Bit Range	Bit 31/23/15/7	Bit 30/22/14/6	Bit 29/21/13/5	Bit 28/20/12/4	Bit 27/19/11/3	Bit 26/18/10/2	Bit 25/17/9/1	Bit 24/16/8/0
31:24	U-0	U-0	U-0	U-0	U-0	U-0	U-0	U-0
	—	—	—	—	—	—	—	—
23:16	U-0	U-0	U-0	U-0	U-0	U-0	U-0	U-0
	—	—	—	—	—	—	—	—
15:8	U-0	U-0	U-0	U-0	U-0	U-0	U-0	U-0
	—	—	—	—	—	—	—	—
7:0	R/W-0	R/W-0	R/W-0	R/W-0	R/W-0	R/W-0	R/W-0	R/W-0
	BDTPTRH<23:16>							

Legend:			
R = Readable bit	W = Writable bit	U = Unimplemented bit, read as ‘0’	
-n = Value at POR	‘1’ = Bit is set	‘0’ = Bit is cleared	x = Bit is unknown

bit 31-8 **Unimplemented:** Read as ‘0’

bit 7-0 **BDTPTRH<23:16>:** Buffer Descriptor Table Base Address bits

This 8-bit value provides address bits 23 through 16 of the Buffer Descriptor Table base address, which defines the starting location of the Buffer Descriptor Table in system memory.

The 32-bit Buffer Descriptor Table base address is 512-byte aligned.

REGISTER 10-19: U1BDTP3: USB BUFFER DESCRIPTOR TABLE PAGE 3 REGISTER

Bit Range	Bit 31/23/15/7	Bit 30/22/14/6	Bit 29/21/13/5	Bit 28/20/12/4	Bit 27/19/11/3	Bit 26/18/10/2	Bit 25/17/9/1	Bit 24/16/8/0
31:24	U-0	U-0	U-0	U-0	U-0	U-0	U-0	U-0
	—	—	—	—	—	—	—	—
23:16	U-0	U-0	U-0	U-0	U-0	U-0	U-0	U-0
	—	—	—	—	—	—	—	—
15:8	U-0	U-0	U-0	U-0	U-0	U-0	U-0	U-0
	—	—	—	—	—	—	—	—
7:0	R/W-0	R/W-0	R/W-0	R/W-0	R/W-0	R/W-0	R/W-0	R/W-0
	BDTPTRU<31:24>							

Legend:			
R = Readable bit	W = Writable bit	U = Unimplemented bit, read as ‘0’	
-n = Value at POR	‘1’ = Bit is set	‘0’ = Bit is cleared	x = Bit is unknown

bit 31-8 **Unimplemented:** Read as ‘0’

bit 7-0 **BDTPTRU<31:24>:** Buffer Descriptor Table Base Address bits

This 8-bit value provides address bits 31 through 24 of the Buffer Descriptor Table base address, defines the starting location of the Buffer Descriptor Table in system memory.

The 32-bit Buffer Descriptor Table base address is 512-byte aligned.

© 2011-2016 Microchip Technology Inc.

REGISTER 10-20: U1CNFG1: USB CONFIGURATION 1 REGISTER

Bit Range	Bit 31/23/15/7	Bit 30/22/14/6	Bit 29/21/13/5	Bit 28/20/12/4	Bit 27/19/11/3	Bit 26/18/10/2	Bit 25/17/9/1	Bit 24/16/8/0
31:24	U-0	U-0	U-0	U-0	U-0	U-0	U-0	U-0
	—	—	—	—	—	—	—	—
23:16	U-0	U-0	U-0	U-0	U-0	U-0	U-0	U-0
	—	—	—	—	—	—	—	—
15:8	U-0	U-0	U-0	U-0	U-0	U-0	U-0	U-0
	—	—	—	—	—	—	—	—
7:0	R/W-0	R/W-0	U-0	R/W-0	U-0	U-0	U-0	R/W-0
	UTEYE	UOEMON	—	USBSIDL	—	—	—	UASUSPND

Legend:			
R = Readable bit	W = Writable bit	U = Unimplemented bit, read as ‘0’	
-n = Value at POR	‘1’ = Bit is set	‘0’ = Bit is cleared	x = Bit is unknown

bit 31-8 **Unimplemented:** Read as ‘0’

bit 7 **UTEYE:** USB Eye-Pattern Test Enable bit
1 = Eye-Pattern Test is enabled
0 = Eye-Pattern Test is disabled

bit 6 **UOEMON:** USB $\overline{\text{OE}}$ Monitor Enable bit
1 = OE signal is active; it indicates intervals during which the D+/D- lines are driving
0 = OE signal is inactive

bit 5 **Unimplemented:** Read as ‘0’

bit 4 **USBSIDL:** Stop in Idle Mode bit
1 = Discontinue module operation when the device enters Idle mode
0 = Continue module operation when the device enters Idle mode

bit 3-1 **Unimplemented:** Read as ‘0’

bit 0 **UASUSPND:** Automatic Suspend Enable bit
1 = USB module automatically suspends upon entry to Sleep mode. See the USUSPEND bit (U1PWRC<1>) in Register 10-5.
0 = USB module does not automatically suspend upon entry to Sleep mode. Software must use the USUSPEND bit (U1PWRC<1>) to suspend the module, including the USB 48 MHz clock.

REGISTER 10-21: U1EP0-U1EP15: USB ENDPOINT CONTROL REGISTER

Bit Range	Bit 31/23/15/7	Bit 30/22/14/6	Bit 29/21/13/5	Bit 28/20/12/4	Bit 27/19/11/3	Bit 26/18/10/2	Bit 25/17/9/1	Bit 24/16/8/0
31:24	U-0	U-0	U-0	U-0	U-0	U-0	U-0	U-0
	—	—	—	—	—	—	—	—
23:16	U-0	U-0	U-0	U-0	U-0	U-0	U-0	U-0
	—	—	—	—	—	—	—	—
15:8	U-0	U-0	U-0	U-0	U-0	U-0	U-0	U-0
	—	—	—	—	—	—	—	—
7:0	R/W-0	R/W-0	U-0	R/W-0	R/W-0	R/W-0	R/W-0	R/W-0
	LSPD	RETRYDIS	—	EPCONDIS	EPRXEN	EPTXEN	EPSTALL	EPHSHK

Legend:			
R = Readable bit	W = Writable bit	U = Unimplemented bit, read as ‘0’	
-n = Value at POR	‘1’ = Bit is set	‘0’ = Bit is cleared	x = Bit is unknown

bit 31-8 **Unimplemented:** Read as ‘0’

bit 7 **LSPD:** Low-Speed Direct Connection Enable bit (Host mode and U1EP0 only)
1 = Direct connection to a Low-Speed device enabled
0 = Direct connection to a Low-Speed device disabled; hub required with PRE_PID

bit 6 **RETRYDIS:** Retry Disable bit (Host mode and U1EP0 only)
1 = Retry NAKed transactions disabled
0 = Retry NAKed transactions enabled; retry done in hardware

bit 5 **Unimplemented:** Read as ‘0’

bit 4 **EPCONDIS:** Bidirectional Endpoint Control bit
If EPTXEN = 1 and EPRXEN = 1:
1 = Disable Endpoint n from Control transfers; only TX and RX transfers allowed
0 = Enable Endpoint n for Control (SETUP) transfers; TX and RX transfers also allowed
Otherwise, this bit is ignored.

bit 3 **EPRXEN:** Endpoint Receive Enable bit
1 = Endpoint n receive is enabled
0 = Endpoint n receive is disabled

bit 2 **EPTXEN:** Endpoint Transmit Enable bit
1 = Endpoint n transmit is enabled
0 = Endpoint n transmit is disabled

bit 1 **EPSTALL:** Endpoint Stall Status bit
1 = Endpoint n was stalled
0 = Endpoint n was not stalled

bit 0 **EPHSHK:** Endpoint Handshake Enable bit
1 = Endpoint Handshake is enabled
0 = Endpoint Handshake is disabled (typically used for isochronous endpoints)

© 2011-2016 Microchip Technology Inc.

11.0 I/O PORTS

Note: This data sheet summarizes the features of the PIC32MX1XX/2XX 28/36/44-pin Family of devices. It is not intended to be a comprehensive reference source. To complement the information in this data sheet, refer to **Section 12. "I/O Ports"** (DS60001120), which is available from the *Documentation > Reference Manual* section of the Microchip PIC32 web site (www.microchip.com/pic32).

General purpose I/O pins are the simplest of peripherals. They allow the PIC® MCU to monitor and control other devices. To add flexibility and functionality, some pins are multiplexed with alternate functions.

These functions depend on which peripheral features are on the device. In general, when a peripheral is functioning, that pin may not be used as a general purpose I/O pin.

Key features of this module include:

- Individual output pin open-drain enable/disable
- Individual input pin weak pull-up and pull-down
- Monitor selective inputs and generate interrupt when change in pin state is detected
- Operation during Sleep and Idle modes
- Fast bit manipulation using CLR, SET, and INV registers

Figure 11-1 illustrates a block diagram of a typical multiplexed I/O port.

FIGURE 11-1: BLOCK DIAGRAM OF A TYPICAL MULTIPLEXED PORT STRUCTURE

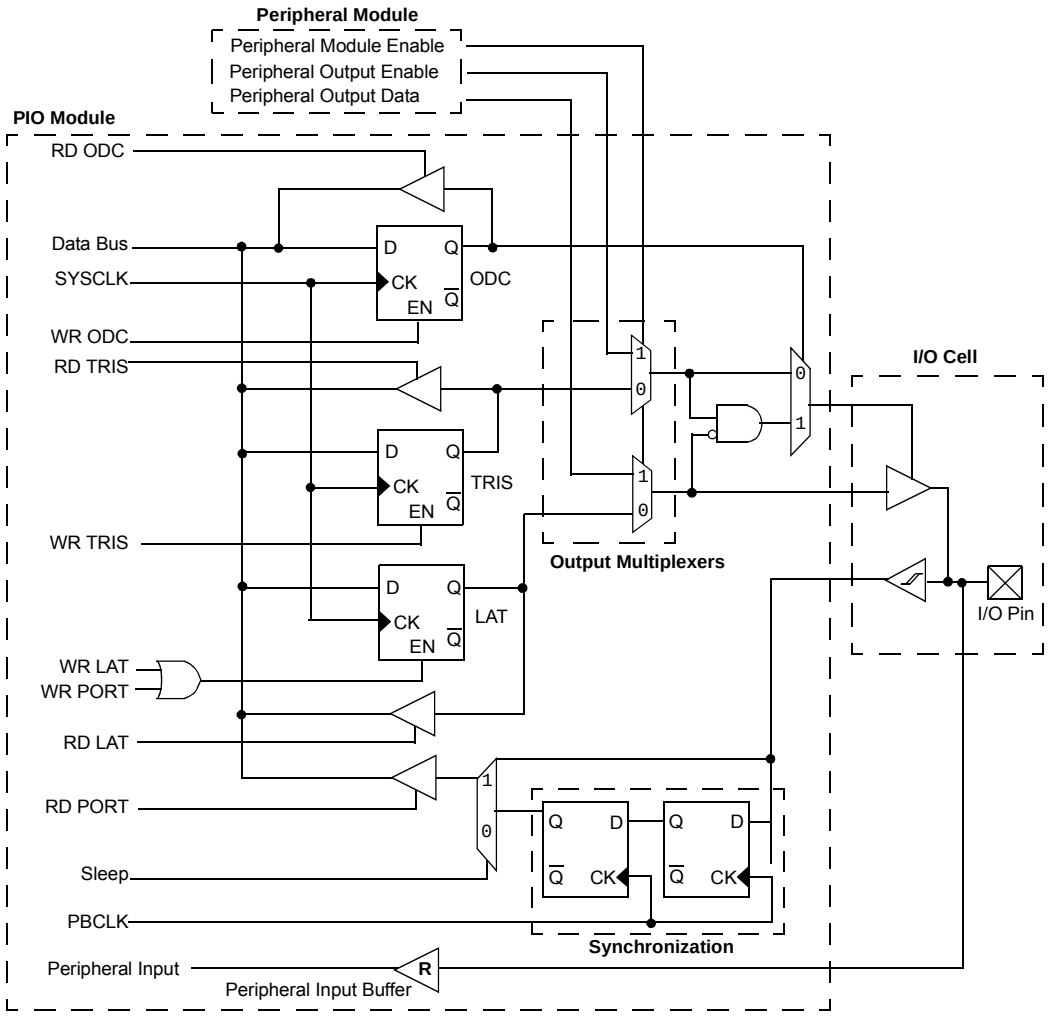

Legend: R = Peripheral input buffer types may vary. Refer to Table 1-1 for peripheral details.

Note: This block diagram is a general representation of a shared port/peripheral structure and is only provided for illustration purposes. The actual structure for any specific port/peripheral combination may be different than it is shown here.

11.1 Parallel I/O (PIO) Ports

All port pins have 10 registers directly associated with their operation as digital I/O. The data direction register (TRISx) determines whether the pin is an input or an output. If the data direction bit is a '1', then the pin is an input. All port pins are defined as inputs after a Reset. Reads from the latch (LATx) read the latch. Writes to the latch write the latch. Reads from the port (PORTx) read the port pins, while writes to the port pins write the latch.

11.1.1 OPEN-DRAIN CONFIGURATION

In addition to the PORTx, LATx, and TRISx registers for data control, some port pins can also be individually configured for either digital or open-drain output. This is controlled by the Open-Drain Control register, ODCx, associated with each port. Setting any of the bits configures the corresponding pin to act as an open-drain output.

The open-drain feature allows the generation of outputs higher than VDD (e.g., 5V) on any desired 5V-tolerant pins by using external pull-up resistors. The maximum open-drain voltage allowed is the same as the maximum VIH specification.

See the **"Pin Diagrams"** section for the available pins and their functionality.

11.1.2 CONFIGURING ANALOG AND DIGITAL PORT PINS

The ANSELx register controls the operation of the analog port pins. The port pins that are to function as analog inputs must have their corresponding ANSEL and TRIS bits set. In order to use port pins for I/O functionality with digital modules, such as Timers, UARTs, etc., the corresponding ANSELx bit must be cleared.

The ANSELx register has a default value of 0xFFFF; therefore, all pins that share analog functions are analog (not digital) by default.

If the TRIS bit is cleared (output) while the ANSELx bit is set, the digital output level (VOH or VOL) is converted by an analog peripheral, such as the ADC module or Comparator module.

When the PORT register is read, all pins configured as analog input channels are read as cleared (a low level).

Pins configured as digital inputs do not convert an analog input. Analog levels on any pin defined as a digital input (including the ANx pins) can cause the input buffer to consume current that exceeds the device specifications.

11.1.3 I/O PORT WRITE/READ TIMING

One instruction cycle is required between a port direction change or port write operation and a read operation of the same port. Typically this instruction would be a NOP.

11.1.4 INPUT CHANGE NOTIFICATION

The input change notification function of the I/O ports allows the PIC32MX1XX/2XX 28/36/44-pin Family devices to generate interrupt requests to the processor in response to a change-of-state on selected input pins. This feature can detect input change-of-states even in Sleep mode, when the clocks are disabled. Every I/O port pin can be selected (enabled) for generating an interrupt request on a change-of-state.

Five control registers are associated with the CN functionality of each I/O port. The CNENx registers contain the CN interrupt enable control bits for each of the input pins. Setting any of these bits enables a CN interrupt for the corresponding pins.

The CNSTATx register indicates whether a change occurred on the corresponding pin since the last read of the PORTx bit.

Each I/O pin also has a weak pull-up and a weak pull-down connected to it. The pull-ups act as a current source or sink source connected to the pin, and eliminate the need for external resistors when push-button or keypad devices are connected. The pull-ups and pull-downs are enabled separately using the CNPUx and the CNPDx registers, which contain the control bits for each of the pins. Setting any of the control bits enables the weak pull-ups and/or pull-downs for the corresponding pins.

Note:	Pull-ups and pull-downs on change notification pins should always be disabled when the port pin is configured as a digital output.

An additional control register (CNCONx) is shown in Register 11-3.

11.2 CLR, SET and INV Registers

Every I/O module register has a corresponding CLR (clear), SET (set) and INV (invert) register designed to provide fast atomic bit manipulations. As the name of the register implies, a value written to a SET, CLR or INV register effectively performs the implied operation, but only on the corresponding base register and only bits specified as '1' are modified. Bits specified as '0' are not modified.

Reading SET, CLR and INV registers returns undefined values. To see the affects of a write operation to a SET, CLR, or INV register, the base register must be read.

© 2011-2016 Microchip Technology Inc.

11.3 Peripheral Pin Select

A major challenge in general purpose devices is providing the largest possible set of peripheral features while minimizing the conflict of features on I/O pins. The challenge is even greater on low pin-count devices. In an application where more than one peripheral needs to be assigned to a single pin, inconvenient workarounds in application code or a complete redesign may be the only option.

The Peripheral Pin Select (PPS) configuration provides an alternative to these choices by enabling peripheral set selection and their placement on a wide range of I/O pins. By increasing the pinout options available on a particular device, users can better tailor the device to their entire application, rather than trimming the application to fit the device.

The PPS configuration feature operates over a fixed subset of digital I/O pins. Users may independently map the input and/or output of most digital peripherals to these I/O pins. PPS is performed in software and generally does not require the device to be reprogrammed. Hardware safeguards are included that prevent accidental or spurious changes to the peripheral mapping once it has been established.

11.3.1 AVAILABLE PINS

The number of available pins is dependent on the particular device and its pin count. Pins that support the PPS feature include the designation “RPn” in their full pin designation, where “RP” designates a remappable peripheral and “n” is the remappable port number.

11.3.2 AVAILABLE PERIPHERALS

The peripherals managed by the PPS are all digital-only peripherals. These include general serial communications (UART and SPI), general purpose timer clock inputs, timer-related peripherals (input capture and output compare) and interrupt-on-change inputs.

In comparison, some digital-only peripheral modules are never included in the PPS feature. This is because the peripheral’s function requires special I/O circuitry on a specific port and cannot be easily connected to multiple pins. These modules include I^2C among others. A similar requirement excludes all modules with analog inputs, such as the Analog-to-Digital Converter (ADC).

A key difference between remappable and non-remappable peripherals is that remappable peripherals are not associated with a default I/O pin. The peripheral must always be assigned to a specific I/O pin before it can be used. In contrast, non-remappable peripherals are always available on a default pin, assuming that the peripheral is active and not conflicting with another peripheral.

When a remappable peripheral is active on a given I/O pin, it takes priority over all other digital I/O and digital communication peripherals associated with the pin. Priority is given regardless of the type of peripheral that is mapped. Remappable peripherals never take priority over any analog functions associated with the pin.

11.3.3 CONTROLLING PERIPHERAL PIN SELECT

PPS features are controlled through two sets of SFRs: one to map peripheral inputs, and one to map outputs. Because they are separately controlled, a particular peripheral’s input and output (if the peripheral has both) can be placed on any selectable function pin without constraint.

The association of a peripheral to a peripheral-selectable pin is handled in two different ways, depending on whether an input or output is being mapped.

11.3.4 INPUT MAPPING

The inputs of the PPS options are mapped on the basis of the peripheral. That is, a control register associated with a peripheral dictates the pin it will be mapped to. The [*pin name*]R registers, where [*pin name*] refers to the peripheral pins listed in Table 11-1, are used to configure peripheral input mapping (see Register 11-1). Each register contains sets of 4 bit fields. Programming these bit fields with an appropriate value maps the RPn pin with the corresponding value to that peripheral. For any given device, the valid range of values for any bit field is shown in Table 11-1.

For example, Figure 11-2 illustrates the remappable pin selection for the U1RX input.

FIGURE 11-2: REMAPPABLE INPUT EXAMPLE FOR U1RX

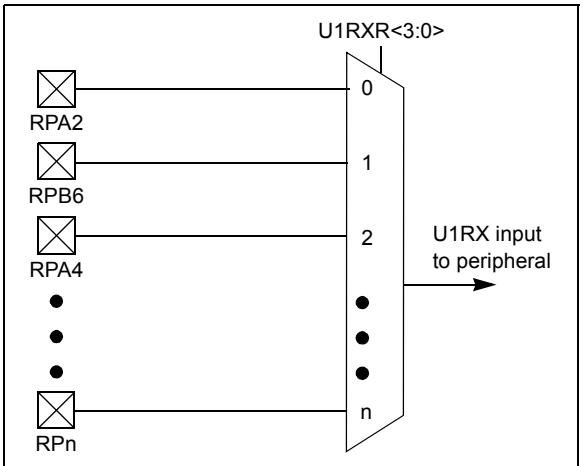

Note: For input only, PPS functionality does not have priority over TRISx settings. Therefore, when configuring RPn pin for input, the corresponding bit in the TRISx register must also be configured for input (set to ‘1’).

TABLE 11-1: INPUT PIN SELECTION

Peripheral Pin	[*pin name*]R SFR	[*pin name*]R bits	[*pin name*]R Value to RPn Pin Selection
INT4	INT4R	INT4R<3:0>	0000 = RPA0 0001 = RPB3 0010 = RPB4 0011 = RPB15 0100 = RPB7 0101 = RPC7(2) 0110 = RPC0(1) 0111 = RPC5(2) 1000 = Reserved • • • 1111 = Reserved
T2CK	T2CKR	T2CKR<3:0>	
IC4	IC4R	IC4R<3:0>	
$\overline{SS1}$	SS1R	SS1R<3:0>	
REFCLKI	REFCLKIR	REFCLKIR<3:0>	
INT3	INT3R	INT3R<3:0>	0000 = RPA1 0001 = RPB5 0010 = RPB1 0011 = RPB11 0100 = RPB8 0101 = RPA8(2) 0110 = RPC8(2) 0111 = RPA9(2) 1000 = Reserved • • • 1111 = Reserved
T3CK	T3CKR	T3CKR<3:0>	
IC3	IC3R	IC3R<3:0>	
$\overline{U1CTS}$	U1CTSR	U1CTSR<3:0>	
U2RX	U2RXR	U2RXR<3:0>	
SDI1	SDI1R	SDI1R<3:0>	
INT2	INT2R	INT2R<3:0>	0000 = RPA2 0001 = RPB6 0010 = RPA4 0011 = RPB13 0100 = RPB2 0101 = RPC6(2) 0110 = RPC1(1) 0111 = RPC3(1) 1000 = Reserved • • • 1111 = Reserved
T4CK	T4CKR	T4CKR<3:0>	
IC1	IC1R	IC1R<3:0>	
IC5	IC5R	IC5R<3:0>	
U1RX	U1RXR	U1RXR<3:0>	
$\overline{U2CTS}$	U2CTSR	U2CTSR<3:0>	
SDI2	SDI2R	SDI2R<3:0>	
OCFB	OCFBR	OCFBR<3:0>	
INT1	INT1R	INT1R<3:0>	0000 = RPA3 0001 = RPB14 0010 = RPB0 0011 = RPB10 0100 = RPB9 0101 = RPC9(1) 0110 = RPC2(2) 0111 = RPC4(2) 1000 = Reserved • • • 1111 = Reserved
T5CK	T5CKR	T5CKR<3:0>	
IC2	IC2R	IC2R<3:0>	
$\overline{SS2}$	SS2R	SS2R<3:0>	
OCFA	OCFAR	OCFAR<3:0>	

Note 1: This pin is not available on 28-pin devices.

2: This pin is only available on 44-pin devices.

© 2011-2016 Microchip Technology Inc.

11.3.5 OUTPUT MAPPING

In contrast to inputs, the outputs of the PPS options are mapped on the basis of the pin. In this case, a control register associated with a particular pin dictates the peripheral output to be mapped. The RPnR registers (Register 11-2) are used to control output mapping. Like the [*pin name*]R registers, each register contains sets of 4 bit fields. The value of the bit field corresponds to one of the peripherals, and that peripheral's output is mapped to the pin (see Table 11-2 and Figure 11-3).

A null output is associated with the output register reset value of '0'. This is done to ensure that remappable outputs remain disconnected from all output pins by default.

FIGURE 11-3: EXAMPLE OF MULTIPLEXING OF REMAPPABLE OUTPUT FOR RPA0

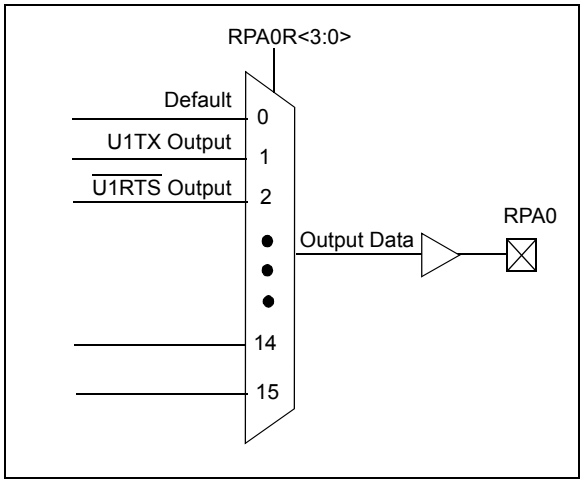

11.3.6 CONTROLLING CONFIGURATION CHANGES

Because peripheral remapping can be changed during run time, some restrictions on peripheral remapping are needed to prevent accidental configuration changes. PIC32 devices include two features to prevent alterations to the peripheral map:

- Control register lock sequence
- Configuration bit select lock

11.3.6.1 Control Register Lock Sequence

Under normal operation, writes to the RPnR and [*pin name*]R registers are not allowed. Attempted writes appear to execute normally, but the contents of the registers remain unchanged. To change these registers, they must be unlocked in hardware. The register lock is controlled by the Configuration bit, IOLOCK (CFGCON<13>). Setting IOLOCK prevents writes to the control registers; clearing IOLOCK allows writes.

To set or clear the IOLOCK bit, an unlock sequence must be executed. Refer to **Section 6. "Oscillator"** (DS60001112) in the *"PIC32 Family Reference Manual"* for details.

11.3.6.2 Configuration Bit Select Lock

As an additional level of safety, the device can be configured to prevent more than one write session to the RPnR and [*pin name*]R registers. The Configuration bit, IOL1WAY (DEVCFG3<29>), blocks the IOLOCK bit from being cleared after it has been set once. If IOLOCK remains set, the register unlock procedure does not execute, and the PPS control registers cannot be written to. The only way to clear the bit and re-enable peripheral remapping is to perform a device Reset.

In the default (unprogrammed) state, IOL1WAY is set, restricting users to one write session.

TABLE 11-2: OUTPUT PIN SELECTION

RPn Port Pin	RPnR SFR	RPnR bits	RPnR Value to Peripheral Selection
RPA0	RPA0R	RPA0R<3:0>	0000 = No Connect 0001 = U1TX 0010 = U2RTS 0011 = SS1 0100 = Reserved 0101 = OC1 0110 = Reserved 0111 = C2OUT 1000 = Reserved . . . 1111 = Reserved
RPB3	RPB3R	RPB3R<3:0>	
RPB4	RPB4R	RPB4R<3:0>	
RPB15	RPB15R	RPB15R<3:0>	
RPB7	RPB7R	RPB7R<3:0>	
RPC7	RPC7R	RPC7R<3:0>	
RPC0	RPC0R	RPC0R<3:0>	
RPC5	RPC5R	RPC5R<3:0>	
RPA1	RPA1R	RPA1R<3:0>	0000 = No Connect 0001 = Reserved 0010 = Reserved 0011 = SDO1 0100 = SDO2 0101 = OC2 0110 = Reserved 0111 = C3OUT . . . 1111 = Reserved
RPB5	RPB5R	RPB5R<3:0>	
RPB1	RPB1R	RPB1R<3:0>	
RPB11	RPB11R	RPB11R<3:0>	
RPB8	RPB8R	RPB8R<3:0>	
RPA8	RPA8R	RPA8R<3:0>	
RPC8	RPC8R	RPC8R<3:0>	
RPA9	RPA9R	RPA9R<3:0>	
RPA2	RPA2R	RPA2R<3:0>	0000 = No Connect 0001 = Reserved 0010 = Reserved 0011 = SDO1 0100 = SDO2 0101 = OC4 0110 = OC5 0111 = REFCLKO 1000 = Reserved . . . 1111 = Reserved
RPB6	RPB6R	RPB6R<3:0>	
RPA4	RPA4R	RPA4R<3:0>	
RPB13	RPB13R	RPB13R<3:0>	
RPB2	RPB2R	RPB2R<3:0>	
RPC6	RPC6R	RPC6R<3:0>	
RPC1	RPC1R	RPC1R<3:0>	
RPC3	RPC3R	RPC3R<3:0>	
RPA3	RPA3R	RPA3R<3:0>	0000 = No Connect 0001 = U1RTS 0010 = U2TX 0011 = Reserved 0100 = SS2 0101 = OC3 0110 = Reserved 0111 = C1OUT 1000 = Reserved . . . 1111 = Reserved
RPB14	RPB14R	RPB14R<3:0>	
RPB0	RPB0R	RPB0R<3:0>	
RPB10	RPB10R	RPB10R<3:0>	
RPB9	RPB9R	RPB9R<3:0>	
RPC9	RPC9R	RPC9R<3:0>	
RPC2	RPC2R	RPC2R<3:0>	
RPC4	RPC4R	RPC4R<3:0>	

© 2011-2016 Microchip Technology Inc.

11.4 Ports Control Registers

TABLE 11-3: PORTA REGISTER MAP

Virtual Address (BF88_#)	Register Name(1)	Bit Range	Bits 31/15	30/14	29/13	28/12	27/11	26/10	25/9	24/8	23/7	22/6	21/5	20/4	19/3	18/2	17/1	16/0	All Resets
6000	ANSELA	31:16	—	—	—	—	—	—	—	—	—	—	—	—	—	—	—	—	0000
		15:0	—	—	—	—	—	—	—	—	—	—	—	—	—	—	ANSA1	ANSA0	0003
6010	TRISA	31:16	—	—	—	—	—	—	—	—	—	—	—	—	—	—	—	—	0000
		15:0	—	—	—	—	—	TRISA10(2)	TRISA9(2)	TRISA8(2)	TRISA7(2)	—	—	TRISA4	TRISA3	TRISA2	TRISA1	TRISA0	079F
6020	PORTA	31:16	—	—	—	—	—	—	—	—	—	—	—						0000
		15:0	—	—	—	—	—	RA10(2)	RA9(2)	RA8(2)	RA7(2)	—	—	RA4	RA3	RA2	RA1	RA0	xxxx
6030	LATA	31:16	—	—	—	—	—	—	—	—	—	—	—	—	—	—	—	—	0000
		15:0	—	—	—	—	—	LATA10(2)	LATA9(2)	LATA8(2)	LATA7(2)	—	—	LATA4	LATA3	LATA2	LATA1	LATA0	xxxx
6040	ODCA	31:16	—	—	—	—	—	—	—	—	—	—	—	—	—	—	—	—	0000
		15:0	—	—	—	—	—	ODCA10(2)	ODCA9(2)	ODCA8(2)	ODCA7(2)	—	—	ODCA4	ODCA3	ODCA2	ODCA1	ODCA0	0000
6050	CNPUA	31:16	—	—	—	—	—	—	—	—	—	—	—	—	—	—	—	—	0000
		15:0	—	—	—	—	—	CNPUA10(2)	CNPUA9(2)	CNPUA8(2)	CNPUA7(2)	—	—	CNPUA4	CNPUA3	CNPUA2	CNPUA1	CNPUA0	0000
6060	CNPDA	31:16	—	—	—	—	—	—	—	—	—	—	—	—	—	—	—	—	0000
		15:0	—	—	—	—	—	CNPDA10(2)	CNPDA9(2)	CNPDA8(2)	CNPDA7(2)	—	—	CNPDA4	CNPDA3	CNPDA2	CNPDA1	CNPDA0	0000
6070	CNCONA	31:16	—	—	—	—	—	—	—	—	—	—	—	—	—	—	—	—	0000
		15:0	ON	—	SIDL	—	—	—	—	—	—	—	—	—	—	—	—	—	0000
6080	CNENA	31:16	—	—	—	—	—	—	—	—	—	—	—	—	—	—	—	—	0000
		15:0	—	—	—	—	—	CNIEA10(2)	CNIEA9(2)	CNIEA8(2)	CNIEA7(2)	—	—	CNIEA4	CNIEA3	CNIEA2	CNIEA1	CNIEA0	0000
6090	CNSTATA	31:16	—	—	—	—	—	—	—	—	—	—	—	—	—	—	—	—	0000
		15:0	—	—	—	—	—	CNSTATA10(2)	CNSTATA9(2)	CNSTATA8(2)	CNSTATA7(2)	—	—	CNSTATA4	CNSTATA3	CNSTATA2	CNSTATA1	CNSTATA0	0000

Legend: x = unknown value on Reset; — = unimplemented, read as '0'. Reset values are shown in hexadecimal.

Note 1: All registers in this table have corresponding CLR, SET and INV registers at their virtual addresses, plus offsets of 0x4, 0x8 and 0xC, respectively. See **Section 11.2 "CLR, SET and INV Registers"** for more information.

2: This bit is only available on 44-pin devices.

© 2011-2016 Microchip Technology Inc.

TABLE 11-4: PORTB REGISTER MAP

Virtual Address (BF88_#)	Register Name	Bit Range	Bits																All Resets
			31/15	30/14	29/13	28/12	27/11	26/10	25/9	24/8	23/7	22/6	21/5	20/4	19/3	18/2	17/1	16/0	
6100	ANSELB	31:16	—	—	—	—	—	—	—	—	—	—	—	—	—	—	—	—	0000
		15:0	ANSB15	ANSB14	ANSB13	ANSB12(2)	—	—	—	—	—	—	—	—	ANSB3	ANSB2	ANSB1	ANSB0	E00F
6110	TRISB	31:16	—	—	—	—	—	—	—	—	—	—	—	—	—	—	—	—	0000
		15:0	TRISB15	TRISB14	TRISB13	TRISB12(2)	TRISB11	TRISB10	TRISB9	TRISB8	TRISB7	TRISB6(2)	TRISB5	TRISB4	TRISB3	TRISB2	TRISB1	TRISB0	FFFF
6120	PORTB	31:16	—	—	—	—	—	—	—	—	—	—	—						0000
		15:0	RB15	RB14	RB13	RB12(2)	RB11	RB10	RB9	RB8	RB7	RC6(2)	RB5	RB4	RB3	RB2	RB1	RB0	xxxx
6130	LATB	31:16	—	—	—	—	—	—	—	—	—	—	—	—	—	—	—	—	0000
		15:0	LATB15	LATB14	LATB13	LATB12(2)	LATB11	LATB10	LATB9	LATB8	LATB7	LATB6(2)	LATB5	LATB4	LATB3	LATB2	LATB1	LATB0	xxxx
6140	ODCB	31:16	—	—	—	—	—	—	—	—	—	—	—	—	—	—	—	—	0000
		15:0	ODCB15	ODCB14	ODCB13	ODCB12(2)	ODCB11	ODCB10	ODCB9	ODCB8	ODCB7	ODCB6	ODCB5	ODCB4	ODCB3	ODCB2	ODCB1	ODCB0	0000
6150	CNPUB	31:16	—	—	—	—	—	—	—	—	—	—	—	—	—	—	—	—	0000
		15:0	CNPUB15	CNPUB14	CNPUB13	CNPUB12(2)	CNPUB11	CNPUB10	CNPUB9	CNPUB8	CNPUB7	CNPUB6(2)	CNPUB5	CNPUB4	CNPUB3	CNPUB2	CNPUB1	CNPUB0	0000
6160	CNPDB	31:16	—	—	—	—	—	—	—	—	—	—	—	—	—	—	—	—	0000
		15:0	CNPDB15	CNPDB14	CNPDB13	CNPDB12(2)	CNPDB11	CNPDB10	CNPDB9	CNPDB8	CNPDB7	CNPDB6(2)	CNPDB5	CNPDB4	CNPDB3	CNPDB2	CNPDB1	CNPDB0	0000
6170	CNCONB	31:16	—	—	—	—	—	—	—	—	—	—	—	—	—	—	—	—	0000
		15:0	ON	—	SIDL	—	—	—	—	—	—	—	—	—	—	—	—	—	0000
6180	CNENB	31:16	—	—	—	—	—	—	—	—	—	—	—	—	—	—	—	—	0000
		15:0	CNIEB15	CNIEB14	CNIEB13	CNIEB11(2)	CNIEB11	CNIEB10	CNIEB9	CNIEB8	CNIEB7	CNIEB6(2)	CNIEB5	CNIEB4	CNIEB3	CNIEB2	CNIEB1	CNIEB0	0000
6190	CNSTATB	31:16	—	—	—	—	—	—	—	—	—	—	—	—	—	—	—	—	0000
		15:0	CN STATB15	CN STATB14	CN STATB13	CN STATB12(2)	CN STATB11	CN STATB10	CN STATB9	CN STATB8	CN STATB7	CN STATB6(2)	CN STATB5	CN STATB4	CN STATB3	CN STATB2	CN STATB1	CN STATB0	0000

Legend: x = unknown value on Reset; — = unimplemented, read as '0'. Reset values are shown in hexadecimal.

Note 1: All registers in this table have corresponding CLR, SET and INV registers at their virtual addresses, plus offsets of 0x4, 0x8 and 0xC, respectively. See **Section 11.2 "CLR, SET and INV Registers"** for more information.

2: This bit is not available on PIC32MX2XX devices. The reset value for the TRISB register when this bit is not available is 0x0000EFBF.

© 2011-2016 Microchip Technology Inc.

TABLE 11-5: PORTC REGISTER MAP

Virtual Address (BF88_#)	Register Name(1,2)	Bit Range	Bits 31/15	30/14	29/13	28/12	27/11	26/10	25/9	24/8	23/7	22/6	21/5	20/4	19/3	18/2	17/1	16/0	All Resets
6200	ANSELC	31:16	—	—	—	—	—	—	—	—	—	—	—	—	—	—	—	—	0000
		15:0	—	—	—	—	—	—	—	—	—	—	—	—	ANSC3(4)	ANSC2(3)	ANSC1	ANSC0	000F
6210	TRISC	31:16	—	—	—	—	—	—	—	—	—	—	—	—	—	—	—	—	0000
		15:0	—	—	—	—	—	—	TRISC9	TRISC8(3)	TRISC7(3)	TRISC6(3)	TRISC5(3)	TRISC4(3)	TRISC3	TRISC2(3)	TRISC1	TRISC0	03FF
6220	PORTC	31:16	—	—	—	—	—	—	—	—	—	—	—						0000
		15:0	—	—	—	—	—	—	RC9	RC8(3)	RC7(3)	RC6(3)	RC5(3)	RC4(3)	RC3	RC2(3)	RC1	RC0	xxxx
6230	LATC	31:16	—	—	—	—	—	—	—	—	—	—	—	—	—	—	—	—	0000
		15:0	—	—	—	—	—	—	LATC9	LATC8(3)	LATC7(3)	LATC6(3)	LATC5(3)	LATC4(3)	LATC3	LATC2(3)	LATC1	LATC0	xxxx
6240	ODCC	31:16	—	—	—	—	—	—	—	—	—	—	—	—	—	—	—	—	0000
		15:0	—	—	—	—	—	—	ODCC9	ODCC8(3)	ODCC7(3)	ODCC6(3)	ODCC5(3)	ODCC4(3)	ODCC3	ODCC2(3)	ODCC1	ODCC0	0000
6250	CNPUC	31:16	—	—	—	—	—	—	—	—	—	—	—	—	—	—	—	—	0000
		15:0	—	—	—	—	—	—	CNPUC9	CNPUC8(3)	CNPUC7(3)	CNPUC6(3)	CNPUC5(3)	CNPUC4(3)	CNPUC3	CNPUC2(3)	CNPUC1	CNPUC0	0000
6260	CNPDC	31:16	—	—	—	—	—	—	—	—	—	—	—	—	—	—	—	—	0000
		15:0	—	—	—	—	—	—	CNPDC9	CNPDC8(3)	CNPDC7(3)	CNPDC6(3)	CNPDC5(3)	CNPDC4(3)	CNPDC3	CNPDC2(3)	CNPDC1	CNPDC0	0000
6270	CNCONC	31:16	—	—	—	—	—	—	—	—	—	—	—	—	—	—	—	—	0000
		15:0	ON	—	SIDL	—	—	—	—	—	—	—	—	—	—	—	—	—	0000
6280	CNENC	31:16	—	—	—	—	—	—	—	—	—	—	—	—	—	—	—	—	0000
		15:0	—	—	—	—	—	—	CNIEC9	CNIEC8(3)	CNIEC7(3)	CNIEC6(3)	CNIEC5(3)	CNIEC4(3)	CNIEC3	CNIEC2(3)	CNIEC1	CNIEC0	0000
6290	CNSTATC	31:16	—	—	—	—	—	—	—	—	—	—	—	—	—	—	—	—	0000
		15:0	—	—	—	—	—	—	CNSTATC9	CNSTATC8(3)	CNSTATC7(3)	CNSTATC6(3)	CNSTATC5(3)	CNSTATC4(3)	CNSTATC3	CNSTATC2(3)	CNSTATC1	CNSTATC0	0000

Legend: x = unknown value on Reset; — = unimplemented, read as ‘0’. Reset values are shown in hexadecimal.

Note 1: All registers in this table have corresponding CLR, SET and INV registers at their virtual addresses, plus offsets of 0x4, 0x8 and 0xC, respectively. See **Section 11.2 “CLR, SET and INV Registers”** for more information.

2: PORTC is not available on 28-pin devices.

3: This bit is only available on 44-pin devices.

4: This bit is only available on USB-enabled devices with 36 or 44 pins.

© 2011-2016 Microchip Technology Inc.

TABLE 11-6: PERIPHERAL PIN SELECT INPUT REGISTER MAP

Virtual Address (BF80_#)	Register Name	Bit Range	Bits																All Resets
			31/15	30/14	29/13	28/12	27/11	26/10	25/9	24/8	23/7	22/6	21/5	20/4	19/3	18/2	17/1	16/0	
FA04	INT1R	31:16	—	—	—	—	—	—	—	—	—	—	—	—	—	—	—	—	0000
		15:0	—	—	—	—	—	—	—	—	—	—	—	—	INT1R<3:0>				0000
FA08	INT2R	31:16	—	—	—	—	—	—	—	—	—	—	—	—	—	—	—	—	0000
		15:0	—	—	—	—	—	—	—	—	—	—	—	—	INT2R<3:0>				0000
FA0C	INT3R	31:16	—	—	—	—	—	—	—	—	—	—	—	—	—	—	—	—	0000
		15:0	—	—	—	—	—	—	—	—	—	—	—	—	INT3R<3:0>				0000
FA10	INT4R	31:16	—	—	—	—	—	—	—	—	—	—	—	—	—	—	—	—	0000
		15:0	—	—	—	—	—	—	—	—	—	—	—	—	INT4R<3:0>				0000
FA18	T2CKR	31:16	—	—	—	—	—	—	—	—	—	—	—	—	—	—	—	—	0000
		15:0	—	—	—	—	—	—	—	—	—	—	—	—	T2CKR<3:0>				0000
FA1C	T3CKR	31:16	—	—	—	—	—	—	—	—	—	—	—	—	—	—	—	—	0000
		15:0	—	—	—	—	—	—	—	—	—	—	—	—	T3CKR<3:0>				0000
FA20	T4CKR	31:16	—	—	—	—	—	—	—	—	—	—	—	—	—	—	—	—	0000
		15:0	—	—	—	—	—	—	—	—	—	—	—	—	T4CKR<3:0>				0000
FA24	T5CKR	31:16	—	—	—	—	—	—	—	—	—	—	—	—	—	—	—	—	0000
		15:0	—	—	—	—	—	—	—	—	—	—	—	—	T5CKR<3:0>				0000
FA28	IC1R	31:16	—	—	—	—	—	—	—	—	—	—	—	—	—	—	—	—	0000
		15:0	—	—	—	—	—	—	—	—	—	—	—	—	IC1R<3:0>				0000
FA2C	IC2R	31:16	—	—	—	—	—	—	—	—	—	—	—	—	—	—	—	—	0000
		15:0	—	—	—	—	—	—	—	—	—	—	—	—	IC2R<3:0>				0000
FA30	IC3R	31:16	—	—	—	—	—	—	—	—	—	—	—	—	—	—	—	—	0000
		15:0	—	—	—	—	—	—	—	—	—	—	—	—	IC3R<3:0>				0000
FA34	IC4R	31:16	—	—	—	—	—	—	—	—	—	—	—	—	—	—	—	—	0000
		15:0	—	—	—	—	—	—	—	—	—	—	—	—	IC4R<3:0>				0000
FA38	IC5R	31:16	—	—	—	—	—	—	—	—	—	—	—	—	—	—	—	—	0000
		15:0	—	—	—	—	—	—	—	—	—	—	—	—	IC5R<3:0>				0000
FA48	OCFAR	31:16	—	—	—	—	—	—	—	—	—	—	—	—	—	—	—	—	0000
		15:0	—	—	—	—	—	—	—	—	—	—	—	—	OCFAR<3:0>				0000
FA4C	OCFBR	31:16	—	—	—	—	—	—	—	—	—	—	—	—	—	—	—	—	0000
		15:0	—	—	—	—	—	—	—	—	—	—	—	—	OCFBR<3:0>				0000
FA50	U1RXR	31:16	—	—	—	—	—	—	—	—	—	—	—	—	—	—	—	—	0000
		15:0	—	—	—	—	—	—	—	—	—	—	—	—	U1RXR<3:0>				0000

© 2011-2016 Microchip Technology Inc.

TABLE 11-6: PERIPHERAL PIN SELECT INPUT REGISTER MAP (CONTINUED)

Virtual Address (BF80_#)	Register Name	Bit Range	Bits																All Resets
			31/15	30/14	29/13	28/12	27/11	26/10	25/9	24/8	23/7	22/6	21/5	20/4	19/3	18/2	17/1	16/0	
FA54	U1CTSR	31:16	—	—	—	—	—	—	—	—	—	—	—	—	—	—	—	—	0000
		15:0	—	—	—	—	—	—	—	—	—	—	—	—	U1CTSR<3:0>				0000
FA58	U2RXR	31:16	—	—	—	—	—	—	—	—	—	—	—	—	—	—	—	—	0000
		15:0	—	—	—	—	—	—	—	—	—	—	—	—	U2RXR<3:0>				0000
FA5C	U2CTSR	31:16	—	—	—	—	—	—	—	—	—	—	—	—	—	—	—	—	0000
		15:0	—	—	—	—	—	—	—	—	—	—	—	—	U2CTSR<3:0>				0000
FA84	SDI1R	31:16	—	—	—	—	—	—	—	—	—	—	—	—	—	—	—	—	0000
		15:0	—	—	—	—	—	—	—	—	—	—	—	—	SDI1R<3:0>				0000
FA88	SS1R	31:16	—	—	—	—	—	—	—	—	—	—	—	—	—	—	—	—	0000
		15:0	—	—	—	—	—	—	—	—	—	—	—	—	SS1R<3:0>				0000
FA90	SDI2R	31:16	—	—	—	—	—	—	—	—	—	—	—	—	—	—	—	—	0000
		15:0	—	—	—	—	—	—	—	—	—	—	—	—	SDI2R<3:0>				0000
FA94	SS2R	31:16	—	—	—	—	—	—	—	—	—	—	—	—	—	—	—	—	0000
		15:0	—	—	—	—	—	—	—	—	—	—	—	—	SS2R<3:0>				0000
FAB8	REFCLKIR	31:16	—	—	—	—	—	—	—	—	—	—	—	—	—	—	—	—	0000
		15:0	—	—	—	—	—	—	—	—	—	—	—	—	REFCLKIR<3:0>				0000

© 2011-2016 Microchip Technology Inc.

TABLE 11-7: PERIPHERAL PIN SELECT OUTPUT REGISTER MAP

Virtual Address (BF80_#)	Register Name	Bit Range	Bits																All Resets
			31/15	30/14	29/13	28/12	27/11	26/10	25/9	24/8	23/7	22/6	21/5	20/4	19/3	18/2	17/1	16/0	
FB00	RPA0R	31:16	—	—	—	—	—	—	—	—	—	—	—	—	—	—	—	—	0000
		15:0	—	—	—	—	—	—	—	—	—	—	—	—	RPA0<3:0>				0000
FB04	RPA1R	31:16	—	—	—	—	—	—	—	—	—	—	—	—	—	—	—	—	0000
		15:0	—	—	—	—	—	—	—	—	—	—	—	—	RPA1<3:0>				0000
FB08	RPA2R	31:16	—	—	—	—	—	—	—	—	—	—	—	—	—	—	—	—	0000
		15:0	—	—	—	—	—	—	—	—	—	—	—	—	RPA2<3:0>				0000
FB0C	RPA3R	31:16	—	—	—	—	—	—	—	—	—	—	—	—	—	—	—	—	0000
		15:0	—	—	—	—	—	—	—	—	—	—	—	—	RPA3<3:0>				0000
FB10	RPA4R	31:16	—	—	—	—	—	—	—	—	—	—	—	—	—	—	—	—	0000
		15:0	—	—	—	—	—	—	—	—	—	—	—	—	RPA4<3:0>				0000
FB20	RPA8R(1)	31:16	—	—	—	—	—	—	—	—	—	—	—	—	—	—	—	—	0000
		15:0	—	—	—	—	—	—	—	—	—	—	—	—	RPA8<3:0>				0000
FB24	RPA9R(1)	31:16	—	—	—	—	—	—	—	—	—	—	—	—	—	—	—	—	0000
		15:0	—	—	—	—	—	—	—	—	—	—	—	—	RPA9<3:0>				0000
FB2C	RPB0R	31:16	—	—	—	—	—	—	—	—	—	—	—	—	—	—	—	—	0000
		15:0	—	—	—	—	—	—	—	—	—	—	—	—	RPB0<3:0>				0000
FB30	RPB1R	31:16	—	—	—	—	—	—	—	—	—	—	—	—	—	—	—	—	0000
		15:0	—	—	—	—	—	—	—	—	—	—	—	—	RPB1<3:0>				0000
FB34	RPB2R	31:16	—	—	—	—	—	—	—	—	—	—	—	—	—	—	—	—	0000
		15:0	—	—	—	—	—	—	—	—	—	—	—	—	RPB2<3:0>				0000
FB38	RPB3R	31:16	—	—	—	—	—	—	—	—	—	—	—	—	—	—	—	—	0000
		15:0	—	—	—	—	—	—	—	—	—	—	—	—	RPB3<3:0>				0000
FB3C	RPB4R	31:16	—	—	—	—	—	—	—	—	—	—	—	—	—	—	—	—	0000
		15:0	—	—	—	—	—	—	—	—	—	—	—	—	RPB4<3:0>				0000
FB40	RPB5R	31:16	—	—	—	—	—	—	—	—	—	—	—	—	—	—	—	—	0000
		15:0	—	—	—	—	—	—	—	—	—	—	—	—	RPB5<3:0>				0000
FB44	RPB6R(2)	31:16	—	—	—	—	—	—	—	—	—	—	—	—	—	—	—	—	0000
		15:0	—	—	—	—	—	—	—	—	—	—	—	—	RPB6<3:0>				0000
FB48	RPB7R	31:16	—	—	—	—	—	—	—	—	—	—	—	—	—	—	—	—	0000
		15:0	—	—	—	—	—	—	—	—	—	—	—	—	RPB7<3:0>				0000

Legend: x = unknown value on Reset; — = unimplemented, read as '0'. Reset values are shown in hexadecimal.

Note 1: This register is only available on 44-pin devices.
2: This register is only available on PIC32MX1XX devices.
3: This register is only available on 36-pin and 44-pin devices.

© 2011-2016 Microchip Technology Inc.

TABLE 11-7: PERIPHERAL PIN SELECT OUTPUT REGISTER MAP (CONTINUED)

Virtual Address (BF80_#)	Register Name	Bit Range	Bits																All Resets
			31/15	30/14	29/13	28/12	27/11	26/10	25/9	24/8	23/7	22/6	21/5	20/4	19/3	18/2	17/1	16/0	
FB4C	RPB8R	31:16	—	—	—	—	—	—	—	—	—	—	—	—	—	—	—	—	0000
		15:0	—	—	—	—	—	—	—	—	—	—	—	—	RPB8<3:0>				0000
FB50	RPB9R	31:16	—	—	—	—	—	—	—	—	—	—	—	—	—	—	—	—	0000
		15:0	—	—	—	—	—	—	—	—	—	—	—	—	RPB9<3:0>				0000
FB54	RPB10R	31:16	—	—	—	—	—	—	—	—	—	—	—	—	—	—	—	—	0000
		15:0	—	—	—	—	—	—	—	—	—	—	—	—	RPB10<3:0>				0000
FB58	RPB11R	31:16	—	—	—	—	—	—	—	—	—	—	—	—	—	—	—	—	0000
		15:0	—	—	—	—	—	—	—	—	—	—	—	—	RPB11<3:0>				0000
FB60	RPB13R	31:16	—	—	—	—	—	—	—	—	—	—	—	—	—	—	—	—	0000
		15:0	—	—	—	—	—	—	—	—	—	—	—	—	RPB13<3:0>				0000
FB64	RPB14R	31:16	—	—	—	—	—	—	—	—	—	—	—	—	—	—	—	—	0000
		15:0	—	—	—	—	—	—	—	—	—	—	—	—	RPB14<3:0>				0000
FB68	RPB15R	31:16	—	—	—	—	—	—	—	—	—	—	—	—	—	—	—	—	0000
		15:0	—	—	—	—	—	—	—	—	—	—	—	—	RPB15<3:0>				0000
FB6C	RPC0R(3)	31:16	—	—	—	—	—	—	—	—	—	—	—	—	—	—	—	—	0000
		15:0	—	—	—	—	—	—	—	—	—	—	—	—	RPC0<3:0>				0000
FB70	RPC1R(3)	31:16	—	—	—	—	—	—	—	—	—	—	—	—	—	—	—	—	0000
		15:0	—	—	—	—	—	—	—	—	—	—	—	—	RPC1<3:0>				0000
FB74	RPC2R(1)	31:16	—	—	—	—	—	—	—	—	—	—	—	—	—	—	—	—	0000
		15:0	—	—	—	—	—	—	—	—	—	—	—	—	RPC2<3:0>				0000
FB78	RPC3R(3)	31:16	—	—	—	—	—	—	—	—	—	—	—	—	—	—	—	—	0000
		15:0	—	—	—	—	—	—	—	—	—	—	—	—	RPC3<3:0>				0000
FB7C	RPC4R(1)	31:16	—	—	—	—	—	—	—	—	—	—	—	—	—	—	—	—	0000
		15:0	—	—	—	—	—	—	—	—	—	—	—	—	RPC4<3:0>				0000
FB80	RPC5R(1)	31:16	—	—	—	—	—	—	—	—	—	—	—	—	—	—	—	—	0000
		15:0	—	—	—	—	—	—	—	—	—	—	—	—	RPC5<3:0>				0000
FB84	RPC6R(1)	31:16	—	—	—	—	—	—	—	—	—	—	—	—	—	—	—	—	0000
		15:0	—	—	—	—	—	—	—	—	—	—	—	—	RPC6<3:0>				0000
FB88	RPC7R(1)	31:16	—	—	—	—	—	—	—	—	—	—	—	—	—	—	—	—	0000
		15:0	—	—	—	—	—	—	—	—	—	—	—	—	RPC7<3:0>				0000

Legend: x = unknown value on Reset; — = unimplemented, read as '0'. Reset values are shown in hexadecimal.

Note 1: This register is only available on 44-pin devices.
2: This register is only available on PIC32MX1XX devices.
3: This register is only available on 36-pin and 44-pin devices.

© 2011-2016 Microchip Technology Inc.

TABLE 11-7: PERIPHERAL PIN SELECT OUTPUT REGISTER MAP (CONTINUED)

Virtual Address (BF80_#)	Register Name	Bit Range	Bits																All Resets
			31/15	30/14	29/13	28/12	27/11	26/10	25/9	24/8	23/7	22/6	21/5	20/4	19/3	18/2	17/1	16/0	
FB8C	RPC8R(1)	31:16	—	—	—	—	—	—	—	—	—	—	—	—	—	—	—	—	0000
		15:0	—	—	—	—	—	—	—	—	—	—	—	—	RPC8<3:0>				0000
FB90	RPC9R(3)	31:16	—	—	—	—	—	—	—	—	—	—	—	—	—	—	—	—	0000
		15:0	—	—	—	—	—	—	—	—	—	—	—	—	RPC9<3:0>				0000

Legend: x = unknown value on Reset; — = unimplemented, read as '0'. Reset values are shown in hexadecimal.

Note 1: This register is only available on 44-pin devices.
2: This register is only available on PIC32MX1XX devices.
3: This register is only available on 36-pin and 44-pin devices.

© 2011-2016 Microchip Technology Inc.

REGISTER 11-1: [*pin name*]R: PERIPHERAL PIN SELECT INPUT REGISTER

Bit Range	Bit 31/23/15/7	Bit 30/22/14/6	Bit 29/21/13/5	Bit 28/20/12/4	Bit 27/19/11/3	Bit 26/18/10/2	Bit 25/17/9/1	Bit 24/16/8/0
31:24	U-0	U-0	U-0	U-0	U-0	U-0	U-0	U-0
	—	—	—	—	—	—	—	—
23:16	U-0	U-0	U-0	U-0	U-0	U-0	U-0	U-0
	—	—	—	—	—	—	—	—
15:8	U-0	U-0	U-0	U-0	U-0	U-0	U-0	U-0
	—	—	—	—	—	—	—	—
7:0	U-0	U-0	U-0	U-0	R/W-0	R/W-0	R/W-0	R/W-0
	—	—	—	—	[*pin name*]R<3:0>			

Legend:			
R = Readable bit	W = Writable bit	U = Unimplemented bit, read as ‘0’	
-n = Value at POR	‘1’ = Bit is set	‘0’ = Bit is cleared	x = Bit is unknown

bit 31-4 **Unimplemented:** Read as ‘0’

bit 3-0 **[*pin name*]R<3:0>:** Peripheral Pin Select Input bits
Where [*pin name*] refers to the pins that are used to configure peripheral input mapping. See Table 11-1 for input pin selection values.

Note: Register values can only be changed if the Configuration bit, IOLOCK (CFGCON<13>), = 0.

REGISTER 11-2: RPnR: PERIPHERAL PIN SELECT OUTPUT REGISTER

Bit Range	Bit 31/23/15/7	Bit 30/22/14/6	Bit 29/21/13/5	Bit 28/20/12/4	Bit 27/19/11/3	Bit 26/18/10/2	Bit 25/17/9/1	Bit 24/16/8/0
31:24	U-0	U-0	U-0	U-0	U-0	U-0	U-0	U-0
	—	—	—	—	—	—	—	—
23:16	U-0	U-0	U-0	U-0	U-0	U-0	U-0	U-0
	—	—	—	—	—	—	—	—
15:8	U-0	U-0	U-0	U-0	U-0	U-0	U-0	U-0
	—	—	—	—	—	—	—	—
7:0	U-0	U-0	U-0	U-0	R/W-0	R/W-0	R/W-0	R/W-0
	—	—	—	—	RPnR<3:0>			

Legend:			
R = Readable bit	W = Writable bit	U = Unimplemented bit, read as ‘0’	
-n = Value at POR	‘1’ = Bit is set	‘0’ = Bit is cleared	x = Bit is unknown

bit 31-4 **Unimplemented:** Read as ‘0’

bit 3-0 **RPnR<3:0>:** Peripheral Pin Select Output bits
See Table 11-2 for output pin selection values.

Note: Register values can only be changed if the Configuration bit, IOLOCK (CFGCON<13>), = 0.

REGISTER 11-3: CNCONx: CHANGE NOTICE CONTROL FOR PORTx REGISTER (x = A, B, C)

Bit Range	Bit 31/23/15/7	Bit 30/22/14/6	Bit 29/21/13/5	Bit 28/20/12/4	Bit 27/19/11/3	Bit 26/18/10/2	Bit 25/17/9/1	Bit 24/16/8/0
31:24	U-0	U-0	U-0	U-0	U-0	U-0	U-0	U-0
	—	—	—	—	—	—	—	—
23:16	U-0	U-0	U-0	U-0	U-0	U-0	U-0	U-0
	—	—	—	—	—	—	—	—
15:8	R/W-0	U-0	R/W-0	U-0	U-0	U-0	U-0	U-0
	ON	—	SIDL	—	—	—	—	—
7:0	U-0	U-0	U-0	U-0	U-0	U-0	U-0	U-0
	—	—	—	—	—	—	—	—

Legend:			
R = Readable bit	W = Writable bit	U = Unimplemented bit, read as ‘0’	
-n = Value at POR	‘1’ = Bit is set	‘0’ = Bit is cleared	x = Bit is unknown

bit 31-16 **Unimplemented:** Read as ‘0’

bit 15 **ON:** Change Notice (CN) Control ON bit
1 = CN is enabled
0 = CN is disabled

bit 14 **Unimplemented:** Read as ‘0’

bit 13 **SIDL:** Stop in Idle Control bit
1 = Idle mode halts CN operation
0 = Idle does not affect CN operation

bit 12-0 **Unimplemented:** Read as ‘0’

© 2011-2016 Microchip Technology Inc.

12.0 TIMER1

Note: This data sheet summarizes the features of the PIC32MX1XX/2XX 28/36/44-pin Family of devices. It is not intended to be a comprehensive reference source. To complement the information in this data sheet, refer to **Section 14. "Timers"** (DS60001105), which is available from the *Documentation > Reference Manual* section of the Microchip PIC32 web site (www.microchip.com/pic32).

This family of PIC32 devices features one synchronous/asynchronous 16-bit timer that can operate as a free-running interval timer for various timing applications and counting external events. This timer can also be used with the Low-Power Secondary Oscillator (SOSC) for Real-Time Clock (RTC) applications.

The following modes are supported:

- Synchronous Internal Timer
- Synchronous Internal Gated Timer
- Synchronous External Timer
- Asynchronous External Timer

12.1 Additional Supported Features

- Selectable clock prescaler
- Timer operation during CPU Idle and Sleep mode
- Fast bit manipulation using CLR, SET and INV registers
- Asynchronous mode can be used with the SOSC to function as a Real-Time Clock (RTC)

Figure 12-1 illustrates a general block diagram of Timer1.

FIGURE 12-1: TIMER1 BLOCK DIAGRAM

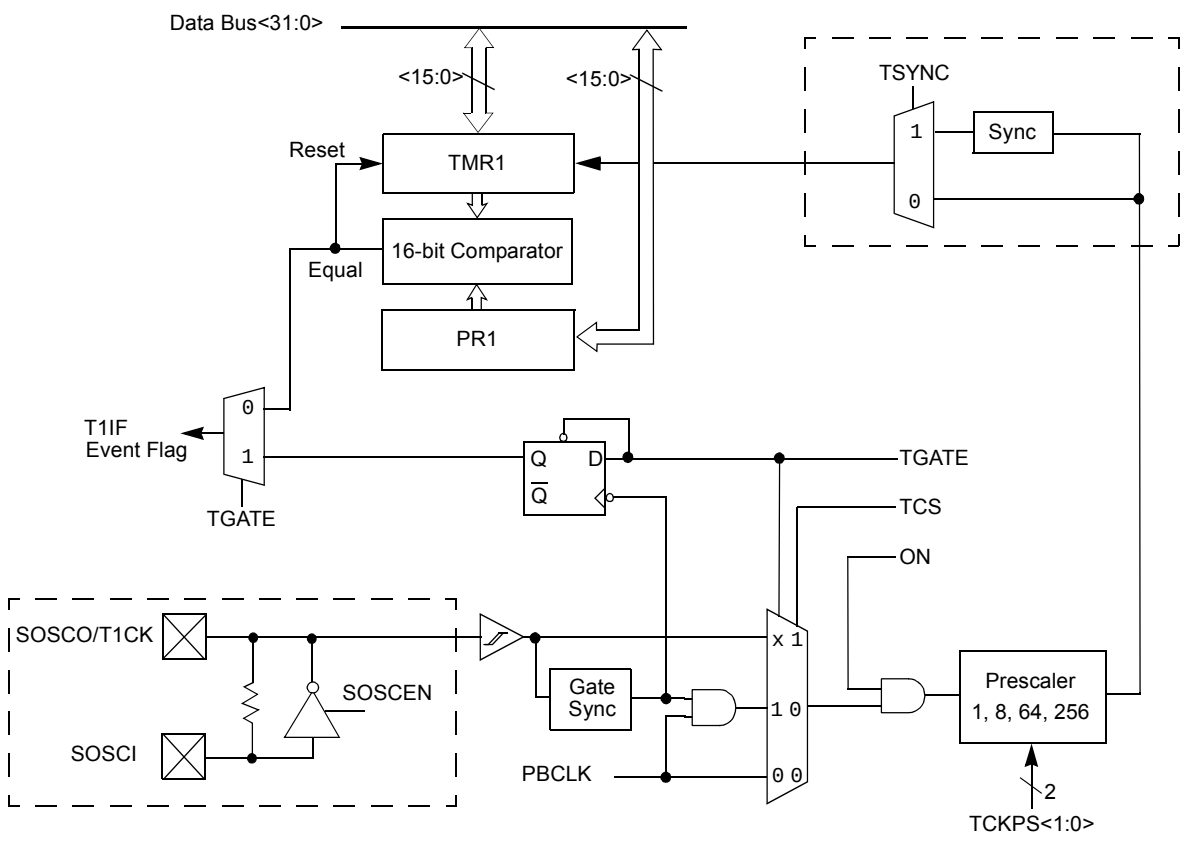

Note: The default state of the SOSCEN (OSCCON<1>) bit during a device Reset is controlled by the FSOSCEN bit in Configuration Word, DEVCFG1.

12.2 Timer1 Control Registers

TABLE 12-1: TIMER1 REGISTER MAP

Virtual Address (BF80_#)	Register Name(1)	Bit Range	Bits																All Resets
			31/15	30/14	29/13	28/12	27/11	26/10	25/9	24/8	23/7	22/6	21/5	20/4	19/3	18/2	17/1	16/0	
0600	T1CON	31:16	—	—	—	—	—	—	—	—	—	—	—	—	—	—	—	—	0000
		15:0	ON	—	SIDL	TWDIS	TWIP	—	—	—	TGATE	—	TCKPS<1:0>		—	TSYNC	TCS	—	0000
0610	TMR1	31:16	—	—	—	—	—	—	—	—	—	—	—	—	—	—	—	—	0000
		15:0	TMR1<15:0>																0000
0620	PR1	31:16	—	—	—	—	—	—	—	—	—	—	—	—	—	—	—	—	0000
		15:0	PR1<15:0>																FFFF

Legend: x = unknown value on Reset; — = unimplemented, read as ‘0’. Reset values are shown in hexadecimal.

Note 1: All registers in this table have corresponding CLR, SET and INV registers at their virtual addresses, plus offsets of 0x4, 0x8 and 0xC, respectively. See **Section 11.2 “CLR, SET and INV Registers”** for more information.

© 2011-2016 Microchip Technology Inc.

REGISTER 12-1: T1CON: TYPE A TIMER CONTROL REGISTER

Bit Range	Bit 31/23/15/7	Bit 30/22/14/6	Bit 29/21/13/5	Bit 28/20/12/4	Bit 27/19/11/3	Bit 26/18/10/2	Bit 25/17/9/1	Bit 24/16/8/0
31:24	U-0	U-0	U-0	U-0	U-0	U-0	U-0	U-0
	—	—	—	—	—	—	—	—
23:16	U-0	U-0	U-0	U-0	U-0	U-0	U-0	U-0
	—	—	—	—	—	—	—	—
15:8	R/W-0	U-0	R/W-0	R/W-0	R-0	U-0	U-0	U-0
	ON(1)	—	SIDL	TWDIS	TWIP	—	—	—
7:0	R/W-0	U-0	R/W-0	R/W-0	U-0	R/W-0	R/W-0	U-0
	TGATE	—	TCKPS<1:0>		—	TSYNC	TCS	—

Legend:			
R = Readable bit	W = Writable bit	U = Unimplemented bit, read as ‘0’	
-n = Value at POR	‘1’ = Bit is set	‘0’ = Bit is cleared	x = Bit is unknown

bit 31-16 **Unimplemented:** Read as ‘0’

bit 15 **ON:** Timer On bit(1)
1 = Timer is enabled
0 = Timer is disabled

bit 14 **Unimplemented:** Read as ‘0’

bit 13 **SIDL:** Stop in Idle Mode bit
1 = Discontinue module operation when the device enters Idle mode
0 = Continue module operation when the device enters Idle mode

bit 12 **TWDIS:** Asynchronous Timer Write Disable bit
1 = Writes to Timer1 are ignored until pending write operation completes
0 = Back-to-back writes are enabled (Legacy Asynchronous Timer functionality)

bit 11 **TWIP:** Asynchronous Timer Write in Progress bit
In Asynchronous Timer mode:
1 = Asynchronous write to the Timer1 register in progress
0 = Asynchronous write to Timer1 register is complete
In Synchronous Timer mode:
This bit is read as ‘0’.

bit 10-8 **Unimplemented:** Read as ‘0’

bit 7 **TGATE:** Timer Gated Time Accumulation Enable bit
When TCS = 1:
This bit is ignored.
When TCS = 0:
1 = Gated time accumulation is enabled
0 = Gated time accumulation is disabled

bit 6 **Unimplemented:** Read as ‘0’

bit 5-4 **TCKPS<1:0>:** Timer Input Clock Prescale Select bits
11 = 1:256 prescale value
10 = 1:64 prescale value
01 = 1:8 prescale value
00 = 1:1 prescale value

Note 1: When using 1:1 PBCmLK divisor, the user’s software should not read/write the peripheral SFRs in the SYSCLK cycle immediately following the instruction that clears the module’s ON bit.

REGISTER 12-1: T1CON: TYPE A TIMER CONTROL REGISTER (CONTINUED)

bit 3 **Unimplemented:** Read as '0'

bit 2 **TSYNC:** Timer External Clock Input Synchronization Selection bit

When TCS = 1:
1 = External clock input is synchronized
0 = External clock input is not synchronized

When TCS = 0:
This bit is ignored.

bit 1 **TCS:** Timer Clock Source Select bit

1 = External clock from TxCKI pin
0 = Internal peripheral clock

bit 0 **Unimplemented:** Read as '0'

Note 1: When using 1:1 PBCmLK divisor, the user's software should not read/write the peripheral SFRs in the SYSCLK cycle immediately following the instruction that clears the module's ON bit.

© 2011-2016 Microchip Technology Inc.

13.0 TIMER2/3, TIMER4/5

Note: This data sheet summarizes the features of the PIC32MX1XX/2XX 28/36/44-pin Family of devices. It is not intended to be a comprehensive reference source. To complement the information in this data sheet, refer to **Section 14. "Timers"** (DS60001105), which is available from the *Documentation > Reference Manual* section of the Microchip PIC32 web site (www.microchip.com/pic32).

This family of PIC32 devices features four synchronous 16-bit timers (default) that can operate as a free-running interval timer for various timing applications and counting external events. The following modes are supported:

- Synchronous internal 16-bit timer
- Synchronous internal 16-bit gated timer
- Synchronous external 16-bit timer

Two 32-bit synchronous timers are available by combining Timer2 with Timer3 and Timer4 with Timer5. The 32-bit timers can operate in three modes:

- Synchronous internal 32-bit timer
- Synchronous internal 32-bit gated timer
- Synchronous external 32-bit timer

Note: In this chapter, references to registers, TxCON, TMRx and PRx, use 'x' to represent Timer2 through Timer5 in 16-bit modes. In 32-bit modes, 'x' represents Timer2 or Timer4 and 'y' represents Timer3 or Timer5.

13.1 Additional Supported Features

- Selectable clock prescaler
- Timers operational during CPU idle
- Time base for Input Capture and Output Compare modules (Timer2 and Timer3 only)
- ADC event trigger (Timer3 in 16-bit mode, Timer2/3 in 32-bit mode)
- Fast bit manipulation using CLR, SET and INV registers

Figure 13-1 and Figure 13-2 illustrate block diagrams of Timer2/3 and Timer4/5.

FIGURE 13-1: TIMER2-TIMER5 BLOCK DIAGRAM (16-BIT)

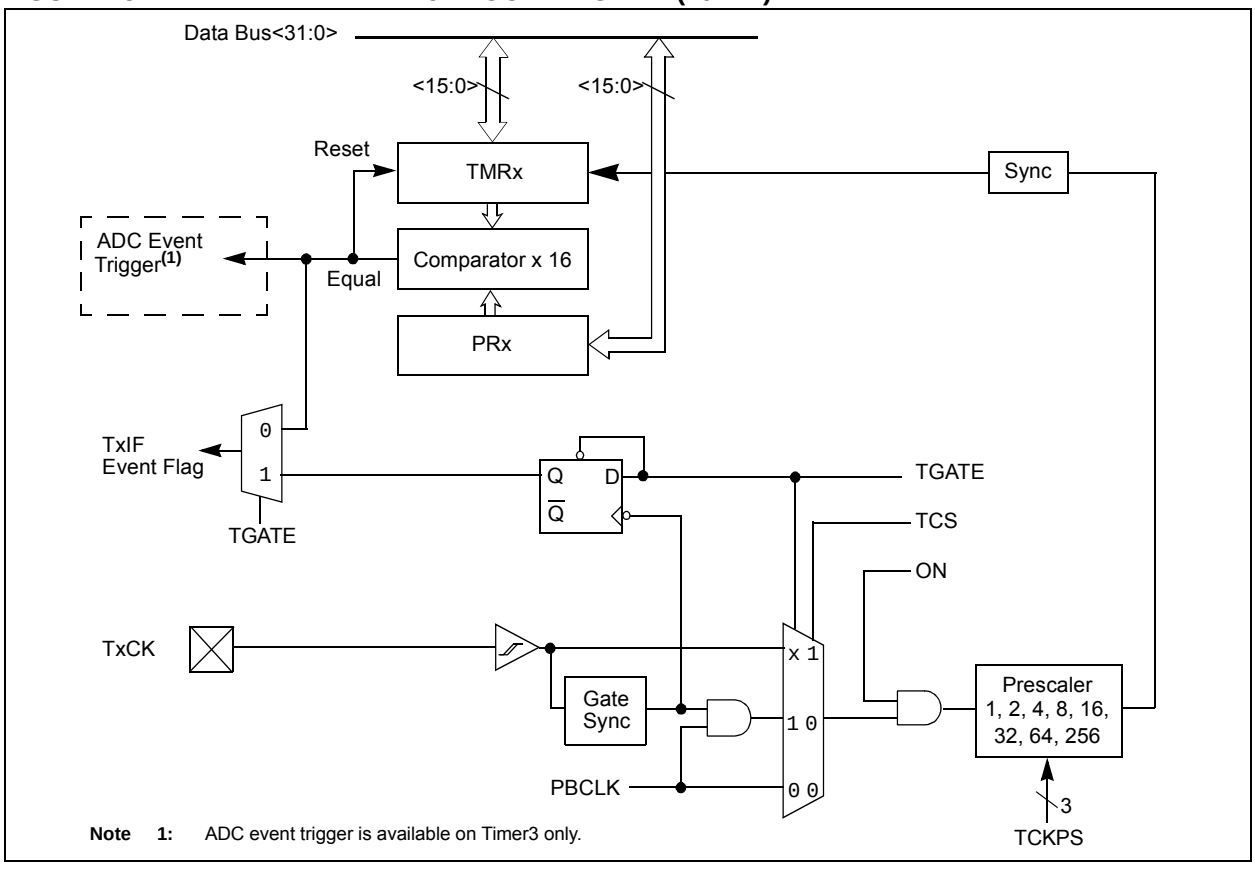

Note 1: ADC event trigger is available on Timer3 only.

FIGURE 13-2: TIMER2/3, TIMER4/5 BLOCK DIAGRAM (32-BIT)

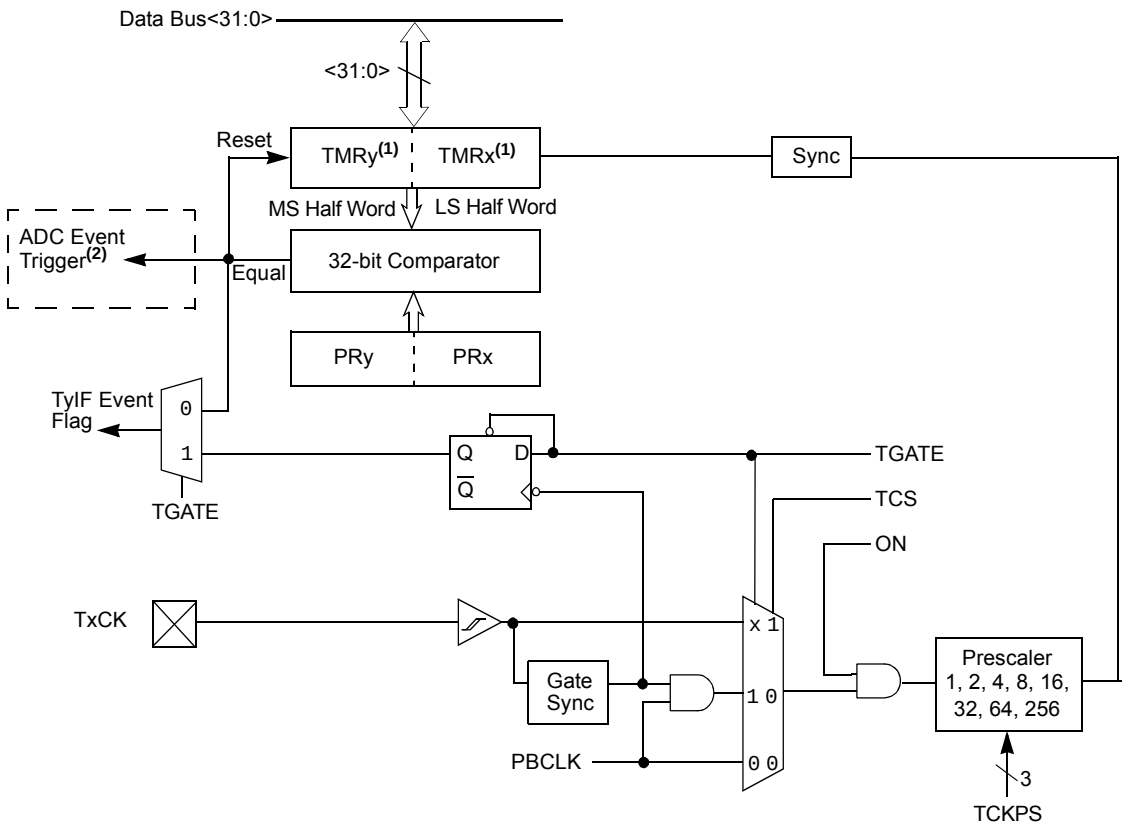

Note 1: In this diagram, the use of ‘x’ in registers, TxCON, TMRx, PRx and TxCK, refers to either Timer2 or Timer4; the use of ‘y’ in registers, TyCON, TMRy, PRy, TyIF, refers to either Timer3 or Timer5.

2: ADC event trigger is available only on the Timer2/3 pair.

© 2011-2016 Microchip Technology Inc.

13.2 Timer Control Registers

TABLE 13-1: TIMER2-TIMER5 REGISTER MAP

Virtual Address (BF80_#)	Register Name(1)	Bit Range	Bits 31/15	30/14	29/13	28/12	27/11	26/10	25/9	24/8	23/7	22/6	21/5	20/4	19/3	18/2	17/1	16/0	All Resets
0800	T2CON	31:16	—	—	—	—	—	—	—	—	—	—	—	—	—	—	—	—	0000
		15:0	ON	—	SIDL	—	—	—	—	—	TGATE	TCKPS<2:0>			T32	—	TCS	—	0000
0810	TMR2	31:16	—	—	—	—	—	—	—	—	—	—	—	—	—	—	—	—	0000
		15:0	TMR2<15:0>																0000
0820	PR2	31:16	—	—	—	—	—	—	—	—	—	—	—	—	—	—	—	—	0000
		15:0	PR2<15:0>																FFFF
0A00	T3CON	31:16	—	—	—	—	—	—	—	—	—	—	—	—	—	—	—	—	0000
		15:0	ON	—	SIDL	—	—	—	—	—	TGATE	TCKPS<2:0>			—	—	TCS	—	0000
0A10	TMR3	31:16	—	—	—	—	—	—	—	—	—	—	—	—	—	—	—	—	0000
		15:0	TMR3<15:0>																0000
0A20	PR3	31:16	—	—	—	—	—	—	—	—	—	—	—	—	—	—	—	—	0000
		15:0	PR3<15:0>																FFFF
0C00	T4CON	31:16	—	—	—	—	—	—	—	—	—	—	—	—	—	—	—	—	0000
		15:0	ON	—	SIDL	—	—	—	—	—	TGATE	TCKPS<2:0>			T32	—	TCS	—	0000
0C10	TMR4	31:16	—	—	—	—	—	—	—	—	—	—	—	—	—	—	—	—	0000
		15:0	TMR4<15:0>																0000
0C20	PR4	31:16	—	—	—	—	—	—	—	—	—	—	—	—	—	—	—	—	0000
		15:0	PR4<15:0>																FFFF
0E00	T5CON	31:16	—	—	—	—	—	—	—	—	—	—	—	—	—	—	—	—	0000
		15:0	ON	—	SIDL	—	—	—	—	—	TGATE	TCKPS<2:0>			—	—	TCS	—	0000
0E10	TMR5	31:16	—	—	—	—	—	—	—	—	—	—	—	—	—	—	—	—	0000
		15:0	TMR5<15:0>																0000
0E20	PR5	31:16	—	—	—	—	—	—	—	—	—	—	—	—	—	—	—	—	0000
		15:0	PR5<15:0>																FFFF

Legend: x = unknown value on Reset; — = unimplemented, read as ‘0’. Reset values are shown in hexadecimal.

Note 1: All registers in this table have corresponding CLR, SET and INV registers at their virtual addresses, plus offsets of 0x4, 0x8 and 0xC, respectively. See **Section 11.2 “CLR, SET and INV Registers”** for more information.

© 2011-2016 Microchip Technology Inc.

REGISTER 13-1: TXCON: TYPE B TIMER CONTROL REGISTER

Bit Range	Bit 31/23/15/7	Bit 30/22/14/6	Bit 29/21/13/5	Bit 28/20/12/4	Bit 27/19/11/3	Bit 26/18/10/2	Bit 25/17/9/1	Bit 24/16/8/0
31:24	U-0	U-0	U-0	U-0	U-0	U-0	U-0	U-0
	—	—	—	—	—	—	—	—
23:16	U-0	U-0	U-0	U-0	U-0	U-0	U-0	U-0
	—	—	—	—	—	—	—	—
15:8	R/W-0	U-0	R/W-0	U-0	U-0	U-0	U-0	U-0
	ON(1,3)	—	SIDL(4)	—	—	—	—	—
7:0	R/W-0	R/W-0	R/W-0	R/W-0	R/W-0	U-0	R/W-0	U-0
	TGATE(3)	TCKPS<2:0>(3)			T32(2)	—	TCS(3)	—

Legend:			
R = Readable bit	W = Writable bit	U = Unimplemented bit, read as ‘0’	
-n = Value at POR	‘1’ = Bit is set	‘0’ = Bit is cleared	x = Bit is unknown

bit 31-16 **Unimplemented:** Read as ‘0’

bit 15 **ON:** Timer On bit(1,3)
1 = Module is enabled
0 = Module is disabled

bit 14 **Unimplemented:** Read as ‘0’

bit 13 **SIDL:** Stop in Idle Mode bit(4)
1 = Discontinue module operation when the device enters Idle mode
0 = Continue module operation when the device enters Idle mode

bit 12-8 **Unimplemented:** Read as ‘0’

bit 7 **TGATE:** Timer Gated Time Accumulation Enable bit(3)
When TCS = 1:
This bit is ignored and is read as ‘0’.
When TCS = 0:
1 = Gated time accumulation is enabled
0 = Gated time accumulation is disabled

bit 6-4 **TCKPS<2:0>:** Timer Input Clock Prescale Select bits(3)
111 = 1:256 prescale value
110 = 1:64 prescale value
101 = 1:32 prescale value
100 = 1:16 prescale value
011 = 1:8 prescale value
010 = 1:4 prescale value
001 = 1:2 prescale value
000 = 1:1 prescale value

Note 1: When using 1:1 PBCLK divisor, the user’s software should not read/write the peripheral SFRs in the SYSCLK cycle immediately following the instruction that clears the module’s ON bit.

2: This bit is available only on even numbered timers (Timer2 and Timer4).

3: While operating in 32-bit mode, this bit has no effect for odd numbered timers (Timer3, and Timer5). All timer functions are set through the even numbered timers.

4: While operating in 32-bit mode, this bit must be cleared on odd numbered timers to enable the 32-bit timer in Idle mode.

© 2011-2016 Microchip Technology Inc.

REGISTER 13-1: TXCON: TYPE B TIMER CONTROL REGISTER (CONTINUED)

bit 3 **T32:** 32-Bit Timer Mode Select bit(2)
1 = Odd numbered and even numbered timers form a 32-bit timer
0 = Odd numbered and even numbered timers form a separate 16-bit timer

bit 2 **Unimplemented:** Read as '0'

bit 1 **TCS:** Timer Clock Source Select bit(3)
1 = External clock from TxCK pin
0 = Internal peripheral clock

bit 0 **Unimplemented:** Read as '0'

Note 1: When using 1:1 PBCLK divisor, the user's software should not read/write the peripheral SFRs in the SYSCLK cycle immediately following the instruction that clears the module's ON bit.

2: This bit is available only on even numbered timers (Timer2 and Timer4).

3: While operating in 32-bit mode, this bit has no effect for odd numbered timers (Timer3, and Timer5). All timer functions are set through the even numbered timers.

4: While operating in 32-bit mode, this bit must be cleared on odd numbered timers to enable the 32-bit timer in Idle mode.

NOTES:

© 2011-2016 Microchip Technology Inc.

14.0 WATCHDOG TIMER (WDT)

Note: This data sheet summarizes the features of the PIC32MX1XX/2XX 28/36/44-pin Family of devices. It is not intended to be a comprehensive reference source. To complement the information in this data sheet, refer to **Section 9. "Watchdog, Deadman, and Power-up Timers"** (DS60001114), which are available from the *Documentation > Reference Manual* section of the Microchip PIC32 web site (www.microchip.com/pic32).

The WDT, when enabled, operates from the internal Low-Power Oscillator (LPRC) clock source and can be used to detect system software malfunctions by resetting the device if the WDT is not cleared periodically in software. Various WDT time-out periods can be selected using the WDT postscaler. The WDT can also be used to wake the device from Sleep or Idle mode.

The following are some of the key features of the WDT module:

- Configuration or software controlled
- User-configurable time-out period
- Can wake the device from Sleep or Idle mode

Figure 14-1 illustrates a block diagram of the WDT and Power-up timer.

FIGURE 14-1: WATCHDOG TIMER AND POWER-UP TIMER BLOCK DIAGRAM

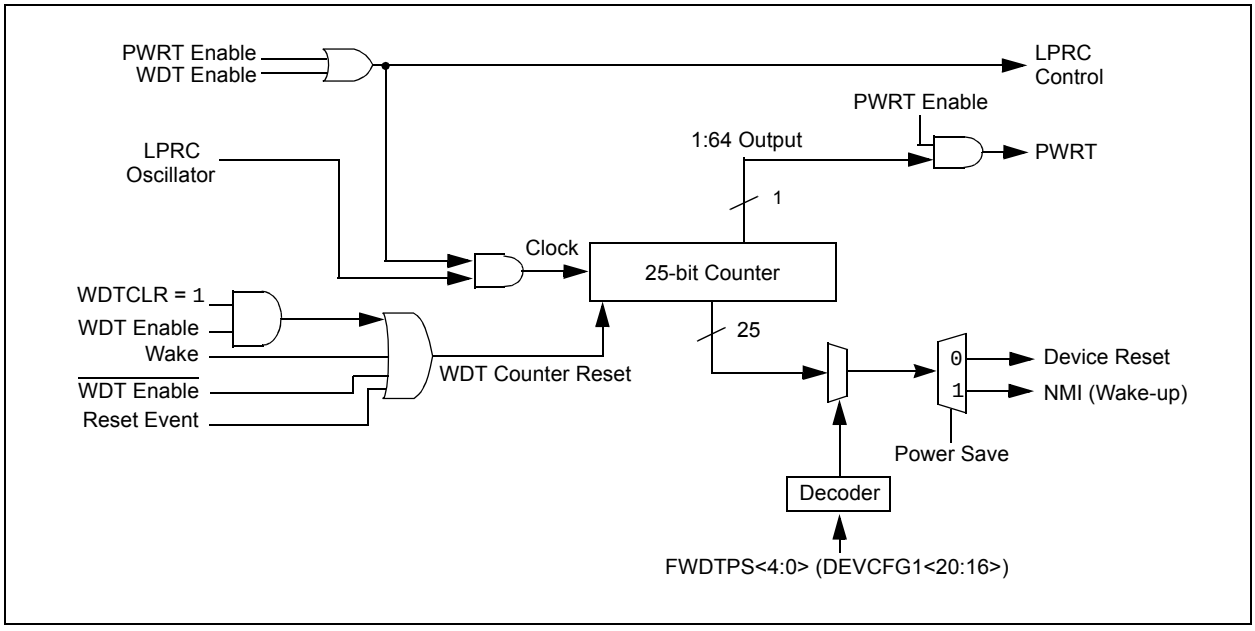

14.1 Watchdog Timer Control Registers

TABLE 14-1: WATCHDOG TIMER CONTROL REGISTER MAP

Virtual Address (BF80_#)	Register Name(1)	Bit Range	Bits																All Resets
			31/15	30/14	29/13	28/12	27/11	26/10	25/9	24/8	23/7	22/6	21/5	20/4	19/3	18/2	17/1	16/0	
0000	WDTCON	31:16	—	—	—	—	—	—	—	—	—	—	—	—	—	—	—	—	0000
		15:0	ON	—	—	—	—	—	—	—	—	SWDTPS<4:0>					WDTWINEN	WDTCLR	0000

Legend: x = unknown value on Reset; — = unimplemented, read as ‘0’. Reset values are shown in hexadecimal.

Note 1: All registers in this table have corresponding CLR, SET and INV registers at their virtual addresses, plus offsets of 0x4, 0x8 and 0xC, respectively. See **Section 11.2 “CLR, SET and INV Registers”** for more information.

© 2011-2016 Microchip Technology Inc.

REGISTER 14-1: WDTCON: WATCHDOG TIMER CONTROL REGISTER

Bit Range	Bit 31/23/15/7	Bit 30/22/14/6	Bit 29/21/13/5	Bit 28/20/12/4	Bit 27/19/11/3	Bit 26/18/10/2	Bit 25/17/9/1	Bit 24/16/8/0
31:24	U-0	U-0	U-0	U-0	U-0	U-0	U-0	U-0
	—	—	—	—	—	—	—	—
23:16	U-0	U-0	U-0	U-0	U-0	U-0	U-0	U-0
	—	—	—	—	—	—	—	—
15:8	R/W-0	U-0	U-0	U-0	U-0	U-0	U-0	U-0
	ON(1,2)	—	—	—	—	—	—	—
7:0	U-0	R-y	R-y	R-y	R-y	R-y	R/W-0	R/W-0
	—	SWDTPS<4:0>					WDTWINEN	WDTCLR

Legend:	y = Values set from Configuration bits on POR		
R = Readable bit	W = Writable bit	U = Unimplemented bit, read as ‘0’	
-n = Value at POR	‘1’ = Bit is set	‘0’ = Bit is cleared	x = Bit is unknown

bit 31-16 **Unimplemented:** Read as ‘0’

bit 15 **ON:** Watchdog Timer Enable bit(1,2)
1 = Enables the WDT if it is not enabled by the device configuration
0 = Disable the WDT if it was enabled in software

bit 14-7 **Unimplemented:** Read as ‘0’

bit 6-2 **SWDTPS<4:0>:** Shadow Copy of Watchdog Timer Postscaler Value from Device Configuration bits
On reset, these bits are set to the values of the WDTPS <4:0> of Configuration bits.

bit 1 **WDTWINEN:** Watchdog Timer Window Enable bit
1 = Enable windowed Watchdog Timer
0 = Disable windowed Watchdog Timer

bit 0 **WDTCLR:** Watchdog Timer Reset bit
1 = Writing a ‘1’ will clear the WDT
0 = Software cannot force this bit to a ‘0’

Note 1: A read of this bit results in a ‘1’ if the Watchdog Timer is enabled by the device configuration or software.

2: When using the 1:1 PBCLK divisor, the user’s software should not read or write the peripheral’s SFRs in the SYSCLK cycle immediately following the instruction that clears the module’s ON bit.

NOTES:

© 2011-2016 Microchip Technology Inc.

15.0 INPUT CAPTURE

Note: This data sheet summarizes the features of the PIC32MX1XX/2XX 28/36/44-pin Family of devices. It is not intended to be a comprehensive reference source. To complement the information in this data sheet, refer to **Section 15. "Input Capture"** (DS60001122), which is available from the *Documentation > Reference Manual* section of the Microchip PIC32 web site (www.microchip.com/pic32).

The Input Capture module is useful in applications requiring frequency (period) and pulse measurement.

The Input Capture module captures the 16-bit or 32-bit value of the selected Time Base registers when an event occurs at the ICx pin. The following events cause capture events:

- Simple capture event modes:
  - Capture timer value on every rising and falling edge of input at ICx pin
  - Capture timer value on every edge (rising and falling)
  - Capture timer value on every edge (rising and falling), specified edge first.
- Prescaler capture event modes:
  - Capture timer value on every 4th rising edge of input at ICx pin
  - Capture timer value on every 16th rising edge of input at ICx pin

Each input capture channel can select between one of two 16-bit timers (Timer2 or Timer3) for the time base, or two 16-bit timers (Timer2 and Timer3) together to form a 32-bit timer. The selected timer can use either an internal or external clock.

Other operational features include:

- Device wake-up from capture pin during Sleep and Idle modes
- Interrupt on input capture event
- 4-word FIFO buffer for capture values (interrupt optionally generated after 1, 2, 3, or 4 buffer locations are filled)
- Input capture can also be used to provide additional sources of external interrupts

Figure 15-1 illustrates a general block diagram of the Input Capture module.

FIGURE 15-1: INPUT CAPTURE BLOCK DIAGRAM

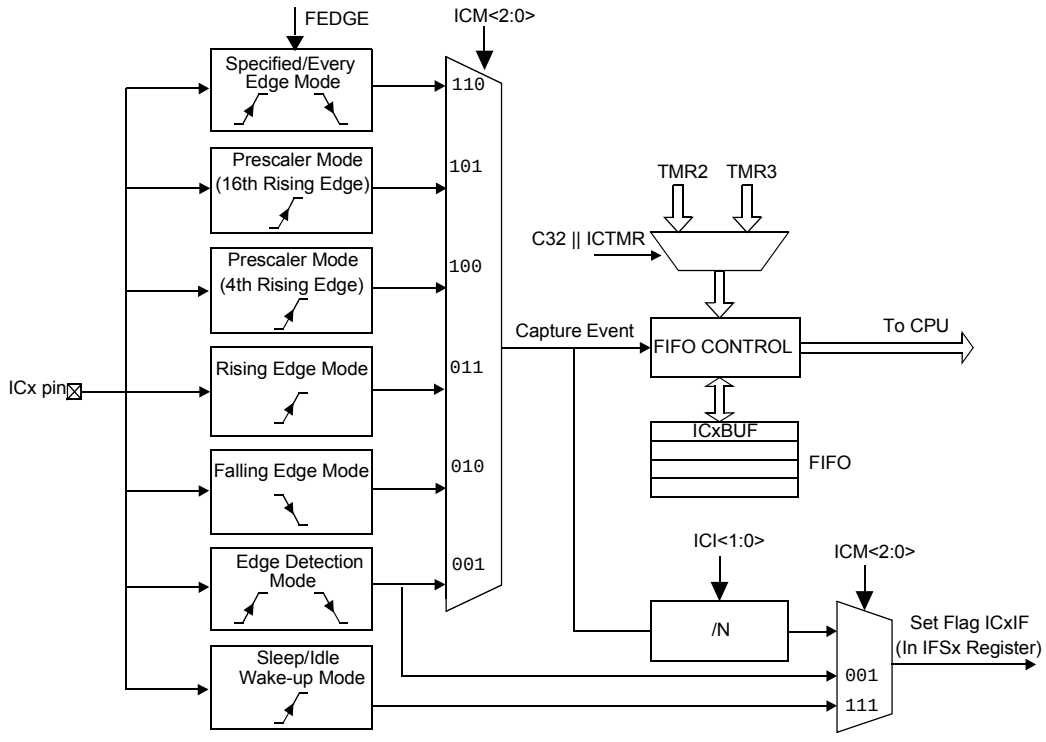

Note: An 'x' in a signal, register or bit name denotes the number of the capture channel.

15.1 Input Capture Control Registers

TABLE 15-1: INPUT CAPTURE 1-INPUT CAPTURE 5 REGISTER MAP

Virtual Address (BF80_#)	Register Name	Bit Range	Bits																All Resets
			31/15	30/14	29/13	28/12	27/11	26/10	25/9	24/8	23/7	22/6	21/5	20/4	19/3	18/2	17/1	16/0	
2000	IC1CON(1)	31:16	—	—	—	—	—	—	—	—	—	—	—	—	—	—	—	—	0000
		15:0	ON	—	SIDL	—	—	—	FEDGE	C32	ICTMR	ICI<1:0>		ICOV	ICBNE	ICM<2:0>			0000
2010	IC1BUF	31:16	IC1BUF<31:0>																xxxx
		15:0																	xxxx
2200	IC2CON(1)	31:16	—	—	—	—	—	—	—	—	—	—	—	—	—	—	—	—	0000
		15:0	ON	—	SIDL	—	—	—	FEDGE	C32	ICTMR	ICI<1:0>		ICOV	ICBNE	ICM<2:0>			0000
2210	IC2BUF	31:16	IC2BUF<31:0>																xxxx
		15:0																	xxxx
2400	IC3CON(1)	31:16	—	—	—	—	—	—	—	—	—	—	—	—	—	—	—	—	0000
		15:0	ON	—	SIDL	—	—	—	FEDGE	C32	ICTMR	ICI<1:0>		ICOV	ICBNE	ICM<2:0>			0000
2410	IC3BUF	31:16	IC3BUF<31:0>																xxxx
		15:0																	xxxx
2600	IC4CON(1)	31:16	—	—	—	—	—	—	—	—	—	—	—	—	—	—	—	—	0000
		15:0	ON	—	SIDL	—	—	—	FEDGE	C32	ICTMR	ICI<1:0>		ICOV	ICBNE	ICM<2:0>			0000
2610	IC4BUF	31:16	IC4BUF<31:0>																xxxx
		15:0																	xxxx
2800	IC5CON(1)	31:16	—	—	—	—	—	—	—	—	—	—	—	—	—	—	—	—	0000
		15:0	ON	—	SIDL	—	—	—	FEDGE	C32	ICTMR	ICI<1:0>		ICOV	ICBNE	ICM<2:0>			0000
2810	IC5BUF	31:16	IC5BUF<31:0>																xxxx
		15:0																	xxxx

Legend: x = unknown value on Reset; — = unimplemented, read as ‘0’. Reset values are shown in hexadecimal.

Note 1: This register has corresponding CLR, SET and INV registers at its virtual address, plus an offset of 0x4, 0x8 and 0xC, respectively. See **Section 11.2 “CLR, SET and INV Registers”** for more information.

© 2011-2016 Microchip Technology Inc.

REGISTER 15-1: ICxCON: INPUT CAPTURE 'x' CONTROL REGISTER

Bit Range	Bit 31/23/15/7	Bit 30/22/14/6	Bit 29/21/13/5	Bit 28/20/12/4	Bit 27/19/11/3	Bit 26/18/10/2	Bit 25/17/9/1	Bit 24/16/8/0
31:24	U-0	U-0	U-0	U-0	U-0	U-0	U-0	U-0
	—	—	—	—	—	—	—	—
23:16	U-0	U-0	U-0	U-0	U-0	U-0	U-0	U-0
	—	—	—	—	—	—	—	—
15:8	R/W-0	U-0	R/W-0	U-0	U-0	U-0	R/W-0	R/W-0
	ON(1)	—	SIDL	—	—	—	FEDGE	C32
7:0	R/W-0	R/W-0	R/W-0	R-0	R-0	R/W-0	R/W-0	R/W-0
	ICTMR	ICI<1:0>		ICOV	ICBNE	ICM<2:0>		

Legend:			
R = Readable bit	W = Writable bit	U = Unimplemented bit	
-n = Bit Value at POR: ('0', '1', x = unknown)		P = Programmable bit	r = Reserved bit

bit 31-16 **Unimplemented:** Read as '0'

bit 15 **ON:** Input Capture Module Enable bit(1)
1 = Module is enabled
0 = Disable and reset module, disable clocks, disable interrupt generation and allow SFR modifications

bit 14 **Unimplemented:** Read as '0'

bit 13 **SIDL:** Stop in Idle Control bit
1 = Halt in Idle mode
0 = Continue to operate in Idle mode

bit 12-10 **Unimplemented:** Read as '0'

bit 9 **FEDGE:** First Capture Edge Select bit (only used in mode 6, ICM<2:0> = 110)
1 = Capture rising edge first
0 = Capture falling edge first

bit 8 **C32:** 32-bit Capture Select bit
1 = 32-bit timer resource capture
0 = 16-bit timer resource capture

bit 7 **ICTMR:** Timer Select bit (Does not affect timer selection when C32 (ICxCON<8>) is '1')
0 = Timer3 is the counter source for capture
1 = Timer2 is the counter source for capture

bit 6-5 **ICI<1:0>:** Interrupt Control bits
11 = Interrupt on every fourth capture event
10 = Interrupt on every third capture event
01 = Interrupt on every second capture event
00 = Interrupt on every capture event

bit 4 **ICOV:** Input Capture Overflow Status Flag bit (read-only)
1 = Input capture overflow has occurred
0 = No input capture overflow has occurred

bit 3 **ICBNE:** Input Capture Buffer Not Empty Status bit (read-only)
1 = Input capture buffer is not empty; at least one more capture value can be read
0 = Input capture buffer is empty

Note 1: When using 1:1 PBCLK divisor, the user's software should not read/write the peripheral's SFRs in the SYSCLK cycle immediately following the instruction that clears the module's ON bit.

REGISTER 15-1: ICxCON: INPUT CAPTURE 'x' CONTROL REGISTER (CONTINUED)

bit 2-0 **ICM<2:0>:** Input Capture Mode Select bits

111 = Interrupt-Only mode (only supported while in Sleep mode or Idle mode)
110 = Simple Capture Event mode – every edge, specified edge first and every edge thereafter
101 = Prescaled Capture Event mode – every sixteenth rising edge
100 = Prescaled Capture Event mode – every fourth rising edge
011 = Simple Capture Event mode – every rising edge
010 = Simple Capture Event mode – every falling edge
001 = Edge Detect mode – every edge (rising and falling)
000 = Input Capture module is disabled

Note 1: When using 1:1 PBCLK divisor, the user's software should not read/write the peripheral's SFRs in the SYSCLK cycle immediately following the instruction that clears the module's ON bit.

© 2011-2016 Microchip Technology Inc.

16.0 OUTPUT COMPARE

Note: This data sheet summarizes the features of the PIC32MX1XX/2XX 28/36/44-pin Family of devices. It is not intended to be a comprehensive reference source. To complement the information in this data sheet, refer to **Section 16. "Output Compare"** (DS60001111), which is available from the *Documentation > Reference Manual* section of the Microchip PIC32 web site (www.microchip.com/pic32).

The Output Compare module is used to generate a single pulse or a train of pulses in response to selected time base events. For all modes of operation, the Output Compare module compares the values stored in the OCxR and/or the OCxRS registers to the value in the selected timer. When a match occurs, the Output Compare module generates an event based on the selected mode of operation.

The following are some of the key features:

- Multiple Output Compare Modules in a device
- Programmable interrupt generation on compare event
- Single and Dual Compare modes
- Single and continuous output pulse generation
- Pulse-Width Modulation (PWM) mode
- Hardware-based PWM Fault detection and automatic output disable
- Can operate from either of two available 16-bit time bases or a single 32-bit time base

FIGURE 16-1: OUTPUT COMPARE MODULE BLOCK DIAGRAM

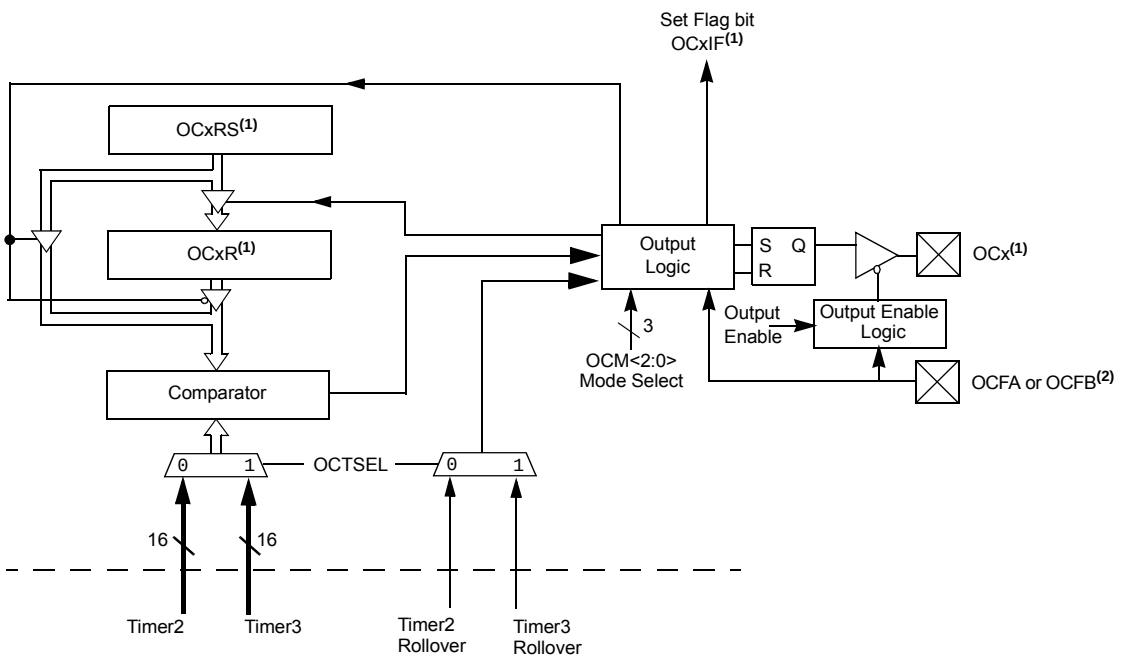

Note 1: Where 'x' is shown, reference is made to the registers associated with the respective output compare channels, 1 through 5.

2: The OCFA pin controls the OC1-OC4 channels. The OCFB pin controls the OC5 channel.

16.1 Output Compare Control Registers

TABLE 16-1: OUTPUT COMPARE 1-OUTPUT COMPARE 5 REGISTER MAP

Virtual Address (BF80_#)	Register Name(1)	Bit Range	Bits 31/15	30/14	29/13	28/12	27/11	26/10	25/9	24/8	23/7	22/6	21/5	20/4	19/3	18/2	17/1	16/0	All Resets
3000	OC1CON	31:16	—	—	—	—	—	—	—	—	—	—	—	—	—	—	—	—	0000
		15:0	ON	—	SIDL	—	—	—	—	—	—	—	OC32	OCFLT	OCTSEL	OCM<2:0>			0000
3010	OC1R	31:16	OC1R<31:0>																xxxx
		15:0																	xxxx
3020	OC1RS	31:16	OC1RS<31:0>																xxxx
		15:0																	xxxx
3200	OC2CON	31:16	—	—	—	—	—	—	—	—	—	—	—	—	—	—	—	—	0000
		15:0	ON	—	SIDL	—	—	—	—	—	—	—	OC32	OCFLT	OCTSEL	OCM<2:0>			0000
3210	OC2R	31:16	OC2R<31:0>																xxxx
		15:0																	xxxx
3220	OC2RS	31:16	OC2RS<31:0>																xxxx
		15:0																	xxxx
3400	OC3CON	31:16	—	—	—	—	—	—	—	—	—	—	—	—	—	—	—	—	0000
		15:0	ON	—	SIDL	—	—	—	—	—	—	—	OC32	OCFLT	OCTSEL	OCM<2:0>			0000
3410	OC3R	31:16	OC3R<31:0>																xxxx
		15:0																	xxxx
3420	OC3RS	31:16	OC3RS<31:0>																xxxx
		15:0																	xxxx
3600	OC4CON	31:16	—	—	—	—	—	—	—	—	—	—	—	—	—	—	—	—	0000
		15:0	ON	—	SIDL	—	—	—	—	—	—	—	OC32	OCFLT	OCTSEL	OCM<2:0>			0000
3610	OC4R	31:16	OC4R<31:0>																xxxx
		15:0																	xxxx
3620	OC4RS	31:16	OC4RS<31:0>																xxxx
		15:0																	xxxx
3800	OC5CON	31:16	—	—	—	—	—	—	—	—	—	—	—	—	—	—	—	—	0000
		15:0	ON	—	SIDL	—	—	—	—	—	—	—	OC32	OCFLT	OCTSEL	OCM<2:0>			0000
3810	OC5R	31:16	OC5R<31:0>																xxxx
		15:0																	xxxx
3820	OC5RS	31:16	OC5RS<31:0>																xxxx
		15:0																	xxxx

Legend: x = unknown value on Reset; — = unimplemented, read as '0'. Reset values are shown in hexadecimal.

Note 1: All registers in this table have corresponding CLR, SET and INV registers at their virtual addresses, plus offsets of 0x4, 0x8 and 0xC, respectively. See **Section 11.2 "CLR, SET and INV Registers"** for more information.

© 2011-2016 Microchip Technology Inc.

REGISTER 16-1: OCxCON: OUTPUT COMPARE 'x' CONTROL REGISTER

Bit Range	Bit 31/23/15/7	Bit 30/22/14/6	Bit 29/21/13/5	Bit 28/20/12/4	Bit 27/19/11/3	Bit 26/18/10/2	Bit 25/17/9/1	Bit 24/16/8/0
31:24	U-0	U-0	U-0	U-0	U-0	U-0	U-0	U-0
	—	—	—	—	—	—	—	—
23:16	U-0	U-0	U-0	U-0	U-0	U-0	U-0	U-0
	—	—	—	—	—	—	—	—
15:8	R/W-0	U-0	R/W-0	U-0	U-0	U-0	U-0	U-0
	ON(1)	—	SIDL	—	—	—	—	—
7:0	U-0	U-0	R/W-0	R-0	R/W-0	R/W-0	R/W-0	R/W-0
	—	—	OC32	OCFLT(2)	OCTSEL	OCM<2:0>		

Legend:			
R = Readable bit	W = Writable bit	U = Unimplemented bit, read as '0'	
-n = Value at POR	'1' = Bit is set	'0' = Bit is cleared	x = Bit is unknown

bit 31-16 **Unimplemented:** Read as '0'

bit 15 **ON:** Output Compare Peripheral On bit(1)
- 1 = Output Compare peripheral is enabled
- 0 = Output Compare peripheral is disabled

bit 14 **Unimplemented:** Read as '0'

bit 13 **SIDL:** Stop in Idle Mode bit
- 1 = Discontinue module operation when the device enters Idle mode
- 0 = Continue module operation when the device enters Idle mode

bit 12-6 **Unimplemented:** Read as '0'

bit 5 **OC32:** 32-bit Compare Mode bit
- 1 = OCxR<31:0> and/or OCxRS<31:0> are used for comparisons to the 32-bit timer source
- 0 = OCxR<15:0> and OCxRS<15:0> are used for comparisons to the 16-bit timer source

bit 4 **OCFLT:** PWM Fault Condition Status bit(2)
- 1 = PWM Fault condition has occurred (cleared in hardware only)
- 0 = No PWM Fault condition has occurred

bit 3 **OCTSEL:** Output Compare Timer Select bit
- 1 = Timer3 is the clock source for this Output Compare module
- 0 = Timer2 is the clock source for this Output Compare module

bit 2-0 **OCM<2:0>:** Output Compare Mode Select bits
- 111 = PWM mode on OCx; Fault pin enabled
- 110 = PWM mode on OCx; Fault pin disabled
- 101 = Initialize OCx pin low; generate continuous output pulses on OCx pin
- 100 = Initialize OCx pin low; generate single output pulse on OCx pin
- 011 = Compare event toggles OCx pin
- 010 = Initialize OCx pin high; compare event forces OCx pin low
- 001 = Initialize OCx pin low; compare event forces OCx pin high
- 000 = Output compare peripheral is disabled but continues to draw current

Note 1: When using 1:1 PBCLK divisor, the user's software should not read/write the peripheral's SFRs in the SYSCLK cycle immediately following the instruction that clears the module's ON bit.

2: This bit is only used when OCM<2:0> = '111'. It is read as '0' in all other modes.

NOTES:

© 2011-2016 Microchip Technology Inc.

17.0 SERIAL PERIPHERAL INTERFACE (SPI)

Note: This data sheet summarizes the features of the PIC32MX1XX/2XX 28/36/44-pin Family of devices. It is not intended to be a comprehensive reference source. To complement the information in this data sheet, refer to **Section 23. "Serial Peripheral Interface (SPI)"** (DS60001106), which is available from the *Documentation > Reference Manual* section of the Microchip PIC32 web site (www.microchip.com/pic32).

The SPI module is a synchronous serial interface that is useful for communicating with external peripherals and other microcontrollers. These peripheral devices may be Serial EEPROMs, Shift registers, display drivers, Analog-to-Digital Converters (ADC), etc. The PIC32 SPI module is compatible with Motorola® SPI and SIOP interfaces.

Some of the key features of the SPI module are:

- Master mode and Slave mode support
- Four clock formats
- Enhanced Framed SPI protocol support
- User-configurable 8-bit, 16-bit and 32-bit data width
- Separate SPI FIFO buffers for receive and transmit
  - FIFO buffers act as 4/8/16-level deep FIFOs based on 32/16/8-bit data width
- Programmable interrupt event on every 8-bit, 16-bit and 32-bit data transfer
- Operation during Sleep and Idle modes
- Audio Codec Support:
  - I^2S protocol
  - Left-justified
  - Right-justified
  - PCM

FIGURE 17-1: SPI MODULE BLOCK DIAGRAM

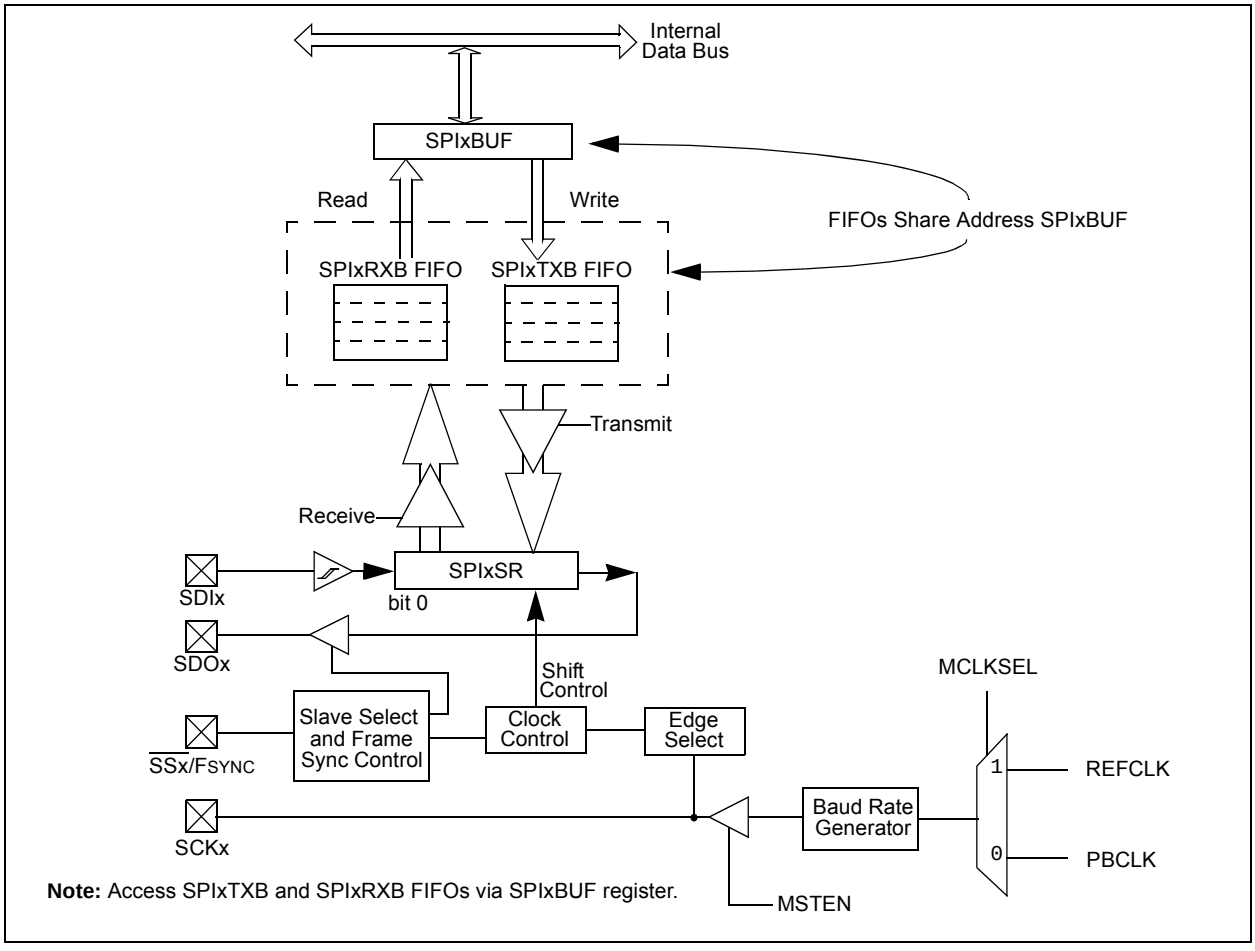

17.1 SPI Control Registers

TABLE 17-1: SPI1 AND SPI2 REGISTER MAP

Virtual Address (BF80_#)	Register Name(1)	Bit Range	Bits 31/15	30/14	29/13	28/12	27/11	26/10	25/9	24/8	23/7	22/6	21/5	20/4	19/3	18/2	17/1	16/0	All Resets
5800	SPI1CON	31:16	FRMEN	FRMSYNC	FRMPOL	MSSEN	FRMSYPW	FRMCNT<2:0>			MCLKSEL	—	—	—	—	—	SPIFE	ENHBUF	0000
		15:0	ON	—	SIDL	DISSDO	MODE32	MODE16	SMP	CKE	SSEN	CKP	MSTEN	DISSDI	STXISEL<1:0>		SRXISEL<1:0>		0000
5810	SPI1STAT	31:16	—	—	—	RXBUFELM<4:0>					—	—	—	TXBUFELM<4:0>					0000
		15:0	—	—	—	FRMERR	SPIBUSY	—	—	SPITUR	SRMT	SPIROV	SPIRBE	—	SPITBE	—	SPITBF	SPIRBF	0008
5820	SPI1BUF	31:16	DATA<31:0>																0000
		15:0																	0000
5830	SPI1BRG	31:16	—	—	—	—	—	—	—	—	—	—	—	—	—	—	—	—	0000
		15:0	—	—	—	BRG<12:0>													0000
5840	SPI1CON2	31:16	—	—	—	—	—	—	—	—	—	—	—	—	—	—	—	—	0000
		15:0	SPI SGNEXT	—	—	FRM ERREN	SPI ROVEN	SPI TUREN	IGNROV	IGNTUR	AUDEN	—	—	—	AUD MONO	—	AUDMOD<1:0>		0000
5A00	SPI2CON	31:16	FRMEN	FRMSYNC	FRMPOL	MSSEN	FRMSYPW	FRMCNT<2:0>			MCLKSEL	—	—	—	—	—	SPIFE	ENHBUF	0000
		15:0	ON	—	SIDL	DISSDO	MODE32	MODE16	SMP	CKE	SSEN	CKP	MSTEN	DISSDI	STXISEL<1:0>		SRXISEL<1:0>		0000
5A10	SPI2STAT	31:16	—	—	—	RXBUFELM<4:0>					—	—	—	TXBUFELM<4:0>					0000
		15:0	—	—	—	FRMERR	SPIBUSY	—	—	SPITUR	SRMT	SPIROV	SPIRBE	—	SPITBE	—	SPITBF	SPIRBF	0008
5A20	SPI2BUF	31:16	DATA<31:0>																0000
		15:0																	0000
5A30	SPI2BRG	31:16	—	—	—	—	—	—	—	—	—	—	—	—	—	—	—	—	0000
		15:0	—	—	—	BRG<12:0>													0000
5A40	SPI2CON2	31:16	—	—	—	—	—	—	—	—	—	—	—	—	—	—	—	—	0000
		15:0	SPI SGNEXT	—	—	FRM ERREN	SPI ROVEN	SPI TUREN	IGNROV	IGNTUR	AUDEN	—	—	—	AUD MONO	—	AUDMOD<1:0>		0000

Legend: x = unknown value on Reset; — = unimplemented, read as ‘0’. Reset values are shown in hexadecimal.

Note 1: All registers in this table except SPIxBUF have corresponding CLR, SET and INV registers at their virtual addresses, plus offsets of 0x4, 0x8 and 0xC, respectively. See **Section 11.2 “CLR, SET and INV Registers”** for more information.

© 2011-2016 Microchip Technology Inc.

REGISTER 17-1: SPIxCON: SPI CONTROL REGISTER

Bit Range	Bit 31/23/15/7	Bit 30/22/14/6	Bit 29/21/13/5	Bit 28/20/12/4	Bit 27/19/11/3	Bit 26/18/10/2	Bit 25/17/9/1	Bit 24/16/8/0
31:24	R/W-0	R/W-0	R/W-0	R/W-0	R/W-0	R/W-0	R/W-0	R/W-0
	FRMEN	FRMSYNC	FRMPOL	MSSEN	FRMSYPW	FRMCNT<2:0>		
23:16	R/W-0	U-0	U-0	U-0	U-0	U-0	R/W-0	R/W-0
	MCLKSEL(2)	—	—	—	—	—	SPIFE	ENHBUF(2)
15:8	R/W-0	U-0	R/W-0	R/W-0	R/W-0	R/W-0	R/W-0	R/W-0
	ON(1)	—	SIDL	DISSDO	MODE32	MODE16	SMP	CKE(3)
7:0	R/W-0	R/W-0	R/W-0	R/W-0	R/W-0	R/W-0	R/W-0	R/W-0
	SSEN	CKP(4)	MSTEN	DISSDI	STXISEL<1:0>		SRXISEL<1:0>	

Legend:			
R = Readable bit	W = Writable bit	U = Unimplemented bit, read as ‘0’	
-n = Value at POR	‘1’ = Bit is set	‘0’ = Bit is cleared	x = Bit is unknown

bit 31 **FRMEN:** Framed SPI Support bit
1 = Framed SPI support is enabled ($\overline{SSx}$ pin used as FSYNC input/output)
0 = Framed SPI support is disabled

bit 30 **FRMSYNC:** Frame Sync Pulse Direction Control on $\overline{SSx}$ pin bit (Framed SPI mode only)
1 = Frame sync pulse input (Slave mode)
0 = Frame sync pulse output (Master mode)

bit 29 **FRMPOL:** Frame Sync Polarity bit (Framed SPI mode only)
1 = Frame pulse is active-high
0 = Frame pulse is active-low

bit 28 **MSSEN:** Master Mode Slave Select Enable bit
1 = Slave select SPI support enabled. The $\overline{SS}$ pin is automatically driven during transmission in Master mode. Polarity is determined by the FRMPOL bit.
0 = Slave select SPI support is disabled.

bit 27 **FRMSYPW:** Frame Sync Pulse Width bit
1 = Frame sync pulse is one character wide
0 = Frame sync pulse is one clock wide

bit 26-24 **FRMCNT<2:0>:** Frame Sync Pulse Counter bits. Controls the number of data characters transmitted per pulse. This bit is only valid in FRAMED_SYNC mode.
111 = Reserved; do not use
110 = Reserved; do not use
101 = Generate a frame sync pulse on every 32 data characters
100 = Generate a frame sync pulse on every 16 data characters
011 = Generate a frame sync pulse on every 8 data characters
010 = Generate a frame sync pulse on every 4 data characters
001 = Generate a frame sync pulse on every 2 data characters
000 = Generate a frame sync pulse on every data character

bit 23 **MCLKSEL:** Master Clock Enable bit(2)
1 = REFCLK is used by the Baud Rate Generator
0 = PBCLK is used by the Baud Rate Generator

bit 22-18 **Unimplemented:** Read as ‘0’

Note 1: When using the 1:1 PBCLK divisor, the user’s software should not read or write the peripheral’s SFRs in the SYSCLK cycle immediately following the instruction that clears the module’s ON bit.

2: This bit can only be written when the ON bit = 0.

3: This bit is not used in the Framed SPI mode. The user should program this bit to ‘0’ for the Framed SPI mode (FRMEN = 1).

4: When AUDEN = 1, the SPI module functions as if the CKP bit is equal to ‘1’, regardless of the actual value of CKP.

REGISTER 17-1: SPIxCON: SPI CONTROL REGISTER (CONTINUED)

bit 17 **SPIFE:** Frame Sync Pulse Edge Select bit (Framed SPI mode only)
1 = Frame synchronization pulse coincides with the first bit clock
0 = Frame synchronization pulse precedes the first bit clock

bit 16 **ENHBUF:** Enhanced Buffer Enable bit(2)
1 = Enhanced Buffer mode is enabled
0 = Enhanced Buffer mode is disabled

bit 15 **ON:** SPI Peripheral On bit(1)
1 = SPI Peripheral is enabled
0 = SPI Peripheral is disabled

bit 14 **Unimplemented:** Read as '0'

bit 13 **SIDL:** Stop in Idle Mode bit
1 = Discontinue module operation when the device enters Idle mode
0 = Continue module operation when the device enters Idle mode

bit 12 **DISSDO:** Disable SDOx pin bit
1 = SDOx pin is not used by the module. Pin is controlled by associated PORT register
0 = SDOx pin is controlled by the module

bit 11-10 **MODE<32,16>:** 32/16-Bit Communication Select bits

When AUDEN = 1:

MODE32	MODE16	Communication
1	1	24-bit Data, 32-bit FIFO, 32-bit Channel/64-bit Frame
1	0	32-bit Data, 32-bit FIFO, 32-bit Channel/64-bit Frame
0	1	16-bit Data, 16-bit FIFO, 32-bit Channel/64-bit Frame
0	0	16-bit Data, 16-bit FIFO, 16-bit Channel/32-bit Frame

When AUDEN = 0:

MODE32	MODE16	Communication
1	x	32-bit
0	1	16-bit
0	0	8-bit

bit 9 **SMP:** SPI Data Input Sample Phase bit
Master mode (MSTEN = 1):
1 = Input data sampled at end of data output time
0 = Input data sampled at middle of data output time
Slave mode (MSTEN = 0):
SMP value is ignored when SPI is used in Slave mode. The module always uses SMP = 0.

To write a '1' to this bit, the MSTEN value = 1 must first be written.

bit 8 **CKE:** SPI Clock Edge Select bit(3)
1 = Serial output data changes on transition from active clock state to Idle clock state (see the CKP bit)
0 = Serial output data changes on transition from Idle clock state to active clock state (see the CKP bit)

bit 7 **SSEN:** Slave Select Enable (Slave mode) bit
1 = $\overline{SSx}$ pin used for Slave mode
0 = $\overline{SSx}$ pin not used for Slave mode, pin controlled by port function.

bit 6 **CKP:** Clock Polarity Select bit(4)
1 = Idle state for clock is a high level; active state is a low level
0 = Idle state for clock is a low level; active state is a high level

Note 1: When using the 1:1 PBCLK divisor, the user's software should not read or write the peripheral's SFRs in the SYSCLK cycle immediately following the instruction that clears the module's ON bit.

2: This bit can only be written when the ON bit = 0.

3: This bit is not used in the Framed SPI mode. The user should program this bit to '0' for the Framed SPI mode (FRMEN = 1).

4: When AUDEN = 1, the SPI module functions as if the CKP bit is equal to '1', regardless of the actual value of CKP.

© 2011-2016 Microchip Technology Inc.

REGISTER 17-1: SPIxCON: SPI CONTROL REGISTER (CONTINUED)

bit 5 **MSTEN:** Master Mode Enable bit
1 = Master mode
0 = Slave mode

bit 4 **DISSDI:** Disable SDI bit
1 = SDI pin is not used by the SPI module (pin is controlled by PORT function)
0 = SDI pin is controlled by the SPI module

bit 3-2 **STXISEL<1:0>:** SPI Transmit Buffer Empty Interrupt Mode bits
11 = Interrupt is generated when the buffer is not full (has one or more empty elements)
10 = Interrupt is generated when the buffer is empty by one-half or more
01 = Interrupt is generated when the buffer is completely empty
00 = Interrupt is generated when the last transfer is shifted out of SPISR and transmit operations are complete

bit 1-0 **SRXISEL<1:0>:** SPI Receive Buffer Full Interrupt Mode bits
11 = Interrupt is generated when the buffer is full
10 = Interrupt is generated when the buffer is full by one-half or more
01 = Interrupt is generated when the buffer is not empty
00 = Interrupt is generated when the last word in the receive buffer is read (i.e., buffer is empty)

Note 1: When using the 1:1 PBCLK divisor, the user's software should not read or write the peripheral's SFRs in the SYSCLK cycle immediately following the instruction that clears the module's ON bit.

2: This bit can only be written when the ON bit = 0.

3: This bit is not used in the Framed SPI mode. The user should program this bit to '0' for the Framed SPI mode (FRMEN = 1).

4: When AUDEN = 1, the SPI module functions as if the CKP bit is equal to '1', regardless of the actual value of CKP.

REGISTER 17-2: SPIxCON2: SPI CONTROL REGISTER 2

Bit Range	Bit 31/23/15/7	Bit 30/22/14/6	Bit 29/21/13/5	Bit 28/20/12/4	Bit 27/19/11/3	Bit 26/18/10/2	Bit 25/17/9/1	Bit 24/16/8/0
31:24	U-0	U-0	U-0	U-0	U-0	U-0	U-0	U-0
	—	—	—	—	—	—	—	—
23:16	U-0	U-0	U-0	U-0	U-0	U-0	U-0	U-0
	—	—	—	—	—	—	—	—
15:8	R/W-0	U-0	U-0	R/W-0	R/W-0	R/W-0	R/W-0	R/W-0
	SPISGNEXT	—	—	FRMERREN	SPIROVEN	SPITUREN	IGNROV	IGNTUR
7:0	R/W-0	U-0	U-0	U-0	R/W-0	U-0	R/W-0	R/W-0
	AUDEN(1)	—	—	—	AUDMONO(1,2)	—	AUDMOD<1:0>(1,2)	

Legend:			
R = Readable bit	W = Writable bit	U = Unimplemented bit, read as ‘0’	
-n = Value at POR	‘1’ = Bit is set	‘0’ = Bit is cleared	x = Bit is unknown

bit 31-16 **Unimplemented:** Read as ‘0’

bit 15 **SPISGNEXT:** Sign Extend Read Data from the RX FIFO bit
1 = Data from RX FIFO is sign extended
0 = Data from RX FIFO is not sign extended

bit 14-13 **Unimplemented:** Read as ‘0’

bit 12 **FRMERREN:** Enable Interrupt Events via FRMERR bit
1 = Frame Error overflow generates error events
0 = Frame Error does not generate error events

bit 11 **SPIROVEN:** Enable Interrupt Events via SPIROV bit
1 = Receive overflow generates error events
0 = Receive overflow does not generate error events

bit 10 **SPITUREN:** Enable Interrupt Events via SPITUR bit
1 = Transmit underrun generates error events
0 = Transmit underrun does not generate error events

bit 9 **IGNROV:** Ignore Receive Overflow bit (for Audio Data Transmissions)
1 = A ROV is not a critical error; during ROV data in the FIFO is not overwritten by receive data
0 = A ROV is a critical error that stops SPI operation

bit 8 **IGNTUR:** Ignore Transmit Underrun bit (for Audio Data Transmissions)
1 = A TUR is not a critical error and zeros are transmitted until the SPIxTXB is not empty
0 = A TUR is a critical error that stops SPI operation

bit 7 **AUDEN:** Enable Audio CODEC Support bit(1)
1 = Audio protocol enabled
0 = Audio protocol disabled

bit 6-5 **Unimplemented:** Read as ‘0’

bit 3 **AUDMONO:** Transmit Audio Data Format bit(1,2)
1 = Audio data is mono (Each data word is transmitted on both left and right channels)
0 = Audio data is stereo

bit 2 **Unimplemented:** Read as ‘0’

bit 1-0 **AUDMOD<1:0>:** Audio Protocol Mode bit(1,2)
11 = PCM/DSP mode
10 = Right-Justified mode
01 = Left-Justified mode
00 = I^2S mode

Note 1: This bit can only be written when the ON bit = 0.
2: This bit is only valid for AUDEN = 1.

© 2011-2016 Microchip Technology Inc.

REGISTER 17-3: SPIxSTAT: SPI STATUS REGISTER

Bit Range	Bit 31/23/15/7	Bit 30/22/14/6	Bit 29/21/13/5	Bit 28/20/12/4	Bit 27/19/11/3	Bit 26/18/10/2	Bit 25/17/9/1	Bit 24/16/8/0
31:24	U-0	U-0	U-0	R-0	R-0	R-0	R-0	R-0
	—	—	—	RXBUFELM<4:0>				
23:16	U-0	U-0	U-0	R-0	R-0	R-0	R-0	R-0
	—	—	—	TXBUFELM<4:0>				
15:8	U-0	U-0	U-0	R/C-0, HS	R-0	U-0	U-0	R-0
	—	—	—	FRMERR	SPIBUSY	—	—	SPITUR
7:0	R-0	R/W-0	R-0	U-0	R-1	U-0	R-0	R-0
	SRMT	SPIROV	SPIRBE	—	SPITBE	—	SPITBF	SPIRBF

Legend:	C = Clearable bit	HS = Set in hardware	
R = Readable bit	W = Writable bit	U = Unimplemented bit, read as ‘0’	
-n = Value at POR	‘1’ = Bit is set	‘0’ = Bit is cleared	x = Bit is unknown

bit 31-29 **Unimplemented:** Read as ‘0’

bit 28-24 **RXBUFELM<4:0>:** Receive Buffer Element Count bits (valid only when ENHBUF = 1)

bit 23-21 **Unimplemented:** Read as ‘0’

bit 20-16 **TXBUFELM<4:0>:** Transmit Buffer Element Count bits (valid only when ENHBUF = 1)

bit 15-13 **Unimplemented:** Read as ‘0’

bit 12 **FRMERR:** SPI Frame Error status bit
1 = Frame error detected
0 = No Frame error detected
This bit is only valid when FRMEN = 1.

bit 11 **SPIBUSY:** SPI Activity Status bit
1 = SPI peripheral is currently busy with some transactions
0 = SPI peripheral is currently idle

bit 10-9 **Unimplemented:** Read as ‘0’

bit 8 **SPITUR:** Transmit Under Run bit
1 = Transmit buffer has encountered an underrun condition
0 = Transmit buffer has no underrun condition
This bit is only valid in Framed Sync mode; the underrun condition must be cleared by disabling (ON bit = 0) and re-enabling (ON bit = 1) the module, or writing a ‘0’ to SPITUR.

bit 7 **SRMT:** Shift Register Empty bit (valid only when ENHBUF = 1)
1 = When SPI module shift register is empty
0 = When SPI module shift register is not empty

bit 6 **SPIROV:** Receive Overflow Flag bit
1 = A new data is completely received and discarded. The user software has not read the previous data in the SPIxBUF register.
0 = No overflow has occurred
This bit is set in hardware; can bit only be cleared by disabling (ON bit = 0) and re-enabling (ON bit = 1) the module, or by writing a ‘0’ to SPIROV.

bit 5 **SPIRBE:** RX FIFO Empty bit (valid only when ENHBUF = 1)
1 = RX FIFO is empty (CRPTR = SWPTR)
0 = RX FIFO is not empty (CRPTR ≠ SWPTR)

bit 4 **Unimplemented:** Read as ‘0’

REGISTER 17-3: SPIxSTAT: SPI STATUS REGISTER

bit 3 **SPITBE:** SPI Transmit Buffer Empty Status bit

1 = Transmit buffer, SPIxTXB is empty
0 = Transmit buffer, SPIxTXB is not empty

Automatically set in hardware when SPI transfers data from SPIxTXB to SPIxSR.

Automatically cleared in hardware when SPIxBUF is written to, loading SPIxTXB.

bit 2 **Unimplemented:** Read as '0'

bit 1 **SPITBF:** SPI Transmit Buffer Full Status bit

1 = Transmit not yet started, SPITXB is full
0 = Transmit buffer is not full

Standard Buffer Mode:

Automatically set in hardware when the core writes to the SPIBUF location, loading SPITXB.
Automatically cleared in hardware when the SPI module transfers data from SPITXB to SPISR.

Enhanced Buffer Mode:

Set when CWPTR + 1 = SRPTR; cleared otherwise

bit 0 **SPIRBF:** SPI Receive Buffer Full Status bit

1 = Receive buffer, SPIxRXB is full
0 = Receive buffer, SPIxRXB is not full

Standard Buffer Mode:

Automatically set in hardware when the SPI module transfers data from SPIxSR to SPIxRXB.
Automatically cleared in hardware when SPIxBUF is read from, reading SPIxRXB.

Enhanced Buffer Mode:

Set when SWPTR + 1 = CRPTR; cleared otherwise

© 2011-2016 Microchip Technology Inc.

18.0 INTER-INTEGRATED CIRCUIT (I^2C)

Note: This data sheet summarizes the features of the PIC32MX1XX/2XX 28/36/44-pin Family of devices. It is not intended to be a comprehensive reference source. To complement the information in this data sheet, refer to **Section 24. "Inter-Integrated Circuit (I^2C)"** (DS60001116), which is available from the *Documentation > Reference Manual* section of the Microchip PIC32 web site (www.microchip.com/pic32).

The I^2C module provides complete hardware support for both Slave and Multi-Master modes of the I^2C serial communication standard. Figure 18-1 illustrates the I^2C module block diagram.

Each I^2C module has a 2-pin interface: the SCLx pin is clock and the SDAx pin is data.

Each I^2C module offers the following key features:

- I^2C interface supporting both master and slave operation
- I^2C Slave mode supports 7-bit and 10-bit addressing
- I^2C Master mode supports 7-bit and 10-bit addressing
- I^2C port allows bidirectional transfers between master and slaves
- Serial clock synchronization for the I^2C port can be used as a handshake mechanism to suspend and resume serial transfer (SCLREL control)
- I^2C supports multi-master operation; detects bus collision and arbitrates accordingly
- Provides support for address bit masking

FIGURE 18-1: I²C BLOCK DIAGRAM

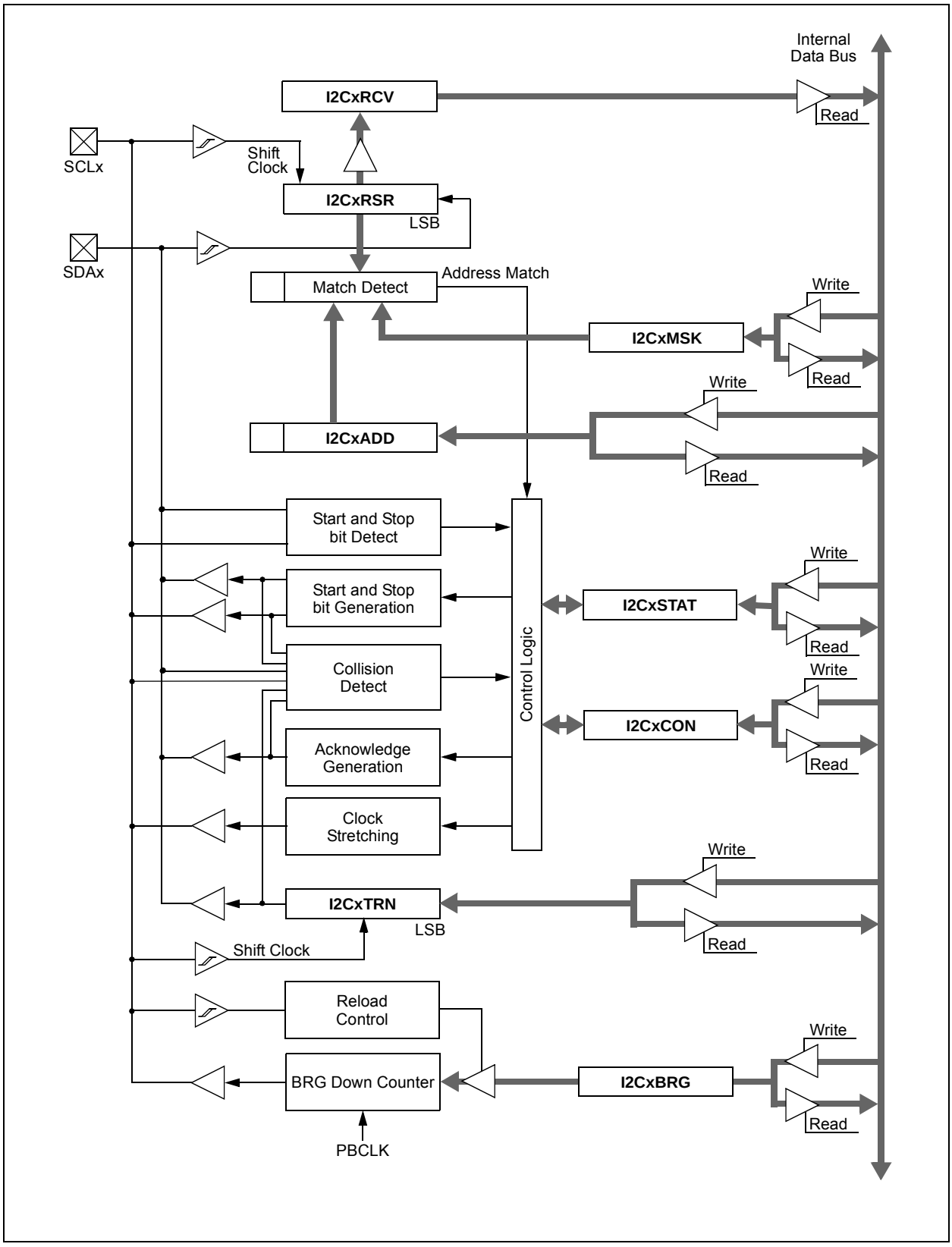

© 2011-2016 Microchip Technology Inc.

18.1 I2C Control Registers

TABLE 18-1: I2C1 AND I2C2 REGISTER MAP

Virtual Address (BF80_#)	Register Name(1)	Bit Range	Bits 31/15	30/14	29/13	28/12	27/11	26/10	25/9	24/8	23/7	22/6	21/5	20/4	19/3	18/2	17/1	16/0	All Resets
5000	I2C1CON	31:16	—	—	—	—	—	—	—	—	—	—	—	—	—	—	—	—	0000
		15:0	ON	—	SIDL	SCLREL	STRICT	A10M	DISSLW	SMEN	GCEN	STREN	ACKDT	ACKEN	RCEN	PEN	RSEN	SEN	1000
5010	I2C1STAT	31:16	—	—	—	—	—	—	—	—	—	—	—	—	—	—	—	—	0000
		15:0	ACKSTAT	TRSTAT	—	—	—	BCL	GCSTAT	ADD10	IWCOL	I2COV	D_A	P	S	R_W	RBF	TBF	0000
5020	I2C1ADD	31:16	—	—	—	—	—	—	—	—	—	—	—	—	—	—	—	—	0000
		15:0	—	—	—	—	—	—	Address Register										0000
5030	I2C1MSK	31:16	—	—	—	—	—	—	—	—	—	—	—	—	—	—	—	—	0000
		15:0	—	—	—	—	—	—	Address Mask Register										0000
5040	I2C1BRG	31:16	—	—	—	—	—	—	—	—	—	—	—	—	—	—	—	—	0000
		15:0	—	—	—	—	Baud Rate Generator Register												0000
5050	I2C1TRN	31:16	—	—	—	—	—	—	—	—	—	—	—	—	—	—	—	—	0000
		15:0	—	—	—	—	—	—	—	—	Transmit Register								0000
5060	I2C1RCV	31:16	—	—	—	—	—	—	—	—	—	—	—	—	—	—	—	—	0000
		15:0	—	—	—	—	—	—	—	—	Receive Register								0000
5100	I2C2CON	31:16	—	—	—	—	—	—	—	—	—	—	—	—	—	—	—	—	0000
		15:0	ON	—	SIDL	SCLREL	STRICT	A10M	DISSLW	SMEN	GCEN	STREN	ACKDT	ACKEN	RCEN	PEN	RSEN	SEN	1000
5110	I2C2STAT	31:16	—	—	—	—	—	—	—	—	—	—	—	—	—	—	—	—	0000
		15:0	ACKSTAT	TRSTAT	—	—	—	BCL	GCSTAT	ADD10	IWCOL	I2COV	D_A	P	S	R_W	RBF	TBF	0000
5120	I2C2ADD	31:16	—	—	—	—	—	—	—	—	—	—	—	—	—	—	—	—	0000
		15:0	—	—	—	—	—	—	Address Register										0000
5130	I2C2MSK	31:16	—	—	—	—	—	—	—	—	—	—	—	—	—	—	—	—	0000
		15:0	—	—	—	—	—	—	Address Mask Register										0000
5140	I2C2BRG	31:16	—	—	—	—	—	—	—	—	—	—	—	—	—	—	—	—	0000
		15:0	—	—	—	—	Baud Rate Generator Register												0000
5150	I2C2TRN	31:16	—	—	—	—	—	—	—	—	—	—	—	—	—	—	—	—	0000
		15:0	—	—	—	—	—	—	—	—	Transmit Register								0000
5160	I2C2RCV	31:16	—	—	—	—	—	—	—	—	—	—	—	—	—	—	—	—	0000
		15:0	—	—	—	—	—	—	—	—	Receive Register								0000

Legend: x = unknown value on Reset; — = unimplemented, read as ‘0’. Reset values are shown in hexadecimal.

Note 1: All registers in this table except I2CxRCV have corresponding CLR, SET and INV registers at their virtual addresses, plus offsets of 0x4, 0x8 and 0xC, respectively. See **Section 11.2 “CLR, SET and INV Registers”** for more information.

© 2011-2016 Microchip Technology Inc.

REGISTER 18-1: I2CxCON: I^{2}C CONTROL REGISTER

Bit Range	Bit 31/23/15/7	Bit 30/22/14/6	Bit 29/21/13/5	Bit 28/20/12/4	Bit 27/19/11/3	Bit 26/18/10/2	Bit 25/17/9/1	Bit 24/16/8/0
31:24	U-0	U-0	U-0	U-0	U-0	U-0	U-0	U-0
	—	—	—	—	—	—	—	—
23:16	U-0	U-0	U-0	U-0	U-0	U-0	U-0	U-0
	—	—	—	—	—	—	—	—
15:8	R/W-0	U-0	R/W-0	R/W-1, HC	R/W-0	R/W-0	R/W-0	R/W-0
	ON(1)	—	SIDL	SCLREL	STRICT	A10M	DISSLW	SMEN
7:0	R/W-0	R/W-0	R/W-0	R/W-0, HC	R/W-0, HC	R/W-0, HC	R/W-0, HC	R/W-0, HC
	GCEN	STREN	ACKDT	ACKEN	RCEN	PEN	RSEN	SEN

Legend:	HC = Cleared in Hardware		
R = Readable bit	W = Writable bit	U = Unimplemented bit, read as ‘0’	
-n = Value at POR	‘1’ = Bit is set	‘0’ = Bit is cleared	x = Bit is unknown

bit 31-16 **Unimplemented:** Read as ‘0’

bit 15 **ON:** I^{2}C Enable bit(1)
- 1 = Enables the I^{2}C module and configures the SDA and SCL pins as serial port pins
- 0 = Disables the I^{2}C module; all I^{2}C pins are controlled by PORT functions

bit 14 **Unimplemented:** Read as ‘0’

bit 13 **SIDL:** Stop in Idle Mode bit
- 1 = Discontinue module operation when the device enters Idle mode
- 0 = Continue module operation when the device enters Idle mode

bit 12 **SCLREL:** SCLx Release Control bit (when operating as I^{2}C slave)
- 1 = Release SCLx clock
- 0 = Hold SCLx clock low (clock stretch)

If STREN = 1:
Bit is R/W (i.e., software can write ‘0’ to initiate stretch and write ‘1’ to release clock). Hardware clear at beginning of slave transmission. Hardware clear at end of slave reception.

If STREN = 0:
Bit is R/S (i.e., software can only write ‘1’ to release clock). Hardware clear at beginning of slave transmission.

bit 11 **STRICT:** Strict I^{2}C Reserved Address Rule Enable bit
- 1 = Strict reserved addressing is enforced. Device does not respond to reserved address space or generate addresses in reserved address space.
- 0 = Strict I^{2}C Reserved Address Rule not enabled

bit 10 **A10M:** 10-bit Slave Address bit
- 1 = I2CxADD is a 10-bit slave address
- 0 = I2CxADD is a 7-bit slave address

bit 9 **DISSLW:** Disable Slew Rate Control bit
- 1 = Slew rate control disabled
- 0 = Slew rate control enabled

bit 8 **SMEN:** SMBus Input Levels bit
- 1 = Enable I/O pin thresholds compliant with SMBus specification
- 0 = Disable SMBus input thresholds

Note 1: When using 1:1 PBCLK divisor, the user’s software should not read/write the peripheral’s SFRs in the SYSCLK cycle immediately following the instruction that clears the module’s ON bit.

© 2011-2016 Microchip Technology Inc.

REGISTER 18-1: I2CxCON: I^{2}C CONTROL REGISTER (CONTINUED)

bit 7 **GCEN:** General Call Enable bit (when operating as I^{2}C slave)
1 = Enable interrupt when a general call address is received in the I2CxRSR (module is enabled for reception)
0 = General call address is disabled

bit 6 **STREN:** SCLx Clock Stretch Enable bit (when operating as I^{2}C slave)
Used in conjunction with SCLREL bit.
1 = Enable software or receive clock stretching
0 = Disable software or receive clock stretching

bit 5 **ACKDT:** Acknowledge Data bit (when operating as I^{2}C master, applicable during master receive)
Value that is transmitted when the software initiates an Acknowledge sequence.
1 = Send a NACK during an Acknowledge sequence
0 = Send an ACK during an Acknowledge sequence

bit 4 **ACKEN:** Acknowledge Sequence Enable bit (when operating as I^{2}C master, applicable during master receive)
1 = Initiate Acknowledge sequence on SDAx and SCLx pins and transmit ACKDT data bit. Hardware clear at end of master Acknowledge sequence.
0 = Acknowledge sequence not in progress

bit 3 **RCEN:** Receive Enable bit (when operating as I^{2}C master)
1 = Enables Receive mode for I^{2}C. Hardware clear at end of eighth bit of master receive data byte.
0 = Receive sequence not in progress

bit 2 **PEN:** Stop Condition Enable bit (when operating as I^{2}C master)
1 = Initiate Stop condition on SDAx and SCLx pins. Hardware clear at end of master Stop sequence.
0 = Stop condition not in progress

bit 1 **RSEN:** Repeated Start Condition Enable bit (when operating as I^{2}C master)
1 = Initiate Repeated Start condition on SDAx and SCLx pins. Hardware clear at end of master Repeated Start sequence.
0 = Repeated Start condition not in progress

bit 0 **SEN:** Start Condition Enable bit (when operating as I^{2}C master)
1 = Initiate Start condition on SDAx and SCLx pins. Hardware clear at end of master Start sequence.
0 = Start condition not in progress

Note 1: When using 1:1 PBCLK divisor, the user's software should not read/write the peripheral's SFRs in the SYSCLK cycle immediately following the instruction that clears the module's ON bit.

REGISTER 18-2: I2CxSTAT: I^{2}C STATUS REGISTER

Bit Range	Bit 31/23/15/7	Bit 30/22/14/6	Bit 29/21/13/5	Bit 28/20/12/4	Bit 27/19/11/3	Bit 26/18/10/2	Bit 25/17/9/1	Bit 24/16/8/0
31:24	U-0	U-0	U-0	U-0	U-0	U-0	U-0	U-0
	—	—	—	—	—	—	—	—
23:16	U-0	U-0	U-0	U-0	U-0	U-0	U-0	U-0
	—	—	—	—	—	—	—	—
15:8	R-0, HSC	R-0, HSC	U-0	U-0	U-0	R/C-0, HS	R-0, HSC	R-0, HSC
	ACKSTAT	TRSTAT	—	—	—	BCL	GCSTAT	ADD10
7:0	R/C-0, HS	R/C-0, HS	R-0, HSC	R/C-0, HSC	R/C-0, HSC	R-0, HSC	R-0, HSC	R-0, HSC
	IWCOL	I2COV	D_A	P	S	R_W	RBF	TBF

Legend:	HS = Set in hardware	HSC = Hardware set/cleared	
R = Readable bit	W = Writable bit	U = Unimplemented bit, read as ‘0’	
-n = Value at POR	‘1’ = Bit is set	‘0’ = Bit is cleared	C = Clearable bit

bit 31-16 **Unimplemented:** Read as ‘0’

bit 15 **ACKSTAT:** Acknowledge Status bit (when operating as I^{2}C master, applicable to master transmit operation)
1 = Acknowledge was not received from slave
0 = Acknowledge was received from slave
Hardware set or clear at end of slave Acknowledge.

bit 14 **TRSTAT:** Transmit Status bit (when operating as I^{2}C master, applicable to master transmit operation)
1 = Master transmit is in progress (8 bits + ACK)
0 = Master transmit is not in progress
Hardware set at beginning of master transmission. Hardware clear at end of slave Acknowledge.

bit 13-11 **Unimplemented:** Read as ‘0’

bit 10 **BCL:** Master Bus Collision Detect bit
1 = A bus collision has been detected during a master operation
0 = No collision
Hardware set at detection of bus collision. This condition can only be cleared by disabling (ON bit = 0) and re-enabling (ON bit = 1) the module.

bit 9 **GCSTAT:** General Call Status bit
1 = General call address was received
0 = General call address was not received
Hardware set when address matches general call address. Hardware clear at Stop detection.

bit 8 **ADD10:** 10-bit Address Status bit
1 = 10-bit address was matched
0 = 10-bit address was not matched
Hardware set at match of 2nd byte of matched 10-bit address. Hardware clear at Stop detection.

bit 7 **IWCOL:** Write Collision Detect bit
1 = An attempt to write the I2CxTRN register failed because the I^{2}C module is busy
0 = No collision
Hardware set at occurrence of write to I2CxTRN while busy (cleared by software).

bit 6 **I2COV:** Receive Overflow Flag bit
1 = A byte was received while the I2CxRCV register is still holding the previous byte
0 = No overflow
Hardware set at attempt to transfer I2CxRSR to I2CxRCV (cleared by software).

bit 5 **D_A:** Data/Address bit (when operating as I^{2}C slave)
1 = Indicates that the last byte received was data
0 = Indicates that the last byte received was device address
Hardware clear at device address match. Hardware set by reception of slave byte.

© 2011-2016 Microchip Technology Inc.

REGISTER 18-2: I2CxSTAT: I^{2}C STATUS REGISTER (CONTINUED)

bit 4 **P:** Stop bit
1 = Indicates that a Stop bit has been detected last
0 = Stop bit was not detected last
Hardware set or clear when Start, Repeated Start or Stop detected.

bit 3 **S:** Start bit
1 = Indicates that a Start (or Repeated Start) bit has been detected last
0 = Start bit was not detected last
Hardware set or clear when Start, Repeated Start or Stop detected.

bit 2 **R_W:** Read/Write Information bit (when operating as I^{2}C slave)
1 = Read – indicates data transfer is output from slave
0 = Write – indicates data transfer is input to slave
Hardware set or clear after reception of I^{2}C device address byte.

bit 1 **RBF:** Receive Buffer Full Status bit
1 = Receive complete, I2CxRCV is full
0 = Receive not complete, I2CxRCV is empty
Hardware set when I2CxRCV is written with received byte. Hardware clear when software reads I2CxRCV.

bit 0 **TBF:** Transmit Buffer Full Status bit
1 = Transmit in progress, I2CxTRN is full
0 = Transmit complete, I2CxTRN is empty
Hardware set when software writes I2CxTRN. Hardware clear at completion of data transmission.

NOTES:

© 2011-2016 Microchip Technology Inc.

19.0 UNIVERSAL ASYNCHRONOUS RECEIVER TRANSMITTER (UART)

Note: This data sheet summarizes the features of the PIC32MX1XX/2XX 28/36/44-pin Family of devices. It is not intended to be a comprehensive reference source. To complement the information in this data sheet, refer to **Section 21. "Universal Asynchronous Receiver Transmitter (UART)"** (DS60001107), which is available from the *Documentation > Reference Manual* section of the Microchip PIC32 web site (www.microchip.com/pic32).

The UART module is one of the serial I/O modules available in PIC32MX1XX/2XX 28/36/44-pin Family devices. The UART is a full-duplex, asynchronous communication channel that communicates with peripheral devices and personal computers through protocols, such as RS-232, RS-485, LIN, and IrDA®. The UART module also supports the hardware flow control option, with $\overline{\text{UxCTS}}$ and $\overline{\text{UxRTS}}$ pins, and also includes an IrDA encoder and decoder.

Key features of the UART module include:

- Full-duplex, 8-bit or 9-bit data transmission
- Even, Odd or No Parity options (for 8-bit data)
- One or two Stop bits
- Hardware auto-baud feature
- Hardware flow control option
- Fully integrated Baud Rate Generator (BRG) with 16-bit prescaler
- Baud rates ranging from 38 bps to 12.5 Mbps at 50 MHz
- 8-level deep First In First Out (FIFO) transmit data buffer
- 8-level deep FIFO receive data buffer
- Parity, framing and buffer overrun error detection
- Support for interrupt-only on address detect (9th bit = 1)
- Separate transmit and receive interrupts
- Loopback mode for diagnostic support
- LIN protocol support
- IrDA encoder and decoder with 16x baud clock output for external IrDA encoder/decoder support

Figure 19-1 illustrates a simplified block diagram of the UART module.

FIGURE 19-1: UART SIMPLIFIED BLOCK DIAGRAM

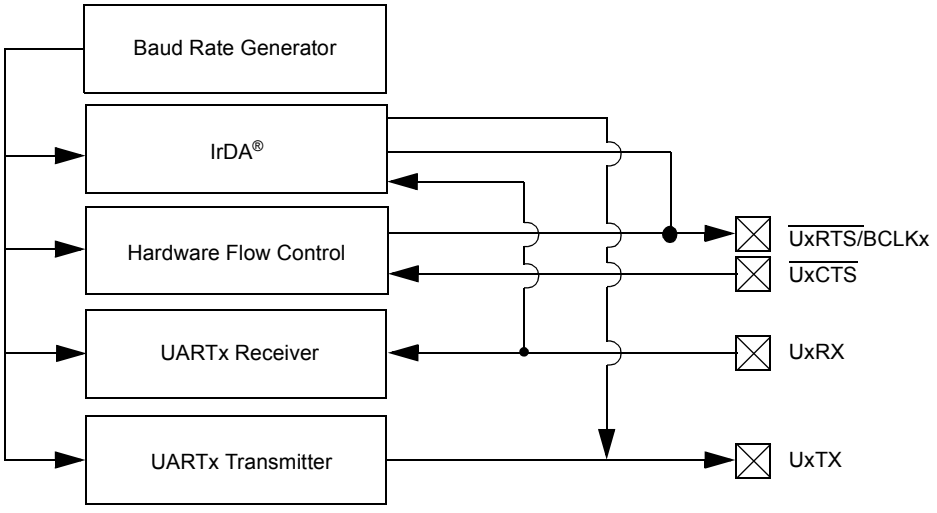

Note: Not all pins are available for all UART modules. Refer to the device-specific pin diagram for more information.

19.1 UART Control Registers

TABLE 19-1: UART1 AND UART2 REGISTER MAP

Virtual Address (BF80_#)	Register Name	Bit Range	Bits 31/15	30/14	29/13	28/12	27/11	26/10	25/9	24/8	23/7	22/6	21/5	20/4	19/3	18/2	17/1	16/0	All Resets
6000	U1MODE(1)	31:16	—	—	—	—	—	—	—	—	—	—	—	—	—	—	—	—	0000
		15:0	ON	—	SIDL	IREN	RTSMD	—	UEN<1:0>		WAKE	LPBACK	ABAUD	RXINV	BRGH	PDSEL<1:0>		STSEL	0000
6010	U1STA(1)	31:16	—	—	—	—	—	—	—	ADM_EN	ADDR<7:0>								0000
		15:0	UTXISEL<1:0>		UTXINV	URXEN	UTXBRK	UTXEN	UTXBF	TRMT	URXISEL<1:0>		ADDEN	RIDLE	PERR	FERR	OERR	URXDA	0110
6020	U1TXREG	31:16	—	—	—	—	—	—	—	—	—	—	—	—	—	—	—	—	0000
		15:0	—	—	—	—	—	—	—	Transmit Register									0000
6030	U1RXREG	31:16	—	—	—	—	—	—	—	—	—	—	—	—	—	—	—	—	0000
		15:0	—	—	—	—	—	—	—	Receive Register									0000
6040	U1BRG(1)	31:16	—	—	—	—	—	—	—	—	—	—	—	—	—	—	—	—	0000
		15:0	Baud Rate Generator Prescaler																0000
6200	U2MODE(1)	31:16	—	—	—	—	—	—	—	—	—	—	—	—	—	—	—	—	0000
		15:0	ON	—	SIDL	IREN	RTSMD	—	UEN<1:0>		WAKE	LPBACK	ABAUD	RXINV	BRGH	PDSEL<1:0>		STSEL	0000
6210	U2STA(1)	31:16	—	—	—	—	—	—	—	ADM_EN	ADDR<7:0>								0000
		15:0	UTXISEL<1:0>		UTXINV	URXEN	UTXBRK	UTXEN	UTXBF	TRMT	URXISEL<1:0>		ADDEN	RIDLE	PERR	FERR	OERR	URXDA	0110
6220	U2TXREG	31:16	—	—	—	—	—	—	—	—	—	—	—	—	—	—	—	—	0000
		15:0	—	—	—	—	—	—	—	Transmit Register									0000
6230	U2RXREG	31:16	—	—	—	—	—	—	—	—	—	—	—	—	—	—	—	—	0000
		15:0	—	—	—	—	—	—	—	Receive Register									0000
6240	U2BRG(1)	31:16	—	—	—	—	—	—	—	—	—	—	—	—	—	—	—	—	0000
		15:0	Baud Rate Generator Prescaler																0000

Legend: x = unknown value on Reset; — = unimplemented, read as '0'. Reset values are shown in hexadecimal.

Note 1: This register has corresponding CLR, SET and INV registers at its virtual address, plus an offset of 0x4, 0x8 and 0xC, respectively. See **Section 11.2 "CLR, SET and INV Registers"** for more information.

© 2011-2016 Microchip Technology Inc.

REGISTER 19-1: UxMODE: UARTx MODE REGISTER

Bit Range	Bit 31/23/15/7	Bit 30/22/14/6	Bit 29/21/13/5	Bit 28/20/12/4	Bit 27/19/11/3	Bit 26/18/10/2	Bit 25/17/9/1	Bit 24/16/8/0
31:24	U-0	U-0	U-0	U-0	U-0	U-0	U-0	U-0
	—	—	—	—	—	—	—	—
23:16	U-0	U-0	U-0	U-0	U-0	U-0	U-0	U-0
	—	—	—	—	—	—	—	—
15:8	R/W-0	U-0	R/W-0	R/W-0	R/W-0	U-0	R/W-0	R/W-0
	ON(1)	—	SIDL	IREN	RTSMD	—	UEN<1:0>	
7:0	R/W-0	R/W-0	R/W-0	R/W-0	R/W-0	R/W-0	R/W-0	R/W-0
	WAKE	LPBACK	ABAUD	RXINV	BRGH	PDSEL<1:0>		STSEL

Legend:			
R = Readable bit	W = Writable bit	U = Unimplemented bit, read as ‘0’	
-n = Value at POR	‘1’ = Bit is set	‘0’ = Bit is cleared	x = Bit is unknown

bit 31-16 **Unimplemented:** Read as ‘0’

bit 15 **ON:** UARTx Enable bit(1)
- 1 = UARTx is enabled. UARTx pins are controlled by UARTx as defined by the UEN<1:0> and UTXEN control bits.
- 0 = UARTx is disabled. All UARTx pins are controlled by corresponding bits in the PORTx, TRISx and LATx registers; UARTx power consumption is minimal.

bit 14 **Unimplemented:** Read as ‘0’

bit 13 **SIDL:** Stop in Idle Mode bit
- 1 = Discontinue module operation when the device enters Idle mode
- 0 = Continue module operation when the device enters Idle mode

bit 12 **IREN:** IrDA Encoder and Decoder Enable bit
- 1 = IrDA is enabled
- 0 = IrDA is disabled

bit 11 **RTSMD:** Mode Selection for $\overline{\text{UxRTS}}$ Pin bit
- 1 = $\overline{\text{UxRTS}}$ pin is in Simplex mode
- 0 = $\overline{\text{UxRTS}}$ pin is in Flow Control mode

bit 10 **Unimplemented:** Read as ‘0’

bit 9-8 **UEN<1:0>:** UARTx Enable bits
- 11 = UxTX, UxRX and UxBCLK pins are enabled and used; $\overline{\text{UxCTS}}$ pin is controlled by corresponding bits in the PORTx register
- 10 = UxTX, UxRX, $\overline{\text{UxCTS}}$ and $\overline{\text{UxRTS}}$ pins are enabled and used
- 01 = UxTX, UxRX and $\overline{\text{UxRTS}}$ pins are enabled and used; $\overline{\text{UxCTS}}$ pin is controlled by corresponding bits in the PORTx register
- 00 = UxTX and UxRX pins are enabled and used; $\overline{\text{UxCTS}}$ and $\overline{\text{UxRTS}}$/UxBCLK pins are controlled by corresponding bits in the PORTx register

bit 7 **WAKE:** Enable Wake-up on Start bit Detect During Sleep Mode bit
- 1 = Wake-up enabled
- 0 = Wake-up disabled

bit 6 **LPBACK:** UARTx Loopback Mode Select bit
- 1 = Loopback mode is enabled
- 0 = Loopback mode is disabled

Note 1: When using 1:1 PBCLK divisor, the user software should not read/write the peripheral SFRs in the SYSCLK cycle immediately following the instruction that clears the module’s ON bit.

REGISTER 19-1: UxMODE: UARTx MODE REGISTER (CONTINUED)

bit 5 **ABAUD:** Auto-Baud Enable bit
1 = Enable baud rate measurement on the next character – requires reception of Sync character (0x55); cleared by hardware upon completion
0 = Baud rate measurement disabled or completed

bit 4 **RXINV:** Receive Polarity Inversion bit
1 = UxRX Idle state is '0'
0 = UxRX Idle state is '1'

bit 3 **BRGH:** High Baud Rate Enable bit
1 = High-Speed mode – 4x baud clock enabled
0 = Standard Speed mode – 16x baud clock enabled

bit 2-1 **PDSEL<1:0>:** Parity and Data Selection bits
11 = 9-bit data, no parity
10 = 8-bit data, odd parity
01 = 8-bit data, even parity
00 = 8-bit data, no parity

bit 0 **STSEL:** Stop Selection bit
1 = 2 Stop bits
0 = 1 Stop bit

Note 1: When using 1:1 PBCLK divisor, the user software should not read/write the peripheral SFRs in the SYSCLK cycle immediately following the instruction that clears the module's ON bit.

© 2011-2016 Microchip Technology Inc.

REGISTER 19-2: UxSTA: UARTx STATUS AND CONTROL REGISTER

Bit Range	Bit 31/23/15/7	Bit 30/22/14/6	Bit 29/21/13/5	Bit 28/20/12/4	Bit 27/19/11/3	Bit 26/18/10/2	Bit 25/17/9/1	Bit 24/16/8/0
31:24	U-0	U-0	U-0	U-0	U-0	U-0	U-0	R/W-0
	—	—	—	—	—	—	—	ADM_EN
23:16	R/W-0	R/W-0	R/W-0	R/W-0	R/W-0	R/W-0	R/W-0	R/W-0
	ADDR<7:0>							
15:8	R/W-0	R/W-0	R/W-0	R/W-0	R/W-0	R/W-0	R-0	R-1
	UTXISEL<1:0>		UTXINV	URXEN	UTXBRK	UTXEN	UTXBF	TRMT
7:0	R/W-0	R/W-0	R/W-0	R-1	R-0	R-0	R/W-0	R-0
	URXISEL<1:0>		ADDEN	RIDLE	PERR	FERR	OERR	URXDA

Legend:			
R = Readable bit	W = Writable bit	U = Unimplemented bit, read as ‘0’	
-n = Value at POR	‘1’ = Bit is set	‘0’ = Bit is cleared	x = Bit is unknown

bit 31-25 **Unimplemented:** Read as ‘0’

bit 24 **ADM_EN:** Automatic Address Detect Mode Enable bit
1 = Automatic Address Detect mode is enabled
0 = Automatic Address Detect mode is disabled

bit 23-16 **ADDR<7:0>:** Automatic Address Mask bits
When the ADM_EN bit is ‘1’, this value defines the address character to use for automatic address detection.

bit 15-14 **UTXISEL<1:0>:** TX Interrupt Mode Selection bits
11 = Reserved, do not use
10 = Interrupt is generated and asserted while the transmit buffer is empty
01 = Interrupt is generated and asserted when all characters have been transmitted
00 = Interrupt is generated and asserted while the transmit buffer contains at least one empty space

bit 13 **UTXINV:** Transmit Polarity Inversion bit
If IrDA mode is disabled (i.e., IREN (UxMODE<12>) is ‘0’):
1 = UxTX Idle state is ‘0’
0 = UxTX Idle state is ‘1’

If IrDA mode is enabled (i.e., IREN (UxMODE<12>) is ‘1’):
1 = IrDA encoded UxTX Idle state is ‘1’
0 = IrDA encoded UxTX Idle state is ‘0’

bit 12 **URXEN:** Receiver Enable bit
1 = UARTx receiver is enabled. UxRX pin is controlled by UARTx (if ON = 1)
0 = UARTx receiver is disabled. UxRX pin is ignored by the UARTx module. UxRX pin is controlled by port.

bit 11 **UTXBRK:** Transmit Break bit
1 = Send Break on next transmission. Start bit followed by twelve ‘0’ bits, followed by Stop bit; cleared by hardware upon completion
0 = Break transmission is disabled or completed

bit 10 **UTXEN:** Transmit Enable bit
1 = UARTx transmitter is enabled. UxTX pin is controlled by UARTx (if ON = 1).
0 = UARTx transmitter is disabled. Any pending transmission is aborted and buffer is reset. UxTX pin is controlled by port.

bit 9 **UTXBF:** Transmit Buffer Full Status bit (read-only)
1 = Transmit buffer is full
0 = Transmit buffer is not full, at least one more character can be written

bit 8 **TRMT:** Transmit Shift Register is Empty bit (read-only)
1 = Transmit shift register is empty and transmit buffer is empty (the last transmission has completed)
0 = Transmit shift register is not empty, a transmission is in progress or queued in the transmit buffer

REGISTER 19-2: UxSTA: UARTx STATUS AND CONTROL REGISTER (CONTINUED)

bit 7-6 **URXISEL<1:0>:** Receive Interrupt Mode Selection bit
11 = Reserved; do not use
10 = Interrupt flag bit is asserted while receive buffer is 3/4 or more full (i.e., has 6 or more data characters)
01 = Interrupt flag bit is asserted while receive buffer is 1/2 or more full (i.e., has 4 or more data characters)
00 = Interrupt flag bit is asserted while receive buffer is not empty (i.e., has at least 1 data character)

bit 5 **ADDEN:** Address Character Detect bit (bit 8 of received data = 1)
1 = Address Detect mode is enabled. If 9-bit mode is not selected, this control bit has no effect.
0 = Address Detect mode is disabled

bit 4 **RIDLE:** Receiver Idle bit (read-only)
1 = Receiver is Idle
0 = Data is being received

bit 3 **PERR:** Parity Error Status bit (read-only)
1 = Parity error has been detected for the current character
0 = Parity error has not been detected

bit 2 **FERR:** Framing Error Status bit (read-only)
1 = Framing error has been detected for the current character
0 = Framing error has not been detected

bit 1 **OERR:** Receive Buffer Overrun Error Status bit.
This bit is set in hardware and can only be cleared (= 0) in software. Clearing a previously set OERR bit resets the receiver buffer and the RSR to an empty state.
1 = Receive buffer has overflowed
0 = Receive buffer has not overflowed

bit 0 **URXDA:** Receive Buffer Data Available bit (read-only)
1 = Receive buffer has data, at least one more character can be read
0 = Receive buffer is empty

© 2011-2016 Microchip Technology Inc.

Figure 19-2 and Figure 19-3 illustrate typical receive and transmit timing for the UART module.

FIGURE 19-2: UART RECEPTION

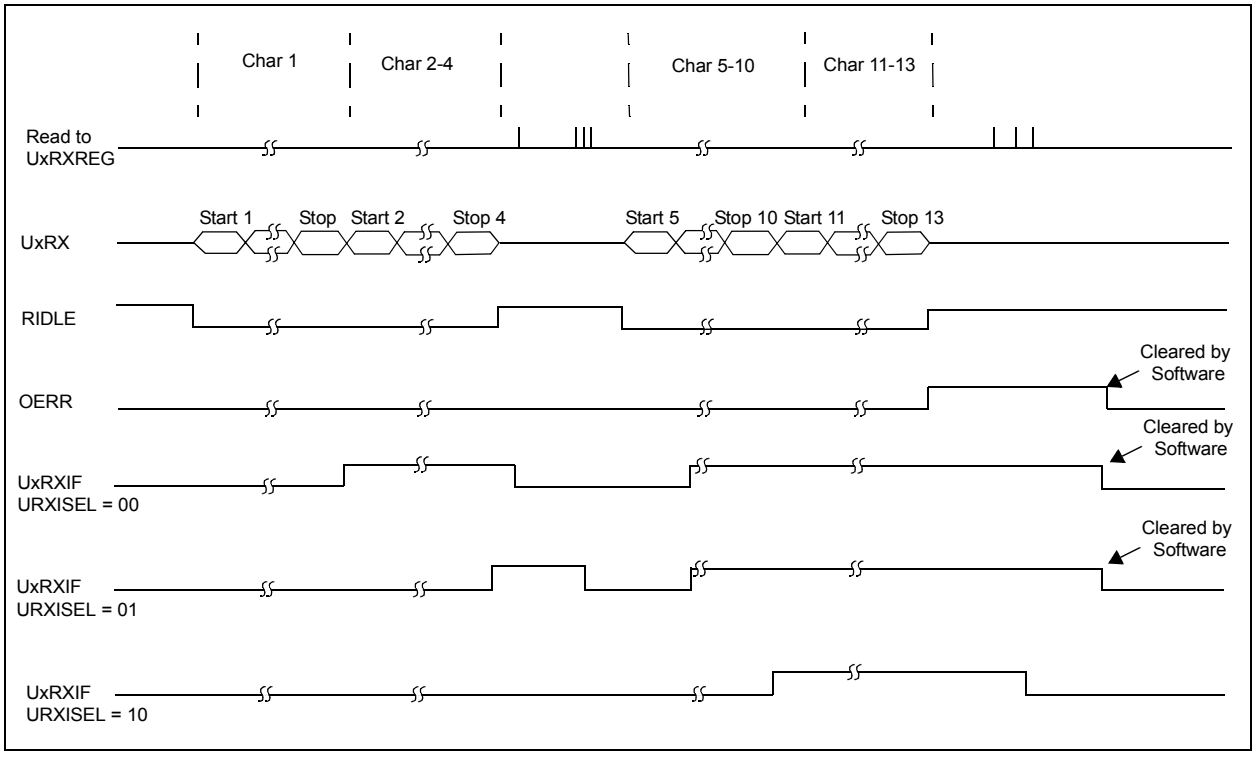

FIGURE 19-3: TRANSMISSION (8-BIT OR 9-BIT DATA)

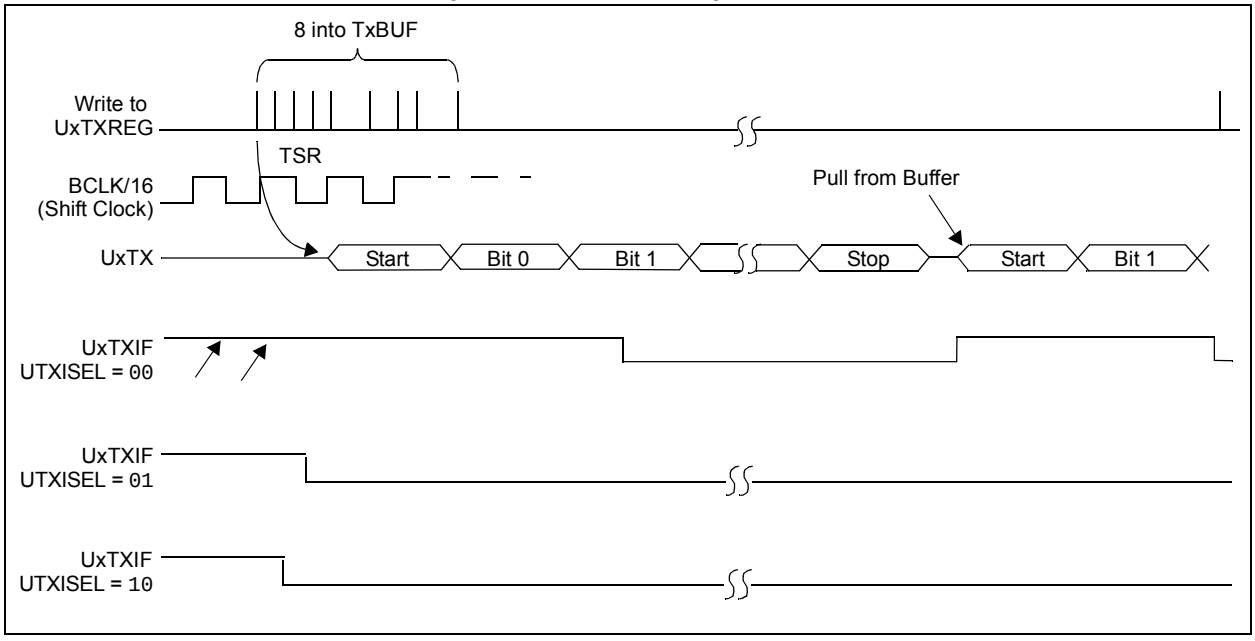

NOTES:

© 2011-2016 Microchip Technology Inc.

20.0 PARALLEL MASTER PORT (PMP)

Note: This data sheet summarizes the features of the PIC32MX1XX/2XX 28/36/44-pin Family of devices. It is not intended to be a comprehensive reference source. To complement the information in this data sheet, refer to **Section 13. "Parallel Master Port (PMP)"** (DS60001128), which is available from the *Documentation > Reference Manual* section of the Microchip PIC32 web site (www.microchip.com/pic32).

The PMP is a parallel 8-bit input/output module specifically designed to communicate with a wide variety of parallel devices, such as communications peripherals, LCDs, external memory devices and microcontrollers. Because the interface to parallel peripherals varies significantly, the PMP module is highly configurable.

Key features of the PMP module include:

- Fully multiplexed address/data mode
- Demultiplexed or partially multiplexed address/data mode
  - up to 11 address lines with single Chip Select
  - up to 12 address lines without Chip Select
- One Chip Select line
- Programmable strobe options
  - Individual read and write strobes or;
  - Read/$\overline{\text{write}}$ strobe with enable strobe
- Address auto-increment/auto-decrement
- Programmable address/data multiplexing
- Programmable polarity on control signals
- Legacy parallel slave port support
- Enhanced parallel slave support
  - Address support
  - 4-byte deep auto-incrementing buffer
- Programmable Wait states
- Selectable input voltage levels

Figure 20-1 illustrates the PMP module block diagram.

FIGURE 20-1: PMP MODULE PINOUT AND CONNECTIONS TO EXTERNAL DEVICES

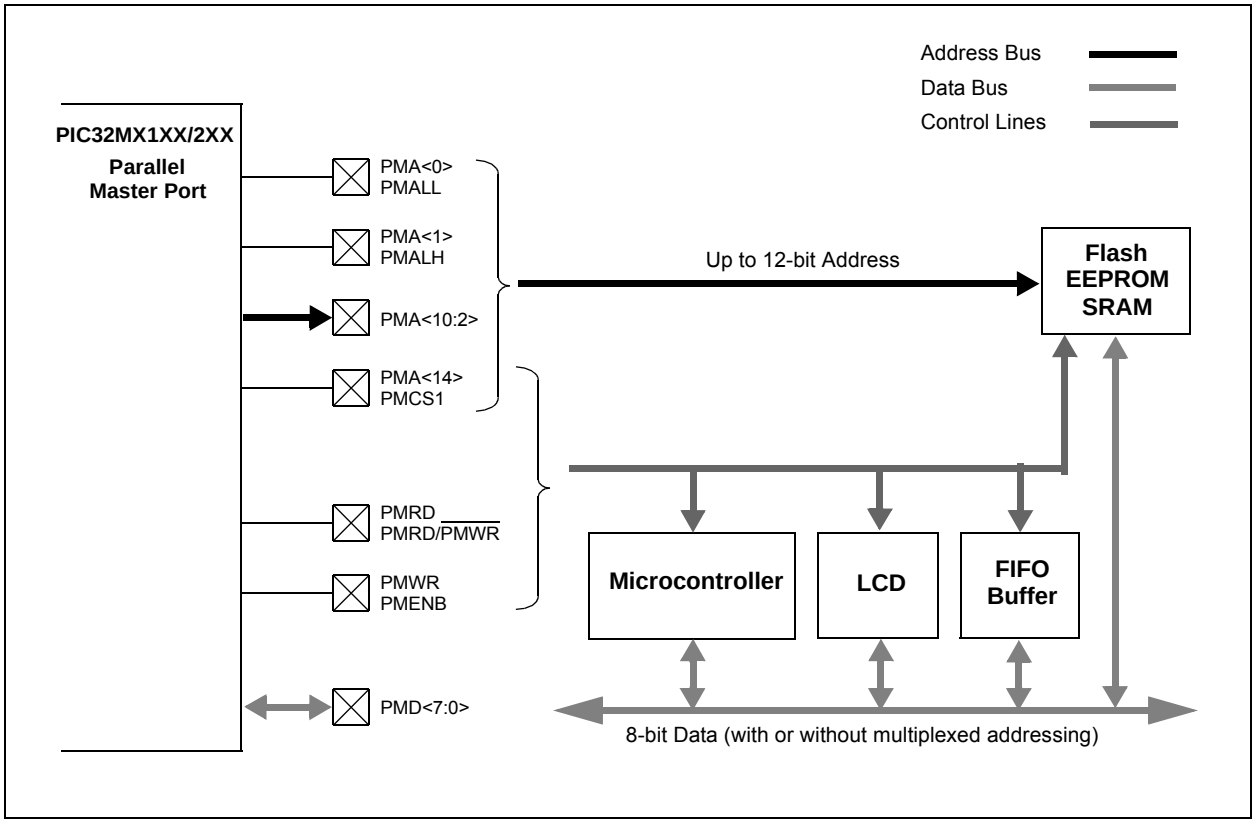

20.1 PMP Control Registers

TABLE 20-1: PARALLEL MASTER PORT REGISTER MAP

Virtual Address (BF80_#)	Register Name(1)	Bit Range	Bits 31/15	30/14	29/13	28/12	27/11	26/10	25/9	24/8	23/7	22/6	21/5	20/4	19/3	18/2	17/1	16/0	All Resets
7000	PMCON	31:16	—	—	—	—	—	—	—	—	—	—	—	—	—	—	—	—	0000
		15:0	ON	—	SIDL	ADRMUX<1:0>		PMPTTL	PTWREN	PTRDEN	CSF<1:0>		ALP	—	CS1P	—	WRSP	RDSP	0000
7010	PMMODE	31:16	—	—	—	—	—	—	—	—	—	—	—	—	—	—	—	—	0000
		15:0	BUSY	IRQM<1:0>		INCM<1:0>		—	MODE<1:0>		WAITB<1:0>		WAITM<3:0>				WAITE<1:0>		0000
7020	PMADDR	31:16	—	—	—	—	—	—	—	—	—	—	—	—	—	—	—	—	0000
		15:0	—	CS1 ADDR14	—	—	—	ADDR<10:0>											0000
7030	PMDOUT	31:16	DATAOUT<31:0>																0000
		15:0																	0000
7040	PMDIN	31:16	DATAIN<31:0>																0000
		15:0																	0000
7050	PMAEN	31:16	—	—	—	—	—	—	—	—	—	—	—	—	—	—	—	—	0000
		15:0	—	PTEN14	—	—	—	PTEN<10:0>											0000
7060	PMSTAT	31:16	—	—	—	—	—	—	—	—	—	—	—	—	—	—	—	—	0000
		15:0	IBF	IBOV	—	—	IB3F	IB2F	IB1F	IB0F	OBE	OBUF	—	—	OB3E	OB2E	OB1E	OB0E	008F

Legend: x = unknown value on Reset; — = unimplemented, read as ‘0’. Reset values are shown in hexadecimal.

Note 1: All registers in this table have corresponding CLR, SET and INV registers at their virtual addresses, plus offsets of 0x4, 0x8 and 0xC, respectively. See **Section 11.2 “CLR, SET and INV Registers”** for more information.

© 2011-2016 Microchip Technology Inc.

REGISTER 20-1: PMCON: PARALLEL PORT CONTROL REGISTER

Bit Range	Bit 31/23/15/7	Bit 30/22/14/6	Bit 29/21/13/5	Bit 28/20/12/4	Bit 27/19/11/3	Bit 26/18/10/2	Bit 25/17/9/1	Bit 24/16/8/0
31:24	U-0	U-0	U-0	U-0	U-0	U-0	U-0	U-0
	—	—	—	—	—	—	—	—
23:16	U-0	U-0	U-0	U-0	U-0	U-0	U-0	U-0
	—	—	—	—	—	—	—	—
15:8	R/W-0	U-0	R/W-0	R/W-0	R/W-0	R/W-0	R/W-0	R/W-0
	ON(1)	—	SIDL	ADRMUX<1:0>		PMPTTL	PTWREN	PTRDEN
7:0	R/W-0	R/W-0	R/W-0	U-0	R/W-0	U-0	R/W-0	R/W-0
	CSF<1:0>(2)		ALP(2)	—	CS1P(2)	—	WRSP	RDSP

Legend:			
R = Readable bit	W = Writable bit	U = Unimplemented bit, read as ‘0’	
-n = Value at POR	‘1’ = Bit is set	‘0’ = Bit is cleared	x = Bit is unknown

bit 31-16 **Unimplemented:** Read as ‘0’

bit 15 **ON:** Parallel Master Port Enable bit(1)
- 1 = PMP enabled
- 0 = PMP disabled, no off-chip access performed

bit 14 **Unimplemented:** Read as ‘0’

bit 13 **SIDL:** Stop in Idle Mode bit
- 1 = Discontinue module operation when the device enters Idle mode
- 0 = Continue module operation when the device enters Idle mode

bit 12-11 **ADRMUX<1:0>:** Address/Data Multiplexing Selection bits
- 11 = Lower 8 bits of address are multiplexed on PMD<7:0> pins; upper 8 bits are not used
- 10 = All 16 bits of address are multiplexed on PMD<7:0> pins
- 01 = Lower 8 bits of address are multiplexed on PMD<7:0> pins, upper bits are on PMA<10:8> and PMA<14>
- 00 = Address and data appear on separate pins

bit 10 **PMPTTL:** PMP Module TTL Input Buffer Select bit
- 1 = PMP module uses TTL input buffers
- 0 = PMP module uses Schmitt Trigger input buffer

bit 9 **PTWREN:** Write Enable Strobe Port Enable bit
- 1 = PMWR/PMENB port enabled
- 0 = PMWR/PMENB port disabled

bit 8 **PTRDEN:** Read/Write Strobe Port Enable bit
- 1 = PMRD/PMWR port enabled
- 0 = PMRD/PMWR port disabled

bit 7-6 **CSF<1:0>:** Chip Select Function bits(2)
- 11 = Reserved
- 10 = PMCS1 functions as Chip Select
- 01 = PMCS1 functions as PMA<14>
- 00 = PMCS1 functions as PMA<14>

bit 5 **ALP:** Address Latch Polarity bit(2)
- 1 = Active-high (PMALL and PMALH)
- 0 = Active-low ($\overline{\text{PMALL}}$ and $\overline{\text{PMALH}}$)

Note 1: When using 1:1 PBCLK divisor, the user’s software should not read/write the peripheral’s SFRs in the SYSCLK cycle immediately following the instruction that clears the module’s ON control bit.

2: These bits have no effect when their corresponding pins are used as address lines.

REGISTER 20-1: PMCON: PARALLEL PORT CONTROL REGISTER (CONTINUED)

bit 4 **Unimplemented:** Read as '0'

bit 3 **CS1P:** Chip Select 0 Polarity bit(2)

1 = Active-high (PMCS1)
0 = Active-low ($\overline{\text{PMCS1}}$)

bit 2 **Unimplemented:** Read as '0'

bit 1 **WRSP:** Write Strobe Polarity bit

For Slave Modes and Master mode 2 (MODE<1:0> = 00,01,10):

1 = Write strobe active-high (PMWR)
0 = Write strobe active-low ($\overline{\text{PMWR}}$)

For Master mode 1 (MODE<1:0> = 11):

1 = Enable strobe active-high (PMENB)
0 = Enable strobe active-low ($\overline{\text{PMENB}}$)

bit 0 **RDSP:** Read Strobe Polarity bit

For Slave modes and Master mode 2 (MODE<1:0> = 00,01,10):

1 = Read Strobe active-high (PMRD)
0 = Read Strobe active-low ($\overline{\text{PMRD}}$)

For Master mode 1 (MODE<1:0> = 11):

1 = Read/write strobe active-high (PMRD/$\overline{\text{PMWR}}$)
0 = Read/write strobe active-low ($\overline{\text{PMRD}}$/PMWR)

Note 1: When using 1:1 PBCLK divisor, the user's software should not read/write the peripheral's SFRs in the SYSCLK cycle immediately following the instruction that clears the module's ON control bit.

2: These bits have no effect when their corresponding pins are used as address lines.

© 2011-2016 Microchip Technology Inc.

REGISTER 20-2: PMMODE: PARALLEL PORT MODE REGISTER

Bit Range	Bit 31/23/15/7	Bit 30/22/14/6	Bit 29/21/13/5	Bit 28/20/12/4	Bit 27/19/11/3	Bit 26/18/10/2	Bit 25/17/9/1	Bit 24/16/8/0
31:24	U-0	U-0	U-0	U-0	U-0	U-0	U-0	U-0
	—	—	—	—	—	—	—	—
23:16	U-0	U-0	U-0	U-0	U-0	U-0	U-0	U-0
	—	—	—	—	—	—	—	—
15:8	R-0	R/W-0	R/W-0	R/W-0	R/W-0	U-0	R/W-0	R/W-0
	BUSY	IRQM<1:0>		INCM<1:0>		—	MODE<1:0>	
7:0	R/W-0	R/W-0	R/W-0	R/W-0	R/W-0	R/W-0	R/W-0	R/W-0
	WAITB<1:0>(1)		WAITM<3:0>(1)				WAITE<1:0>(1)	

Legend:			
R = Readable bit	W = Writable bit	U = Unimplemented bit, read as ‘0’	
-n = Value at POR	‘1’ = Bit is set	‘0’ = Bit is cleared	x = Bit is unknown

bit 31-16 **Unimplemented:** Read as ‘0’

bit 15 **BUSY:** Busy bit (Master mode only)
- 1 = Port is busy
- 0 = Port is not busy

bit 14-13 **IRQM<1:0>:** Interrupt Request Mode bits
- 11 = Reserved, do not use
- 10 = Interrupt generated when Read Buffer 3 is read or Write Buffer 3 is written (Buffered PSP mode) or on a read or write operation when PMA<1:0> =11 (Addressable Slave mode only)
- 01 = Interrupt generated at the end of the read/write cycle
- 00 = No Interrupt generated

bit 12-11 **INCM<1:0>:** Increment Mode bits
- 11 = Slave mode read and write buffers auto-increment (MODE<1:0> = 00 only)
- 10 = Decrement ADDR<10:2> and ADDR<14> by 1 every read/write cycle(2)
- 01 = Increment ADDR<10:2> and ADDR<14> by 1 every read/write cycle(2)
- 00 = No increment or decrement of address

bit 10 **Unimplemented:** Read as ‘0’

bit 9-8 **MODE<1:0>:** Parallel Port Mode Select bits
- 11 = Master mode 1 (PMCS1, PMRD/PMWR, PMENB, PMA<x:0>, and PMD<7:0>)
- 10 = Master mode 2 (PMCS1, PMRD, PMWR, PMA<x:0>, and PMD<7:0>)
- 01 = Enhanced Slave mode, control signals (PMRD, PMWR, PMCS1, PMD<7:0>, and PMA<1:0>)
- 00 = Legacy Parallel Slave Port, control signals (PMRD, PMWR, PMCS1, and PMD<7:0>)

bit 7-6 **WAITB<1:0>:** Data Setup to Read/Write Strobe Wait States bits(1)
- 11 = Data wait of 4 TPB; multiplexed address phase of 4 TPB
- 10 = Data wait of 3 TPB; multiplexed address phase of 3 TPB
- 01 = Data wait of 2 TPB; multiplexed address phase of 2 TPB
- 00 = Data wait of 1 TPB; multiplexed address phase of 1 TPB (default)

bit 5-2 **WAITM<3:0>:** Data Read/Write Strobe Wait States bits(1)
- 1111 = Wait of 16 TPB
- .
- .
- .
- 0001 = Wait of 2 TPB
- 0000 = Wait of 1 TPB (default)

Note 1: Whenever WAITM<3:0> = 0000, WAITB and WAITE bits are ignored and forced to 1 TPBCLK cycle for a write operation; WAITB = 1 TPBCLK cycle, WAITE = 0 TPBCLK cycles for a read operation.

2: Address bit A14 is not subject to auto-increment/decrement if configured as Chip Select CS1.

REGISTER 20-2: PMMODE: PARALLEL PORT MODE REGISTER (CONTINUED)

bit 1-0 **WAITE<1:0>:** Data Hold After Read/Write Strobe Wait States bits(1)

11 = Wait of 4 TPB
10 = Wait of 3 TPB
01 = Wait of 2 TPB
00 = Wait of 1 TPB (default)

For Read operations:
11 = Wait of 3 TPB
10 = Wait of 2 TPB
01 = Wait of 1 TPB
00 = Wait of 0 TPB (default)

Note 1: Whenever WAITM<3:0> = 0000, WAITB and WAITE bits are ignored and forced to 1 TPBCLK cycle for a write operation; WAITB = 1 TPBCLK cycle, WAITE = 0 TPBCLK cycles for a read operation.

2: Address bit A14 is not subject to auto-increment/decrement if configured as Chip Select CS1.

© 2011-2016 Microchip Technology Inc.

REGISTER 20-3: PMADDR: PARALLEL PORT ADDRESS REGISTER

Bit Range	Bit 31/23/15/7	Bit 30/22/14/6	Bit 29/21/13/5	Bit 28/20/12/4	Bit 27/19/11/3	Bit 26/18/10/2	Bit 25/17/9/1	Bit 24/16/8/0
31:24	U-0	U-0	U-0	U-0	U-0	U-0	U-0	U-0
	—	—	—	—	—	—	—	—
23:16	U-0	U-0	U-0	U-0	U-0	U-0	U-0	U-0
	—	—	—	—	—	—	—	—
15:8	U-0	R/W-0	U-0	U-0	U-0	R/W-0	R/W-0	R/W-0
	—	CS1(1) / ADDR14(2)	—	—	—	ADDR<10:8>		
7:0	R/W-0	R/W-0	R/W-0	R/W-0	R/W-0	R/W-0	R/W-0	R/W-0
	ADDR<7:0>							

Legend:			
R = Readable bit	W = Writable bit	U = Unimplemented bit, read as ‘0’	
-n = Value at POR	‘1’ = Bit is set	‘0’ = Bit is cleared	x = Bit is unknown

bit 31-15 **Unimplemented:** Read as ‘0’

bit 14 **CS1:** Chip Select 1 bit(1)
1 = Chip Select 1 is active
0 = Chip Select 1 is inactive

bit 14 **ADDR<14>:** Destination Address bit 14(2)

bit 13-11 **Unimplemented:** Read as ‘0’

bit 10-0 **ADDR<10:0>:** Destination Address bits

Note 1: When the CSF<1:0> bits (PMCON<7:6>) = 10.
2: When the CSF<1:0> bits (PMCON<7:6>) = 00 or 01.

REGISTER 20-4: PMAEN: PARALLEL PORT PIN ENABLE REGISTER

Bit Range	Bit 31/23/15/7	Bit 30/22/14/6	Bit 29/21/13/5	Bit 28/20/12/4	Bit 27/19/11/3	Bit 26/18/10/2	Bit 25/17/9/1	Bit 24/16/8/0
31:24	U-0	U-0	U-0	U-0	U-0	U-0	U-0	U-0
	—	—	—	—	—	—	—	—
23:16	U-0	U-0	U-0	U-0	U-0	U-0	U-0	U-0
	—	—	—	—	—	—	—	—
15:8	U-0	R/W-0	U-0	U-0	U-0	R/W-0	R/W-0	R/W-0
	—	PTEN14	—	—	—	PTEN<10:8>		
7:0	R/W-0	R/W-0	R/W-0	R/W-0	R/W-0	R/W-0	R/W-0	R/W-0
	PTEN<7:0>							

Legend:			
R = Readable bit	W = Writable bit	U = Unimplemented bit, read as ‘0’	
-n = Value at POR	‘1’ = Bit is set	‘0’ = Bit is cleared	x = Bit is unknown

bit 31-15 **Unimplemented:** Read as ‘0’

bit 15-14 **PTEN14:** PMCS1 Address Port Enable bits
- 1 = PMA14 functions as either PMA14 or PMCS1(1)
- 0 = PMA14 functions as port I/O

bit 13-11 **Unimplemented:** Read as ‘0’

bit 10-2 **PTEN<10:2>:** PMP Address Port Enable bits
- 1 = PMA<10:2> function as PMP address lines
- 0 = PMA<10:2> function as port I/O

bit 1-0 **PTEN<1:0>:** PMALH/PMALL Address Port Enable bits
- 1 = PMA1 and PMA0 function as either PMA<1:0> or PMALH and PMALL(2)
- 0 = PMA1 and PMA0 pads functions as port I/O

Note 1: The use of this pin as PMA14 or CS1 is selected by the CSF<1:0> bits in the PMCON register.

2: The use of these pins as PMA1/PMA0 or PMALH/PMALL depends on the Address/Data Multiplex mode selected by bits ADRMUX<1:0> in the PMCON register.

© 2011-2016 Microchip Technology Inc.

REGISTER 20-5: PMSTAT: PARALLEL PORT STATUS REGISTER (SLAVE MODES ONLY)

Bit Range	Bit 31/23/15/7	Bit 30/22/14/6	Bit 29/21/13/5	Bit 28/20/12/4	Bit 27/19/11/3	Bit 26/18/10/2	Bit 25/17/9/1	Bit 24/16/8/0
31:24	U-0	U-0	U-0	U-0	U-0	U-0	U-0	U-0
	—	—	—	—	—	—	—	—
23:16	U-0	U-0	U-0	U-0	U-0	U-0	U-0	U-0
	—	—	—	—	—	—	—	—
15:8	R-0	R/W-0, HSC	U-0	U-0	R-0	R-0	R-0	R-0
	IBF	IBOV	—	—	IB3F	IB2F	IB1F	IB0F
7:0	R-1	R/W-0, HSC	U-0	U-0	R-1	R-1	R-1	R-1
	OBE	OBUF	—	—	OB3E	OB2E	OB1E	OB0E

Legend:	HSC = Set by Hardware; Cleared by Software		
R = Readable bit	W = Writable bit	U = Unimplemented bit, read as ‘0’	
-n = Value at POR	‘1’ = Bit is set	‘0’ = Bit is cleared	x = Bit is unknown

bit 31-16 **Unimplemented:** Read as ‘0’

bit 15 **IBF:** Input Buffer Full Status bit
- 1 = All writable input buffer registers are full
- 0 = Some or all of the writable input buffer registers are empty

bit 14 **IBOV:** Input Buffer Overflow Status bit
- 1 = A write attempt to a full input byte buffer occurred (must be cleared in software)
- 0 = No overflow occurred

bit 13-12 **Unimplemented:** Read as ‘0’

bit 11-8 **IBxF:** Input Buffer ‘x’ Status Full bits
- 1 = Input Buffer contains data that has not been read (reading buffer will clear this bit)
- 0 = Input Buffer does not contain any unread data

bit 7 **OBE:** Output Buffer Empty Status bit
- 1 = All readable output buffer registers are empty
- 0 = Some or all of the readable output buffer registers are full

bit 6 **OBUF:** Output Buffer Underflow Status bit
- 1 = A read occurred from an empty output byte buffer (must be cleared in software)
- 0 = No underflow occurred

bit 5-4 **Unimplemented:** Read as ‘0’

bit 3-0 **OBxE:** Output Buffer ‘x’ Status Empty bits
- 1 = Output buffer is empty (writing data to the buffer will clear this bit)
- 0 = Output buffer contains data that has not been transmitted

NOTES:

© 2011-2016 Microchip Technology Inc.

21.0 REAL-TIME CLOCK AND CALENDAR (RTCC)

Note: This data sheet summarizes the features of the PIC32MX1XX/2XX 28/36/44-pin Family of devices. It is not intended to be a comprehensive reference source. To complement the information in this data sheet, refer to **Section 29. "Real-Time Clock and Calendar (RTCC)"** (DS60001125), which is available from the *Documentation > Reference Manual* section of the Microchip PIC32 web site (www.microchip.com/pic32).

The PIC32 RTCC module is intended for applications in which accurate time must be maintained for extended periods of time with minimal or no CPU intervention. Low-power optimization provides extended battery lifetime while keeping track of time.

Following are some of the key features of this module:

- Time: hours, minutes and seconds
- 24-hour format (military time)
- Visibility of one-half second period
- Provides calendar: day, date, month and year
- Alarm intervals are configurable for half of a second, one second, 10 seconds, one minute, 10 minutes, one hour, one day, one week, one month and one year
- Alarm repeat with decrementing counter
- Alarm with indefinite repeat: Chime
- Year range: 2000 to 2099
- Leap year correction
- BCD format for smaller firmware overhead
- Optimized for long-term battery operation
- Fractional second synchronization
- User calibration of the clock crystal frequency with auto-adjust
- Calibration range: ±0.66 seconds error per month
- Calibrates up to 260 ppm of crystal error
- Requirements: External 32.768 kHz clock crystal
- Alarm pulse or seconds clock output on RTCC pin

FIGURE 21-1: RTCC BLOCK DIAGRAM

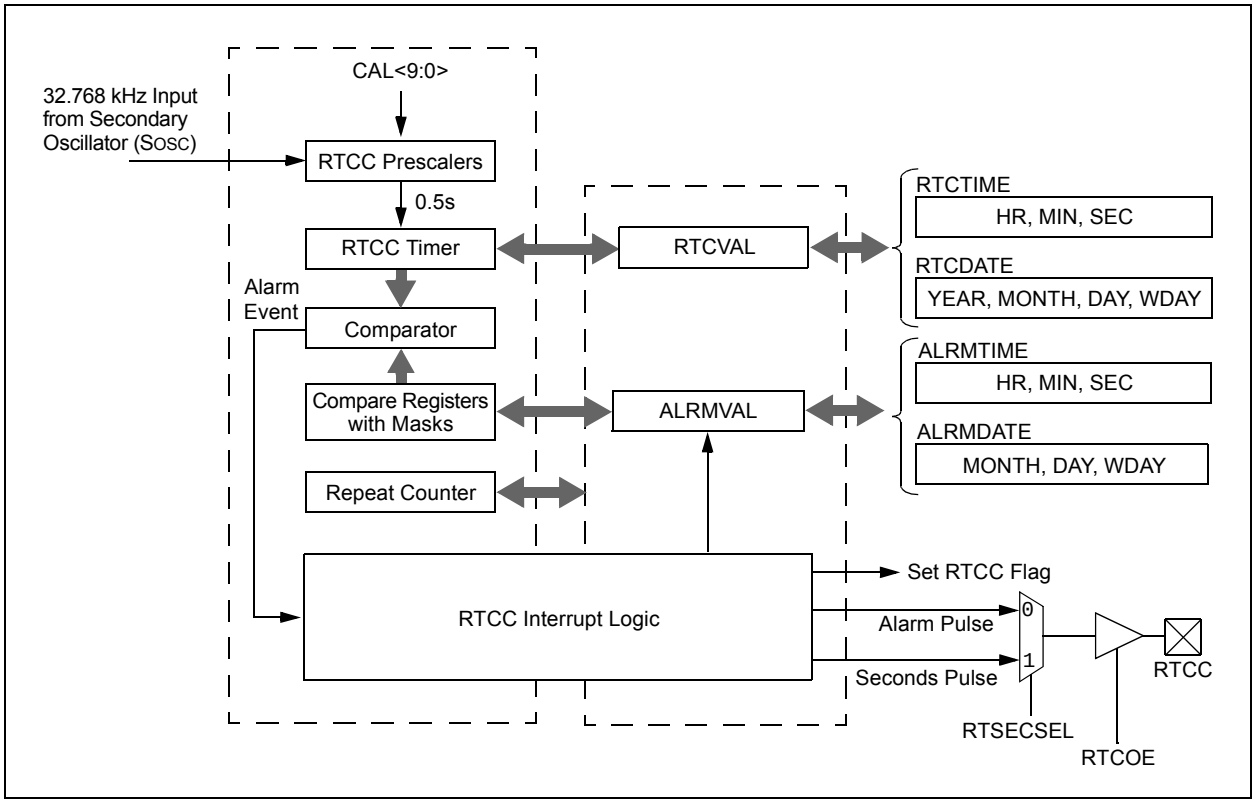

21.1 RTCC Control Registers

TABLE 21-1: RTCC REGISTER MAP

Virtual Address (BF80_#)	Register Name(1)	Bit Range	Bits 31/15	30/14	29/13	28/12	27/11	26/10	25/9	24/8	23/7	22/6	21/5	20/4	19/3	18/2	17/1	16/0	All Resets
0200	RTCCON	31:16	—	—	—	—	—	—	CAL<9:0>										0000
		15:0	ON	—	SIDL	—	—	—	—	—	RTSECSEL	RTCCLKON	—	—	RTCWREN	RTCSYNC	HALFSEC	RTCOE	0000
0210	RTCALRM	31:16	—	—	—	—	—	—	—	—	—	—	—	—	—	—	—	—	0000
		15:0	ALRMEN	CHIME	PIV	ALRMSYNC	AMASK<3:0>				ARPT<7:0>								0000
0220	RTCTIME	31:16	—	—	HR10<1:0>		HR01<3:0>				—	MIN10<2:0>			MIN01<3:0>				xxxx
		15:0	—	SEC10<2:0>			SEC01<3:0>				—	—	—	—	—	—	—	—	xx00
0230	RTCDATE	31:16	YEAR10<3:0>				YEAR01<3:0>				—	—	—	MONTH10	MONTH01<3:0>				xxxx
		15:0	—	—	DAY10<1:0>		DAY01<3:0>				—	—	—	—	—	WDAY01<2:0>			xx00
0240	ALRMTIME	31:16	—	—	HR10<1:0>		HR01<3:0>				—	MIN10<2:0>			MIN01<3:0>				xxxx
		15:0	—	SEC10<2:0>			SEC01<3:0>				—	—	—	—	—	—	—	—	xx00
0250	ALRMDATE	31:16	—	—	—	—	—	—	—	—	—	—	—	MONTH10	MONTH01<3:0>				00xx
		15:0	DAY10<3:0>				DAY01<3:0>				—	—	—	—	—	WDAY01<2:0>			xx0x

Legend: x = unknown value on Reset; — = unimplemented, read as ‘0’. Reset values are shown in hexadecimal.

Note 1: All registers in this table have corresponding CLR, SET and INV registers at its virtual address, plus an offset of 0x4, 0x8 and 0xC, respectively. See **Section 11.2 “CLR, SET and INV Registers”** for more information.

© 2011-2016 Microchip Technology Inc.

REGISTER 21-1: RTCCON: RTC CONTROL REGISTER

Bit Range	Bit 31/23/15/7	Bit 30/22/14/6	Bit 29/21/13/5	Bit 28/20/12/4	Bit 27/19/11/3	Bit 26/18/10/2	Bit 25/17/9/1	Bit 24/16/8/0
31:24	U-0	U-0	U-0	U-0	U-0	U-0	R/W-0	R/W-0
	—	—	—	—	—	—	CAL<9:8>	
23:16	R/W-0	R/W-0	R/W-0	R/W-0	R/W-0	R/W-0	R/W-0	R/W-0
	CAL<7:0>							
15:8	R/W-0	U-0	R/W-0	U-0	U-0	U-0	U-0	U-0
	ON(1,2)	—	SIDL	—	—	—	—	—
7:0	R/W-0	R-0	U-0	U-0	R/W-0	R-0	R-0	R/W-0
	RTSECSEL(3)	RTCCLKON	—	—	RTCWREN(4)	RTCSYNC	HALFSEC(5)	RTCOE

Legend:			
R = Readable bit	W = Writable bit	U = Unimplemented bit, read as ‘0’	
-n = Value at POR	‘1’ = Bit is set	‘0’ = Bit is cleared	x = Bit is unknown

bit 31-26 **Unimplemented:** Read as ‘0’

bit 25-16 **CAL<9:0>:** RTC Drift Calibration bits, which contain a signed 10-bit integer value
0111111111 = Maximum positive adjustment, adds 511 RTC clock pulses every one minute
•
•
•
0000000001 = Minimum positive adjustment, adds 1 RTC clock pulse every one minute
0000000000 = No adjustment
1111111111 = Minimum negative adjustment, subtracts 1 RTC clock pulse every one minute
•
•
•
1000000000 = Maximum negative adjustment, subtracts 512 clock pulses every one minute

bit 15 **ON:** RTCC On bit(1,2)
1 = RTCC module is enabled
0 = RTCC module is disabled

bit 14 **Unimplemented:** Read as ‘0’

bit 13 **SIDL:** Stop in Idle Mode bit
1 = Disables the PBCLK to the RTCC when the device enters Idle mode
0 = Continue normal operation when the device enters Idle mode

bit 12-8 **Unimplemented:** Read as ‘0’

bit 7 **RTSECSEL:** RTCC Seconds Clock Output Select bit(3)
1 = RTCC Seconds Clock is selected for the RTCC pin
0 = RTCC Alarm Pulse is selected for the RTCC pin

bit 6 **RTCCLKON:** RTCC Clock Enable Status bit
1 = RTCC Clock is actively running
0 = RTCC Clock is not running

Note 1: The ON bit is only writable when RTCWREN = 1.
2: When using the 1:1 PBCLK divisor, the user’s software should not read/write the peripheral’s SFRs in the SYSCLK cycle immediately following the instruction that clears the module’s ON bit.
3: Requires RTCOE = 1 (RTCCON<0>) for the output to be active.
4: The RTCWREN bit can be set only when the write sequence is enabled.
5: This bit is read-only. It is cleared to ‘0’ on a write to the seconds bit fields (RTCTIME<14:8>).

Note: This register is reset only on a Power-on Reset (POR).

REGISTER 21-1: RTCCON: RTC CONTROL REGISTER (CONTINUED)

bit 5-4 **Unimplemented:** Read as '0'

bit 3 **RTCWREN:** RTC Value Registers Write Enable bit(4)

1 = RTC Value registers can be written to by the user
0 = RTC Value registers are locked out from being written to by the user

bit 2 **RTCSYNC:** RTCC Value Registers Read Synchronization bit

1 = RTC Value registers can change while reading, due to a rollover ripple that results in an invalid data read If the register is read twice and results in the same data, the data can be assumed to be valid
0 = RTC Value registers can be read without concern about a rollover ripple

bit 1 **HALFSEC:** Half-Second Status bit(5)

1 = Second half period of a second
0 = First half period of a second

bit 0 **RTCOE:** RTCC Output Enable bit

1 = RTCC clock output enabled – clock presented onto an I/O
0 = RTCC clock output disabled

Note 1: The ON bit is only writable when RTCWREN = 1.

2: When using the 1:1 PBCLK divisor, the user's software should not read/write the peripheral's SFRs in the SYSCLK cycle immediately following the instruction that clears the module's ON bit.

3: Requires RTCOE = 1 (RTCCON<0>) for the output to be active.

4: The RTCWREN bit can be set only when the write sequence is enabled.

5: This bit is read-only. It is cleared to '0' on a write to the seconds bit fields (RTCTIME<14:8>).

Note: This register is reset only on a Power-on Reset (POR).

© 2011-2016 Microchip Technology Inc.

REGISTER 21-2: RTCALRM: RTC ALARM CONTROL REGISTER

Bit Range	Bit 31/23/15/7	Bit 30/22/14/6	Bit 29/21/13/5	Bit 28/20/12/4	Bit 27/19/11/3	Bit 26/18/10/2	Bit 25/17/9/1	Bit 24/16/8/0
31:24	U-0	U-0	U-0	U-0	U-0	U-0	U-0	U-0
	—	—	—	—	—	—	—	—
23:16	U-0	U-0	U-0	U-0	U-0	U-0	U-0	U-0
	—	—	—	—	—	—	—	—
15:8	R/W-0	R/W-0	R/W-0	R-0	R/W-0	R/W-0	R/W-0	R/W-0
	ALRMEN(1,2)	CHIME(2)	PIV(2)	ALRMSYNC(3)	AMASK<3:0>(2)			
7:0	R/W-0	R/W-0	R/W-0	R/W-0	R/W-0	R/W-0	R/W-0	R/W-0
	ARPT<7:0>(2)							

Legend:			
R = Readable bit	W = Writable bit	U = Unimplemented bit, read as ‘0’	
-n = Value at POR	‘1’ = Bit is set	‘0’ = Bit is cleared	x = Bit is unknown

bit 31-16 **Unimplemented:** Read as ‘0’

bit 15 **ALRMEN:** Alarm Enable bit(1,2)
- 1 = Alarm is enabled
- 0 = Alarm is disabled

bit 14 **CHIME:** Chime Enable bit(2)
- 1 = Chime is enabled – ARPT<7:0> is allowed to rollover from 0x00 to 0xFF
- 0 = Chime is disabled – ARPT<7:0> stops once it reaches 0x00

bit 13 **PIV:** Alarm Pulse Initial Value bit(2)

When ALRMEN = 0, PIV is writable and determines the initial value of the Alarm Pulse.
When ALRMEN = 1, PIV is read-only and returns the state of the Alarm Pulse.

bit 12 **ALRMSYNC:** Alarm Sync bit(3)
- 1 = ARPT<7:0> and ALRMEN may change as a result of a half second rollover during a read. The ARPT must be read repeatedly until the same value is read twice. This must be done since multiple bits may be changing, which are then synchronized to the PB clock domain
- 0 = ARPT<7:0> and ALRMEN can be read without concerns of rollover because the prescaler is > 32 RTC clocks away from a half-second rollover

bit 11-8 **AMASK<3:0>:** Alarm Mask Configuration bits(2)
- 0000 = Every half-second
- 0001 = Every second
- 0010 = Every 10 seconds
- 0011 = Every minute
- 0100 = Every 10 minutes
- 0101 = Every hour
- 0110 = Once a day
- 0111 = Once a week
- 1000 = Once a month
- 1001 = Once a year (except when configured for February 29, once every four years)
- 1010 = Reserved; do not use
- 1011 = Reserved; do not use
- 11xx = Reserved; do not use

Note 1: Hardware clears the ALRMEN bit anytime the alarm event occurs, when ARPT<7:0> = 00 and CHIME = 0.

2: This field should not be written when the RTCC ON bit = ‘1’ (RTCCON<15>) and ALRMSYNC = 1.

3: This assumes a CPU read will execute in less than 32 PBCLKs.

Note: This register is reset only on a Power-on Reset (POR).

REGISTER 21-2: RTCALRM: RTC ALARM CONTROL REGISTER (CONTINUED)

bit 7-0 **ARPT<7:0>:** Alarm Repeat Counter Value bits(2)

`11111111` = Alarm will trigger 256 times

.

.

.

`00000000` = Alarm will trigger one time

The counter decrements on any alarm event. The counter only rolls over from 0x00 to 0xFF if CHIME = `1`.

Note 1: Hardware clears the ALRMEN bit anytime the alarm event occurs, when ARPT<7:0> = `00` and CHIME = `0`.

2: This field should not be written when the RTCC ON bit = '`1`' (RTCCON<15>) and ALRMSYNC = `1`.

3: This assumes a CPU read will execute in less than 32 PBCLKs.

Note: This register is reset only on a Power-on Reset (POR).

© 2011-2016 Microchip Technology Inc.

REGISTER 21-3: RTCTIME: RTC TIME VALUE REGISTER

Bit Range	Bit 31/23/15/7	Bit 30/22/14/6	Bit 29/21/13/5	Bit 28/20/12/4	Bit 27/19/11/3	Bit 26/18/10/2	Bit 25/17/9/1	Bit 24/16/8/0
31:24	U-0	U-0	R/W-x	R/W-x	R/W-x	R/W-x	R/W-x	R/W-x
	—	—	HR10<1:0>		HR01<3:0>			
23:16	U-0	R/W-x	R/W-x	R/W-x	R/W-x	R/W-x	R/W-x	R/W-x
	—	MIN10<2:0>			MIN01<3:0>			
15:8	U-0	R/W-x	R/W-x	R/W-x	R/W-x	R/W-x	R/W-x	R/W-x
	—	SEC10<2:0>			SEC01<3:0>			
7:0	U-0	U-0	U-0	U-0	U-0	U-0	U-0	U-0
	—	—	—	—	—	—	—	—

Legend:			
R = Readable bit	W = Writable bit	U = Unimplemented bit, read as ‘0’	
-n = Value at POR	‘1’ = Bit is set	‘0’ = Bit is cleared	x = Bit is unknown

bit 31-30 **Unimplemented:** Read as ‘0’

bit 29-28 **HR10<1:0>:** Binary-Coded Decimal Value of Hours bits, 10s place digit; contains a value from 0 to 2

bit 27-24 **HR01<3:0>:** Binary-Coded Decimal Value of Hours bits, 1s place digit; contains a value from 0 to 9

bit 23 **Unimplemented:** Read as ‘0’

bit 22-20 **MIN10<2:0>:** Binary-Coded Decimal Value of Minutes bits, 10s place digit; contains a value from 0 to 5

bit 19-16 **MIN01<3:0>:** Binary-Coded Decimal Value of Minutes bits, 1s place digit; contains a value from 0 to 9

bit 15 **Unimplemented:** Read as ‘0’

bit 14-12 **SEC10<2:0>:** Binary-Coded Decimal Value of Seconds bits, 10s place digit; contains a value from 0 to 5

bit 11-8 **SEC01<3:0>:** Binary-Coded Decimal Value of Seconds bits, 1s place digit; contains a value from 0 to 9

bit 7-0 **Unimplemented:** Read as ‘0’

Note: This register is only writable when RTCWREN = 1 (RTCCON<3>).

REGISTER 21-4: RTCDATE: RTC DATE VALUE REGISTER

Bit Range	Bit 31/23/15/7	Bit 30/22/14/6	Bit 29/21/13/5	Bit 28/20/12/4	Bit 27/19/11/3	Bit 26/18/10/2	Bit 25/17/9/1	Bit 24/16/8/0
31:24	R/W-x	R/W-x	R/W-x	R/W-x	R/W-x	R/W-x	R/W-x	R/W-x
	YEAR10<3:0>				YEAR01<3:0>			
23:16	U-0	U-0	U-0	R/W-x	R/W-x	R/W-x	R/W-x	R/W-x
	—	—	—	MONTH10	MONTH01<3:0>			
15:8	U-0	U-0	R/W-x	R/W-x	R/W-x	R/W-x	R/W-x	R/W-x
	—	—	DAY10<1:0>		DAY01<3:0>			
7:0	U-0	U-0	U-0	U-0	U-0	R/W-x	R/W-x	R/W-x
	—	—	—	—	—	WDAY01<2:0>		

Legend:			
R = Readable bit	W = Writable bit	U = Unimplemented bit, read as ‘0’	
-n = Value at POR	‘1’ = Bit is set	‘0’ = Bit is cleared	x = Bit is unknown

bit 31-28 **YEAR10<3:0>:** Binary-Coded Decimal Value of Years bits, 10s place digit; contains a value from 0 to 9

bit 27-24 **YEAR01<3:0>:** Binary-Coded Decimal Value of Years bits, 1s place digit; contains a value from 0 to 9

bit 23-21 **Unimplemented:** Read as ‘0’

bit 20 **MONTH10:** Binary-Coded Decimal Value of Months bits, 10s place digit; contains a value of 0 or 1

bit 19-16 **MONTH01<3:0>:** Binary-Coded Decimal Value of Months bits, 1s place digit; contains a value from 0 to 9

bit 15-14 **Unimplemented:** Read as ‘0’

bit 13-12 **DAY10<1:0>:** Binary-Coded Decimal Value of Days bits, 10s place digit; contains a value of 0 to 3

bit 11-8 **DAY01<3:0>:** Binary-Coded Decimal Value of Days bits, 1s place digit; contains a value from 0 to 9

bit 7-3 **Unimplemented:** Read as ‘0’

bit 2-0 **WDAY01<2:0>:** Binary-Coded Decimal Value of Weekdays bits; contains a value from 0 to 6

Note: This register is only writable when RTCWREN = 1 (RTCCON<3>).

© 2011-2016 Microchip Technology Inc.

REGISTER 21-5: ALRMTIME: ALARM TIME VALUE REGISTER

Bit Range	Bit 31/23/15/7	Bit 30/22/14/6	Bit 29/21/13/5	Bit 28/20/12/4	Bit 27/19/11/3	Bit 26/18/10/2	Bit 25/17/9/1	Bit 24/16/8/0
31:24	U-0	U-0	R/W-x	R/W-x	R/W-x	R/W-x	R/W-x	R/W-x
	—	—	HR10<1:0>		HR01<3:0>			
23:16	U-0	R/W-x	R/W-x	R/W-x	R/W-x	R/W-x	R/W-x	R/W-x
	—	MIN10<2:0>			MIN01<3:0>			
15:8	U-0	R/W-x	R/W-x	R/W-x	R/W-x	R/W-x	R/W-x	R/W-x
	—	SEC10<2:0>			SEC01<3:0>			
7:0	U-0	U-0	U-0	U-0	U-0	U-0	U-0	U-0
	—	—	—	—	—	—	—	—

Legend:			
R = Readable bit	W = Writable bit	U = Unimplemented bit, read as ‘0’	
-n = Value at POR	‘1’ = Bit is set	‘0’ = Bit is cleared	x = Bit is unknown

bit 31-30 **Unimplemented:** Read as ‘0’

bit 29-28 **HR10<1:0>:** Binary Coded Decimal value of hours bits, 10s place digit; contains a value from 0 to 2

bit 27-24 **HR01<3:0>:** Binary Coded Decimal value of hours bits, 1s place digit; contains a value from 0 to 9

bit 23 **Unimplemented:** Read as ‘0’

bit 22-20 **MIN10<2:0>:** Binary Coded Decimal value of minutes bits, 10s place digit; contains a value from 0 to 5

bit 19-16 **MIN01<3:0>:** Binary Coded Decimal value of minutes bits, 1s place digit; contains a value from 0 to 9

bit 15 **Unimplemented:** Read as ‘0’

bit 14-12 **SEC10<2:0>:** Binary Coded Decimal value of seconds bits, 10s place digit; contains a value from 0 to 5

bit 11-8 **SEC01<3:0>:** Binary Coded Decimal value of seconds bits, 1s place digit; contains a value from 0 to 9

bit 7-0 **Unimplemented:** Read as ‘0’

REGISTER 21-6: ALRMDATE: ALARM DATE VALUE REGISTER

Bit Range	Bit 31/23/15/7	Bit 30/22/14/6	Bit 29/21/13/5	Bit 28/20/12/4	Bit 27/19/11/3	Bit 26/18/10/2	Bit 25/17/9/1	Bit 24/16/8/0
31:24	U-0	U-0	U-0	U-0	U-0	U-0	U-0	U-0
	—	—	—	—	—	—	—	—
23:16	U-0	U-0	U-0	R/W-x	R/W-x	R/W-x	R/W-x	R/W-x
	—	—	—	MONTH10	MONTH01<3:0>			
15:8	U-0	U-0	R/W-x	R/W-x	R/W-x	R/W-x	R/W-x	R/W-x
	—	—	DAY10<1:0>		DAY01<3:0>			
7:0	U-0	U-0	U-0	U-0	U-0	R/W-x	R/W-x	R/W-x
	—	—	—	—	—	WDAY01<2:0>		

Legend:			
R = Readable bit	W = Writable bit	U = Unimplemented bit, read as ‘0’	
-n = Value at POR	‘1’ = Bit is set	‘0’ = Bit is cleared	x = Bit is unknown

bit 31-21 **Unimplemented:** Read as ‘0’

bit 20 **MONTH10:** Binary Coded Decimal value of months bits, 10s place digit; contains a value of 0 or 1

bit 19-16 **MONTH01<3:0>:** Binary Coded Decimal value of months bits, 1s place digit; contains a value from 0 to 9

bit 15-14 **Unimplemented:** Read as ‘0’

bit 13-12 **DAY10<1:0>:** Binary Coded Decimal value of days bits, 10s place digit; contains a value from 0 to 3

bit 11-8 **DAY01<3:0>:** Binary Coded Decimal value of days bits, 1s place digit; contains a value from 0 to 9

bit 7-3 **Unimplemented:** Read as ‘0’

bit 2-0 **WDAY01<2:0>:** Binary Coded Decimal value of weekdays bits; contains a value from 0 to 6

© 2011-2016 Microchip Technology Inc.

22.0 10-BIT ANALOG-TO-DIGITAL CONVERTER (ADC)

Note: This data sheet summarizes the features of the PIC32MX1XX/2XX 28/36/44-pin Family of devices. It is not intended to be a comprehensive reference source. To complement the information in this data sheet, refer to **Section 17. "10-bit Analog-to-Digital Converter (ADC)"** (DS60001104), which is available from the *Documentation > Reference Manual* section of the Microchip PIC32 web site (www.microchip.com/pic32).

The 10-bit Analog-to-Digital Converter (ADC) includes the following features:

- Successive Approximation Register (SAR) conversion
- Up to 1 Msps conversion speed
- Up to 13 analog input pins
- External voltage reference input pins
- One unipolar, differential Sample and Hold Amplifier (SHA)
- Automatic Channel Scan mode
- Selectable conversion trigger source
- 16-word conversion result buffer
- Selectable buffer fill modes
- Eight conversion result format options
- Operation during Sleep and Idle modes

A block diagram of the 10-bit ADC is illustrated in Figure 22-1. Figure 22-2 illustrates a block diagram of the ADC conversion clock period. The 10-bit ADC has up to 13 analog input pins, designated AN0-AN12. In addition, there are two analog input pins for external voltage reference connections. These voltage reference inputs may be shared with other analog input pins and may be common to other analog module references.

FIGURE 22-1: ADC1 MODULE BLOCK DIAGRAM

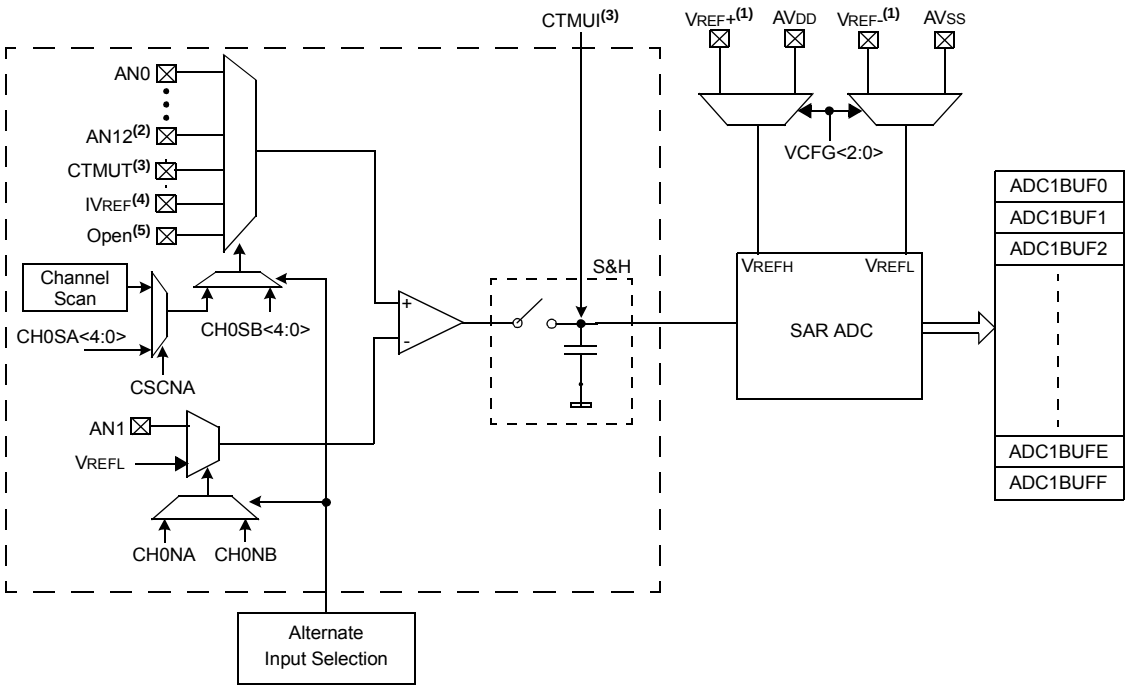

Note 1: VREF+ and VREF- inputs can be multiplexed with other analog inputs.

2: AN8 is only available on 44-pin devices. AN6, AN7, and AN12 are not available on 28-pin devices.

3: Connected to the CTMU module. See **Section 25.0 "Charge Time Measurement Unit (CTMU)"** for more information.

4: Internal precision voltage reference (1.2V).

5: This selection is only used with CTMU capacitive and time measurement.

FIGURE 22-2: ADC CONVERSION CLOCK PERIOD BLOCK DIAGRAM

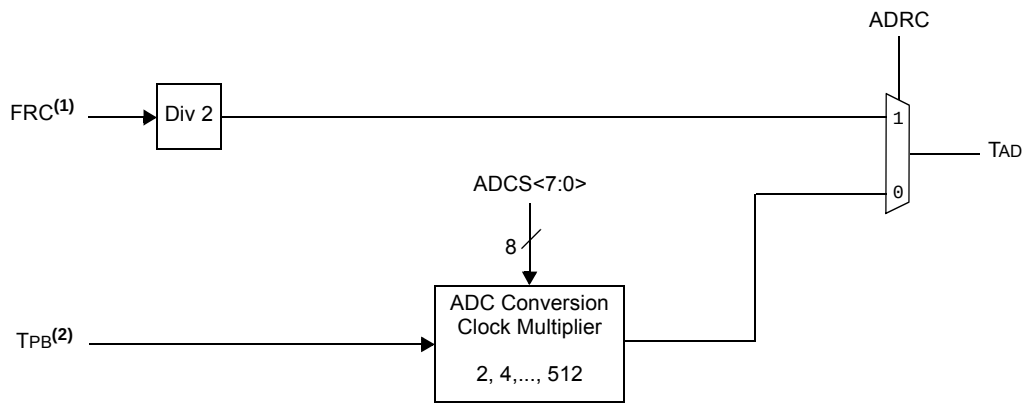

Note 1: See **Section 30.0 "Electrical Characteristics"** for the exact FRC clock value.

2: Refer to Figure 8-1 in **Section 8.0 "Oscillator Configuration"** for more information.

© 2011-2016 Microchip Technology Inc.

22.1 ADC Control Registers

TABLE 22-1: ADC REGISTER MAP

Virtual Address (BF80_#)	Register Name	Bit Range	Bits 31/15	30/14	29/13	28/12	27/11	26/10	25/9	24/8	23/7	22/6	21/5	20/4	19/3	18/2	17/1	16/0	All Resets
9000	AD1CON1(1)	31:16	—	—	—	—	—	—	—	—	—	—	—	—	—	—	—	—	0000
		15:0	ON	—	SIDL	—	—	FORM<2:0>			SSRC<2:0>			CLRASAM	—	ASAM	SAMP	DONE	0000
9010	AD1CON2(1)	31:16	—	—	—	—	—	—	—	—	—	—	—	—	—	—	—	—	0000
		15:0	VCFG<2:0>			OFFCAL	—	CSCNA	—	—	BUFS	—	SMPI<3:0>				BUFM	ALTS	0000
9020	AD1CON3(1)	31:16	—	—	—	—	—	—	—	—	—	—	—	—	—	—	—	—	0000
		15:0	ADRC	—	—	SAMC<4:0>					ADCS<7:0>								0000
9040	AD1CHS(1)	31:16	CH0NB	—	—	—	CH0SB<3:0>				CH0NA	—	—	—	CH0SA<3:0>				0000
		15:0	—	—	—	—	—	—	—	—	—	—	—	—	—	—	—	—	0000
9050	AD1CSSL(1)	31:16	—	—	—	—	—	—	—	—	—	—	—	—	—	—	—	—	0000
		15:0	CSSL15	CSSL14	CSSL13	CSSL12	CSSL11	CSSL10	CSSL9	CSSL8	CSSL7	CSSL6	CSSL5	CSSL4	CSSL3	CSSL2	CSSL1	CSSL0	0000
9070	ADC1BUF0	31:16	ADC Result Word 0 (ADC1BUF0<31:0>)																0000
		15:0																	0000
9080	ADC1BUF1	31:16	ADC Result Word 1 (ADC1BUF1<31:0>)																0000
		15:0																	0000
9090	ADC1BUF2	31:16	ADC Result Word 2 (ADC1BUF2<31:0>)																0000
		15:0																	0000
90A0	ADC1BUF3	31:16	ADC Result Word 3 (ADC1BUF3<31:0>)																0000
		15:0																	0000
90B0	ADC1BUF4	31:16	ADC Result Word 4 (ADC1BUF4<31:0>)																0000
		15:0																	0000
90C0	ADC1BUF5	31:16	ADC Result Word 5 (ADC1BUF5<31:0>)																0000
		15:0																	0000
90D0	ADC1BUF6	31:16	ADC Result Word 6 (ADC1BUF6<31:0>)																0000
		15:0																	0000
90E0	ADC1BUF7	31:16	ADC Result Word 7 (ADC1BUF7<31:0>)																0000
		15:0																	0000
90F0	ADC1BUF8	31:16	ADC Result Word 8 (ADC1BUF8<31:0>)																0000
		15:0																	0000
9100	ADC1BUF9	31:16	ADC Result Word 9 (ADC1BUF9<31:0>)																0000
		15:0																	0000
9110	ADC1BUFA	31:16	ADC Result Word A (ADC1BUFA<31:0>)																0000
		15:0																	0000

Legend: x = unknown value on Reset; — = unimplemented, read as '0'. Reset values are shown in hexadecimal.

Note 1: This register has corresponding CLR, SET and INV registers at its virtual address, plus offsets of 0x4, 0x8 and 0xC, respectively. See **Section 11.2 "CLR, SET and INV Registers"** for details.

© 2011-2016 Microchip Technology Inc.

TABLE 22-1: ADC REGISTER MAP (CONTINUED)

Virtual Address (BF80_#)	Register Name	Bit Range	Bits																All Resets
			31/15	30/14	29/13	28/12	27/11	26/10	25/9	24/8	23/7	22/6	21/5	20/4	19/3	18/2	17/1	16/0	
9120	ADC1BUFB	31:16	ADC Result Word B (ADC1BUFB<31:0>)																0000
		15:0																	0000
9130	ADC1BUFC	31:16	ADC Result Word C (ADC1BUFC<31:0>)																0000
		15:0																	0000
9140	ADC1BUFD	31:16	ADC Result Word D (ADC1BUFD<31:0>)																0000
		15:0																	0000
9150	ADC1BUFE	31:16	ADC Result Word E (ADC1BUFE<31:0>)																0000
		15:0																	0000
9160	ADC1BUFF	31:16	ADC Result Word F (ADC1BUFF<31:0>)																0000
		15:0																	0000

Legend: x = unknown value on Reset; — = unimplemented, read as ‘0’. Reset values are shown in hexadecimal.

Note 1: This register has corresponding CLR, SET and INV registers at its virtual address, plus offsets of 0x4, 0x8 and 0xC, respectively. See **Section 11.2 “CLR, SET and INV Registers”** for details.

© 2011-2016 Microchip Technology Inc.

REGISTER 22-1: AD1CON1: ADC CONTROL REGISTER 1

Bit Range	Bit 31/23/15/7	Bit 30/22/14/6	Bit 29/21/13/5	Bit 28/20/12/4	Bit 27/19/11/3	Bit 26/18/10/2	Bit 25/17/9/1	Bit 24/16/8/0
31:24	U-0	U-0	U-0	U-0	U-0	U-0	U-0	U-0
	—	—	—	—	—	—	—	—
23:16	U-0	U-0	U-0	U-0	U-0	U-0	U-0	U-0
	—	—	—	—	—	—	—	—
15:8	R/W-0	U-0	R/W-0	U-0	U-0	R/W-0	R/W-0	R/W-0
	ON(1)	—	SIDL	—	—	FORM<2:0>		
7:0	R/W-0	R/W-0	R/W-0	R/W-0	U-0	R/W-0	R/W-0, HSC	R/C-0, HSC
	SSRC<2:0>			CLRASAM	—	ASAM	SAMP(2)	DONE(3)

Legend:			
R = Readable bit	W = Writable bit	U = Unimplemented bit, read as ‘0’	
-n = Value at POR	‘1’ = Bit is set	‘0’ = Bit is cleared	x = Bit is unknown

bit 31-16 **Unimplemented:** Read as ‘0’

bit 15 **ON:** ADC Operating Mode bit(1)
- 1 = ADC module is operating
- 0 = ADC module is not operating

bit 14 **Unimplemented:** Read as ‘0’

bit 13 **SIDL:** Stop in Idle Mode bit
- 1 = Discontinue module operation when device enters Idle mode
- 0 = Continue module operation when the device enters Idle mode

bit 12-11 **Unimplemented:** Read as ‘0’

bit 10-8 **FORM<2:0>:** Data Output Format bits
- 111 = Signed Fractional 32-bit (DOUT = sddd dddd dd00 0000 0000 0000 0000)
- 110 = Fractional 32-bit (DOUT = dddd dddd dd00 0000 0000 0000 0000 0000)
- 101 = Signed Integer 32-bit (DOUT = ssss ssss ssss ssss ssss sssd dddd dddd)
- 100 = Integer 32-bit (DOUT = 0000 0000 0000 0000 0000 00dd dddd dddd)
- 011 = Signed Fractional 16-bit (DOUT = 0000 0000 0000 0000 sddd dddd dd00 0000)
- 010 = Fractional 16-bit (DOUT = 0000 0000 0000 0000 dddd dddd dd00 0000)
- 001 = Signed Integer 16-bit (DOUT = 0000 0000 0000 0000 ssss sssd dddd dddd)
- 000 =Integer 16-bit (DOUT = 0000 0000 0000 0000 0000 00dd dddd dddd)

bit 7-5 **SSRC<2:0>:** Conversion Trigger Source Select bits
- 111 = Internal counter ends sampling and starts conversion (auto convert)
- 110 = Reserved
- 101 = Reserved
- 100 = Reserved
- 011 = CTMU ends sampling and starts conversion
- 010 = Timer 3 period match ends sampling and starts conversion
- 001 = Active transition on INT0 pin ends sampling and starts conversion
- 000 = Clearing SAMP bit ends sampling and starts conversion

Note 1: When using 1:1 PBCLK divisor, the user’s software should not read/write the peripheral’s SFRs in the SYSCLK cycle immediately following the instruction that clears the module’s ON bit.

2: If ASAM = 0, software can write a ‘1’ to start sampling. This bit is automatically set by hardware if ASAM = 1. If SSRC = 0, software can write a ‘0’ to end sampling and start conversion. If SSRC ≠ ‘0’, this bit is automatically cleared by hardware to end sampling and start conversion.

3: This bit is automatically set by hardware when analog-to-digital conversion is complete. Software can write a ‘0’ to clear this bit (a write of ‘1’ is not allowed). Clearing this bit does not affect any operation already in progress. This bit is automatically cleared by hardware at the start of a new conversion.

REGISTER 22-1: AD1CON1: ADC CONTROL REGISTER 1 (CONTINUED)

bit 4 **CLRASAM:** Stop Conversion Sequence bit (when the first ADC interrupt is generated)
1 = Stop conversions when the first ADC interrupt is generated. Hardware clears the ASAM bit when the ADC interrupt is generated.
0 = Normal operation, buffer contents will be overwritten by the next conversion sequence

bit 3 **Unimplemented:** Read as '0'

bit 2 **ASAM:** ADC Sample Auto-Start bit
1 = Sampling begins immediately after last conversion completes; SAMP bit is automatically set.
0 = Sampling begins when SAMP bit is set

bit 1 **SAMP:** ADC Sample Enable bit(2)
1 = The ADC sample and hold amplifier is sampling
0 = The ADC sample/hold amplifier is holding
When ASAM = 0, writing '1' to this bit starts sampling.
When SSRC = 000, writing '0' to this bit will end sampling and start conversion.

bit 0 **DONE:** Analog-to-Digital Conversion Status bit(3)
1 = Analog-to-digital conversion is done
0 = Analog-to-digital conversion is not done or has not started
Clearing this bit will not affect any operation in progress.

Note 1: When using 1:1 PBCLK divisor, the user's software should not read/write the peripheral's SFRs in the SYSCLK cycle immediately following the instruction that clears the module's ON bit.

2: If ASAM = 0, software can write a '1' to start sampling. This bit is automatically set by hardware if ASAM = 1. If SSRC = 0, software can write a '0' to end sampling and start conversion. If SSRC ≠ '0', this bit is automatically cleared by hardware to end sampling and start conversion.

3: This bit is automatically set by hardware when analog-to-digital conversion is complete. Software can write a '0' to clear this bit (a write of '1' is not allowed). Clearing this bit does not affect any operation already in progress. This bit is automatically cleared by hardware at the start of a new conversion.

© 2011-2016 Microchip Technology Inc.

REGISTER 22-2: AD1CON2: ADC CONTROL REGISTER 2

Bit Range	Bit 31/23/15/7	Bit 30/22/14/6	Bit 29/21/13/5	Bit 28/20/12/4	Bit 27/19/11/3	Bit 26/18/10/2	Bit 25/17/9/1	Bit 24/16/8/0
31:24	U-0	U-0	U-0	U-0	U-0	U-0	U-0	U-0
	—	—	—	—	—	—	—	—
23:16	U-0	U-0	U-0	U-0	U-0	U-0	U-0	U-0
	—	—	—	—	—	—	—	—
15:8	R/W-0	R/W-0	R/W-0	R/W-0	U-0	R/W-0	U-0	U-0
	VCFG<2:0>			OFFCAL	—	CSCNA	—	—
7:0	R-0	U-0	R/W-0	R/W-0	R/W-0	R/W-0	R/W-0	R/W-0
	BUFS	—	SMPI<3:0>				BUFM	ALTS

Legend:			
R = Readable bit	W = Writable bit	U = Unimplemented bit, read as ‘0’	
-n = Value at POR	‘1’ = Bit is set	‘0’ = Bit is cleared	x = Bit is unknown

bit 31-16 **Unimplemented:** Read as ‘0’

bit 15-13 **VCFG<2:0>:** Voltage Reference Configuration bits

	VREFH	VREFL
000	AVDD	AVss
001	External VREF+ pin	AVSS
010	AVDD	External VREF- pin
011	External VREF+ pin	External VREF- pin
1xx	AVDD	AVSS

bit 12 **OFFCAL:** Input Offset Calibration Mode Select bit
1 = Enable Offset Calibration mode
Positive and negative inputs of the sample and hold amplifier are connected to VREFL
0 = Disable Offset Calibration mode
The inputs to the sample and hold amplifier are controlled by AD1CHS or AD1CSSL

bit 11 **Unimplemented:** Read as ‘0’

bit 10 **CSCNA:** Input Scan Select bit
1 = Scan inputs
0 = Do not scan inputs

bit 9-8 **Unimplemented:** Read as ‘0’

bit 7 **BUFS:** Buffer Fill Status bit
Only valid when BUFM = 1.
1 = ADC is currently filling buffer 0x8-0xF, user should access data in 0x0-0x7
0 = ADC is currently filling buffer 0x0-0x7, user should access data in 0x8-0xF

bit 6 **Unimplemented:** Read as ‘0’

bit 5-2 **SMPI<3:0>:** Sample/Convert Sequences Per Interrupt Selection bits
1111 = Interrupts at the completion of conversion for each 16th sample/convert sequence
1110 = Interrupts at the completion of conversion for each 15th sample/convert sequence
.
.
.
0001 = Interrupts at the completion of conversion for each 2nd sample/convert sequence
0000 = Interrupts at the completion of conversion for each sample/convert sequence

bit 1 **BUFM:** ADC Result Buffer Mode Select bit
1 = Buffer configured as two 8-word buffers, ADC1BUF7-ADC1BUF0, ADC1BUFF-ADCBUF8
0 = Buffer configured as one 16-word buffer ADC1BUFF-ADC1BUF0

bit 0 **ALTS:** Alternate Input Sample Mode Select bit
1 = Uses Sample A input multiplexer settings for first sample, then alternates between Sample B and Sample A input multiplexer settings for all subsequent samples
0 = Always use Sample A input multiplexer settings

REGISTER 22-3: AD1CON3: ADC CONTROL REGISTER 3

Bit Range	Bit 31/23/15/7	Bit 30/22/14/6	Bit 29/21/13/5	Bit 28/20/12/4	Bit 27/19/11/3	Bit 26/18/10/2	Bit 25/17/9/1	Bit 24/16/8/0
31:24	U-0	U-0	U-0	U-0	U-0	U-0	U-0	U-0
	—	—	—	—	—	—	—	—
23:16	U-0	U-0	U-0	U-0	U-0	U-0	U-0	U-0
	—	—	—	—	—	—	—	—
15:8	R/W-0	U-0	U-0	R/W-0	R/W-0	R/W-0	R/W-0	R/W-0
	ADRC	—	—	SAMC<4:0>(1)				
7:0	R/W-0	R/W-0	R/W-0	R/W-0	R/W-0	R/W-0	R/W	R/W-0
	ADCS<7:0>(2)							

Legend:			
R = Readable bit	W = Writable bit	U = Unimplemented bit, read as ‘0’	
-n = Value at POR	‘1’ = Bit is set	‘0’ = Bit is cleared	x = Bit is unknown

bit 31-16 **Unimplemented:** Read as ‘0’

bit 15 **ADRC:** ADC Conversion Clock Source bit
1 = Clock derived from FRC
0 = Clock derived from Peripheral Bus Clock (PBCLK)

bit 14-13 **Unimplemented:** Read as ‘0’

bit 12-8 **SAMC<4:0>:** Auto-Sample Time bits(1)
11111 = 31 TAD
•
•
•
00001 = 1 TAD
00000 = 0 TAD (Not allowed)

bit 7-0 **ADCS<7:0>:** ADC Conversion Clock Select bits(2)
11111111 = TPB • 2 • (ADCS<7:0> + 1) = 512 • TPB = TAD
•
•
•
00000001 = TPB • 2 • (ADCS<7:0> + 1) = 4 • TPB = TAD
00000000 = TPB • 2 • (ADCS<7:0> + 1) = 2 • TPB = TAD

Note 1: This bit is only used if the SSRC<2:0> bits (AD1CON1<7:5>) = 111.
2: This bit is not used if the ADRC (AD1CON3<15>) bit = 1.

© 2011-2016 Microchip Technology Inc.

REGISTER 22-4: AD1CHS: ADC INPUT SELECT REGISTER

Bit Range	Bit 31/23/15/7	Bit 30/22/14/6	Bit 29/21/13/5	Bit 28/20/12/4	Bit 27/19/11/3	Bit 26/18/10/2	Bit 25/17/9/1	Bit 24/16/8/0
31:24	R/W-0	U-0	U-0	U-0	R/W-0	R/W-0	R/W-0	R/W-0
	CH0NB	—	—	—	CH0SB<3:0>			
23:16	R/W-0	U-0	U-0	U-0	R/W-0	R/W-0	R/W-0	R/W-0
	CH0NA	—	—	—	CH0SA<3:0>			
15:8	U-0	U-0	U-0	U-0	U-0	U-0	U-0	U-0
	—	—	—	—	—	—	—	—
7:0	U-0	U-0	U-0	U-0	U-0	U-0	U-0	U-0
	—	—	—	—	—	—	—	—

Legend:			
R = Readable bit	W = Writable bit	U = Unimplemented bit, read as ‘0’	
-n = Value at POR	‘1’ = Bit is set	‘0’ = Bit is cleared	x = Bit is unknown

bit 31 **CH0NB:** Negative Input Select bit for Sample B
1 = Channel 0 negative input is AN1
0 = Channel 0 negative input is VREFL

bit 30-28 **Unimplemented:** Read as ‘0’

bit 27-24 **CH0SB<3:0>:** Positive Input Select bits for Sample B
1111 = Channel 0 positive input is Open(1)
1110 = Channel 0 positive input is IVREF(2)
1101 = Channel 0 positive input is CTMU temperature sensor (CTMUT)(3)
1100 = Channel 0 positive input is AN12(4)
•
•
•
0001 = Channel 0 positive input is AN1
0000 = Channel 0 positive input is AN0

bit 23 **CH0NA:** Negative Input Select bit for Sample A Multiplexer Setting(2)
1 = Channel 0 negative input is AN1
0 = Channel 0 negative input is VREFL

bit 22-20 **Unimplemented:** Read as ‘0’

bit 19-16 **CH0SA<3:0>:** Positive Input Select bits for Sample A Multiplexer Setting
1111 = Channel 0 positive input is Open(1)
1110 = Channel 0 positive input is IVREF(2)
1101 = Channel 0 positive input is CTMU temperature (CTMUT)(3)
1100 = Channel 0 positive input is AN12(4)
•
•
•
0001 = Channel 0 positive input is AN1
0000 = Channel 0 positive input is AN0

bit 15-0 **Unimplemented:** Read as ‘0’

Note 1: This selection is only used with CTMU capacitive and time measurement.
2: See **Section 24.0 “Comparator Voltage Reference (CVREF)”** for more information.
3: See **Section 25.0 “Charge Time Measurement Unit (CTMU)”** for more information.
4: AN12 is only available on 44-pin devices. AN6-AN8 are not available on 28-pin devices.

REGISTER 22-5: AD1CSSL: ADC INPUT SCAN SELECT REGISTER

Bit Range	Bit 31/23/15/7	Bit 30/22/14/6	Bit 29/21/13/5	Bit 28/20/12/4	Bit 27/19/11/3	Bit 26/18/10/2	Bit 25/17/9/1	Bit 24/16/8/0
31:24	U-0	U-0	U-0	U-0	U-0	U-0	U-0	U-0
	—	—	—	—	—	—	—	—
23:16	U-0	U-0	U-0	U-0	U-0	U-0	U-0	U-0
	—	—	—	—	—	—	—	—
15:8	R/W-0	R/W-0	R/W-0	R/W-0	R/W-0	R/W-0	R/W-0	R/W-0
	CSSL15	CSSL14	CSSL13	CSSL12	CSSL11	CSSL10	CSSL9	CSSL8
7:0	R/W-0	R/W-0	R/W-0	R/W-0	R/W-0	R/W-0	R/W-0	R/W-0
	CSSL7	CSSL6	CSSL5	CSSL4	CSSL3	CSSL2	CSSL1	CSSL0

Legend:			
R = Readable bit	W = Writable bit	U = Unimplemented bit, read as ‘0’	
-n = Value at POR	‘1’ = Bit is set	‘0’ = Bit is cleared	x = Bit is unknown

bit 31-16 **Unimplemented:** Read as ‘0’

bit 15-0 **CSSL<15:0>:** ADC Input Pin Scan Selection bits(1,2)

1 = Select ANx for input scan

0 = Skip ANx for input scan

Note 1: CSSL = ANx, where ‘x’ = 0-12; CSSL13 selects CTMU input for scan; CSSL14 selects IVREF for scan; CSSL15 selects VSS for scan.

2: On devices with less than 13 analog inputs, all CSSLx bits can be selected; however, inputs selected for scan without a corresponding input on the device will convert to VREFL.

© 2011-2016 Microchip Technology Inc.

23.0 COMPARATOR

Note: This data sheet summarizes the features of the PIC32MX1XX/2XX 28/36/44-pin Family of devices. It is not intended to be a comprehensive reference source. To complement the information in this data sheet, refer to **Section 19. "Comparator"** (DS60001110), which is available from the *Documentation > Reference Manual* section of the Microchip PIC32 web site (www.microchip.com/pic32).

The Analog Comparator module contains three comparators that can be configured in a variety of ways.

Following are some of the key features of this module:

- Selectable inputs available include:
  - Analog inputs multiplexed with I/O pins
  - On-chip internal absolute voltage reference (IVREF)
  - Comparator voltage reference (CVREF)
- Outputs can be Inverted
- Selectable interrupt generation

A block diagram of the comparator module is provided in Figure 23-1.

FIGURE 23-1: COMPARATOR BLOCK DIAGRAM

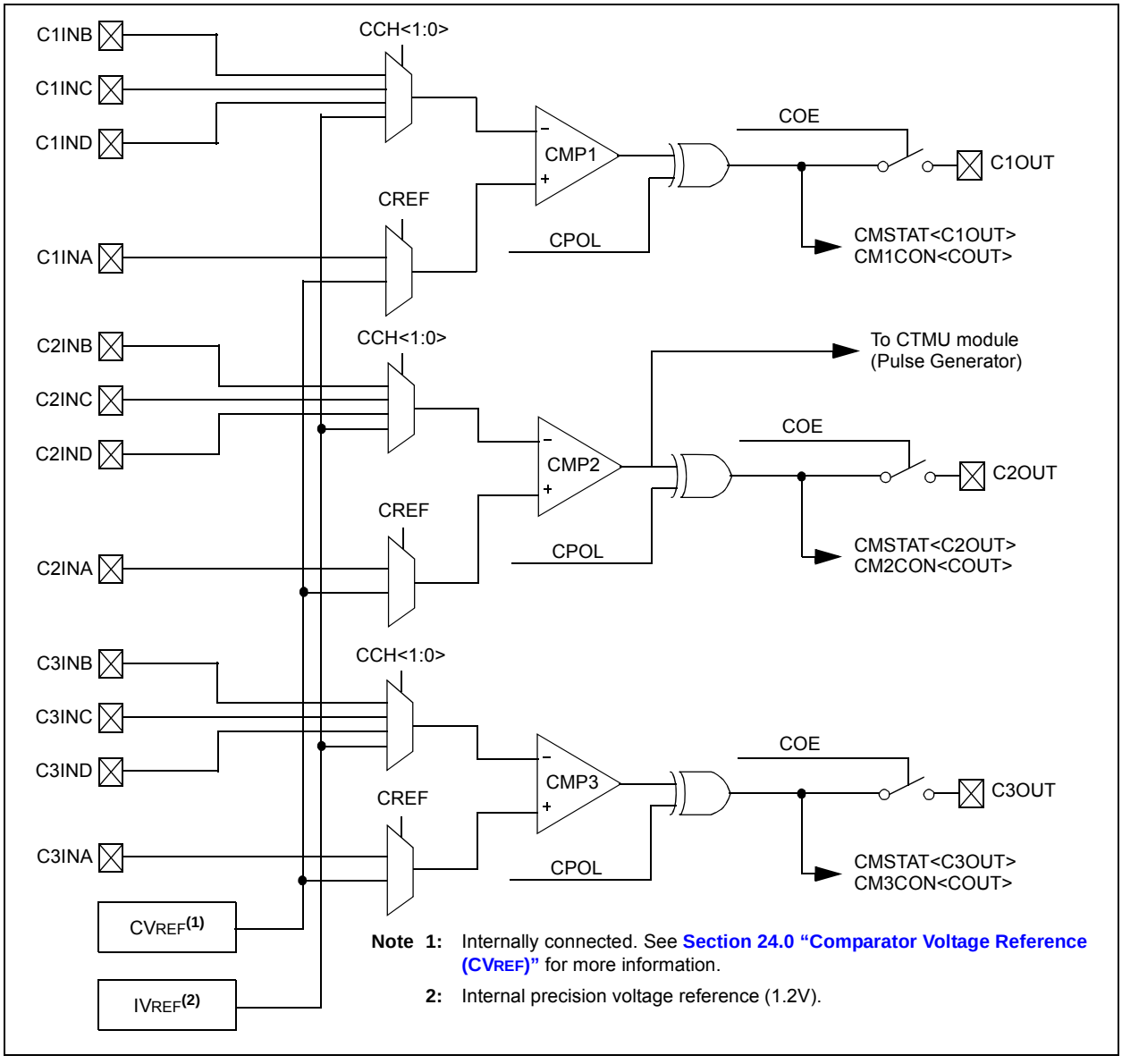

Note 1: Internally connected. See **Section 24.0 "Comparator Voltage Reference (CVREF)"** for more information.

2: Internal precision voltage reference (1.2V).

23.1 Comparator Control Registers

TABLE 23-1: COMPARATOR REGISTER MAP

Virtual Address (BF80_#)	Register Name(1)	Bit Range	Bits																All Resets
			31/15	30/14	29/13	28/12	27/11	26/10	25/9	24/8	23/7	22/6	21/5	20/4	19/3	18/2	17/1	16/0	
A000	CM1CON	31:16	—	—	—	—	—	—	—	—	—	—	—	—	—	—	—	—	0000
		15:0	ON	COE	CPOL	—	—	—	—	COUT	EVPOL<1:0>		—	CREF	—	—	CCH<1:0>		00C3
A010	CM2CON	31:16	—	—	—	—	—	—	—	—	—	—	—	—	—	—	—	—	0000
		15:0	ON	COE	CPOL	—	—	—	—	COUT	EVPOL<1:0>		—	CREF	—	—	CCH<1:0>		00C3
A020	CM3CON	31:16	—	—	—	—	—	—	—	—	—	—	—	—	—	—	—	—	0000
		15:0	ON	COE	CPOL	—	—	—	—	COUT	EVPOL<1:0>		—	CREF	—	—	CCH<1:0>		00C3
A060	CMSTAT	31:16	—	—	—	—	—	—	—	—	—	—	—	—	—	—	—	—	0000
		15:0	—	—	SIDL	—	—	—	—	—	—	—	—	—	—	C3OUT	C2OUT	C1OUT	0000

Legend: x = unknown value on Reset; — = unimplemented, read as ‘0’. Reset values are shown in hexadecimal.

Note 1: All registers in this table have corresponding CLR, SET and INV registers at their virtual addresses, plus offsets of 0x4, 0x8 and 0xC, respectively. See **Section 11.2 “CLR, SET and INV Registers”** for more information.

© 2011-2016 Microchip Technology Inc.

REGISTER 23-1: CMXCON: COMPARATOR CONTROL REGISTER

Bit Range	Bit 31/23/15/7	Bit 30/22/14/6	Bit 29/21/13/5	Bit 28/20/12/4	Bit 27/19/11/3	Bit 26/18/10/2	Bit 25/17/9/1	Bit 24/16/8/0
31:24	U-0	U-0	U-0	U-0	U-0	U-0	U-0	U-0
	—	—	—	—	—	—	—	—
23:16	U-0	U-0	U-0	U-0	U-0	U-0	U-0	U-0
	—	—	—	—	—	—	—	—
15:8	R/W-0	R/W-0	R/W-0	U-0	U-0	U-0	U-0	R-0
	ON(1)	COE	CPOL(2)	—	—	—	—	COUT
7:0	R/W-1	R/W-1	U-0	R/W-0	U-0	U-0	R/W-1	R/W-1
	EVPOL<1:0>		—	CREF	—	—	CCH<1:0>	

Legend:			
R = Readable bit	W = Writable bit	U = Unimplemented bit, read as ‘0’	
-n = Value at POR	‘1’ = Bit is set	‘0’ = Bit is cleared	x = Bit is unknown

bit 31-16 **Unimplemented:** Read as ‘0’

bit 15 **ON:** Comparator ON bit(1)
- 1 = Module is enabled. Setting this bit does not affect the other bits in this register
- 0 = Module is disabled and does not consume current. Clearing this bit does not affect the other bits in this register

bit 14 **COE:** Comparator Output Enable bit
- 1 = Comparator output is driven on the output CxOUT pin
- 0 = Comparator output is not driven on the output CxOUT pin

bit 13 **CPOL:** Comparator Output Inversion bit(2)
- 1 = Output is inverted
- 0 = Output is not inverted

bit 12-9 **Unimplemented:** Read as ‘0’

bit 8 **COUT:** Comparator Output bit
- 1 = Output of the Comparator is a ‘1’
- 0 = Output of the Comparator is a ‘0’

bit 7-6 **EVPOL<1:0>:** Interrupt Event Polarity Select bits
- 11 = Comparator interrupt is generated on a low-to-high or high-to-low transition of the comparator output
- 10 = Comparator interrupt is generated on a high-to-low transition of the comparator output
- 01 = Comparator interrupt is generated on a low-to-high transition of the comparator output
- 00 = Comparator interrupt generation is disabled

bit 5 **Unimplemented:** Read as ‘0’

bit 4 **CREF:** Comparator Positive Input Configure bit
- 1 = Comparator non-inverting input is connected to the internal CVREF
- 0 = Comparator non-inverting input is connected to the CxINA pin

bit 3-2 **Unimplemented:** Read as ‘0’

bit 1-0 **CCH<1:0>:** Comparator Negative Input Select bits for Comparator
- 11 = Comparator inverting input is connected to the IVREF
- 10 = Comparator inverting input is connected to the CxIND pin
- 01 = Comparator inverting input is connected to the CxINC pin
- 00 = Comparator inverting input is connected to the CxINB pin

Note 1: When using the 1:1 PBCLK divisor, the user’s software should not read/write the peripheral’s SFRs in the SYSCLK cycle immediately following the instruction that clears the module’s ON bit.

2: Setting this bit will invert the signal to the comparator interrupt generator as well. This will result in an interrupt being generated on the opposite edge from the one selected by EVPOL<1:0>.

REGISTER 23-2: CMSTAT: COMPARATOR STATUS REGISTER

Bit Range	Bit 31/23/15/7	Bit 30/22/14/6	Bit 29/21/13/5	Bit 28/20/12/4	Bit 27/19/11/3	Bit 26/18/10/2	Bit 25/17/9/1	Bit 24/16/8/0
31:24	U-0	U-0	U-0	U-0	U-0	U-0	U-0	U-0
	—	—	—	—	—	—	—	—
23:16	U-0	U-0	U-0	U-0	U-0	U-0	U-0	U-0
	—	—	—	—	—	—	—	—
15:8	U-0	U-0	R/W-0	U-0	U-0	U-0	U-0	U-0
	—	—	SIDL	—	—	—	—	—
7:0	U-0	U-0	U-0	U-0	U-0	R-0	R-0	R-0
	—	—	—	—	—	C3OUT	C2OUT	C1OUT

Legend:			
R = Readable bit	W = Writable bit	U = Unimplemented bit, read as ‘0’	
-n = Value at POR	‘1’ = Bit is set	‘0’ = Bit is cleared	x = Bit is unknown

bit 31-14 **Unimplemented:** Read as ‘0’

bit 13 **SIDL:** Stop in Idle Control bit
1 = All Comparator modules are disabled when the device enters Idle mode
0 = All Comparator modules continue to operate when the device enters Idle mode

bit 12-3 **Unimplemented:** Read as ‘0’

bit 2 **C3OUT:** Comparator Output bit
1 = Output of Comparator 3 is a ‘1’
0 = Output of Comparator 3 is a ‘0’

bit 1 **C2OUT:** Comparator Output bit
1 = Output of Comparator 2 is a ‘1’
0 = Output of Comparator 2 is a ‘0’

bit 0 **C1OUT:** Comparator Output bit
1 = Output of Comparator 1 is a ‘1’
0 = Output of Comparator 1 is a ‘0’

© 2011-2016 Microchip Technology Inc.

24.0 COMPARATOR VOLTAGE REFERENCE (CVREF)

Note: This data sheet summarizes the features of the PIC32MX1XX/2XX 28/36/44-pin Family of devices. It is not intended to be a comprehensive reference source. To complement the information in this data sheet, refer to **Section 20. "Comparator Voltage Reference (CVREF)"** (DS60001109), which is available from the *Documentation > Reference Manual* section of the Microchip PIC32 web site (www.microchip.com/pic32).

The CVREF module is a 16-tap, resistor ladder network that provides a selectable reference voltage. Although its primary purpose is to provide a reference for the analog comparators, it also may be used independently of them.

The resistor ladder is segmented to provide two ranges of voltage reference values and has a power-down function to conserve power when the reference is not being used. The module's supply reference can be provided from either device VDD/VSS or an external voltage reference. The CVREF output is available for the comparators and typically available for pin output.

The comparator voltage reference has the following features:

- High and low range selection
- Sixteen output levels available for each range
- Internally connected to comparators to conserve device pins
- Output can be connected to a pin

A block diagram of the module is shown in Figure 24-1.

FIGURE 24-1: COMPARATOR VOLTAGE REFERENCE BLOCK DIAGRAM

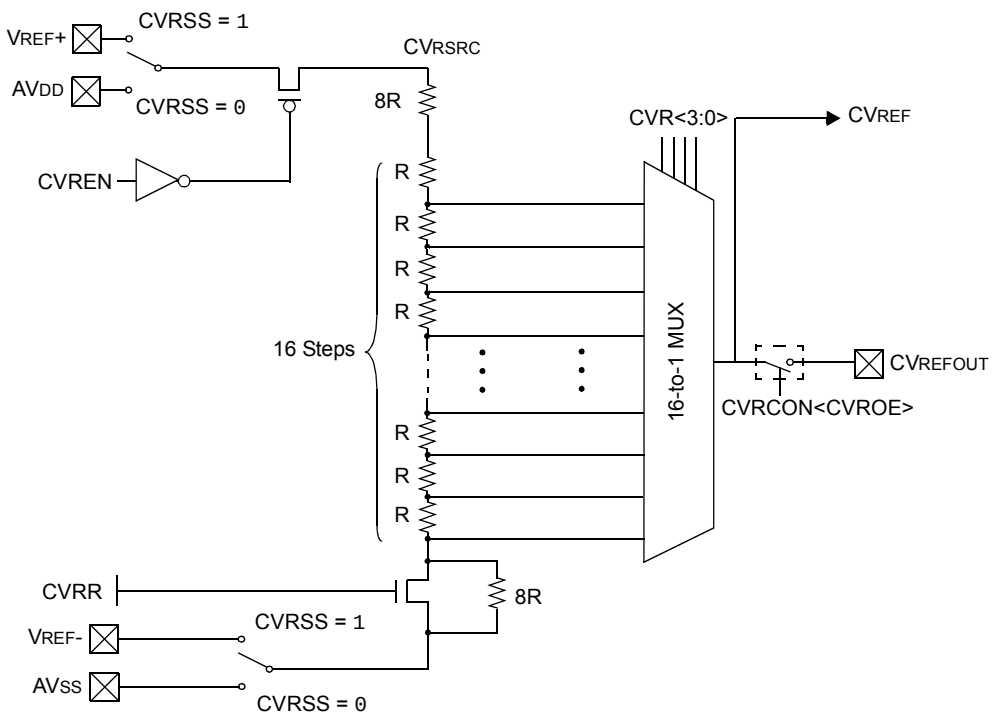

24.1 Comparator Voltage Reference Control Register

TABLE 24-1: COMPARATOR VOLTAGE REFERENCE REGISTER MAP

Virtual Address (BF80_#)	Register Name(1)	Bit Range	Bits																All Resets
			31/15	30/14	29/13	28/12	27/11	26/10	25/9	24/8	23/7	22/6	21/5	20/4	19/3	18/2	17/1	16/0	
9800	CVRCON	31:16	—	—	—	—	—	—	—	—	—	—	—	—	—	—	—	—	0000
		15:0	ON	—	—	—	—	—	—	—	—	CVROE	CVRR	CVRSS	CVR<3:0>				0000

Legend: x = unknown value on Reset; — = unimplemented, read as ‘0’. Reset values are shown in hexadecimal.

Note 1: All registers in this table have corresponding CLR, SET and INV registers at their virtual addresses, plus offsets of 0x4, 0x8 and 0xC, respectively. See **Section 11.2 “CLR, SET and INV Registers”** for more information.

© 2011-2016 Microchip Technology Inc.

REGISTER 24-1: CVRCON: COMPARATOR VOLTAGE REFERENCE CONTROL REGISTER

Bit Range	Bit 31/23/15/7	Bit 30/22/14/6	Bit 29/21/13/5	Bit 28/20/12/4	Bit 27/19/11/3	Bit 26/18/10/2	Bit 25/17/9/1	Bit 24/16/8/0
31:24	U-0	U-0	U-0	U-0	U-0	U-0	U-0	U-0
	—	—	—	—	—	—	—	—
23:16	U-0	U-0	U-0	U-0	U-0	U-0	U-0	U-0
	—	—	—	—	—	—	—	—
15:8	R/W-0	U-0	U-0	U-0	U-0	U-0	U-0	U-0
	ON(1)	—	—	—	—	—	—	—
7:0	U-0	R/W-0	R/W-0	R/W-0	R/W-0	R/W-0	R/W-0	R/W-0
	—	CVROE	CVRR	CVRSS	CVR<3:0>			

Legend:			
R = Readable bit	W = Writable bit	U = Unimplemented bit, read as ‘0’	
-n = Value at POR	‘1’ = Bit is set	‘0’ = Bit is cleared	x = Bit is unknown

bit 31-16 **Unimplemented:** Read as ‘0’

bit 15 **ON:** Comparator Voltage Reference On bit(1)
1 = Module is enabled
Setting this bit does not affect other bits in the register.
0 = Module is disabled and does not consume current.
Clearing this bit does not affect the other bits in the register.

bit 14-7 **Unimplemented:** Read as ‘0’

bit 6 **CVROE:** CV_{REFOUT} Enable bit
1 = Voltage level is output on CV_{REFOUT} pin
0 = Voltage level is disconnected from CV_{REFOUT} pin

bit 5 **CVRR:** CV_{REF} Range Selection bit
1 = 0 to 0.67 CV_{RSRC}, with $CV_{RSRC}/24$ step size
0 = 0.25 CV_{RSRC} to 0.75 CV_{RSRC}, with $CV_{RSRC}/32$ step size

bit 4 **CVRSS:** CV_{REF} Source Selection bit
1 = Comparator voltage reference source, $CV_{RSRC} = (V_{REF}+) – (V_{REF}-)$
0 = Comparator voltage reference source, $CV_{RSRC} = AV_{DD} – AV_{SS}$

bit 3-0 **CVR<3:0>:** CV_{REF} Value Selection $0 \leq CVR<3:0> \leq 15$ bits
When CVRR = 1:
$CV_{REF} = (CVR<3:0>/24) \bullet (CV_{RSRC})$
When CVRR = 0:
$CV_{REF} = 1/4 \bullet (CV_{RSRC}) + (CVR<3:0>/32) \bullet (CV_{RSRC})$

Note 1: When using 1:1 PBCLK divisor, the user’s software should not read/write the peripheral’s SFRs in the SYSCLK cycle immediately following the instruction that clears the module’s ON bit.

NOTES:

© 2011-2016 Microchip Technology Inc.

25.0 CHARGE TIME MEASUREMENT UNIT (CTMU)

Note: This data sheet summarizes the features of the PIC32MX1XX/2XX 28/36/44-pin Family of devices. It is not intended to be a comprehensive reference source. To complement the information in this data sheet, refer to **Section 37. "Charge Time Measurement Unit (CTMU)"** (DS60001167), which is available from the *Documentation > Reference Manual* section of the Microchip PIC32 web site (www.microchip.com/pic32).

The Charge Time Measurement Unit (CTMU) is a flexible analog module that has a configurable current source with a digital configuration circuit built around it. The CTMU can be used for differential time measurement between pulse sources and can be used for generating an asynchronous pulse. By working with other on-chip analog modules, the CTMU can be used for high resolution time measurement, measure capacitance, measure relative changes in capacitance or generate output pulses with a specific time delay. The CTMU is ideal for interfacing with capacitive-based sensors.

The CTMU module includes the following key features:

- Up to 13 channels available for capacitive or time measurement input
- On-chip precision current source
- 16-edge input trigger sources
- Selection of edge or level-sensitive inputs
- Polarity control for each edge source
- Control of edge sequence
- Control of response to edges
- High precision time measurement
- Time delay of external or internal signal asynchronous to system clock
- Integrated temperature sensing diode
- Control of current source during auto-sampling
- Four current source ranges
- Time measurement resolution of one nanosecond

A block diagram of the CTMU is shown in Figure 25-1.

FIGURE 25-1: CTMU BLOCK DIAGRAM

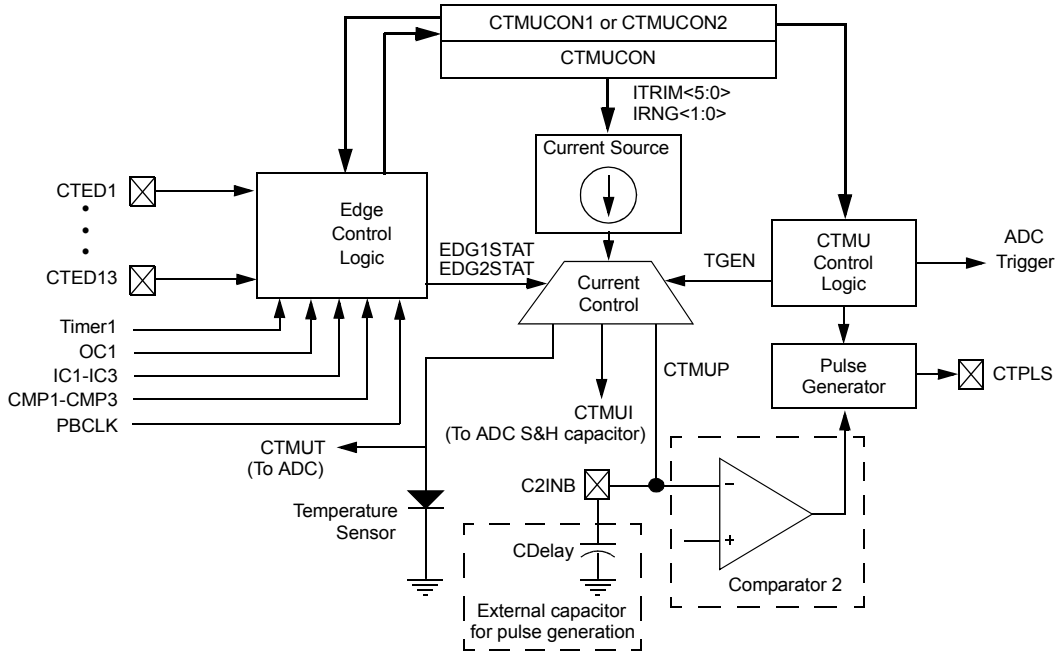

Current Control Selection	TGEN	EDG1STAT, EDG2STAT
CTMUT	0	EDG1STAT = EDG2STAT
CTMUI	0	EDG1STAT ≠ EDG2STAT
CTMUP	1	EDG1STAT ≠ EDG2STAT
No Connect	1	EDG1STAT = EDG2STAT

25.1 CTMU Control Registers

TABLE 25-1: CTMU REGISTER MAP

Virtual Address (BF80_#)	Register Name(1)	Bit Range	Bits																All Resets
			31/15	30/14	29/13	28/12	27/11	26/10	25/9	24/8	23/7	22/6	21/5	20/4	19/3	18/2	17/1	16/0	
A200	CTMUCON	31:16	EDG1MOD	EDG1POL	EDG1SEL<3:0>				EDG2STAT	EDG1STAT	EDG2MOD	EDG2POL	EDG2SEL<3:0>				—	—	0000
		15:0	ON	—	CTMUSIDL	TGEN	EDGEN	EDGSEQEN	IDISSEN	CTTRIG	ITRIM<5:0>						IRNG<1:0>		0000

Legend: x = unknown value on Reset; — = unimplemented, read as ‘0’. Reset values are shown in hexadecimal.

Note 1: All registers in this table have corresponding CLR, SET and INV registers at its virtual address, plus an offset of 0x4, 0x8 and 0xC, respectively. See **Section 11.2 “CLR, SET and INV Registers”** for more information.

© 2011-2016 Microchip Technology Inc.

REGISTER 25-1: CTMUCON: CTMU CONTROL REGISTER

Bit Range	Bit 31/23/15/7	Bit 30/22/14/6	Bit 29/21/13/5	Bit 28/20/12/4	Bit 27/19/11/3	Bit 26/18/10/2	Bit 25/17/9/1	Bit 24/16/8/0
31:24	R/W-0	R/W-0	R/W-0	R/W-0	R/W-0	R/W-0	R/W-0	R/W-0
	EDG1MOD	EDG1POL	EDG1SEL<3:0>				EDG2STAT	EDG1STAT
23:16	R/W-0	R/W-0	R/W-0	R/W-0	R/W-0	R/W-0	U-0	U-0
	EDG2MOD	EDG2POL	EDG2SEL<3:0>				—	—
15:8	R/W-0	U-0	R/W-0	R/W-0	R/W-0	R/W-0	R/W-0	R/W-0
	ON	—	CTMUSIDL	TGEN(1)	EDGEN	EDGSEQEN	IDISSEN(2)	CTTRIG
7:0	R/W-0	R/W-0	R/W-0	R/W-0	R/W-0	R/W-0	R/W-0	R/W-0
	ITRIM<5:0>						IRNG<1:0>	

Legend:			
R = Readable bit	W = Writable bit	U = Unimplemented bit, read as ‘0’	
-n = Value at POR	‘1’ = Bit is set	‘0’ = Bit is cleared	x = Bit is unknown

bit 31 **EDG1MOD:** Edge1 Edge Sampling Select bit
1 = Input is edge-sensitive
0 = Input is level-sensitive

bit 30 **EDG1POL:** Edge 1 Polarity Select bit
1 = Edge1 programmed for a positive edge response
0 = Edge1 programmed for a negative edge response

bit 29-26 **EDG1SEL<3:0>:** Edge 1 Source Select bits
1111 = C3OUT pin is selected
1110 = C2OUT pin is selected
1101 = C1OUT pin is selected
1100 = IC3 Capture Event is selected
1011 = IC2 Capture Event is selected
1010 = IC1 Capture Event is selected
1001 = CTED8 pin is selected
1000 = CTED7 pin is selected
0111 = CTED6 pin is selected
0110 = CTED5 pin is selected
0101 = CTED4 pin is selected
0100 = CTED3 pin is selected
0011 = CTED1 pin is selected
0010 = CTED2 pin is selected
0001 = OC1 Compare Event is selected
0000 = Timer1 Event is selected

bit 25 **EDG2STAT:** Edge2 Status bit
Indicates the status of Edge2 and can be written to control edge source
1 = Edge2 has occurred
0 = Edge2 has not occurred

Note 1: When this bit is set for Pulse Delay Generation, the EDG2SEL<3:0> bits must be set to ‘1110’ to select C2OUT.

2: The ADC module Sample and Hold capacitor is not automatically discharged between sample/conversion cycles. Software using the ADC as part of a capacitive measurement, must discharge the ADC capacitor before conducting the measurement. The IDISSEN bit, when set to ‘1’, performs this function. The ADC module must be sampling while the IDISSEN bit is active to connect the discharge sink to the capacitor array.

3: Refer to the CTMU Current Source Specifications (Table 30-41) in **Section 30.0 “Electrical Characteristics”** for current values.

4: This bit setting is not available for the CTMU temperature diode.

REGISTER 25-1: CTMUCON: CTMU CONTROL REGISTER (CONTINUED)

bit 24 **EDG1STAT:** Edge1 Status bit
Indicates the status of Edge1 and can be written to control edge source
1 = Edge1 has occurred
0 = Edge1 has not occurred

bit 23 **EDG2MOD:** Edge2 Edge Sampling Select bit
1 = Input is edge-sensitive
0 = Input is level-sensitive

bit 22 **EDG2POL:** Edge 2 Polarity Select bit
1 = Edge2 programmed for a positive edge response
0 = Edge2 programmed for a negative edge response

bit 21-18 **EDG2SEL<3:0>:** Edge 2 Source Select bits
1111 = C3OUT pin is selected
1110 = C2OUT pin is selected
1101 = C1OUT pin is selected
1100 = PBCLK clock is selected
1011 = IC3 Capture Event is selected
1010 = IC2 Capture Event is selected
1001 = IC1 Capture Event is selected
1000 = CTED13 pin is selected
0111 = CTED12 pin is selected
0110 = CTED11 pin is selected
0101 = CTED10 pin is selected
0100 = CTED9 pin is selected
0011 = CTED1 pin is selected
0010 = CTED2 pin is selected
0001 = OC1 Compare Event is selected
0000 = Timer1 Event is selected

bit 17-16 **Unimplemented:** Read as '0'

bit 15 **ON:** ON Enable bit
1 = Module is enabled
0 = Module is disabled

bit 14 **Unimplemented:** Read as '0'

bit 13 **CTMUSIDL:** Stop in Idle Mode bit
1 = Discontinue module operation when the device enters Idle mode
0 = Continue module operation when the device enters Idle mode

bit 12 **TGEN:** Time Generation Enable bit(1)
1 = Enables edge delay generation
0 = Disables edge delay generation

bit 11 **EDGEN:** Edge Enable bit
1 = Edges are not blocked
0 = Edges are blocked

Note 1: When this bit is set for Pulse Delay Generation, the EDG2SEL<3:0> bits must be set to '1110' to select C2OUT.

2: The ADC module Sample and Hold capacitor is not automatically discharged between sample/conversion cycles. Software using the ADC as part of a capacitive measurement, must discharge the ADC capacitor before conducting the measurement. The IDISSEN bit, when set to '1', performs this function. The ADC module must be sampling while the IDISSEN bit is active to connect the discharge sink to the capacitor array.

3: Refer to the CTMU Current Source Specifications (Table 30-41) in **Section 30.0 "Electrical Characteristics"** for current values.

4: This bit setting is not available for the CTMU temperature diode.

© 2011-2016 Microchip Technology Inc.

REGISTER 25-1: CTMUCON: CTMU CONTROL REGISTER (CONTINUED)

bit 10 **EDGSEQEN:** Edge Sequence Enable bit
1 = Edge1 must occur before Edge2 can occur
0 = No edge sequence is needed

bit 9 **IDISSEN:** Analog Current Source Control bit(2)
1 = Analog current source output is grounded
0 = Analog current source output is not grounded

bit 8 **CTTRIG:** Trigger Control bit
1 = Trigger output is enabled
0 = Trigger output is disabled

bit 7-2 **ITRIM<5:0>:** Current Source Trim bits
011111 = Maximum positive change from nominal current
011110
.
.
.
000001 = Minimum positive change from nominal current
000000 = Nominal current output specified by IRNG<1:0>
111111 = Minimum negative change from nominal current
.
.
.
100010
100001 = Maximum negative change from nominal current

bit 1-0 **IRNG<1:0>:** Current Range Select bits(3)
11 = 100 times base current
10 = 10 times base current
01 = Base current level
00 = 1000 times base current(4)

Note 1: When this bit is set for Pulse Delay Generation, the EDG2SEL<3:0> bits must be set to '1110' to select C2OUT.

2: The ADC module Sample and Hold capacitor is not automatically discharged between sample/conversion cycles. Software using the ADC as part of a capacitive measurement, must discharge the ADC capacitor before conducting the measurement. The IDISSEN bit, when set to '1', performs this function. The ADC module must be sampling while the IDISSEN bit is active to connect the discharge sink to the capacitor array.

3: Refer to the CTMU Current Source Specifications (Table 30-41) in **Section 30.0 "Electrical Characteristics"** for current values.

4: This bit setting is not available for the CTMU temperature diode.

NOTES:

© 2011-2016 Microchip Technology Inc.

26.0 POWER-SAVING FEATURES

Note: This data sheet summarizes the features of the PIC32MX1XX/2XX 28/36/44-pin Family of devices. It is not intended to be a comprehensive reference source. To complement the information in this data sheet, refer to **Section 10. "Power-Saving Features"** (DS60001130), which is available from the *Documentation* > *Reference Manual* section of the Microchip PIC32 web site (www.microchip.com/pic32).

This section describes power-saving features for the PIC32MX1XX/2XX 28/36/44-pin Family. The PIC32 devices offer a total of nine methods and modes, organized into two categories, that allow the user to balance power consumption with device performance. In all of the methods and modes described in this section, power-saving is controlled by software.

26.1 Power Saving with CPU Running

When the CPU is running, power consumption can be controlled by reducing the CPU clock frequency, lowering the PBCLK and by individually disabling modules. These methods are grouped into the following categories:

- FRC Run mode: the CPU is clocked from the FRC clock source with or without postscalers
- LPRC Run mode: the CPU is clocked from the LPRC clock source
- SOSC Run mode: the CPU is clocked from the SOSC clock source

In addition, the Peripheral Bus Scaling mode is available where peripherals are clocked at the programmable fraction of the CPU clock (SYSCLK).

26.2 CPU Halted Methods

The device supports two power-saving modes, Sleep and Idle, both of which Halt the clock to the CPU. These modes operate with all clock sources, as follows:

- POSC Idle mode: the system clock is derived from the POSC. The system clock source continues to operate. Peripherals continue to operate, but can optionally be individually disabled.
- FRC Idle mode: the system clock is derived from the FRC with or without postscalers. Peripherals continue to operate, but can optionally be individually disabled.
- SOSC Idle mode: the system clock is derived from the SOSC. Peripherals continue to operate, but can optionally be individually disabled.
- LPRC Idle mode: the system clock is derived from the LPRC. Peripherals continue to operate, but can optionally be individually disabled. This is the lowest power mode for the device with a clock running.
- Sleep mode: the CPU, the system clock source and any peripherals that operate from the system clock source are Halted. Some peripherals can operate in Sleep using specific clock sources. This is the lowest power mode for the device.

26.3 Power-Saving Operation

Peripherals and the CPU can be Halted or disabled to further reduce power consumption.

26.3.1 SLEEP MODE

Sleep mode has the lowest power consumption of the device power-saving operating modes. The CPU and most peripherals are Halted. Select peripherals can continue to operate in Sleep mode and can be used to wake the device from Sleep. See the individual peripheral module sections for descriptions of behavior in Sleep.

Sleep mode includes the following characteristics:

- The CPU is halted
- The system clock source is typically shutdown. See **Section 26.3.3 "Peripheral Bus Scaling Method"** for specific information.
- There can be a wake-up delay based on the oscillator selection
- The Fail-Safe Clock Monitor (FSCM) does not operate during Sleep mode
- The BOR circuit remains operative during Sleep mode
- The WDT, if enabled, is not automatically cleared prior to entering Sleep mode
- Some peripherals can continue to operate at limited functionality in Sleep mode. These peripherals include I/O pins that detect a change in the input signal, WDT, ADC, UART and peripherals that use an external clock input or the internal LPRC oscillator (e.g., RTCC, Timer1 and Input Capture).
- I/O pins continue to sink or source current in the same manner as they do when the device is not in Sleep
- The USB module can override the disabling of the Posc or FRC. Refer to the USB section for specific details.
- Modules can be individually disabled by software prior to entering Sleep in order to further reduce consumption

The processor will exit, or 'wake-up', from Sleep on one of the following events:

- On any interrupt from an enabled source that is operating in Sleep. The interrupt priority must be greater than the current CPU priority.
- On any form of device Reset
- On a WDT time-out

If the interrupt priority is lower than or equal to the current priority, the CPU will remain Halted, but the PBCLK will start running and the device will enter into Idle mode.

26.3.2 IDLE MODE

In Idle mode, the CPU is Halted but the System Clock (SYSCLK) source is still enabled. This allows peripherals to continue operation when the CPU is Halted. Peripherals can be individually configured to Halt when entering Idle by setting their respective SIDL bit. Latency, when exiting Idle mode, is very low due to the CPU oscillator source remaining active.

Note 1: Changing the PBCLK divider ratio requires recalculation of peripheral timing. For example, assume the UART is configured for 9600 baud with a PB clock ratio of 1:1 and a POSC of 8 MHz. When the PB clock divisor of 1:2 is used, the input frequency to the baud clock is cut in half; therefore, the baud rate is reduced to 1/2 its former value. Due to numeric truncation in calculations (such as the baud rate divisor), the actual baud rate may be a tiny percentage different than expected. For this reason, any timing calculation required for a peripheral should be performed with the new PB clock frequency instead of scaling the previous value based on a change in the PB divisor ratio.

2: Oscillator start-up and PLL lock delays are applied when switching to a clock source that was disabled and that uses a crystal and/or the PLL. For example, assume the clock source is switched from POSC to LPRC just prior to entering Sleep in order to save power. No oscillator start-up delay would be applied when exiting Idle. However, when switching back to POSC, the appropriate PLL and/or oscillator start-up/lock delays would be applied.

The device enters Idle mode when the SLPEN (OSCCON<4>) bit is clear and a `WAIT` instruction is executed.

The processor will wake or exit from Idle mode on the following events:

- On any interrupt event for which the interrupt source is enabled. The priority of the interrupt event must be greater than the current priority of the CPU. If the priority of the interrupt event is lower than or equal to current priority of the CPU, the CPU will remain Halted and the device will remain in Idle mode.
- On any form of device Reset
- On a WDT time-out interrupt

26.3.3 PERIPHERAL BUS SCALING METHOD

Most of the peripherals on the device are clocked using the PBCLK. The Peripheral Bus can be scaled relative to the SYSCLK to minimize the dynamic power consumed by the peripherals. The PBCLK divisor is controlled by PBDIV<1:0> (OSCCON<20:19>), allowing SYSCLK to PBCLK ratios of 1:1, 1:2, 1:4 and 1:8. All peripherals using PBCLK are affected when the divisor is changed. Peripherals such as the USB, Interrupt Controller, DMA, and the bus matrix are clocked directly from SYSCLK. As a result, they are not affected by PBCLK divisor changes.

Changing the PBCLK divisor affects:

- The CPU to peripheral access latency. The CPU has to wait for next PBCLK edge for a read to complete. In 1:8 mode, this results in a latency of one to seven SYSCLKs.
- The power consumption of the peripherals. Power consumption is directly proportional to the frequency at which the peripherals are clocked. The greater the divisor, the lower the power consumed by the peripherals.

To minimize dynamic power, the PB divisor should be chosen to run the peripherals at the lowest frequency that provides acceptable system performance. When selecting a PBCLK divider, peripheral clock requirements, such as baud rate accuracy, should be taken into account. For example, the UART peripheral may not be able to achieve all baud rate values at some PBCLK divider depending on the SYSCLK value.

© 2011-2016 Microchip Technology Inc.

26.4 Peripheral Module Disable

The Peripheral Module Disable (PMD) registers provide a method to disable a peripheral module by stopping all clock sources supplied to that module. When a peripheral is disabled using the appropriate PMD control bit, the peripheral is in a minimum power consumption state. The control and status registers associated with the peripheral are also disabled, so writes to those registers do not have effect and read values are invalid.

To disable a peripheral, the associated PMDx bit must be set to '1'. To enable a peripheral, the associated PMDx bit must be cleared (default). See Table 26-1 for more information.

Note:	Disabling a peripheral module while it's ON bit is set, may result in undefined behavior. The ON bit for the associated peripheral module must be cleared prior to disable a module via the PMDx bits.

TABLE 26-1: PERIPHERAL MODULE DISABLE BITS AND LOCATIONS

Peripheral(1)	PMDx bit Name(1)	Register Name and Bit Location
ADC1	AD1MD	PMD1<0>
CTMU	CTMUMD	PMD1<8>
Comparator Voltage Reference	CVRMD	PMD1<12>
Comparator 1	CMP1MD	PMD2<0>
Comparator 2	CMP2MD	PMD2<1>
Comparator 3	CMP3MD	PMD2<2>
Input Capture 1	IC1MD	PMD3<0>
Input Capture 2	IC2MD	PMD3<1>
Input Capture 3	IC3MD	PMD3<2>
Input Capture 4	IC4MD	PMD3<3>
Input Capture 5	IC5MD	PMD3<4>
Output Compare 1	OC1MD	PMD3<16>
Output Compare 2	OC2MD	PMD3<17>
Output Compare 3	OC3MD	PMD3<18>
Output Compare 4	OC4MD	PMD3<19>
Output Compare 5	OC5MD	PMD3<20>
Timer1	T1MD	PMD4<0>
Timer2	T2MD	PMD4<1>
Timer3	T3MD	PMD4<2>
Timer4	T4MD	PMD4<3>
Timer5	T5MD	PMD4<4>
UART1	U1MD	PMD5<0>
UART2	U2MD	PMD5<1>
SPI1	SPI1MD	PMD5<8>
SPI2	SPI2MD	PMD5<9>
I2C1	I2C1MD	PMD5<16>
I2C2	I2C2MD	PMD5<17>
USB(2)	USBMD	PMD5<24>
RTCC	RTCCMD	PMD6<0>
Reference Clock Output	REFOMD	PMD6<1>
PMP	PMPMD	PMD6<16>

Note 1: Not all modules and associated PMDx bits are available on all devices. See **TABLE 1: "PIC32MX1XX 28/36/44-Pin General Purpose Family Features"** and **TABLE 2: "PIC32MX2XX 28/36/44-pin USB Family Features"** for the lists of available peripherals.

2: The module must not be busy after clearing the associated ON bit and prior to setting the USBMD bit.

26.4.1 CONTROLLING CONFIGURATION CHANGES

Because peripherals can be disabled during run time, some restrictions on disabling peripherals are needed to prevent accidental configuration changes. PIC32 devices include two features to prevent alterations to enabled or disabled peripherals:

- Control register lock sequence
- Configuration bit select lock

26.4.1.1 Control Register Lock

Under normal operation, writes to the PMDx registers are not allowed. Attempted writes appear to execute normally, but the contents of the registers remain unchanged. To change these registers, they must be unlocked in hardware. The register lock is controlled by the Configuration bit, PMDLOCK (CFGCON<12>). Setting PMDLOCK prevents writes to the control registers; clearing PMDLOCK allows writes.

To set or clear PMDLOCK, an unlock sequence must be executed. Refer to **Section 6. “Oscillator”** (DS60001112) in the *“PIC32 Family Reference Manual”* for details.

26.4.1.2 Configuration Bit Select Lock

As an additional level of safety, the device can be configured to prevent more than one write session to the PMDx registers. The Configuration bit, PMDL1WAY (DEVCFG3<28>), blocks the PMDLOCK bit from being cleared after it has been set once. If PMDLOCK remains set, the register unlock procedure does not execute, and the peripheral pin select control registers cannot be written to. The only way to clear the bit and re-enable PMD functionality is to perform a device Reset.

© 2011-2016 Microchip Technology Inc.

TABLE 26-2: PERIPHERAL MODULE DISABLE REGISTER MAP

Virtual Address (BF80_#)	Register Name(1)	Bit Range	Bits																All Resets
			31/15	30/14	29/13	28/12	27/11	26/10	25/9	24/8	23/7	22/6	21/5	20/4	19/3	18/2	17/1	16/0	
F240	PMD1	31:16	—	—	—	—	—	—	—	—	—	—	—	—	—	—	—	—	0000
		15:0	—	—	—	CVRMD	—	—	—	CTMUMD	—	—	—	—	—	—	—	AD1MD	0000
F250	PMD2	31:16	—	—	—	—	—	—	—	—	—	—	—	—	—	—	—	—	0000
		15:0	—	—	—	—	—	—	—	—	—	—	—	—	—	CMP3MD	CMP2MD	CMP1MD	0000
F260	PMD3	31:16	—	—	—	—	—	—	—	—	—	—	—	OC5MD	OC4MD	OC3MD	OC2MD	OC1MD	0000
		15:0	—	—	—	—	—	—	—	—	—	—	—	IC5MD	IC4MD	IC3MD	IC2MD	IC1MD	0000
F270	PMD4	31:16	—	—	—	—	—	—	—	—	—	—	—	—	—	—	—	—	0000
		15:0	—	—	—	—	—	—	—	—	—	—	—	T5MD	T4MD	T3MD	T2MD	T1MD	0000
F280	PMD5	31:16	—	—	—	—	—	—	—	USB1MD	—	—	—	—	—	—	I2C1MD	I2C1MD	0000
		15:0	—	—	—	—	—	—	SPI2MD	SPI1MD	—	—	—	—	—	—	U2MD	U1MD	0000
F290	PMD6	31:16	—	—	—	—	—	—	—	—	—	—	—	—	—	—	—	PMPMD	0000
		15:0	—	—	—	—	—	—	—	—	—	—	—	—	—	—	REFOMD	RTCCMD	0000

Legend: x = unknown value on Reset; — = unimplemented, read as '0'. Reset values are shown in hexadecimal.

Note 1: All registers in this table have corresponding CLR, SET and INV registers at their virtual addresses, plus offsets of 0x4, 0x8 and 0xC, respectively. See **Section 11.2 "CLR, SET and INV Registers"** for more information.

© 2011-2016 Microchip Technology Inc.

NOTES:

© 2011-2016 Microchip Technology Inc.

27.0 SPECIAL FEATURES

Note: This data sheet summarizes the features of the PIC32MX1XX/2XX 28/36/44-pin Family of devices. However, it is not intended to be a comprehensive reference source. To complement the information in this data sheet, refer to **Section 32. "Configuration"** (DS60001124) and **Section 33. "Programming and Diagnostics"** (DS60001129), which are available from the *Documentation* > *Reference Manual* section of the Microchip PIC32 web site (www.microchip.com/pic32).

PIC32MX1XX/2XX 28/36/44-pin Family devices include the following features intended to maximize application flexibility, reliability and minimize cost through elimination of external components.

- Flexible device configuration
- Joint Test Action Group (JTAG) interface
- In-Circuit Serial Programming™ (ICSP™)

27.1 Configuration Bits

The Configuration bits can be programmed using the following registers to select various device configurations.

- DEVCFG0: Device Configuration Word 0
- DEVCFG1: Device Configuration Word 1
- DEVCFG2: Device Configuration Word 2
- DEVCFG3: Device Configuration Word 3
- CFGCON: Configuration Control Register

In addition, the DEVID register (Register 27-6) provides device and revision information.

27.2 Configuration Registers

TABLE 27-1: DEVCFG: DEVICE CONFIGURATION WORD SUMMARY

Virtual Address (BFC0_#)	Register Name	Bit Range	Bits 31/15	30/14	29/13	28/12	27/11	26/10	25/9	24/8	23/7	22/6	21/5	20/4	19/3	18/2	17/1	16/0	All Resets
0BF0	DEVCFG3	31:16	FVBUSONIO	FUSBIDIO	IOL1WAY	PMDL1WAY	—	—	—	—	—	—	—	—	—	—	—	—	xxxx
		15:0	USERID<15:0>																xxxx
0BF4	DEVCFG2	31:16	—	—	—	—	—	—	—	—	—	—	—	—	—	FPLLODIV<2:0>			xxxx
		15:0	UPLLEN(1)	—	—	—	—	UPLLIDIV<2:0>(1)			—	FPLLMUL<2:0>			—	FPLLIDIV<2:0>			xxxx
0BF8	DEVCFG1	31:16	—	—	—	—	—	—	FWDTWINSZ<1:0>		FWDTEN	WINDIS	—	WDTPS<4:0>					xxxx
		15:0	FCKSM<1:0>		FPBDIV<1:0>		—	OSCIOFNC	POSCMOD<1:0>		IESO	—	FSOSCEN	—	—	FNOSC<2:0>			xxxx
0BFC	DEVCFG0	31:16	—	—	—	CP	—	—	—	BWP	—	—	—	—	—	PWP<8:6>(2)			xxxx
		15:0	PWP<5:0>						—	—	—	—	—	ICESEL<1:0>		JTAGEN	DEBUG<1:0>		xxxx

Legend: x = unknown value on Reset; — = unimplemented, read as '0'. Reset values are shown in hexadecimal.

Note 1: This bit is only available on PIC32MX2XX devices.

2: PWP<8:7> are only available on devices with 256 KB of Flash.

TABLE 27-2: DEVICE ID, REVISION, AND CONFIGURATION SUMMARY

Virtual Address (BF80_#)	Register Name	Bit Range	Bits 31/15	30/14	29/13	28/12	27/11	26/10	25/9	24/8	23/7	22/6	21/5	20/4	19/3	18/2	17/1	16/0	All Resets(1)
F220	DEVID	31:16	VER<3:0>				DEVID<27:16>												xxxx(1)
		15:0	DEVID<15:0>																xxxx(1)
F200	CFGCON	31:16	—	—	—	—	—	—	—	—	—	—	—	—	—	—	—	—	0000
		15:0	—	—	IOLOCK	PMDLOCK	—	—	—	—	—	—	—	—	JTAGEN	—	—	TDOEN	000B
F230	SYSKEY(3)	31:16	SYSKEY<31:0>																0000
		15:0																	0000

Legend: x = unknown value on Reset; — = unimplemented, read as '0'. Reset values are shown in hexadecimal.

Note 1: Reset values are dependent on the device variant.

© 2011-2016 Microchip Technology Inc.

REGISTER 27-1: DEVCFG0: DEVICE CONFIGURATION WORD 0

Bit Range	Bit 31/23/15/7	Bit 30/22/14/6	Bit 29/21/13/5	Bit 28/20/12/4	Bit 27/19/11/3	Bit 26/18/10/2	Bit 25/17/9/1	Bit 24/16/8/0
31:24	r-0	r-1	r-1	R/P	r-1	r-1	r-1	R/P
	—	—	—	CP	—	—	—	BWP
23:16	r-1	r-1	r-1	r-1	r-1	R/P	R/P	R/P
	—	—	—	—	—	PWP<8:6>(3)		
15:8	R/P	R/P	R/P	R/P	R/P	R/P	r-1	r-1
	PWP<5:0>						—	—
7:0	r-1	r-1	r-1	R/P	R/P	R/P	R/P	R/P
	—	—	—	ICESEL<1:0>(2)		JTAGEN(1)	DEBUG<1:0>	

Legend:	r = Reserved bit	P = Programmable bit	
R = Readable bit	W = Writable bit	U = Unimplemented bit, read as ‘0’	
-n = Value at POR	‘1’ = Bit is set	‘0’ = Bit is cleared	x = Bit is unknown

bit 31 **Reserved:** Write ‘0’

bit 30-29 **Reserved:** Write ‘1’

bit 28 **CP:** Code-Protect bit
Prevents boot and program Flash memory from being read or modified by an external programming device.
1 = Protection is disabled
0 = Protection is enabled

bit 27-25 **Reserved:** Write ‘1’

bit 24 **BWP:** Boot Flash Write-Protect bit
Prevents boot Flash memory from being modified during code execution.
1 = Boot Flash is writable
0 = Boot Flash is not writable

bit 23-19 **Reserved:** Write ‘1’

Note 1: This bit sets the value for the JTAGEN bit in the CFGCON register.

2: The PGEC4/PGED4 pin pair is not available on all devices. Refer to the **“Pin Diagrams”** section for availability.

3: The PWP<8:7> bits are only available on devices with 256 KB Flash.

REGISTER 27-1: DEVCFG0: DEVICE CONFIGURATION WORD 0 (CONTINUED)

bit 18-10 **PWP<8:0>:** Program Flash Write-Protect bits[3]

Prevents selected program Flash memory pages from being modified during code execution.

111111111 = Disabled
111111110 = Memory below 0x0400 address is write-protected
111111101 = Memory below 0x0800 address is write-protected
111111100 = Memory below 0x0C00 address is write-protected
111111011 = Memory below 0x1000 (4K) address is write-protected
111111010 = Memory below 0x1400 address is write-protected
111111001 = Memory below 0x1800 address is write-protected
111111000 = Memory below 0x1C00 address is write-protected
111110111 = Memory below 0x2000 (8K) address is write-protected
111110110 = Memory below 0x2400 address is write-protected
111110101 = Memory below 0x2800 address is write-protected
111110100 = Memory below 0x2C00 address is write-protected
111110011 = Memory below 0x3000 address is write-protected
111110010 = Memory below 0x3400 address is write-protected
111110001 = Memory below 0x3800 address is write-protected
111110000 = Memory below 0x3C00 address is write-protected
111101111 = Memory below 0x4000 (16K) address is write-protected
.
.
.
110111111 = Memory below 0x10000 (64K) address is write-protected
.
.
.
101111111 = Memory below 0x20000 (128K) address is write-protected
.
.
.
011111111 = Memory below 0x40000 (256K) address is write-protected
.
.
.
000000000 = All possible memory is write-protected

bit 9-5 **Reserved:** Write '1'

bit 4-3 **ICESEL<1:0>:** In-Circuit Emulator/Debugger Communication Channel Select bits[2]

11 = PGEC1/PGED1 pair is used
10 = PGEC2/PGED2 pair is used
01 = PGEC3/PGED3 pair is used
00 = PGEC4/PGED4 pair is used[2]

bit 2 **JTAGEN:** JTAG Enable bit[1]

1 = JTAG is enabled
0 = JTAG is disabled

bit 1-0 **DEBUG<1:0>:** Background Debugger Enable bits (forced to '11' if code-protect is enabled)

1x = Debugger is disabled
0x = Debugger is enabled

Note 1: This bit sets the value for the JTAGEN bit in the CFGCON register.

2: The PGEC4/PGED4 pin pair is not available on all devices. Refer to the **"Pin Diagrams"** section for availability.

3: The PWP<8:7> bits are only available on devices with 256 KB Flash.

© 2011-2016 Microchip Technology Inc.

REGISTER 27-2: DEVCFG1: DEVICE CONFIGURATION WORD 1

Bit Range	Bit 31/23/15/7	Bit 30/22/14/6	Bit 29/21/13/5	Bit 28/20/12/4	Bit 27/19/11/3	Bit 26/18/10/2	Bit 25/17/9/1	Bit 24/16/8/0
31:24	r-1	r-1	r-1	r-1	r-1	r-1	R/P	R/P
	—	—	—	—	—	—	FWDTWINSZ<1:0>	
23:16	R/P	R/P	r-1	R/P	R/P	R/P	R/P	R/P
	FWDTEN	WINDIS	—	WDTPS<4:0>				
15:8	R/P	R/P	R/P	R/P	r-1	R/P	R/P	R/P
	FCKSM<1:0>		FPBDIV<1:0>		—	OSCIOFNC	POSCMOD<1:0>	
7:0	R/P	r-1	R/P	r-1	r-1	R/P	R/P	R/P
	IESO	—	FSOSCEN	—	—	FNOSC<2:0>		

Legend:	r = Reserved bit	P = Programmable bit	
R = Readable bit	W = Writable bit	U = Unimplemented bit, read as ‘0’	
-n = Value at POR	‘1’ = Bit is set	‘0’ = Bit is cleared	x = Bit is unknown

bit 31-26 **Reserved:** Write ‘1’

bit 25-24 **FWDTWINSZ<1:0>:** Watchdog Timer Window Size bits
11 = Window size is 25%
10 = Window size is 37.5%
01 = Window size is 50%
00 = Window size is 75%

bit 23 **FWDTEN:** Watchdog Timer Enable bit
1 = Watchdog Timer is enabled and cannot be disabled by software
0 = Watchdog Timer is not enabled; it can be enabled in software

bit 22 **WINDIS:** Watchdog Timer Window Enable bit
1 = Watchdog Timer is in non-Window mode
0 = Watchdog Timer is in Window mode

bit 21 **Reserved:** Write ‘1’

bit 20-16 **WDTPS<4:0>:** Watchdog Timer Postscale Select bits
10100 = 1:1048576
10011 = 1:524288
10010 = 1:262144
10001 = 1:131072
10000 = 1:65536
01111 = 1:32768
01110 = 1:16384
01101 = 1:8192
01100 = 1:4096
01011 = 1:2048
01010 = 1:1024
01001 = 1:512
01000 = 1:256
00111 = 1:128
00110 = 1:64
00101 = 1:32
00100 = 1:16
00011 = 1:8
00010 = 1:4
00001 = 1:2
00000 = 1:1
All other combinations not shown result in operation = 10100

Note 1: Do not disable the POSC (POSCMOD = 11) when using this oscillator source.

REGISTER 27-2: DEVCFG1: DEVICE CONFIGURATION WORD 1 (CONTINUED)

bit 15-14 **FCKSM<1:0>:** Clock Switching and Monitor Selection Configuration bits
1x = Clock switching is disabled, Fail-Safe Clock Monitor is disabled
01 = Clock switching is enabled, Fail-Safe Clock Monitor is disabled
00 = Clock switching is enabled, Fail-Safe Clock Monitor is enabled

bit 13-12 **FPBDIV<1:0>:** Peripheral Bus Clock Divisor Default Value bits
11 = PBCLK is SYSCLK divided by 8
10 = PBCLK is SYSCLK divided by 4
01 = PBCLK is SYSCLK divided by 2
00 = PBCLK is SYSCLK divided by 1

bit 11 **Reserved:** Write '1'

bit 10 **OSCIOFNC:** CLKO Enable Configuration bit
1 = CLKO output disabled
0 = CLKO output signal active on the OSCO pin; Primary Oscillator must be disabled or configured for the External Clock mode (EC) for the CLKO to be active (POSCMOD<1:0> = 11 or 00)

bit 9-8 **POSCMOD<1:0>:** Primary Oscillator Configuration bits
11 = Primary Oscillator is disabled
10 = HS Oscillator mode is selected
01 = XT Oscillator mode is selected
00 = External Clock mode is selected

bit 7 **IESO:** Internal External Switchover bit
1 = Internal External Switchover mode is enabled (Two-Speed Start-up is enabled)
0 = Internal External Switchover mode is disabled (Two-Speed Start-up is disabled)

bit 6 **Reserved:** Write '1'

bit 5 **FSOSCEN:** Secondary Oscillator Enable bit
1 = Enable Secondary Oscillator
0 = Disable Secondary Oscillator

bit 4-3 **Reserved:** Write '1'

bit 2-0 **FNOSC<2:0>:** Oscillator Selection bits
111 = Fast RC Oscillator with divide-by-N (FRCDIV)
110 = FRCDIV16 Fast RC Oscillator with fixed divide-by-16 postscaler
101 = Low-Power RC Oscillator (LPRC)
100 = Secondary Oscillator (SOSC)
011 = Primary Oscillator (POSC) with PLL module (XT+PLL, HS+PLL, EC+PLL)
010 = Primary Oscillator (XT, HS, EC)(1)
001 = Fast RC Oscillator with divide-by-N with PLL module (FRCDIV+PLL)
000 = Fast RC Oscillator (FRC)

Note 1: Do not disable the POSC (POSCMOD = 11) when using this oscillator source.

© 2011-2016 Microchip Technology Inc.

REGISTER 27-3: DEVCFG2: DEVICE CONFIGURATION WORD 2

Bit Range	Bit 31/23/15/7	Bit 30/22/14/6	Bit 29/21/13/5	Bit 28/20/12/4	Bit 27/19/11/3	Bit 26/18/10/2	Bit 25/17/9/1	Bit 24/16/8/0
31:24	r-1	r-1	r-1	r-1	r-1	r-1	r-1	r-1
	—	—	—	—	—	—	—	—
23:16	r-1	r-1	r-1	r-1	r-1	R/P	R/P	R/P
	—	—	—	—	—	FPLLODIV<2:0>		
15:8	R/P	r-1	r-1	r-1	r-1	R/P	R/P	R/P
	UPLLEN(1)	—	—	—	—	UPLLIDIV<2:0>(1)		
7:0	r-1	R/P-1	R/P	R/P-1	r-1	R/P	R/P	R/P
	—	FPLLMUL<2:0>			—	FPLLIDIV<2:0>		

Legend:	r = Reserved bit	P = Programmable bit	
R = Readable bit	W = Writable bit	U = Unimplemented bit, read as ‘0’	
-n = Value at POR	‘1’ = Bit is set	‘0’ = Bit is cleared	x = Bit is unknown

bit 31-19 **Reserved:** Write ‘1’

bit 18-16 **FPLLODIV<2:0>:** Default PLL Output Divisor bits
- 111 = PLL output divided by 256
- 110 = PLL output divided by 64
- 101 = PLL output divided by 32
- 100 = PLL output divided by 16
- 011 = PLL output divided by 8
- 010 = PLL output divided by 4
- 001 = PLL output divided by 2
- 000 = PLL output divided by 1

bit 15 **UPLLEN:** USB PLL Enable bit(1)
- 1 = Disable and bypass USB PLL
- 0 = Enable USB PLL

bit 14-11 **Reserved:** Write ‘1’

bit 10-8 **UPLLIDIV<2:0>:** USB PLL Input Divider bits(1)
- 111 = 12x divider
- 110 = 10x divider
- 101 = 6x divider
- 100 = 5x divider
- 011 = 4x divider
- 010 = 3x divider
- 010 = 3x divider
- 001 = 2x divider
- 000 = 1x divider

bit 7 **Reserved:** Write ‘1’

bit 6-4 **FPLLMUL<2:0>:** PLL Multiplier bits
- 111 = 24x multiplier
- 110 = 21x multiplier
- 101 = 20x multiplier
- 100 = 19x multiplier
- 011 = 18x multiplier
- 010 = 17x multiplier
- 001 = 16x multiplier
- 000 = 15x multiplier

bit 3 **Reserved:** Write ‘1’

Note 1: This bit is only available on PIC32MX2XX devices.

REGISTER 27-3: DEVCFG2: DEVICE CONFIGURATION WORD 2 (CONTINUED)

bit 2-0 **FPLLIDIV<2:0>:** PLL Input Divider bits

`111` = 12x divider
`110` = 10x divider
`101` = 6x divider
`100` = 5x divider
`011` = 4x divider
`010` = 3x divider
`001` = 2x divider
`000` = 1x divider

Note 1: This bit is only available on PIC32MX2XX devices.

© 2011-2016 Microchip Technology Inc.

REGISTER 27-4: DEVCFG3: DEVICE CONFIGURATION WORD 3

Bit Range	Bit 31/23/15/7	Bit 30/22/14/6	Bit 29/21/13/5	Bit 28/20/12/4	Bit 27/19/11/3	Bit 26/18/10/2	Bit 25/17/9/1	Bit 24/16/8/0
31:24	R/P	R/P	R/P	R/P	r-1	r-1	r-1	r-1
	FVBUSONIO	FUSBIDIO	IOL1WAY	PMDL1WAY	—	—	—	—
23:16	r-1	r-1	r-1	r-1	r-1	r-1	r-1	r-1
	—	—	—	—	—	—	—	—
15:8	R/P	R/P	R/P	R/P	R/P	R/P	R/P	R/P
	USERID<15:8>							
7:0	R/P	R/P	R/P	R/P	R/P	R/P	R/P	R/P
	USERID<7:0>							

Legend:	r = Reserved bit	P = Programmable bit	
R = Readable bit	W = Writable bit	U = Unimplemented bit, read as ‘0’	
-n = Value at POR	‘1’ = Bit is set	‘0’ = Bit is cleared	x = Bit is unknown

bit 31 **FVBUSONIO:** USB VBUSON Selection bit
1 = VBUSON pin is controlled by the USB module
0 = VBUSON pin is controlled by the port function

bit 30 **FUSBIDIO:** USB USBID Selection bit
1 = USBID pin is controlled by the USB module
0 = USBID pin is controlled by the port function

bit 29 **IOL1WAY:** Peripheral Pin Select Configuration bit
1 = Allow only one reconfiguration
0 = Allow multiple reconfigurations

bit 28 **PMDl1WAY:** Peripheral Module Disable Configuration bit
1 = Allow only one reconfiguration
0 = Allow multiple reconfigurations

bit 27-16 **Reserved:** Write ‘1’

bit 15-0 **USERID<15:0>:** User ID bits
This is a 16-bit value that is user-defined and is readable via ICSP™ and JTAG.

REGISTER 27-5: CFGCON: CONFIGURATION CONTROL REGISTER

Bit Range	Bit 31/23/15/7	Bit 30/22/14/6	Bit 29/21/13/5	Bit 28/20/12/4	Bit 27/19/11/3	Bit 26/18/10/2	Bit 25/17/9/1	Bit 24/16/8/0
31:24	U-0	U-0	U-0	U-0	U-0	U-0	U-0	U-0
	—	—	—	—	—	—	—	—
23:16	U-0	U-0	U-0	U-0	U-0	U-0	U-0	U-0
	—	—	—	—	—	—	—	—
15:8	U-0	U-0	R/W-0	R/W-0	U-0	U-0	U-0	U-0
	—	—	IOLOCK(1)	PMDLOCK(1)	—	—	—	—
7:0	U-0	U-0	U-0	U-0	R/W-1	U-0	U-1	R/W-1
	—	—	—	—	JTAGEN	—	—	TDOEN

Legend:			
R = Readable bit	W = Writable bit	U = Unimplemented bit, read as ‘0’	
-n = Value at POR	‘1’ = Bit is set	‘0’ = Bit is cleared	x = Bit is unknown

bit 31-14 **Unimplemented:** Read as ‘0’

bit 13 **IOLOCK:** Peripheral Pin Select Lock bit(1)
1 = Peripheral Pin Select is locked. Writes to PPS registers is not allowed.
0 = Peripheral Pin Select is not locked. Writes to PPS registers is allowed.

bit 12 **PMDLOCK:** Peripheral Module Disable bit(1)
1 = Peripheral module is locked. Writes to PMD registers is not allowed.
0 = Peripheral module is not locked. Writes to PMD registers is allowed.

bit 11-4 **Unimplemented:** Read as ‘0’

bit 3 **JTAGEN:** JTAG Port Enable bit
1 = Enable the JTAG port
0 = Disable the JTAG port

bit 2-1 **Unimplemented:** Read as ‘1’

bit 0 **TDOEN:** TDO Enable for 2-Wire JTAG bit
1 = 2-wire JTAG protocol uses TDO
0 = 2-wire JTAG protocol does not use TDO

Note 1: To change this bit, the unlock sequence must be performed. Refer to **Section 6. “Oscillator”** (DS60001112) in the *“PIC32 Family Reference Manual”* for details.

© 2011-2016 Microchip Technology Inc.

REGISTER 27-6: DEVID: DEVICE AND REVISION ID REGISTER

Bit Range	Bit 31/23/15/7	Bit 30/22/14/6	Bit 29/21/13/5	Bit 28/20/12/4	Bit 27/19/11/3	Bit 26/18/10/2	Bit 25/17/9/1	Bit 24/16/8/0
31:24	R	R	R	R	R	R	R	R
	VER<3:0>(1)				DEVID<27:24>(1)			
23:16	R	R	R	R	R	R	R	R
	DEVID<23:16>(1)							
15:8	R	R	R	R	R	R	R	R
	DEVID<15:8>(1)							
7:0	R	R	R	R	R	R	R	R
	DEVID<7:0>(1)							

Legend:			
R = Readable bit	W = Writable bit	U = Unimplemented bit, read as ‘0’	
-n = Value at POR	‘1’ = Bit is set	‘0’ = Bit is cleared	x = Bit is unknown

bit 31-28 **VER<3:0>:** Revision Identifier bits(1)

bit 27-0 **DEVID<27:0>:** Device ID bits(1)

Note 1: See the *“PIC32 Flash Programming Specification”* (DS60001145) for a list of Revision and Device ID values.

27.3 On-Chip Voltage Regulator

All PIC32MX1XX/2XX 28/36/44-pin Family devices' core and digital logic are designed to operate at a nominal 1.8V. To simplify system designs, most devices in the PIC32MX1XX/2XX 28/36/44-pin Family family incorporate an on-chip regulator providing the required core logic voltage from VDD.

A low-ESR capacitor (such as tantalum) must be connected to the VCAP pin (see Figure 27-1). This helps to maintain the stability of the regulator. The recommended value for the filter capacitor is provided in **Section 30.1 "DC Characteristics"**.

Note:	It is important that the low-ESR capacitor is placed as close as possible to the VCAP pin.

27.3.1 ON-CHIP REGULATOR AND POR

It takes a fixed delay for the on-chip regulator to generate an output. During this time, designated as TPU, code execution is disabled. TPU is applied every time the device resumes operation after any power-down, including Sleep mode.

27.3.2 ON-CHIP REGULATOR AND BOR

PIC32MX1XX/2XX 28/36/44-pin Family devices also have a simple brown-out capability. If the voltage supplied to the regulator is inadequate to maintain a regulated level, the regulator Reset circuitry will generate a Brown-out Reset. This event is captured by the BOR flag bit (RCON<1>). The brown-out voltage levels are specific in **Section 30.1 "DC Characteristics"**.

FIGURE 27-1: CONNECTIONS FOR THE ON-CHIP REGULATOR

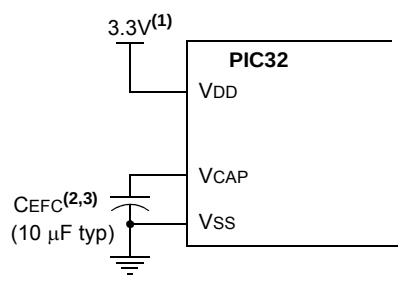

Note 1: These are typical operating voltages. Refer to **Section 30.1 "DC Characteristics"** for the full operating ranges of VDD.
2: It is important that the low-ESR capacitor is placed as close as possible to the VCAP pin.
3: The typical voltage on the VCAP pin is 1.8V.

27.4 Programming and Diagnostics

PIC32MX1XX/2XX 28/36/44-pin Family devices provide a complete range of programming and diagnostic features that can increase the flexibility of any application using them. These features allow system designers to include:

- Simplified field programmability using two-wire In-Circuit Serial Programming™ (ICSP™) interfaces
- Debugging using ICSP
- Programming and debugging capabilities using the EJTAG extension of JTAG
- JTAG boundary scan testing for device and board diagnostics

PIC32 devices incorporate two programming and diagnostic modules, and a trace controller, that provide a range of functions to the application developer.

Figure 27-2 illustrates a block diagram of the programming, debugging, and trace ports.

FIGURE 27-2: BLOCK DIAGRAM OF PROGRAMMING, DEBUGGING AND TRACE PORTS

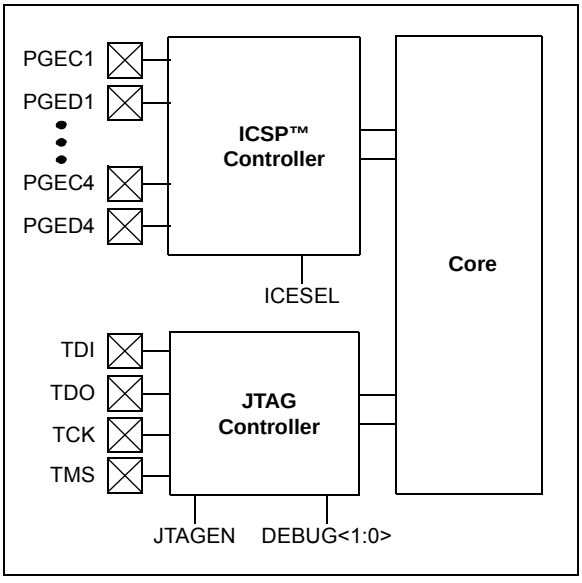

© 2011-2016 Microchip Technology Inc.

28.0 INSTRUCTION SET

The PIC32MX1XX/2XX family instruction set complies with the MIPS32® Release 2 instruction set architecture. The PIC32 device family does not support the following features:

- Core extend instructions
- Coprocessor 1 instructions
- Coprocessor 2 instructions

Note: Refer to *"MIPS32® Architecture for Programmers Volume II: The MIPS32® Instruction Set"* at www.imgtec.com for more information.

NOTES:

© 2011-2016 Microchip Technology Inc.

29.0 DEVELOPMENT SUPPORT

The PIC® microcontrollers (MCU) and dsPIC® digital signal controllers (DSC) are supported with a full range of software and hardware development tools:

- Integrated Development Environment
  - MPLAB® X IDE Software
- Compilers/Assemblers/Linkers
  - MPLAB XC Compiler
  - MPASM™ Assembler
  - MPLINK™ Object Linker/ MPLIB™ Object Librarian
  - MPLAB Assembler/Linker/Librarian for Various Device Families
- Simulators
  - MPLAB X SIM Software Simulator
- Emulators
  - MPLAB REAL ICE™ In-Circuit Emulator
- In-Circuit Debuggers/Programmers
  - MPLAB ICD 3
  - PICkit™ 3
- Device Programmers
  - MPLAB PM3 Device Programmer
- Low-Cost Demonstration/Development Boards, Evaluation Kits and Starter Kits
- Third-party development tools

29.1 MPLAB X Integrated Development Environment Software

The MPLAB X IDE is a single, unified graphical user interface for Microchip and third-party software, and hardware development tool that runs on Windows®, Linux and Mac OS® X. Based on the NetBeans IDE, MPLAB X IDE is an entirely new IDE with a host of free software components and plug-ins for high-performance application development and debugging. Moving between tools and upgrading from software simulators to hardware debugging and programming tools is simple with the seamless user interface.

With complete project management, visual call graphs, a configurable watch window and a feature-rich editor that includes code completion and context menus, MPLAB X IDE is flexible and friendly enough for new users. With the ability to support multiple tools on multiple projects with simultaneous debugging, MPLAB X IDE is also suitable for the needs of experienced users.

Feature-Rich Editor:

- Color syntax highlighting
- Smart code completion makes suggestions and provides hints as you type
- Automatic code formatting based on user-defined rules
- Live parsing

User-Friendly, Customizable Interface:

- Fully customizable interface: toolbars, toolbar buttons, windows, window placement, etc.
- Call graph window

Project-Based Workspaces:

- Multiple projects
- Multiple tools
- Multiple configurations
- Simultaneous debugging sessions

File History and Bug Tracking:

- Local file history feature
- Built-in support for Bugzilla issue tracker

29.2 MPLAB XC Compilers

The MPLAB XC Compilers are complete ANSI C compilers for all of Microchip's 8, 16, and 32-bit MCU and DSC devices. These compilers provide powerful integration capabilities, superior code optimization and ease of use. MPLAB XC Compilers run on Windows, Linux or MAC OS X.

For easy source level debugging, the compilers provide debug information that is optimized to the MPLAB X IDE.

The free MPLAB XC Compiler editions support all devices and commands, with no time or memory restrictions, and offer sufficient code optimization for most applications.

MPLAB XC Compilers include an assembler, linker and utilities. The assembler generates relocatable object files that can then be archived or linked with other relocatable object files and archives to create an executable file. MPLAB XC Compiler uses the assembler to produce its object file. Notable features of the assembler include:

- Support for the entire device instruction set
- Support for fixed-point and floating-point data
- Command-line interface
- Rich directive set
- Flexible macro language
- MPLAB X IDE compatibility

29.3 MPASM Assembler

The MPASM Assembler is a full-featured, universal macro assembler for PIC10/12/16/18 MCUs.

The MPASM Assembler generates relocatable object files for the MPLINK Object Linker, Intel® standard HEX files, MAP files to detail memory usage and symbol reference, absolute LST files that contain source lines and generated machine code, and COFF files for debugging.

The MPASM Assembler features include:

- Integration into MPLAB X IDE projects
- User-defined macros to streamline assembly code
- Conditional assembly for multipurpose source files
- Directives that allow complete control over the assembly process

29.4 MPLINK Object Linker/ MPLIB Object Librarian

The MPLINK Object Linker combines relocatable objects created by the MPASM Assembler. It can link relocatable objects from precompiled libraries, using directives from a linker script.

The MPLIB Object Librarian manages the creation and modification of library files of precompiled code. When a routine from a library is called from a source file, only the modules that contain that routine will be linked in with the application. This allows large libraries to be used efficiently in many different applications.

The object linker/library features include:

- Efficient linking of single libraries instead of many smaller files
- Enhanced code maintainability by grouping related modules together
- Flexible creation of libraries with easy module listing, replacement, deletion and extraction

29.5 MPLAB Assembler, Linker and Librarian for Various Device Families

MPLAB Assembler produces relocatable machine code from symbolic assembly language for PIC24, PIC32 and dsPIC DSC devices. MPLAB XC Compiler uses the assembler to produce its object file. The assembler generates relocatable object files that can then be archived or linked with other relocatable object files and archives to create an executable file. Notable features of the assembler include:

- Support for the entire device instruction set
- Support for fixed-point and floating-point data
- Command-line interface
- Rich directive set
- Flexible macro language
- MPLAB X IDE compatibility

© 2011-2016 Microchip Technology Inc.

29.6 MPLAB X SIM Software Simulator

The MPLAB X SIM Software Simulator allows code development in a PC-hosted environment by simulating the PIC MCUs and dsPIC DSCs on an instruction level. On any given instruction, the data areas can be examined or modified and stimuli can be applied from a comprehensive stimulus controller. Registers can be logged to files for further run-time analysis. The trace buffer and logic analyzer display extend the power of the simulator to record and track program execution, actions on I/O, most peripherals and internal registers.

The MPLAB X SIM Software Simulator fully supports symbolic debugging using the MPLAB XC Compilers, and the MPASM and MPLAB Assemblers. The software simulator offers the flexibility to develop and debug code outside of the hardware laboratory environment, making it an excellent, economical software development tool.

29.7 MPLAB REAL ICE In-Circuit Emulator System

The MPLAB REAL ICE In-Circuit Emulator System is Microchip's next generation high-speed emulator for Microchip Flash DSC and MCU devices. It debugs and programs all 8, 16 and 32-bit MCU, and DSC devices with the easy-to-use, powerful graphical user interface of the MPLAB X IDE.

The emulator is connected to the design engineer's PC using a high-speed USB 2.0 interface and is connected to the target with either a connector compatible with in-circuit debugger systems (RJ-11) or with the new high-speed, noise tolerant, Low-Voltage Differential Signal (LVDS) interconnection (CAT5).

The emulator is field upgradable through future firmware downloads in MPLAB X IDE. MPLAB REAL ICE offers significant advantages over competitive emulators including full-speed emulation, run-time variable watches, trace analysis, complex breakpoints, logic probes, a ruggedized probe interface and long (up to three meters) interconnection cables.

29.8 MPLAB ICD 3 In-Circuit Debugger System

The MPLAB ICD 3 In-Circuit Debugger System is Microchip's most cost-effective, high-speed hardware debugger/programmer for Microchip Flash DSC and MCU devices. It debugs and programs PIC Flash microcontrollers and dsPIC DSCs with the powerful, yet easy-to-use graphical user interface of the MPLAB IDE.

The MPLAB ICD 3 In-Circuit Debugger probe is connected to the design engineer's PC using a high-speed USB 2.0 interface and is connected to the target with a connector compatible with the MPLAB ICD 2 or MPLAB REAL ICE systems (RJ-11). MPLAB ICD 3 supports all MPLAB ICD 2 headers.

29.9 PICkit 3 In-Circuit Debugger/ Programmer

The MPLAB PICkit 3 allows debugging and programming of PIC and dsPIC Flash microcontrollers at a most affordable price point using the powerful graphical user interface of the MPLAB IDE. The MPLAB PICkit 3 is connected to the design engineer's PC using a full-speed USB interface and can be connected to the target via a Microchip debug (RJ-11) connector (compatible with MPLAB ICD 3 and MPLAB REAL ICE). The connector uses two device I/O pins and the Reset line to implement in-circuit debugging and In-Circuit Serial Programming™ (ICSP™).

29.10 MPLAB PM3 Device Programmer

The MPLAB PM3 Device Programmer is a universal, CE compliant device programmer with programmable voltage verification at V_{DDMIN} and V_{DDMAX} for maximum reliability. It features a large LCD display (128 x 64) for menus and error messages, and a modular, detachable socket assembly to support various package types. The ICSP cable assembly is included as a standard item. In Stand-Alone mode, the MPLAB PM3 Device Programmer can read, verify and program PIC devices without a PC connection. It can also set code protection in this mode. The MPLAB PM3 connects to the host PC via an RS-232 or USB cable. The MPLAB PM3 has high-speed communications and optimized algorithms for quick programming of large memory devices, and incorporates an MMC card for file storage and data applications.

© 2011-2016 Microchip Technology Inc.

29.11 Demonstration/Development Boards, Evaluation Kits, and Starter Kits

A wide variety of demonstration, development and evaluation boards for various PIC MCUs and dsPIC DSCs allows quick application development on fully functional systems. Most boards include prototyping areas for adding custom circuitry and provide application firmware and source code for examination and modification.

The boards support a variety of features, including LEDs, temperature sensors, switches, speakers, RS-232 interfaces, LCD displays, potentiometers and additional EEPROM memory.

The demonstration and development boards can be used in teaching environments, for prototyping custom circuits and for learning about various microcontroller applications.

In addition to the PICDEM™ and dsPICDEM™ demonstration/development board series of circuits, Microchip has a line of evaluation kits and demonstration software for analog filter design, KEELOQ® security ICs, CAN, IrDA®, PowerSmart battery management, SEEVAL® evaluation system, Sigma-Delta ADC, flow rate sensing, plus many more.

Also available are starter kits that contain everything needed to experience the specified device. This usually includes a single application and debug capability, all on one board.

Check the Microchip web page (www.microchip.com) for the complete list of demonstration, development and evaluation kits.

29.12 Third-Party Development Tools

Microchip also offers a great collection of tools from third-party vendors. These tools are carefully selected to offer good value and unique functionality.

- Device Programmers and Gang Programmers from companies, such as SoftLog and CCS
- Software Tools from companies, such as Gimpel and Trace Systems
- Protocol Analyzers from companies, such as Saleae and Total Phase
- Demonstration Boards from companies, such as MikroElektronika, Digilent® and Olimex
- Embedded Ethernet Solutions from companies, such as EZ Web Lynx, WIZnet and IPLogika®

© 2011-2016 Microchip Technology Inc.

30.0 ELECTRICAL CHARACTERISTICS

This section provides an overview of the PIC32MX1XX/2XX 28/36/44-pin Family electrical characteristics for devices that operate at 40 MHz. Refer to **Section 31.0 "50 MHz Electrical Characteristics"** for additional specifications for operations at higher frequency. Additional information will be provided in future revisions of this document as it becomes available.

Absolute maximum ratings for the PIC32MX1XX/2XX 28/36/44-pin Family devices are listed below. Exposure to these maximum rating conditions for extended periods may affect device reliability. Functional operation of the device at these or any other conditions, above the parameters indicated in the operation listings of this specification, is not implied.

Absolute Maximum Ratings

(See Note 1)

Ambient temperature under bias ..... -40°C to +105°C
Storage temperature ..... -65°C to +150°C
Voltage on V_{DD} with respect to V_{SS} ..... -0.3V to +4.0V
Voltage on any pin that is not 5V tolerant, with respect to V_{SS} **(Note 3)** ..... -0.3V to (V_{DD} + 0.3V)
Voltage on any 5V tolerant pin with respect to V_{SS} when $V_{DD} \geq 2.3V$ **(Note 3)** ..... -0.3V to +5.5V
Voltage on any 5V tolerant pin with respect to V_{SS} when $V_{DD} < 2.3V$ **(Note 3)** ..... -0.3V to +3.6V
Voltage on D+ or D- pin with respect to V_{USB3V3} ..... -0.3V to (V_{USB3V3} + 0.3V)
Voltage on V_{BUS} with respect to V_{SS} ..... -0.3V to +5.5V
Maximum current out of V_{SS} pin(s) ..... 300 mA
Maximum current into V_{DD} pin(s) **(Note 2)** ..... 300 mA
Maximum output current sunk by any I/O pin ..... 15 mA
Maximum output current sourced by any I/O pin ..... 15 mA
Maximum current sunk by all ports ..... 200 mA
Maximum current sourced by all ports **(Note 2)** ..... 200 mA

Note 1: Stresses above those listed under **"Absolute Maximum Ratings"** may cause permanent damage to the device. This is a stress rating only and functional operation of the device at those or any other conditions, above those indicated in the operation listings of this specification, is not implied. Exposure to maximum rating conditions for extended periods may affect device reliability.

2: Maximum allowable current is a function of device maximum power dissipation (see Table 30-2).

3: See the **"Pin Diagrams"** section for the 5V tolerant pins.

30.1 DC Characteristics

TABLE 30-1: OPERATING MIPS VS. VOLTAGE

Characteristic	V_{DD} Range (in Volts)(1)	Temp. Range (in °C)	Max. Frequency
			PIC32MX1XX/2XX 28/36/44-pin Family
DC5	2.3-3.6V	-40°C to +85°C	40 MHz
DC5b	2.3-3.6V	-40°C to +105°C	40 MHz

Note 1: Overall functional device operation at $V_{BORMIN} < V_{DD} < V_{DDMIN}$ is tested, but not characterized. All device Analog modules, such as ADC, etc., will function, but with degraded performance below V_{DDMIN}. Refer to parameter BO10 in Table 30-11 for BOR values.

TABLE 30-2: THERMAL OPERATING CONDITIONS

Rating	Symbol	Min.	Typical	Max.	Unit
Industrial Temperature Devices					
Operating Junction Temperature Range	T_J	-40	—	+125	°C
Operating Ambient Temperature Range	T_A	-40	—	+85	°C
V-temp Temperature Devices					
Operating Junction Temperature Range	T_J	-40	—	+140	°C
Operating Ambient Temperature Range	T_A	-40	—	+105	°C
Power Dissipation: Internal Chip Power Dissipation: $P_{INT} = V_{DD} \times (I_{DD} - S\ I_{OH})$ I/O Pin Power Dissipation: $I/O = S\ (\{V_{DD} - V_{OH}\} \times I_{OH}) + S\ (V_{OL} \times I_{OL})$	P_D	$P_{INT} + P_{I/O}$			W
Maximum Allowed Power Dissipation	P_{DMAX}	$(T_J - T_A)/\theta_{JA}$			W

TABLE 30-3: THERMAL PACKAGING CHARACTERISTICS

Characteristics	Symbol	Typical	Max.	Unit	Notes
Package Thermal Resistance, 28-pin SSOP	θ_{JA}	71	—	°C/W	**1**
Package Thermal Resistance, 28-pin SOIC	θ_{JA}	50	—	°C/W	**1**
Package Thermal Resistance, 28-pin SPDIP	θ_{JA}	42	—	°C/W	**1**
Package Thermal Resistance, 28-pin QFN	θ_{JA}	35	—	°C/W	**1**
Package Thermal Resistance, 36-pin VTLA	θ_{JA}	31	—	°C/W	**1**
Package Thermal Resistance, 44-pin QFN	θ_{JA}	32	—	°C/W	**1**
Package Thermal Resistance, 44-pin TQFP	θ_{JA}	45	—	°C/W	**1**
Package Thermal Resistance, 44-pin VTLA	θ_{JA}	30	—	°C/W	**1**

Note 1: Junction to ambient thermal resistance, Theta-JA (θ_{JA}) numbers are achieved by package simulations.

© 2011-2016 Microchip Technology Inc.

TABLE 30-4: DC TEMPERATURE AND VOLTAGE SPECIFICATIONS

DC CHARACTERISTICS			Standard Operating Conditions: 2.3V to 3.6V (unless otherwise stated) Operating temperature -40°C ≤ TA ≤ +85°C for Industrial -40°C ≤ TA ≤ +105°C for V-temp				
Param. No.	**Symbol**	**Characteristics**	**Min.**	**Typ.**	**Max.**	**Units**	**Conditions**
Operating Voltage							
DC10	VDD	**Supply Voltage (Note 2)**	2.3	—	3.6	V	—
DC12	VDR	**RAM Data Retention Voltage (Note 1)**	1.75	—	—	V	—
DC16	VPOR	**VDD Start Voltage** to Ensure Internal Power-on Reset Signal	1.75	—	2.1	V	—
DC17	SVDD	**VDD Rise Rate** to Ensure Internal Power-on Reset Signal	0.00005	—	0.115	V/μs	—

Note 1: This is the limit to which VDD can be lowered without losing RAM data.

2: Overall functional device operation at VBORMIN < VDD < VDDMIN is tested, but not characterized. All device Analog modules, such as ADC, etc., will function, but with degraded performance below VDDMIN. Refer to parameter BO10 in Table 30-11 for BOR values.

TABLE 30-5: DC CHARACTERISTICS: OPERATING CURRENT (IDD)

DC CHARACTERISTICS			Standard Operating Conditions: 2.3V to 3.6V (unless otherwise stated) Operating temperature -40°C ≤ TA ≤ +85°C for Industrial -40°C ≤ TA ≤ +105°C for V-temp		
Parameter No.	**Typical(3)**	**Max.**	**Units**	**Conditions**	
Operating Current (IDD) (Notes 1, 2, 5)					
DC20	2	3	mA	4 MHz **(Note 4)**	
DC21	7	10.5	mA	10 MHz	
DC22	10	15	mA	20 MHz **(Note 4)**	
DC23	15	23	mA	30 MHz **(Note 4)**	
DC24	20	30	mA	40 MHz	
DC25	100	150	μA	+25ºC, 3.3V	LPRC (31 kHz) **(Note 4)**

Note 1: A device's IDD supply current is mainly a function of the operating voltage and frequency. Other factors, such as PBCLK (Peripheral Bus Clock) frequency, number of peripheral modules enabled, internal code execution pattern, execution from Program Flash memory vs. SRAM, I/O pin loading and switching rate, oscillator type, as well as temperature, can have an impact on the current consumption.

2: The test conditions for IDD measurements are as follows:

- Oscillator mode is EC (for 8 MHz and below) and EC+PLL (for above 8 MHz) with OSC1 driven by external square wave from rail-to-rail, (OSC1 input clock input over/undershoot < 100 mV required)
- OSC2/CLKO is configured as an I/O input pin
- USB PLL oscillator is disabled if the USB module is implemented, PBCLK divisor = 1:8
- CPU, Program Flash, and SRAM data memory are operational, SRAM data memory Wait states = `1`
- No peripheral modules are operating, (ON bit = `0`), but the associated PMD bit is cleared
- WDT, Clock Switching, Fail-Safe Clock Monitor, and Secondary Oscillator are disabled
- All I/O pins are configured as inputs and pulled to VSS
- $\overline{\text{MCLR}}$ = VDD
- CPU executing `while(1)` statement from Flash
- RTCC and JTAG are disabled

3: Data in "Typical" column is at 3.3V, 25°C at specified operating frequency unless otherwise stated. Parameters are for design guidance only and are not tested.

4: This parameter is characterized, but not tested in manufacturing.

5: IPD electrical characteristics for devices with 256 KB Flash are only provided as Preliminary information.

© 2011-2016 Microchip Technology Inc.

TABLE 30-6: DC CHARACTERISTICS: IDLE CURRENT (I_{IDLE})

DC CHARACTERISTICS			Standard Operating Conditions: 2.3V to 3.6V (unless otherwise stated) Operating temperature -40°C ≤ TA ≤ +85°C for Industrial -40°C ≤ TA ≤ +105°C for V-temp			
Parameter No.	**Typical(2)**	**Max.**	**Units**	**Conditions**		
Idle Current (I_{IDLE}): Core Off, Clock on Base Current (Notes 1, 4)						
DC30a	1	1.5	mA	4 MHz **(Note 3)**		
DC31a	2	3	mA	10 MHz		
DC32a	4	6	mA	20 MHz **(Note 3)**		
DC33a	5.5	8	mA	30 MHz **(Note 3)**		
DC34a	7.5	11	mA	40 MHz		
DC37a	100	—	µA	-40°C	3.3V	LPRC (31 kHz) **(Note 3)**
DC37b	250	—	µA	+25°C		
DC37c	380	—	µA	+85°C		

Note 1: The test conditions for I_{IDLE} current measurements are as follows:

- Oscillator mode is EC (for 8 MHz and below) and EC+PLL (for above 8 MHz) with OSC1 driven by external square wave from rail-to-rail, (OSC1 input clock input over/undershoot < 100 mV required)
- OSC2/CLKO is configured as an I/O input pin
- USB PLL oscillator is disabled if the USB module is implemented, PBCLK divisor = 1:8
- CPU is in Idle mode (CPU core Halted), and SRAM data memory Wait states = 1
- No peripheral modules are operating, (ON bit = 0), but the associated PMD bit is cleared
- WDT, Clock Switching, Fail-Safe Clock Monitor, and Secondary Oscillator are disabled
- All I/O pins are configured as inputs and pulled to V_{SS}
- $\overline{MCLR}$ = V_{DD}
- RTCC and JTAG are disabled

2: Data in the “Typical” column is at 3.3V, 25°C unless otherwise stated. Parameters are for design guidance only and are not tested.

3: This parameter is characterized, but not tested in manufacturing.

4: I_{IDLE} electrical characteristics for devices with 256 KB Flash are only provided as Preliminary information.

TABLE 30-7: DC CHARACTERISTICS: POWER-DOWN CURRENT (I_{PD})

DC CHARACTERISTICS			Standard Operating Conditions: 2.3V to 3.6V (unless otherwise stated) Operating temperature -40°C ≤ TA ≤ +85°C for Industrial -40°C ≤ TA ≤ +105°C for V-temp		
Param. No.	**Typical(2)**	**Max.**	**Units**	**Conditions**	
Power-Down Current (I_{PD}) (Notes 1, 5)					
DC40k	44	70	μA	-40°C	Base Power-Down Current
DC40l	44	70	μA	+25°C	
DC40n	168	259	μA	+85°C	
DC40m	335	536	μA	+105ºC	
Module Differential Current					
DC41e	5	20	μA	3.6V	Watchdog Timer Current: ΔI_{WDT} **(Note 3)**
DC42e	23	50	μA	3.6V	RTCC + Timer1 w/32 kHz Crystal: ΔI_{RTCC} **(Note 3)**
DC43d	1000	1100	μA	3.6V	ADC: ΔI_{ADC} **(Notes 3,4)**

Note 1: The test conditions for I_{PD} current measurements are as follows:
- Oscillator mode is EC (for 8 MHz and below) and EC+PLL (for above 8 MHz) with OSC1 driven by external square wave from rail-to-rail, (OSC1 input clock input over/undershoot < 100 mV required)
- OSC2/CLKO is configured as an I/O input pin
- USB PLL oscillator is disabled if the USB module is implemented, PBCLK divisor = 1:8
- CPU is in Sleep mode, and SRAM data memory Wait states = 1
- No peripheral modules are operating, (ON bit = 0), but the associated PMD bit is set
- WDT, Clock Switching, Fail-Safe Clock Monitor, and Secondary Oscillator are disabled
- All I/O pins are configured as inputs and pulled to V_{SS}
- $\overline{MCLR}$ = V_{DD}
- RTCC and JTAG are disabled

2: Data in the “Typical” column is at 3.3V, 25°C unless otherwise stated. Parameters are for design guidance only and are not tested.

3: The Δ current is the additional current consumed when the module is enabled. This current should be added to the base I_{PD} current.

4: Test conditions for ADC module differential current are as follows: Internal ADC RC oscillator enabled.

5: I_{PD} electrical characteristics for devices with 256 KB Flash are only provided as Preliminary information.

© 2011-2016 Microchip Technology Inc.

TABLE 30-8: DC CHARACTERISTICS: I/O PIN INPUT SPECIFICATIONS

DC CHARACTERISTICS			Standard Operating Conditions: 2.3V to 3.6V (unless otherwise stated) Operating temperature -40°C ≤ TA ≤ +85°C for Industrial -40°C ≤ TA ≤ +105°C for V-temp				
Param. No.	**Symbol**	**Characteristics**	**Min.**	**Typical(1)**	**Max.**	**Units**	**Conditions**
	VIL	**Input Low Voltage**					
DI10		I/O Pins with PMP	VSS	—	0.15 VDD	V	
		I/O Pins	VSS	—	0.2 VDD	V	
DI18		SDAx, SCLx	VSS	—	0.3 VDD	V	SMBus disabled **(Note 4)**
DI19		SDAx, SCLx	VSS	—	0.8	V	SMBus enabled **(Note 4)**
	VIH	**Input High Voltage**					
DI20		I/O Pins not 5V-tolerant(5)	0.65 VDD	—	VDD	V	**(Note 4,6)**
		I/O Pins 5V-tolerant with PMP(5)	0.25 VDD + 0.8V	—	5.5	V	**(Note 4,6)**
		I/O Pins 5V-tolerant(5)	0.65 VDD	—	5.5	V	
DI28		SDAx, SCLx	0.65 VDD	—	5.5	V	SMBus disabled **(Note 4,6)**
DI29		SDAx, SCLx	2.1	—	5.5	V	SMBus enabled, 2.3V ≤ VPIN ≤ 5.5 **(Note 4,6)**
DI30	ICNPU	**Change Notification Pull-up Current**	—	—	-50	μA	VDD = 3.3V, VPIN = VSS **(Note 3,6)**
DI31	ICNPD	**Change Notification Pull-down Current(4)**	—	—	-50	μA	VDD = 3.3V, VPIN = VDD
	IIL	**Input Leakage Current (Note 3)**					
DI50		I/O Ports	—	—	±1	μA	VSS ≤ VPIN ≤ VDD, Pin at high-impedance
DI51		Analog Input Pins	—	—	±1	μA	VSS ≤ VPIN ≤ VDD, Pin at high-impedance
DI55		$\overline{\text{MCLR}}$(2)	—	—	±1	μA	VSS ≤ VPIN ≤ VDD
DI56		OSC1	—	—	±1	μA	VSS ≤ VPIN ≤ VDD, XT and HS modes

Note 1: Data in "Typical" column is at 3.3V, 25°C unless otherwise stated. Parameters are for design guidance only and are not tested.

2: The leakage current on the $\overline{\text{MCLR}}$ pin is strongly dependent on the applied voltage level. The specified levels represent normal operating conditions. Higher leakage current may be measured at different input voltages.

3: Negative current is defined as current sourced by the pin.

4: This parameter is characterized, but not tested in manufacturing.

5: See the **"Pin Diagrams"** section for the 5V-tolerant pins.

6: The VIH specifications are only in relation to externally applied inputs, and not with respect to the user-selectable internal pull-ups. External open drain input signals utilizing the internal pull-ups of the PIC32 device are guaranteed to be recognized only as a logic "high" internally to the PIC32 device, provided that the external load does not exceed the minimum value of ICNPU. For External "input" logic inputs that require a pull-up source, to guarantee the minimum VIH of those components, it is recommended to use an external pull-up resistor rather than the internal pull-ups of the PIC32 device.

TABLE 30-9: DC CHARACTERISTICS: I/O PIN INPUT INJECTION CURRENT SPECIFICATIONS

DC CHARACTERISTICS			Standard Operating Conditions: 2.3V to 3.6V (unless otherwise stated) Operating temperature -40°C ≤ TA ≤ +85°C for Industrial -40°C ≤ TA ≤ +105°C for V-temp				
Param. No.	**Symbol**	**Characteristics**	**Min.**	**Typ.(1)**	**Max.**	**Units**	**Conditions**
DI60a	I_{ICL}	**Input Low Injection Current**	0	—	-5(2,5)	mA	This parameter applies to all pins, with the exception of the power pins.
DI60b	I_{ICH}	**Input High Injection Current**	0	—	+5(3,4,5)	mA	This parameter applies to all pins, with the exception of all 5V tolerant pins, and the SOSCI, SOSCO, OSC1, D+, and D- pins.
DI60c	$\sum I_{ICT}$	**Total Input Injection Current (sum of all I/O and Control pins)**	-20(6)	—	+20(6)	mA	Absolute instantaneous sum of all ± input injection currents from all I/O pins (| I_{ICL} + | I_{ICH} |) ≤ $\sum I_{ICT}$)

Note 1: Data in “Typical” column is at 3.3V, +25°C unless otherwise stated. Parameters are for design guidance only and are not tested.

2: V_{IL} source < (V_{SS} - 0.3). Characterized but not tested.

3: V_{IH} source > (V_{DD} + 0.3) for non-5V tolerant pins only.

4: Digital 5V tolerant pins do not have an internal high side diode to V_{DD}, and therefore, cannot tolerate any “positive” input injection current.

5: Injection currents > | 0 | can affect the ADC results by approximately 4 to 6 counts (i.e., V_{IH} Source > (V_{DD} + 0.3) or V_{IL} source < (V_{SS} - 0.3)).

6: Any number and/or combination of I/O pins not excluded under I_{ICL} or I_{ICH} conditions are permitted provided the “absolute instantaneous” sum of the input injection currents from all pins do not exceed the specified limit. If **Note 2**, I_{ICL} = (((Vss - 0.3) - V_{IL} source) / Rs). If **Note 3**, I_{ICH} = ((I_{ICH} source - (V_{DD} + 0.3)) / RS). RS = Resistance between input source voltage and device pin. If (V_{SS} - 0.3) ≤ V_{SOURCE} ≤ (V_{DD} + 0.3), injection current = 0.

© 2011-2016 Microchip Technology Inc.

TABLE 30-10: DC CHARACTERISTICS: I/O PIN OUTPUT SPECIFICATIONS

DC CHARACTERISTICS			Standard Operating Conditions: 2.3V to 3.6V (unless otherwise stated) Operating temperature -40°C ≤ TA ≤ +85°C for Industrial -40°C ≤ TA ≤ +105°C for V-temp				
Param.	**Symbol**	**Characteristic**	**Min.**	**Typ.**	**Max.**	**Units**	**Conditions**
DO10	VOL	**Output Low Voltage** I/O Pins	—	—	0.4	V	IOL ≤ 10 mA, VDD = 3.3V
DO20	VOH	**Output High Voltage** I/O Pins	1.5(1)	—	—	V	IOH ≥ -14 mA, VDD = 3.3V
			2.0(1)	—	—		IOH ≥ -12 mA, VDD = 3.3V
			2.4	—	—		IOH ≥ -10 mA, VDD = 3.3V
			3.0(1)	—	—		IOH ≥ -7 mA, VDD = 3.3V

Note 1: Parameters are characterized, but not tested.

TABLE 30-11: ELECTRICAL CHARACTERISTICS: BOR

DC CHARACTERISTICS			Standard Operating Conditions: 2.3V to 3.6V (unless otherwise stated) Operating temperature -40°C ≤ TA ≤ +85°C for Industrial -40°C ≤ TA ≤ +105°C for V-temp				
Param. No.	**Symbol**	**Characteristics**	**Min.(1)**	**Typical**	**Max.**	**Units**	**Conditions**
BO10	VBOR	BOR Event on VDD transition high-to-low(2)	2.0	—	2.3	V	—

Note 1: Parameters are for design guidance only and are not tested in manufacturing.

2: Overall functional device operation at VBORMIN < VDD < VDDMIN is tested, but not characterized. All device Analog modules, such as ADC, etc., will function, but with degraded performance below VDDMIN.

TABLE 30-12: DC CHARACTERISTICS: PROGRAM MEMORY

DC CHARACTERISTICS			Standard Operating Conditions: 2.3V to 3.6V (unless otherwise stated) Operating temperature -40°C ≤ TA ≤ +85°C for Industrial -40°C ≤ TA ≤ +105°C for V-temp				
Param. No.	**Symbol**	**Characteristics**	**Min.**	**Typical(1)**	**Max.**	**Units**	**Conditions**
		Program Flash Memory(3)					
D130	EP	Cell Endurance	20,000	—	—	E/W	—
D131	VPR	VDD for Read	2.3	—	3.6	V	—
D132	VPEW	VDD for Erase or Write	2.3	—	3.6	V	—
D134	TRETD	Characteristic Retention	20	—	—	Year	Provided no other specifications are violated
D135	IDDP	Supply Current during Programming	—	10	—	mA	—
	TWW	Word Write Cycle Time	—	411	—	FRC Cycles	See **Note 4**
D136	TRW	Row Write Cycle Time	—	6675	—	FRC Cycles	See **Note 2,4**
D137	TPE	Page Erase Cycle Time	—	20011	—	FRC Cycles	See **Note 4**
	TCE	Chip Erase Cycle Time	—	80180	—	FRC Cycles	See **Note 4**

Note 1: Data in “Typical” column is at 3.3V, 25°C unless otherwise stated.

2: The minimum SYSCLK for row programming is 4 MHz. Care should be taken to minimize bus activities during row programming, such as suspending any memory-to-memory DMA operations. If heavy bus loads are expected, selecting Bus Matrix Arbitration mode 2 (rotating priority) may be necessary. The default Arbitration mode is mode 1 (CPU has lowest priority).

3: Refer to the *“PIC32 Flash Programming Specification”* (DS60001145) for operating conditions during programming and erase cycles.

4: This parameter depends on FRC accuracy (See Table 30-19) and FRC tuning values (See Register 8-2).

© 2011-2016 Microchip Technology Inc.

TABLE 30-13: COMPARATOR SPECIFICATIONS

DC CHARACTERISTICS			Standard Operating Conditions (see Note 4): 2.3V to 3.6V (unless otherwise stated) Operating temperature -40°C ≤ TA ≤ +85°C for Industrial -40°C ≤ TA ≤ +105°C for V-temp				
Param. No.	**Symbol**	**Characteristics**	**Min.**	**Typical**	**Max.**	**Units**	**Comments**
D300	VIOFF	Input Offset Voltage	—	±7.5	±25	mV	AVDD = VDD, AVSS = VSS
D301	VICM	Input Common Mode Voltage	0	—	VDD	V	AVDD = VDD, AVSS = VSS **(Note 2)**
D302	CMRR	Common Mode Rejection Ratio	55	—	—	dB	Max VICM = (VDD - 1)V **(Note 2)**
D303A	TRESP	Large Signal Response Time	—	150	400	ns	AVDD = VDD, AVSS = VSS **(Note 1,2)**
D303B	TSRESP	Small Signal Response Time	—	1	—	μs	This is defined as an input step of 50 mV with 15 mV of overdrive **(Note 2)**
D304	ON2OV	Comparator Enabled to Output Valid	—	—	10	μs	Comparator module is configured before setting the comparator ON bit **(Note 2)**
D305	IVREF	Internal Voltage Reference	1.14	1.2	1.26	V	—
D312	TSET	Internal Comparator Voltage DRC Reference Setting time	—	—	10	μs	**(Note 3)**

Note 1: Response time measured with one comparator input at (VDD – 1.5)/2, while the other input transitions from VSS to VDD.

2: These parameters are characterized but not tested.

3: Settling time measured while CVRR = 1 and CVR<3:0> transitions from ‘0000’ to ‘1111’. This parameter is characterized, but not tested in manufacturing.

4: The Comparator module is functional at VBORMIN < VDD < VDDMIN, but with degraded performance. Unless otherwise stated, module functionality is tested, but not characterized.

TABLE 30-14: COMPARATOR VOLTAGE REFERENCE SPECIFICATIONS

DC CHARACTERISTICS			Standard Operating Conditions: 2.3V to 3.6V (unless otherwise stated) Operating temperature -40°C ≤ TA ≤ +85°C for Industrial -40°C ≤ TA ≤ +105°C for V-temp				
Param. No.	**Symbol**	**Characteristics**	**Min.**	**Typ.**	**Max.**	**Units**	**Comments**
D312	TSET	Internal 4-bit DAC Comparator Reference Settling time	—	—	10	μs	See **Note 1**
D313	DACREFH	CVREF Input Voltage Reference Range	AVSS	—	AVDD	V	CVRSRC with CVRSS = 0
			VREF-	—	VREF+	V	CVRSRC with CVRSS = 1
D314	DVREF	CVREF Programmable Output Range	0	—	0.625 x DACREFH	V	0 to 0.625 DACREFH with DACREFH/24 step size
			0.25 x DACREFH	—	0.719 x DACREFH	V	0.25 x DACREFH to 0.719 DACREFH with DACREFH/32 step size
D315	DACRES	Resolution	—	—	DACREFH/24	—	CVRCON<CVRR> = 1
			—	—	DACREFH/32	—	CVRCON<CVRR> = 0
D316	DACACC	Absolute Accuracy(2)	—	—	1/4	LSB	DACREFH/24, CVRCON<CVRR> = 1
			—	—	1/2	LSB	DACREFH/32, CVRCON<CVRR> = 0

Note 1: Settling time was measured while CVRR = 1 and CVR<3:0> transitions from '0000' to '1111'. This parameter is characterized, but is not tested in manufacturing.

2: These parameters are characterized but not tested.

TABLE 30-15: INTERNAL VOLTAGE REGULATOR SPECIFICATIONS

DC CHARACTERISTICS			Standard Operating Conditions: 2.3V to 3.6V (unless otherwise stated) Operating temperature -40°C ≤ TA ≤ +85°C for Industrial -40°C ≤ TA ≤ +105°C for V-temp				
Param. No.	**Symbol**	**Characteristics**	**Min.**	**Typical**	**Max.**	**Units**	**Comments**
D321	CEFC	External Filter Capacitor Value	8	10	—	μF	Capacitor must be low series resistance (1 ohm). Typical voltage on the VCAP pin is 1.8V.

© 2011-2016 Microchip Technology Inc.

30.2 AC Characteristics and Timing Parameters

The information contained in this section defines PIC32MX1XX/2XX 28/36/44-pin Family AC characteristics and timing parameters.

FIGURE 30-1: LOAD CONDITIONS FOR DEVICE TIMING SPECIFICATIONS

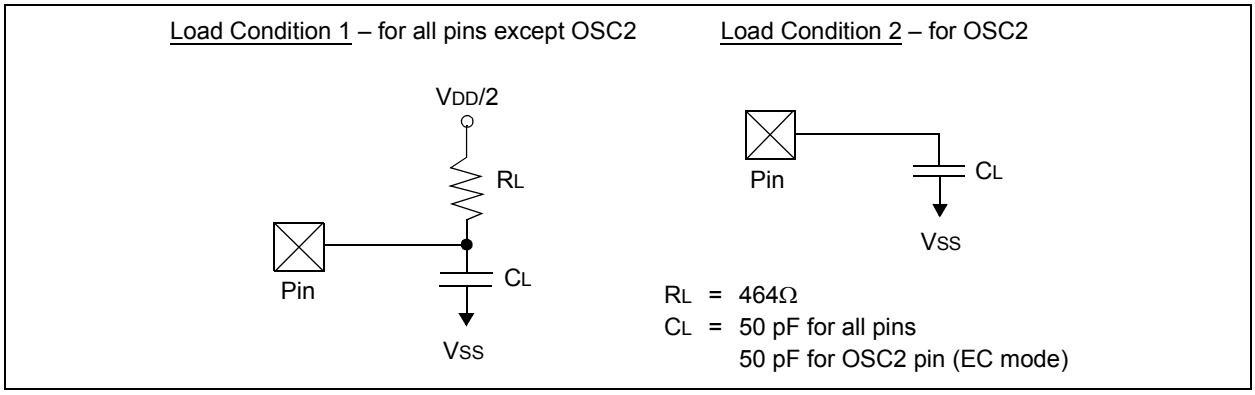

TABLE 30-16: CAPACITIVE LOADING REQUIREMENTS ON OUTPUT PINS

AC CHARACTERISTICS			Standard Operating Conditions: 2.3V to 3.6V (unless otherwise stated) Operating temperature -40°C ≤ TA ≤ +85°C for Industrial -40°C ≤ TA ≤ +105°C for V-temp				
Param. No.	**Symbol**	**Characteristics**	**Min.**	**Typical(1)**	**Max.**	**Units**	**Conditions**
DO56	CIO	All I/O pins and OSC2	—	—	50	pF	EC mode
DO58	CB	SCLx, SDAx	—	—	400	pF	In I^2C mode

Note 1: Data in "Typical" column is at 3.3V, 25°C unless otherwise stated. Parameters are for design guidance only and are not tested.

FIGURE 30-2: EXTERNAL CLOCK TIMING

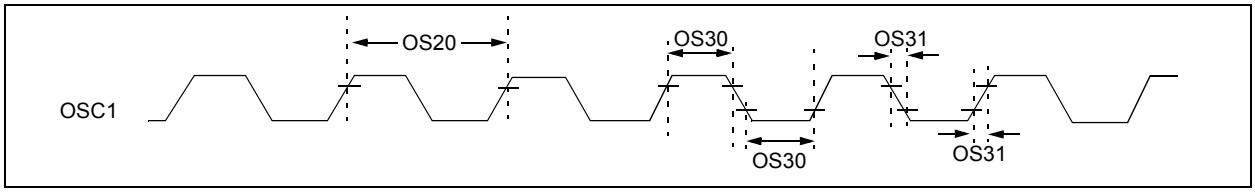

TABLE 30-17: EXTERNAL CLOCK TIMING REQUIREMENTS

AC CHARACTERISTICS			Standard Operating Conditions: 2.3V to 3.6V (unless otherwise stated) Operating temperature -40°C ≤ TA ≤ +85°C for Industrial -40°C ≤ TA ≤ +105°C for V-temp				
Param. No.	**Symbol**	**Characteristics**	**Min.**	**Typical(1)**	**Max.**	**Units**	**Conditions**
OS10	FOSC	External CLKI Frequency (External clocks allowed only in EC and ECPLL modes)	DC 4	— —	40 40	MHz MHz	EC **(Note 4)** ECPLL **(Note 3)**
OS11		Oscillator Crystal Frequency	3	—	10	MHz	XT **(Note 4)**
OS12			4	—	10	MHz	XTPLL **(Notes 3,4)**
OS13			10	—	25	MHz	HS **(Note 5)**
OS14			10	—	25	MHz	HSPLL **(Notes 3,4)**
OS15			32	32.768	100	kHz	SOSC **(Note 4)**
OS20	TOSC	TOSC = 1/FOSC = TCY **(Note 2)**	—	—	—	—	See parameter OS10 for FOSC value
OS30	TOSL, TOSH	External Clock In (OSC1) High or Low Time	0.45 x TOSC	—	—	ns	EC **(Note 4)**
OS31	TOSR, TOSF	External Clock In (OSC1) Rise or Fall Time	—	—	0.05 x TOSC	ns	EC **(Note 4)**
OS40	TOST	Oscillator Start-up Timer Period (Only applies to HS, HSPLL, XT, XTPLL and SOSC Clock Oscillator modes)	—	1024	—	TOSC	**(Note 4)**
OS41	TFSCM	Primary Clock Fail Safe Time-out Period	—	2	—	ms	**(Note 4)**
OS42	GM	External Oscillator Transconductance (Primary Oscillator only)	—	12	—	mA/V	VDD = 3.3V, TA = +25°C **(Note 4)**

Note 1: Data in “Typical” column is at 3.3V, 25°C unless otherwise stated. Parameters are characterized but are not tested.

2: Instruction cycle period (TCY) equals the input oscillator time base period. All specified values are based on characterization data for that particular oscillator type under standard operating conditions with the device executing code. Exceeding these specified limits may result in an unstable oscillator operation and/or higher than expected current consumption. All devices are tested to operate at “min.” values with an external clock applied to the OSC1/CLKI pin.

3: PLL input requirements: 4 MHz ≤ FPLLIN ≤ 5 MHz (use PLL prescaler to reduce FOSC). This parameter is characterized, but tested at 10 MHz only at manufacturing.

4: This parameter is characterized, but not tested in manufacturing.

© 2011-2016 Microchip Technology Inc.

TABLE 30-18: PLL CLOCK TIMING SPECIFICATIONS

AC CHARACTERISTICS			Standard Operating Conditions: 2.3V to 3.6V (unless otherwise stated) Operating temperature -40°C ≤ TA ≤ +85°C for Industrial -40°C ≤ TA ≤ +105°C for V-temp				
Param. No.	**Symbol**	**Characteristics(1)**	**Min.**	**Typical**	**Max.**	**Units**	**Conditions**
OS50	FPLLI	PLL Voltage Controlled Oscillator (VCO) Input Frequency Range	3.92	—	5	MHz	ECPLL, HSPLL, XTPLL, FRCPLL modes
OS51	FSYS	On-Chip VCO System Frequency	60	—	120	MHz	—
OS52	TLOCK	PLL Start-up Time (Lock Time)	—	—	2	ms	—
OS53	DCLK	CLKO Stability(2) (Period Jitter or Cumulative)	-0.25	—	+0.25	%	Measured over 100 ms period

Note 1: These parameters are characterized, but not tested in manufacturing.

2: This jitter specification is based on clock-cycle by clock-cycle measurements. To get the effective jitter for individual time-bases on communication clocks, use the following formula:

$$EffectiveJitter = \frac{D_{CLK}}{\sqrt{\frac{SYSCLK}{CommunicationClock}}}$$

For example, if SYSCLK = 40 MHz and SPI bit rate = 20 MHz, the effective jitter is as follows:

$$EffectiveJitter = \frac{D_{CLK}}{\sqrt{\frac{40}{20}}} = \frac{D_{CLK}}{1.41}$$

TABLE 30-19: INTERNAL FRC ACCURACY

AC CHARACTERISTICS		Standard Operating Conditions: 2.3V to 3.6V (unless otherwise stated) Operating temperature -40°C ≤ TA ≤ +85°C for Industrial -40°C ≤ TA ≤ +105°C for V-temp				
Param. No.	**Characteristics**	**Min.**	**Typical**	**Max.**	**Units**	**Conditions**
Internal FRC Accuracy @ 8.00 MHz(1)						
F20b	FRC	-0.9	—	+0.9	%	—

Note 1: Frequency calibrated at 25°C and 3.3V. The TUN bits can be used to compensate for temperature drift.

TABLE 30-20: INTERNAL LPRC ACCURACY

AC CHARACTERISTICS		Standard Operating Conditions: 2.3V to 3.6V (unless otherwise stated) Operating temperature -40°C ≤ TA ≤ +85°C for Industrial -40°C ≤ TA ≤ +105°C for V-temp				
Param. No.	**Characteristics**	**Min.**	**Typical**	**Max.**	**Units**	**Conditions**
LPRC @ 31.25 kHz(1)						
F21	LPRC	-15	—	+15	%	—

Note 1: Change of LPRC frequency as VDD changes.

FIGURE 30-3: I/O TIMING CHARACTERISTICS

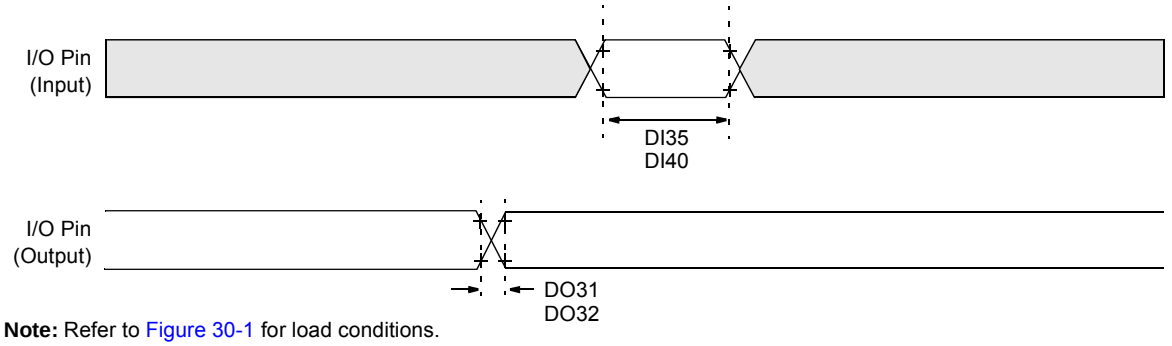

Note: Refer to Figure 30-1 for load conditions.

TABLE 30-21: I/O TIMING REQUIREMENTS

AC CHARACTERISTICS			Standard Operating Conditions: 2.3V to 3.6V (unless otherwise stated) Operating temperature -40°C ≤ TA ≤ +85°C for Industrial -40°C ≤ TA ≤ +105°C for V-temp				
Param. No.	**Symbol**	**Characteristics(2)**	**Min.**	**Typical(1)**	**Max.**	**Units**	**Conditions**
DO31	TIOR	Port Output Rise Time	—	5	15	ns	VDD < 2.5V
			—	5	10	ns	VDD > 2.5V
DO32	TIOF	Port Output Fall Time	—	5	15	ns	VDD < 2.5V
			—	5	10	ns	VDD > 2.5V
DI35	TINP	INTx Pin High or Low Time	10	—	—	ns	—
DI40	TRBP	CNx High or Low Time (input)	2	—	—	TSYSCLK	—

Note 1: Data in “Typical” column is at 3.3V, 25°C unless otherwise stated.

2: This parameter is characterized, but not tested in manufacturing.

© 2011-2016 Microchip Technology Inc.

FIGURE 30-4: POWER-ON RESET TIMING CHARACTERISTICS

Internal Voltage Regulator Enabled
Clock Sources = (FRC, FRCDIV, FRCDIV16, FRCPLL, EC, ECPLL and LPRC)

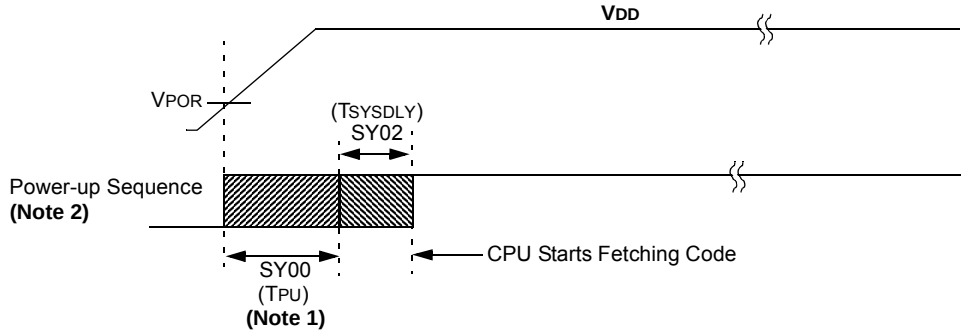

Internal Voltage Regulator Enabled
Clock Sources = (HS, HSPLL, XT, XTPLL and SOSC)

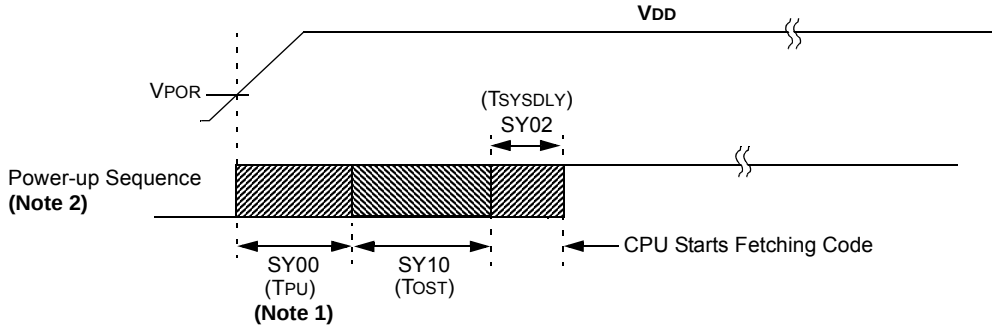

Note 1: The power-up period will be extended if the power-up sequence completes before the device exits from BOR ($V_{DD} < V_{DDMIN}$).

2: Includes interval voltage regulator stabilization delay.

FIGURE 30-5: EXTERNAL RESET TIMING CHARACTERISTICS

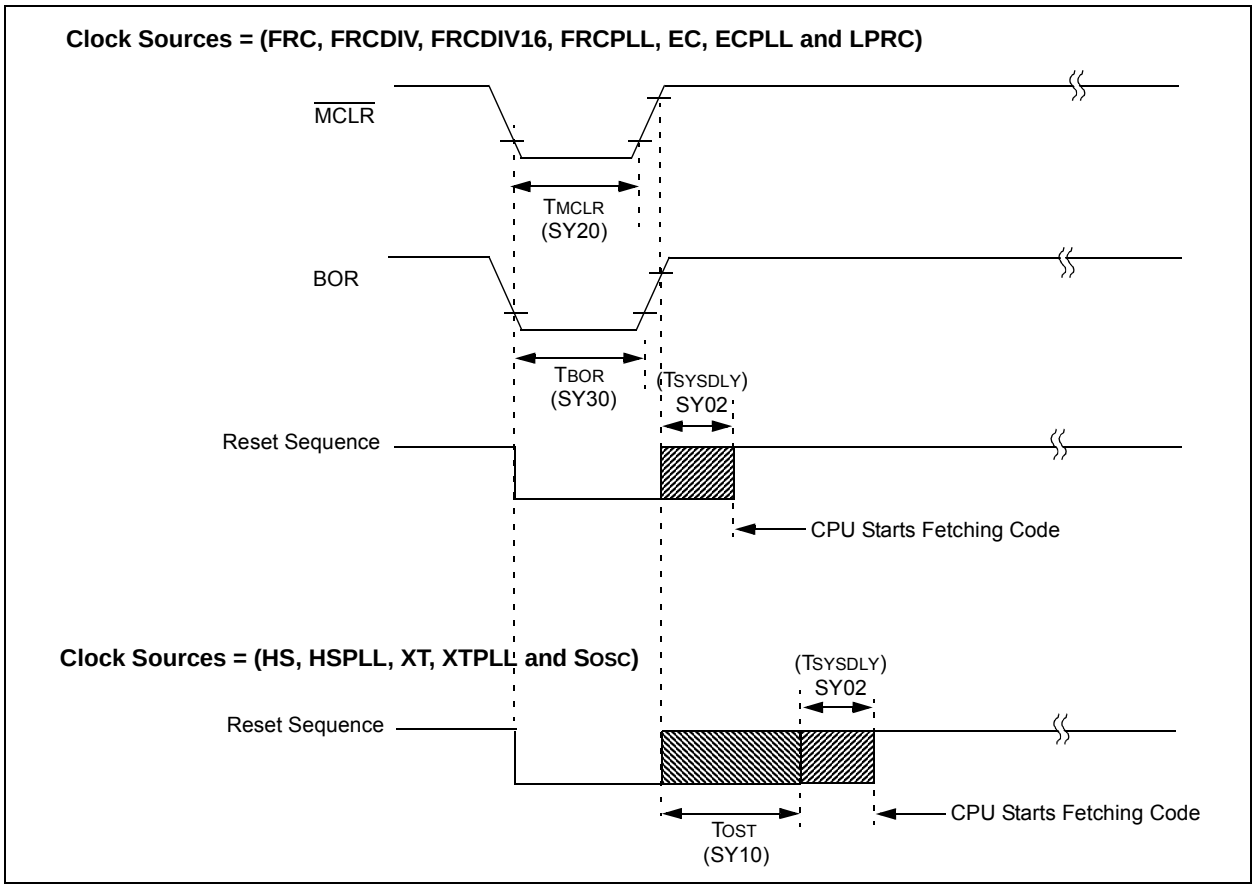

TABLE 30-22: RESETS TIMING

AC CHARACTERISTICS			Standard Operating Conditions: 2.3V to 3.6V (unless otherwise stated) Operating temperature -40°C ≤ TA ≤ +85°C for Industrial -40°C ≤ TA ≤ +105°C for V-temp				
Param. No.	**Symbol**	**Characteristics(1)**	**Min.**	**Typical(2)**	**Max.**	**Units**	**Conditions**
SY00	TPU	Power-up Period Internal Voltage Regulator Enabled	—	400	600	μs	—
SY02	TSYSDLY	System Delay Period: Time Required to Reload Device Configuration Fuses plus SYSCLK Delay before First instruction is Fetched.	—	1 μs + 8 SYSCLK cycles	—	—	—
SY20	TMCLR	$\overline{\text{MCLR}}$ Pulse Width (low)	2	—	—	μs	—
SY30	TBOR	BOR Pulse Width (low)	—	1	—	μs	—

Note 1: These parameters are characterized, but not tested in manufacturing.
2: Data in “Typ” column is at 3.3V, 25°C unless otherwise stated. Characterized by design but not tested.

© 2011-2016 Microchip Technology Inc.

FIGURE 30-6: TIMER1, 2, 3, 4, 5 EXTERNAL CLOCK TIMING CHARACTERISTICS

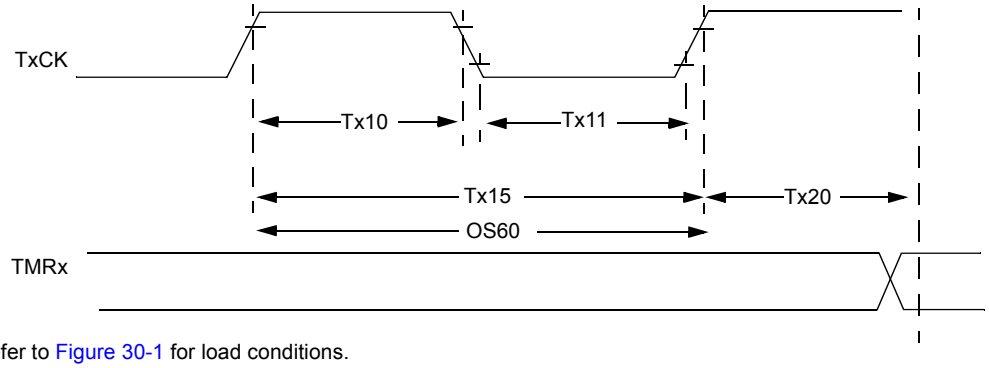

Note: Refer to Figure 30-1 for load conditions.

TABLE 30-23: TIMER1 EXTERNAL CLOCK TIMING REQUIREMENTS

AC CHARACTERISTICS(1)				Standard Operating Conditions: 2.3V to 3.6V (unless otherwise stated) Operating temperature -40°C ≤ TA ≤ +85°C for Industrial -40°C ≤ TA ≤ +105°C for V-temp				
Param. No.	**Symbol**	**Characteristics(2)**		**Min.**	**Typical**	**Max.**	**Units**	**Conditions**
TA10	TTxH	TxCK High Time	Synchronous, with prescaler	[(12.5 ns or 1 TPB)/N] + 25 ns	—	—	ns	Must also meet parameter TA15
			Asynchronous, with prescaler	10	—	—	ns	—
TA11	TTxL	TxCK Low Time	Synchronous, with prescaler	[(12.5 ns or 1 TPB)/N] + 25 ns	—	—	ns	Must also meet parameter TA15
			Asynchronous, with prescaler	10	—	—	ns	—
TA15	TTxP	TxCK Input Period	Synchronous, with prescaler	[(Greater of 25 ns or 2 TPB)/N] + 30 ns	—	—	ns	VDD > 2.7V
				[(Greater of 25 ns or 2 TPB)/N] + 50 ns	—	—	ns	VDD < 2.7V
			Asynchronous, with prescaler	20	—	—	ns	VDD > 2.7V **(Note 3)**
				50	—	—	ns	VDD < 2.7V **(Note 3)**
OS60	FT1	SOSC1/T1CK Oscillator Input Frequency Range (oscillator enabled by setting the TCS (T1CON<1>) bit)		32	—	100	kHz	—
TA20	TCKEXTMRL	Delay from External TxCK Clock Edge to Timer Increment		—	—	1	TPB	—

Note 1: Timer1 is a Type A timer.

2: This parameter is characterized, but not tested in manufacturing.

3: N = Prescale Value (1, 8, 64, 256).

TABLE 30-24: TIMER2, 3, 4, 5 EXTERNAL CLOCK TIMING REQUIREMENTS

AC CHARACTERISTICS				Standard Operating Conditions: 2.3V to 3.6V (unless otherwise stated) Operating temperature -40°C ≤ TA ≤ +85°C for Industrial -40°C ≤ TA ≤ +105°C for V-temp				
Param. No.	**Symbol**	**Characteristics(1)**		**Min.**	**Max.**	**Units**	**Conditions**	
TB10	TTXH	TxCK High Time	Synchronous, with prescaler	[(12.5 ns or 1 TPB)/N] + 25 ns	—	ns	Must also meet parameter TB15	N = prescale value (1, 2, 4, 8, 16, 32, 64, 256)
TB11	TTXL	TxCK Low Time	Synchronous, with prescaler	[(12.5 ns or 1 TPB)/N] + 25 ns	—	ns	Must also meet parameter TB15	
TB15	TTXP	TxCK Input Period	Synchronous, with prescaler	[(Greater of [(25 ns or 2 TPB)/N] + 30 ns	—	ns	VDD > 2.7V	
				[(Greater of [(25 ns or 2 TPB)/N] + 50 ns	—	ns	VDD < 2.7V	
TB20	TCKEXTMRL	Delay from External TxCK Clock Edge to Timer Increment		—	1	TPB	—	

Note 1: These parameters are characterized, but not tested in manufacturing.

FIGURE 30-7: INPUT CAPTURE (CAPx) TIMING CHARACTERISTICS

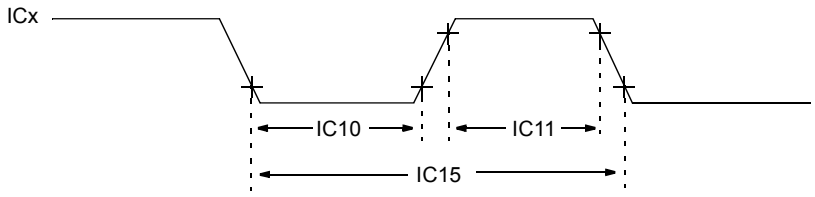

Note: Refer to Figure 30-1 for load conditions.

TABLE 30-25: INPUT CAPTURE MODULE TIMING REQUIREMENTS

AC CHARACTERISTICS			Standard Operating Conditions: 2.3V to 3.6V (unless otherwise stated) Operating temperature -40°C ≤ TA ≤ +85°C for Industrial -40°C ≤ TA ≤ +105°C for V-temp				
Param. No.	**Symbol**	**Characteristics(1)**	**Min.**	**Max.**	**Units**	**Conditions**	
IC10	TCCL	ICx Input Low Time	[(12.5 ns or 1 TPB)/N] + 25 ns	—	ns	Must also meet parameter IC15.	N = prescale value (1, 4, 16)
IC11	TCCH	ICx Input High Time	[(12.5 ns or 1 TPB)/N] + 25 ns	—	ns	Must also meet parameter IC15.	
IC15	TCCP	ICx Input Period	[(25 ns or 2 TPB)/N] + 50 ns	—	ns	—	

Note 1: These parameters are characterized, but not tested in manufacturing.

© 2011-2016 Microchip Technology Inc.

FIGURE 30-8: OUTPUT COMPARE MODULE (OCx) TIMING CHARACTERISTICS

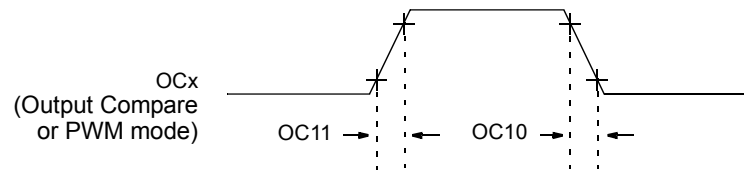

Note: Refer to Figure 30-1 for load conditions.

TABLE 30-26: OUTPUT COMPARE MODULE TIMING REQUIREMENTS

AC CHARACTERISTICS			Standard Operating Conditions: 2.3V to 3.6V (unless otherwise stated) Operating temperature -40°C ≤ TA ≤ +85°C for Industrial -40°C ≤ TA ≤ +105°C for V-temp				
Param. No.	**Symbol**	**Characteristics(1)**	**Min.**	**Typical(2)**	**Max.**	**Units**	**Conditions**
OC10	TCCF	OCx Output Fall Time	—	—	—	ns	See parameter DO32
OC11	TCCR	OCx Output Rise Time	—	—	—	ns	See parameter DO31

Note 1: These parameters are characterized, but not tested in manufacturing.

2: Data in "Typical" column is at 3.3V, 25°C unless otherwise stated. Parameters are for design guidance only and are not tested.

FIGURE 30-9: OCx/PWM MODULE TIMING CHARACTERISTICS

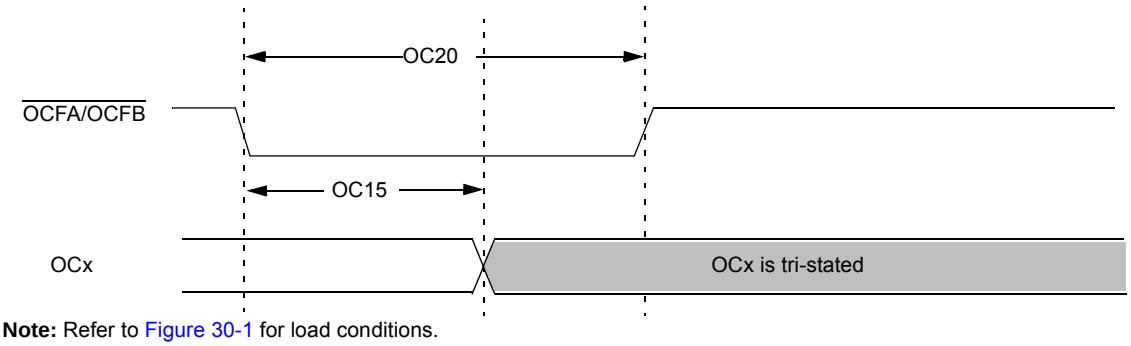

Note: Refer to Figure 30-1 for load conditions.

TABLE 30-27: SIMPLE OCx/PWM MODE TIMING REQUIREMENTS

AC CHARACTERISTICS			Standard Operating Conditions: 2.3V to 3.6V (unless otherwise stated) Operating temperature -40°C ≤ TA ≤ +85°C for Industrial -40°C ≤ TA ≤ +105°C for V-temp				
Param No.	**Symbol**	**Characteristics(1)**	**Min**	**Typical(2)**	**Max**	**Units**	**Conditions**
OC15	TFD	Fault Input to PWM I/O Change	—	—	50	ns	—
OC20	TFLT	Fault Input Pulse Width	50	—	—	ns	—

Note 1: These parameters are characterized, but not tested in manufacturing.

2: Data in "Typical" column is at 3.3V, 25°C unless otherwise stated. Parameters are for design guidance only and are not tested.

FIGURE 30-10: SPIx MODULE MASTER MODE (CKE = 0) TIMING CHARACTERISTICS

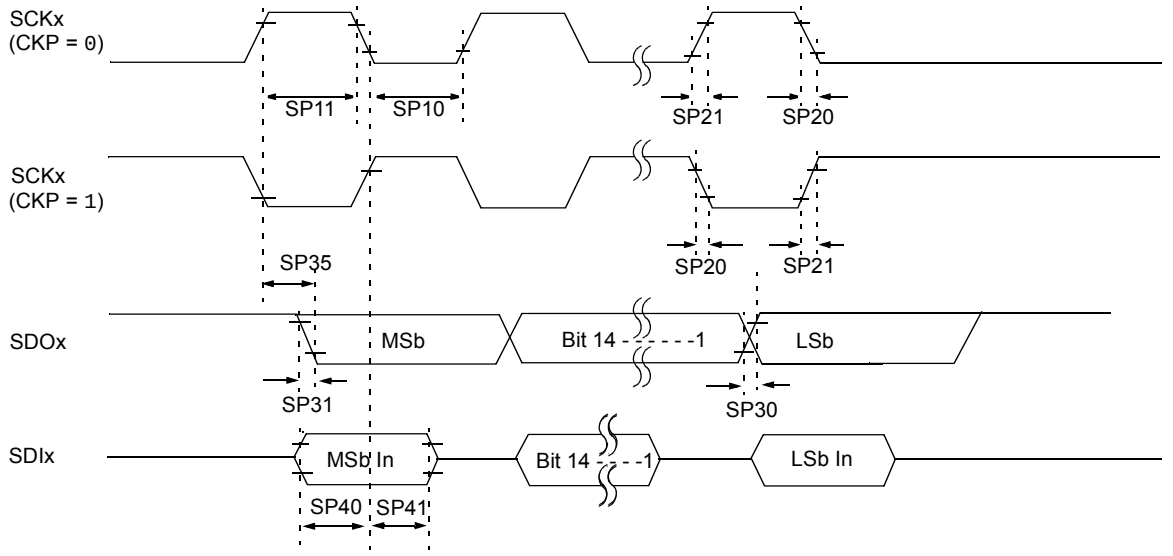

Note: Refer to Figure 30-1 for load conditions.

TABLE 30-28: SPIx MASTER MODE (CKE = 0) TIMING REQUIREMENTS

AC CHARACTERISTICS			Standard Operating Conditions: 2.3V to 3.6V (unless otherwise stated) Operating temperature -40°C ≤ TA ≤ +85°C for Industrial -40°C ≤ TA ≤ +105°C for V-temp				
Param. No.	**Symbol**	**Characteristics(1)**	**Min.**	**Typical(2)**	**Max.**	**Units**	**Conditions**
SP10	TscL	SCKx Output Low Time **(Note 3)**	Tsck/2	—	—	ns	—
SP11	TscH	SCKx Output High Time **(Note 3)**	Tsck/2	—	—	ns	—
SP20	TscF	SCKx Output Fall Time **(Note 4)**	—	—	—	ns	See parameter DO32
SP21	TscR	SCKx Output Rise Time **(Note 4)**	—	—	—	ns	See parameter DO31
SP30	TdoF	SDOx Data Output Fall Time **(Note 4)**	—	—	—	ns	See parameter DO32
SP31	TdoR	SDOx Data Output Rise Time **(Note 4)**	—	—	—	ns	See parameter DO31
SP35	TscH2doV, TscL2doV	SDOx Data Output Valid after SCKx Edge	—	—	15	ns	VDD > 2.7V
			—	—	20	ns	VDD < 2.7V
SP40	TdiV2scH, TdiV2scL	Setup Time of SDIx Data Input to SCKx Edge	10	—	—	ns	—
SP41	TscH2diL, TscL2diL	Hold Time of SDIx Data Input to SCKx Edge	10	—	—	ns	—

Note 1: These parameters are characterized, but not tested in manufacturing.

2: Data in "Typical" column is at 3.3V, 25°C unless otherwise stated. Parameters are for design guidance only and are not tested.

3: The minimum clock period for SCKx is 50 ns. Therefore, the clock generated in Master mode must not violate this specification.

4: Assumes 50 pF load on all SPIx pins.

© 2011-2016 Microchip Technology Inc.

FIGURE 30-11: SPIx MODULE MASTER MODE (CKE = 1) TIMING CHARACTERISTICS

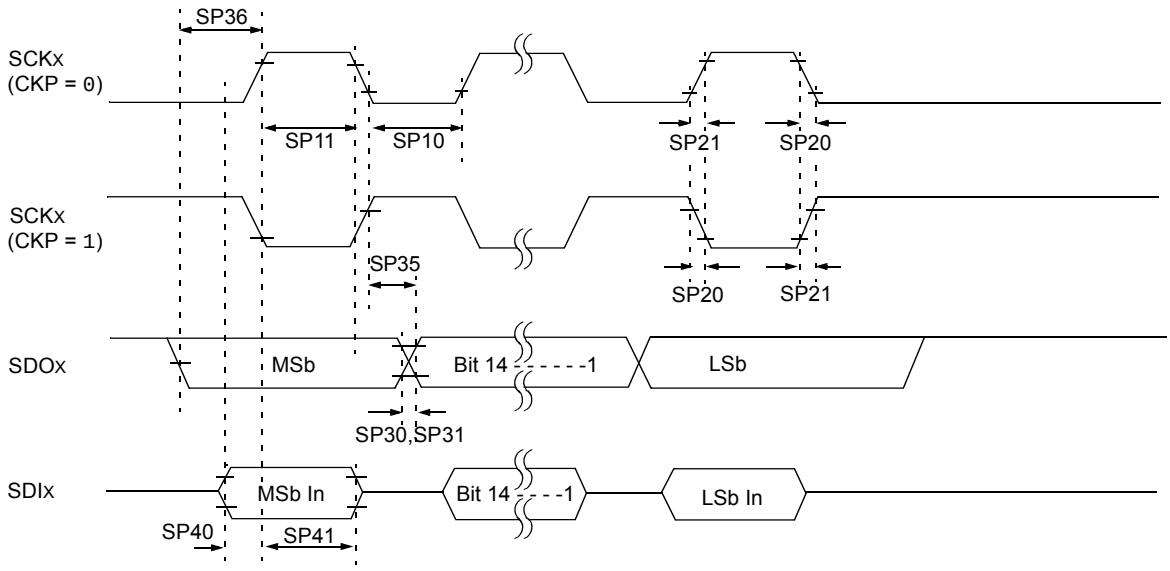

Note: Refer to Figure 30-1 for load conditions.

TABLE 30-29: SPIx MODULE MASTER MODE (CKE = 1) TIMING REQUIREMENTS

AC CHARACTERISTICS			Standard Operating Conditions: 2.3V to 3.6V (unless otherwise stated) Operating temperature -40°C ≤ TA ≤ +85°C for Industrial -40°C ≤ TA ≤ +105°C for V-temp				
Param. No.	**Symbol**	**Characteristics(1)**	**Min.**	**Typ.(2)**	**Max.**	**Units**	**Conditions**
SP10	TscL	SCKx Output Low Time **(Note 3)**	Tsck/2	—	—	ns	—
SP11	TscH	SCKx Output High Time **(Note 3)**	Tsck/2	—	—	ns	—
SP20	TscF	SCKx Output Fall Time **(Note 4)**	—	—	—	ns	See parameter DO32
SP21	TscR	SCKx Output Rise Time **(Note 4)**	—	—	—	ns	See parameter DO31
SP30	TdoF	SDOx Data Output Fall Time **(Note 4)**	—	—	—	ns	See parameter DO32
SP31	TdoR	SDOx Data Output Rise Time **(Note 4)**	—	—	—	ns	See parameter DO31
SP35	TscH2doV, TscL2doV	SDOx Data Output Valid after SCKx Edge	—	—	15	ns	VDD > 2.7V
			—	—	20	ns	VDD < 2.7V
SP36	TdoV2sc, TdoV2scL	SDOx Data Output Setup to First SCKx Edge	15	—	—	ns	—
SP40	TdiV2scH, TdiV2scL	Setup Time of SDIx Data Input to SCKx Edge	15	—	—	ns	VDD > 2.7V
			20	—	—	ns	VDD < 2.7V
SP41	TscH2diL, TscL2diL	Hold Time of SDIx Data Input to SCKx Edge	15	—	—	ns	VDD > 2.7V
			20	—	—	ns	VDD < 2.7V

Note 1: These parameters are characterized, but not tested in manufacturing.

2: Data in “Typical” column is at 3.3V, 25°C unless otherwise stated. Parameters are for design guidance only and are not tested.

3: The minimum clock period for SCKx is 50 ns. Therefore, the clock generated in Master mode must not violate this specification.

4: Assumes 50 pF load on all SPIx pins.

FIGURE 30-12: SPIx MODULE SLAVE MODE (CKE = 0) TIMING CHARACTERISTICS

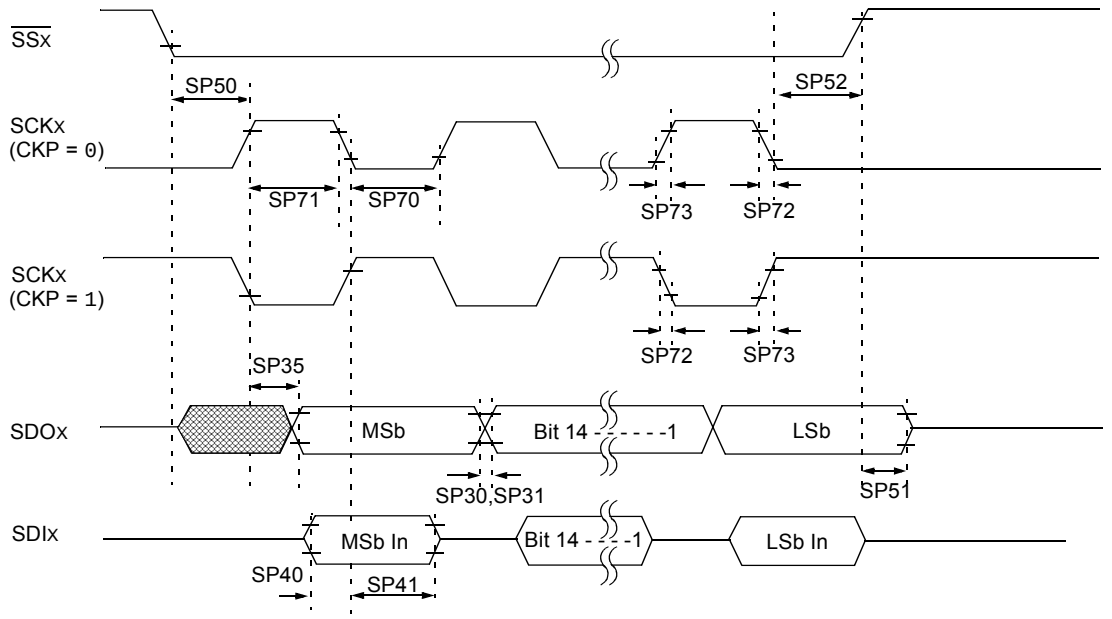

Note: Refer to Figure 30-1 for load conditions.

TABLE 30-30: SPIx MODULE SLAVE MODE (CKE = 0) TIMING REQUIREMENTS

AC CHARACTERISTICS			Standard Operating Conditions: 2.3V to 3.6V (unless otherwise stated) Operating temperature -40°C ≤ TA ≤ +85°C for Industrial -40°C ≤ TA ≤ +105°C for V-temp				
Param. No.	**Symbol**	**Characteristics(1)**	**Min.**	**Typ.(2)**	**Max.**	**Units**	**Conditions**
SP70	TscL	SCKx Input Low Time **(Note 3)**	Tsck/2	—	—	ns	—
SP71	TscH	SCKx Input High Time **(Note 3)**	Tsck/2	—	—	ns	—
SP72	TscF	SCKx Input Fall Time	—	—	—	ns	See parameter DO32
SP73	TscR	SCKx Input Rise Time	—	—	—	ns	See parameter DO31
SP30	TdoF	SDOx Data Output Fall Time **(Note 4)**	—	—	—	ns	See parameter DO32
SP31	TdoR	SDOx Data Output Rise Time **(Note 4)**	—	—	—	ns	See parameter DO31
SP35	TscH2doV, TscL2doV	SDOx Data Output Valid after SCKx Edge	—	—	15	ns	VDD > 2.7V
			—	—	20	ns	VDD < 2.7V
SP40	TdiV2scH, TdiV2scL	Setup Time of SDIx Data Input to SCKx Edge	10	—	—	ns	—
SP41	TscH2diL, TscL2diL	Hold Time of SDIx Data Input to SCKx Edge	10	—	—	ns	—
SP50	TssL2scH, TssL2scL	$\overline{SSx}$ ↓ to SCKx ↑ or SCKx Input	175	—	—	ns	—
SP51	TssH2doZ	$\overline{SSx}$ ↑ to SDOx Output High-Impedance **(Note 3)**	5	—	25	ns	—
SP52	TscH2ssH TscL2ssH	$\overline{SSx}$ after SCKx Edge	Tsck + 20	—	—	ns	—

Note 1: These parameters are characterized, but not tested in manufacturing.

2: Data in "Typical" column is at 3.3V, 25°C unless otherwise stated. Parameters are for design guidance only and are not tested.

3: The minimum clock period for SCKx is 50 ns.

4: Assumes 50 pF load on all SPIx pins.

© 2011-2016 Microchip Technology Inc.

FIGURE 30-13: SPIx MODULE SLAVE MODE (CKE = 1) TIMING CHARACTERISTICS

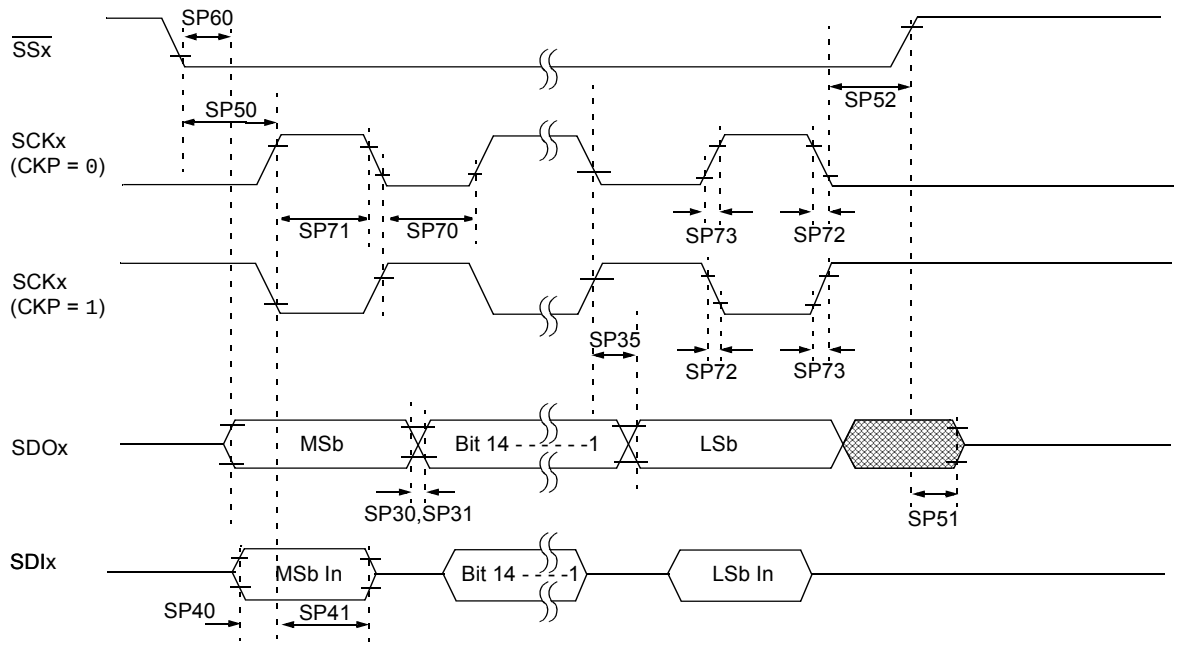

Note: Refer to Figure 30-1 for load conditions.

TABLE 30-31: SPIx MODULE SLAVE MODE (CKE = 1) TIMING REQUIREMENTS

AC CHARACTERISTICS			Standard Operating Conditions: 2.3V to 3.6V (unless otherwise stated) Operating temperature -40°C ≤ TA ≤ +85°C for Industrial -40°C ≤ TA ≤ +105°C for V-temp				
Param. No.	**Symbol**	**Characteristics(1)**	**Min.**	**Typical(2)**	**Max.**	**Units**	**Conditions**
SP70	TscL	SCKx Input Low Time **(Note 3)**	Tsck/2	—	—	ns	—
SP71	TscH	SCKx Input High Time **(Note 3)**	Tsck/2	—	—	ns	—
SP72	TscF	SCKx Input Fall Time	—	5	10	ns	—
SP73	TscR	SCKx Input Rise Time	—	5	10	ns	—
SP30	TdoF	SDOx Data Output Fall Time **(Note 4)**	—	—	—	ns	See parameter DO32
SP31	TdoR	SDOx Data Output Rise Time **(Note 4)**	—	—	—	ns	See parameter DO31
SP35	TscH2doV, TscL2doV	SDOx Data Output Valid after SCKx Edge	—	—	20	ns	VDD > 2.7V
			—	—	30	ns	VDD < 2.7V
SP40	TdiV2scH, TdiV2scL	Setup Time of SDIx Data Input to SCKx Edge	10	—	—	ns	—
SP41	TscH2diL, TscL2diL	Hold Time of SDIx Data Input to SCKx Edge	10	—	—	ns	—
SP50	TssL2scH, TssL2scL	$\overline{SSx}$ ↓ to SCKx ↓ or SCKx ↑ Input	175	—	—	ns	—

Note 1: These parameters are characterized, but not tested in manufacturing.

2: Data in "Typical" column is at 3.3V, 25°C unless otherwise stated. Parameters are for design guidance only and are not tested.

3: The minimum clock period for SCKx is 50 ns.

4: Assumes 50 pF load on all SPIx pins.

TABLE 30-31: SPIx MODULE SLAVE MODE (CKE = 1) TIMING REQUIREMENTS (CONTINUED)

AC CHARACTERISTICS			Standard Operating Conditions: 2.3V to 3.6V (unless otherwise stated) Operating temperature -40°C ≤ TA ≤ +85°C for Industrial -40°C ≤ TA ≤ +105°C for V-temp				
Param. No.	**Symbol**	**Characteristics(1)**	**Min.**	**Typical(2)**	**Max.**	**Units**	**Conditions**
SP51	TSSH2DOZ	$\overline{SSx}$ ↑ to SDOx Output High-Impedance **(Note 4)**	5	—	25	ns	—
SP52	TSCH2SSH TSCL2SSH	$\overline{SSx}$ ↑ after SCKx Edge	TSCK + 20	—	—	ns	—
SP60	TSSL2DOV	SDOx Data Output Valid after $\overline{SSx}$ Edge	—	—	25	ns	—

Note 1: These parameters are characterized, but not tested in manufacturing.

2: Data in “Typical” column is at 3.3V, 25°C unless otherwise stated. Parameters are for design guidance only and are not tested.

3: The minimum clock period for SCKx is 50 ns.

4: Assumes 50 pF load on all SPIx pins.

© 2011-2016 Microchip Technology Inc.

FIGURE 30-14: I2Cx BUS START/STOP BITS TIMING CHARACTERISTICS (MASTER MODE)

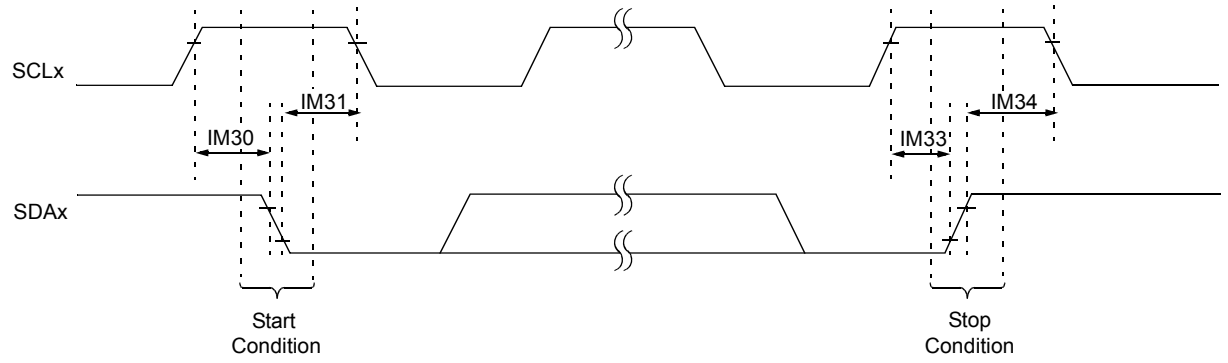

Note: Refer to Figure 30-1 for load conditions.

FIGURE 30-15: I2Cx BUS DATA TIMING CHARACTERISTICS (MASTER MODE)

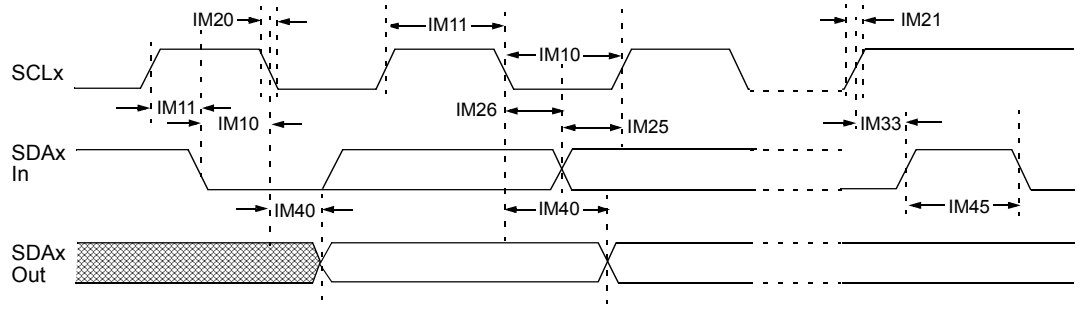

Note: Refer to Figure 30-1 for load conditions.

TABLE 30-32: I2Cx BUS DATA TIMING REQUIREMENTS (MASTER MODE)

AC CHARACTERISTICS				Standard Operating Conditions: 2.3V to 3.6V (unless otherwise stated) Operating temperature -40°C ≤ TA ≤ +85°C for Industrial -40°C ≤ TA ≤ +105°C for V-temp			
Param. No.	**Symbol**	**Characteristics**		**Min.(1)**	**Max.**	**Units**	**Conditions**
IM10	TLO:SCL	Clock Low Time	100 kHz mode	TPB * (BRG + 2)	—	μs	—
			400 kHz mode	TPB * (BRG + 2)	—	μs	—
			1 MHz mode **(Note 2)**	TPB * (BRG + 2)	—	μs	—
IM11	THI:SCL	Clock High Time	100 kHz mode	TPB * (BRG + 2)	—	μs	—
			400 kHz mode	TPB * (BRG + 2)	—	μs	—
			1 MHz mode **(Note 2)**	TPB * (BRG + 2)	—	μs	—
IM20	TF:SCL	SDAx and SCLx Fall Time	100 kHz mode	—	300	ns	CB is specified to be from 10 to 400 pF
			400 kHz mode	20 + 0.1 CB	300	ns	
			1 MHz mode **(Note 2)**	—	100	ns	
IM21	TR:SCL	SDAx and SCLx Rise Time	100 kHz mode	—	1000	ns	CB is specified to be from 10 to 400 pF
			400 kHz mode	20 + 0.1 CB	300	ns	
			1 MHz mode **(Note 2)**	—	300	ns	
IM25	TSU:DAT	Data Input Setup Time	100 kHz mode	250	—	ns	—
			400 kHz mode	100	—	ns	
			1 MHz mode **(Note 2)**	100	—	ns	
IM26	THD:DAT	Data Input Hold Time	100 kHz mode	0	—	μs	—
			400 kHz mode	0	0.9	μs	
			1 MHz mode **(Note 2)**	0	0.3	μs	
IM30	TSU:STA	Start Condition Setup Time	100 kHz mode	TPB * (BRG + 2)	—	μs	Only relevant for Repeated Start condition
			400 kHz mode	TPB * (BRG + 2)	—	μs	
			1 MHz mode **(Note 2)**	TPB * (BRG + 2)	—	μs	
IM31	THD:STA	Start Condition Hold Time	100 kHz mode	TPB * (BRG + 2)	—	μs	After this period, the first clock pulse is generated
			400 kHz mode	TPB * (BRG + 2)	—	μs	
			1 MHz mode **(Note 2)**	TPB * (BRG + 2)	—	μs	
IM33	TSU:STO	Stop Condition Setup Time	100 kHz mode	TPB * (BRG + 2)	—	μs	—
			400 kHz mode	TPB * (BRG + 2)	—	μs	
			1 MHz mode **(Note 2)**	TPB * (BRG + 2)	—	μs	
IM34	THD:STO	Stop Condition Hold Time	100 kHz mode	TPB * (BRG + 2)	—	ns	—
			400 kHz mode	TPB * (BRG + 2)	—	ns	
			1 MHz mode **(Note 2)**	TPB * (BRG + 2)	—	ns	

Note 1: BRG is the value of the I^2C Baud Rate Generator.

2: Maximum pin capacitance = 10 pF for all I2Cx pins (for 1 MHz mode only).

3: The typical value for this parameter is 104 ns.

© 2011-2016 Microchip Technology Inc.

TABLE 30-32: I2Cx BUS DATA TIMING REQUIREMENTS (MASTER MODE) (CONTINUED)

AC CHARACTERISTICS				Standard Operating Conditions: 2.3V to 3.6V (unless otherwise stated) Operating temperature -40°C ≤ TA ≤ +85°C for Industrial -40°C ≤ TA ≤ +105°C for V-temp			
Param. No.	**Symbol**	**Characteristics**		**Min.(1)**	**Max.**	**Units**	**Conditions**
IM40	TAA:SCL	Output Valid from Clock	100 kHz mode	—	3500	ns	—
			400 kHz mode	—	1000	ns	—
			1 MHz mode **(Note 2)**	—	350	ns	—
IM45	TBF:SDA	Bus Free Time	100 kHz mode	4.7	—	μs	The amount of time the bus must be free before a new transmission can start
			400 kHz mode	1.3	—	μs	
			1 MHz mode **(Note 2)**	0.5	—	μs	
IM50	CB	Bus Capacitive Loading		—	400	pF	—
IM51	TPGD	Pulse Gobbler Delay		52	312	ns	See **Note 3**

Note 1: BRG is the value of the I^2C Baud Rate Generator.

2: Maximum pin capacitance = 10 pF for all I2Cx pins (for 1 MHz mode only).

3: The typical value for this parameter is 104 ns.

FIGURE 30-16: I2Cx BUS START/STOP BITS TIMING CHARACTERISTICS (SLAVE MODE)

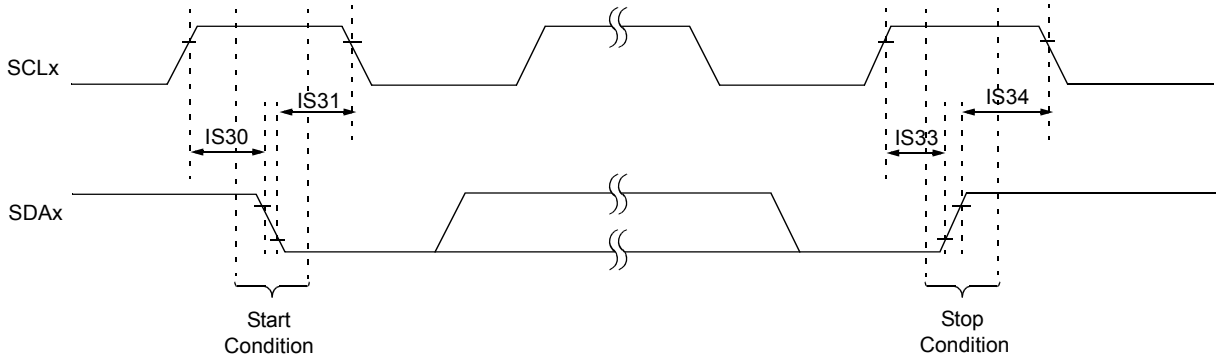

Note: Refer to Figure 30-1 for load conditions.

FIGURE 30-17: I2Cx BUS DATA TIMING CHARACTERISTICS (SLAVE MODE)

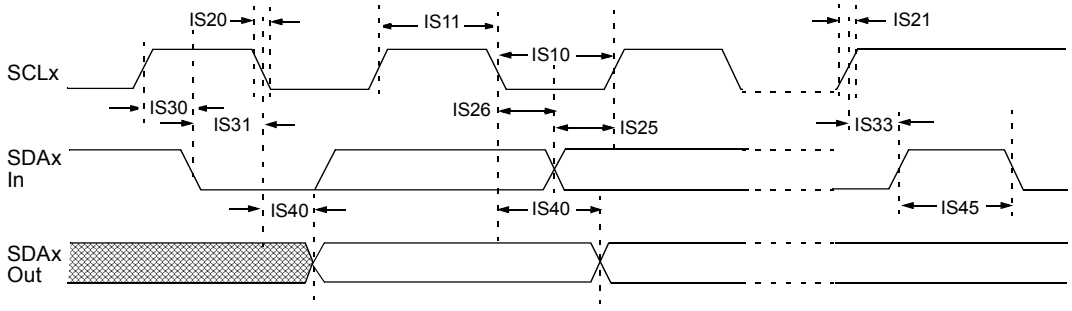

Note: Refer to Figure 30-1 for load conditions.

© 2011-2016 Microchip Technology Inc.

TABLE 30-33: I2Cx BUS DATA TIMING REQUIREMENTS (SLAVE MODE)

AC CHARACTERISTICS				Standard Operating Conditions: 2.3V to 3.6V (unless otherwise stated) Operating temperature -40°C ≤ TA ≤ +85°C for Industrial -40°C ≤ TA ≤ +105°C for V-temp			
Param. No.	**Symbol**	**Characteristics**		**Min.**	**Max.**	**Units**	**Conditions**
IS10	TLO:SCL	Clock Low Time	100 kHz mode	4.7	—	μs	PBCLK must operate at a minimum of 800 kHz
			400 kHz mode	1.3	—	μs	PBCLK must operate at a minimum of 3.2 MHz
			1 MHz mode **(Note 1)**	0.5	—	μs	—
IS11	THI:SCL	Clock High Time	100 kHz mode	4.0	—	μs	PBCLK must operate at a minimum of 800 kHz
			400 kHz mode	0.6	—	μs	PBCLK must operate at a minimum of 3.2 MHz
			1 MHz mode **(Note 1)**	0.5	—	μs	—
IS20	TF:SCL	SDAx and SCLx Fall Time	100 kHz mode	—	300	ns	CB is specified to be from 10 to 400 pF
			400 kHz mode	20 + 0.1 CB	300	ns	
			1 MHz mode **(Note 1)**	—	100	ns	
IS21	TR:SCL	SDAx and SCLx Rise Time	100 kHz mode	—	1000	ns	CB is specified to be from 10 to 400 pF
			400 kHz mode	20 + 0.1 CB	300	ns	
			1 MHz mode **(Note 1)**	—	300	ns	
IS25	TSU:DAT	Data Input Setup Time	100 kHz mode	250	—	ns	—
			400 kHz mode	100	—	ns	
			1 MHz mode **(Note 1)**	100	—	ns	
IS26	THD:DAT	Data Input Hold Time	100 kHz mode	0	—	ns	—
			400 kHz mode	0	0.9	μs	
			1 MHz mode **(Note 1)**	0	0.3	μs	
IS30	TSU:STA	Start Condition Setup Time	100 kHz mode	4700	—	ns	Only relevant for Repeated Start condition
			400 kHz mode	600	—	ns	
			1 MHz mode **(Note 1)**	250	—	ns	
IS31	THD:STA	Start Condition Hold Time	100 kHz mode	4000	—	ns	After this period, the first clock pulse is generated
			400 kHz mode	600	—	ns	
			1 MHz mode **(Note 1)**	250	—	ns	
IS33	TSU:STO	Stop Condition Setup Time	100 kHz mode	4000	—	ns	—
			400 kHz mode	600	—	ns	
			1 MHz mode **(Note 1)**	600	—	ns	

Note 1: Maximum pin capacitance = 10 pF for all I2Cx pins (for 1 MHz mode only).

TABLE 30-33: I2Cx BUS DATA TIMING REQUIREMENTS (SLAVE MODE) (CONTINUED)

AC CHARACTERISTICS				Standard Operating Conditions: 2.3V to 3.6V (unless otherwise stated) Operating temperature -40°C ≤ TA ≤ +85°C for Industrial -40°C ≤ TA ≤ +105°C for V-temp			
Param. No.	**Symbol**	**Characteristics**		**Min.**	**Max.**	**Units**	**Conditions**
IS34	THD:STO	Stop Condition Hold Time	100 kHz mode	4000	—	ns	—
			400 kHz mode	600	—	ns	
			1 MHz mode **(Note 1)**	250		ns	
IS40	TAA:SCL	Output Valid from Clock	100 kHz mode	0	3500	ns	—
			400 kHz mode	0	1000	ns	
			1 MHz mode **(Note 1)**	0	350	ns	
IS45	TBF:SDA	Bus Free Time	100 kHz mode	4.7	—	μs	The amount of time the bus must be free before a new transmission can start
			400 kHz mode	1.3	—	μs	
			1 MHz mode **(Note 1)**	0.5	—	μs	
IS50	CB	Bus Capacitive Loading		—	400	pF	—

Note 1: Maximum pin capacitance = 10 pF for all I2Cx pins (for 1 MHz mode only).

© 2011-2016 Microchip Technology Inc.

TABLE 30-34: ADC MODULE SPECIFICATIONS

AC CHARACTERISTICS			Standard Operating Conditions (see Note 5): 2.5V to 3.6V (unless otherwise stated) Operating temperature -40°C ≤ TA ≤ +85°C for Industrial -40°C ≤ TA ≤ +105°C for V-temp				
Param. No.	**Symbol**	**Characteristics**	**Min.**	**Typical**	**Max.**	**Units**	**Conditions**
Device Supply							
AD01	AVDD	Module VDD Supply	Greater of VDD – 0.3 or 2.5	—	Lesser of VDD + 0.3 or 3.6	V	—
AD02	AVSS	Module VSS Supply	VSS	—	AVDD	V	**(Note 1)**
Reference Inputs							
AD05 AD05a	VREFH	Reference Voltage High	AVSS + 2.0 2.5	— —	AVDD 3.6	V V	**(Note 1)** VREFH = AVDD **(Note 3)**
AD06	VREFL	Reference Voltage Low	AVSS	—	VREFH – 2.0	V	**(Note 1)**
AD07	VREF	Absolute Reference Voltage (VREFH – VREFL)	2.0	—	AVDD	V	**(Note 3)**
AD08 AD08a	IREF	Current Drain	— —	250 —	400 3	µA µA	ADC operating ADC off
Analog Input							
AD12	VINH-VINL	Full-Scale Input Span	VREFL	—	VREFH	V	—
AD13	VINL	Absolute VINL Input Voltage	AVSS – 0.3	—	AVDD/2	V	—
AD14	VIN	Absolute Input Voltage	AVSS – 0.3	—	AVDD + 0.3	V	—
AD15	—	Leakage Current	—	±0.001	±0.610	µA	VINL = AVSS = VREFL = 0V, AVDD = VREFH = 3.3V Source Impedance = 10 kΩ
AD17	RIN	Recommended Impedance of Analog Voltage Source	—	—	5k	Ω	**(Note 1)**
ADC Accuracy – Measurements with External VREF+/VREF-							
AD20c	Nr	Resolution	10 data bits			bits	—
AD21c	INL	Integral Non-linearity	> -1	—	< 1	LSb	VINL = AVSS = VREFL = 0V, AVDD = VREFH = 3.3V
AD22c	DNL	Differential Non-linearity	> -1	—	< 1	LSb	VINL = AVSS = VREFL = 0V, AVDD = VREFH = 3.3V **(Note 2)**
AD23c	GERR	Gain Error	> -1	—	< 1	LSb	VINL = AVSS = VREFL = 0V, AVDD = VREFH = 3.3V
AD24c	EOFF	Offset Error	> -1	—	< 1	Lsb	VINL = AVSS = 0V, AVDD = 3.3V
AD25c	—	Monotonicity	—	—	—	—	Guaranteed

Note 1: These parameters are not characterized or tested in manufacturing.

2: With no missing codes.

3: These parameters are characterized, but not tested in manufacturing.

4: Characterized with a 1 kHz sine wave.

5: The ADC module is functional at VBORMIN < VDD < 2.5V, but with degraded performance. Unless otherwise stated, module functionality is tested, but not characterized.

TABLE 30-34: ADC MODULE SPECIFICATIONS

AC CHARACTERISTICS			Standard Operating Conditions (see Note 5): 2.5V to 3.6V (unless otherwise stated) Operating temperature -40°C ≤ TA ≤ +85°C for Industrial -40°C ≤ TA ≤ +105°C for V-temp				
Param. No.	**Symbol**	**Characteristics**	**Min.**	**Typical**	**Max.**	**Units**	**Conditions**
ADC Accuracy – Measurements with Internal VREF+/VREF-							
AD20d	Nr	Resolution	10 data bits			bits	**(Note 3)**
AD21d	INL	Integral Non-linearity	> -1	—	< 1	LSb	VINL = AVSS = 0V, AVDD = 2.5V to 3.6V **(Note 3)**
AD22d	DNL	Differential Non-linearity	> -1	—	< 1	LSb	VINL = AVSS = 0V, AVDD = 2.5V to 3.6V **(Notes 2,3)**
AD23d	GERR	Gain Error	> -4	—	< 4	LSb	VINL = AVSS = 0V, AVDD = 2.5V to 3.6V **(Note 3)**
AD24d	EOFF	Offset Error	> -2	—	< 2	Lsb	VINL = AVSS = 0V, AVDD = 2.5V to 3.6V **(Note 3)**
AD25d	—	Monotonicity	—	—	—	—	Guaranteed
Dynamic Performance							
AD32b	SINAD	Signal to Noise and Distortion	55	58.5	—	dB	**(Notes 3,4)**
AD34b	ENOB	Effective Number of bits	9.0	9.5	—	bits	**(Notes 3,4)**

Note 1: These parameters are not characterized or tested in manufacturing.

2: With no missing codes.

3: These parameters are characterized, but not tested in manufacturing.

4: Characterized with a 1 kHz sine wave.

5: The ADC module is functional at VBORMIN < VDD < 2.5V, but with degraded performance. Unless otherwise stated, module functionality is tested, but not characterized.

© 2011-2016 Microchip Technology Inc.

TABLE 30-35: 10-BIT CONVERSION RATE PARAMETERS

AC CHARACTERISTICS(2)			Standard Operating Conditions (see Note 3): 2.5V to 3.6V (unless otherwise stated) Operating temperature -40°C ≤ TA ≤ +85°C for Industrial -40°C ≤ TA ≤ +105°C for V-temp		
ADC Speed	**TAD Min.**	**Sampling Time Min.**	**RS Max.**	**VDD**	**ADC Channels Configuration**
1 Msps to 400 ksps(1)	65 ns	132 ns	500Ω	3.0V to 3.6V	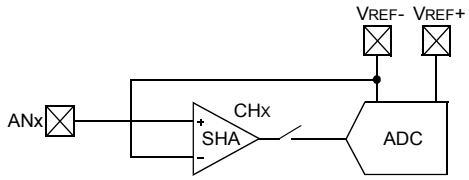
Up to 400 ksps	200 ns	200 ns	5.0 kΩ	2.5V to 3.6V	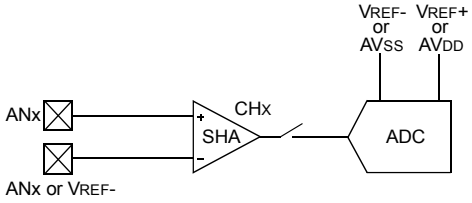

Note 1: External VREF- and VREF+ pins must be used for correct operation.

2: These parameters are characterized, but not tested in manufacturing.

3: The ADC module is functional at VBORMIN < VDD < 2.5V, but with degraded performance. Unless otherwise stated, module functionality is tested, but not characterized.

TABLE 30-36: ANALOG-TO-DIGITAL CONVERSION TIMING REQUIREMENTS

AC CHARACTERISTICS			Standard Operating Conditions (see Note 4): 2.5V to 3.6V (unless otherwise stated) Operating temperature -40°C ≤ TA ≤ +85°C for Industrial -40°C ≤ TA ≤ +105°C for V-temp				
Param. No.	**Symbol**	**Characteristics**	**Min.**	**Typical(1)**	**Max.**	**Units**	**Conditions**
Clock Parameters							
AD50	TAD	ADC Clock Period(2)	65	—	—	ns	See Table 30-35
Conversion Rate							
AD55	TCONV	Conversion Time	—	12 TAD	—	—	—
AD56	FCNV	Throughput Rate (Sampling Speed)	—	—	1000	ksps	AVDD = 3.0V to 3.6V
			—	—	400	ksps	AVDD = 2.5V to 3.6V
AD57	TSAMP	Sample Time	1 TAD	—	—	—	TSAMP must be ≥ 132 ns
Timing Parameters							
AD60	TPCS	Conversion Start from Sample Trigger(3)	—	1.0 TAD	—	—	Auto-Convert Trigger (SSRC<2:0> = 111) not selected
AD61	TPSS	Sample Start from Setting Sample (SAMP) bit	0.5 TAD	—	1.5 TAD	—	—
AD62	TCSS	Conversion Completion to Sample Start (ASAM = 1)(3)	—	0.5 TAD	—	—	—
AD63	TDPU	Time to Stabilize Analog Stage from ADC Off to ADC On(3)	—	—	2	µs	—

Note 1: These parameters are characterized, but not tested in manufacturing.

2: Because the sample caps will eventually lose charge, clock rates below 10 kHz can affect linearity performance, especially at elevated temperatures.

3: Characterized by design but not tested.

4: The ADC module is functional at VBORMIN < VDD < 2.5V, but with degraded performance. Unless otherwise stated, module functionality is tested, but not characterized.

© 2011-2016 Microchip Technology Inc.

FIGURE 30-18: ANALOG-TO-DIGITAL CONVERSION (10-BIT MODE) TIMING CHARACTERISTICS (ASAM = 0, SSRC<2:0> = 000)

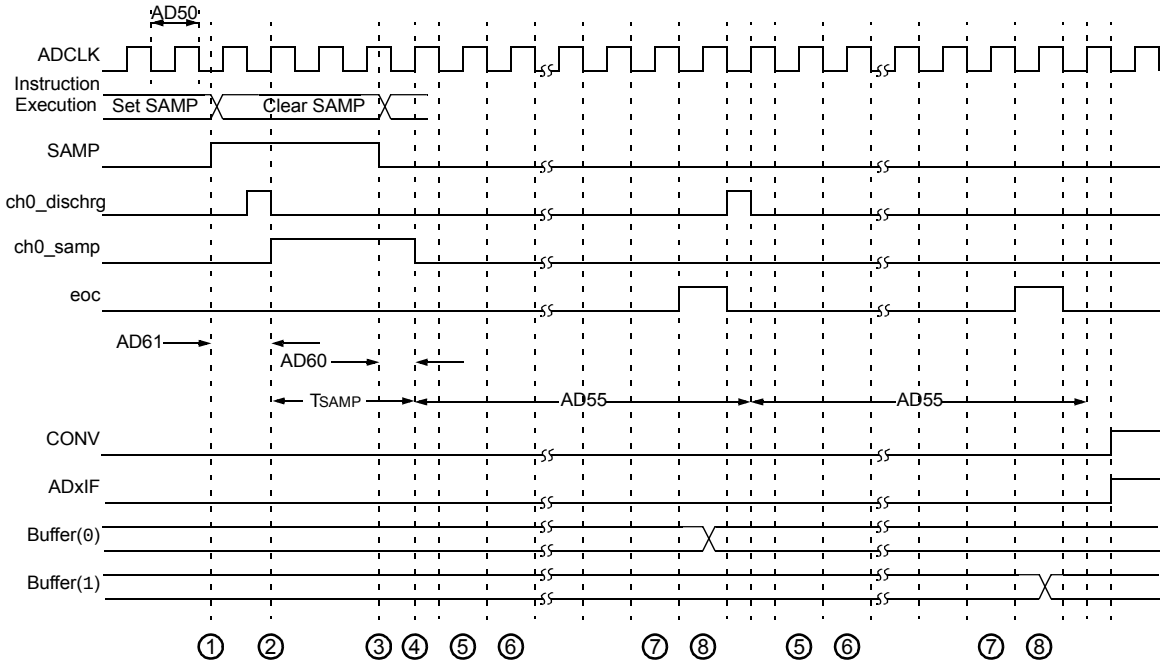

① – Software sets ADxCON. SAMP to start sampling.

② – Sampling starts after discharge period. TSAMP is described in **Section 17. "10-bit Analog-to-Digital Converter (ADC)"** (DS60001104) in the *"PIC32 Family Reference Manual"*.

③ – Software clears ADxCON. SAMP to start conversion.

④ – Sampling ends, conversion sequence starts.

⑤ – Convert bit 9.

⑥ – Convert bit 8.

⑦ – Convert bit 0.

⑧ – One TAD for end of conversion.

FIGURE 30-19: ANALOG-TO-DIGITAL CONVERSION (10-BIT MODE) TIMING CHARACTERISTICS (ASAM = 1, SSRC<2:0> = 111, SAMC<4:0> = 00001)

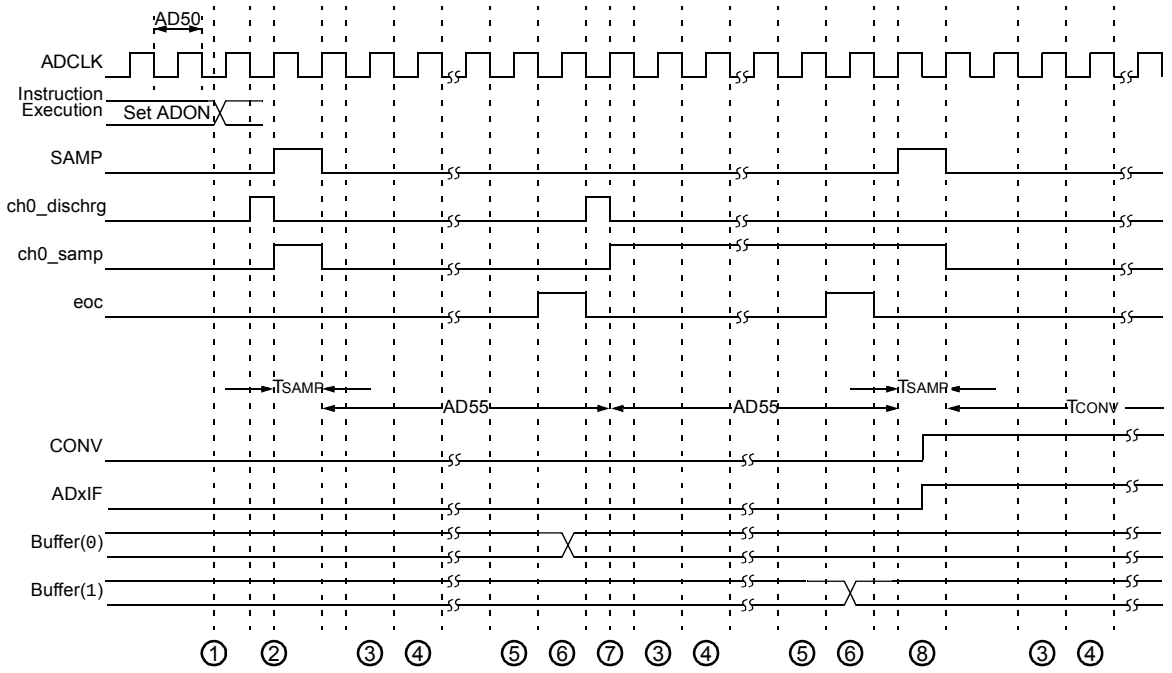

1 – Software sets ADxCON. ADON to start AD operation.

2 – Sampling starts after discharge period. TSAMP is described in **Section 17. "10-bit Analog-to-Digital Converter (ADC)"** (DS60001104).

3 – Convert bit 9.

4 – Convert bit 8.

5 – Convert bit 0.

6 – One TAD for end of conversion.

7 – Begin conversion of next channel.

8 – Sample for time specified by SAMC<4:0>.

© 2011-2016 Microchip Technology Inc.

FIGURE 30-20: PARALLEL SLAVE PORT TIMING

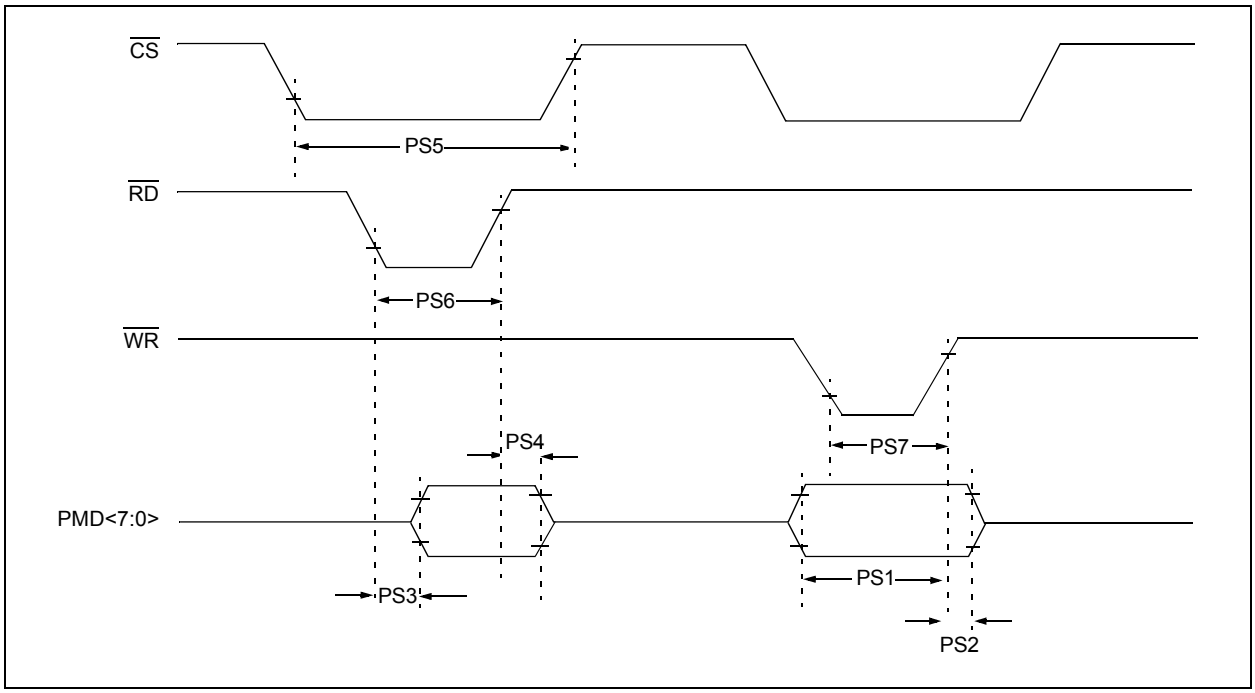

TABLE 30-37: PARALLEL SLAVE PORT REQUIREMENTS

AC CHARACTERISTICS			Standard Operating Conditions: 2.3V to 3.6V (unless otherwise stated) Operating temperature -40°C ≤ TA ≤ +85°C for Industrial -40°C ≤ TA ≤ +105°C for V-temp				
Param.No.	**Symbol**	**Characteristics(1)**	**Min.**	**Typ.**	**Max.**	**Units**	**Conditions**
PS1	TdtV2wrH	Data In Valid before $\overline{WR}$ or $\overline{CS}$ Inactive (setup time)	20	—	—	ns	—
PS2	TwrH2dtI	$\overline{WR}$ or $\overline{CS}$ Inactive to Data-In Invalid (hold time)	40	—	—	ns	—
PS3	TrdL2dtV	$\overline{RD}$ and $\overline{CS}$ Active to Data-Out Valid	—	—	60	ns	—
PS4	TrdH2dtI	$\overline{RD}$ Active or $\overline{CS}$ Inactive to Data-Out Invalid	0	—	10	ns	—
PS5	Tcs	$\overline{CS}$ Active Time	TPB + 40	—	—	ns	—
PS6	TWR	$\overline{WR}$ Active Time	TPB + 25	—	—	ns	—
PS7	TRD	$\overline{RD}$ Active Time	TPB + 25	—	—	ns	—

Note 1: These parameters are characterized, but not tested in manufacturing.

FIGURE 30-21: PARALLEL MASTER PORT READ TIMING DIAGRAM

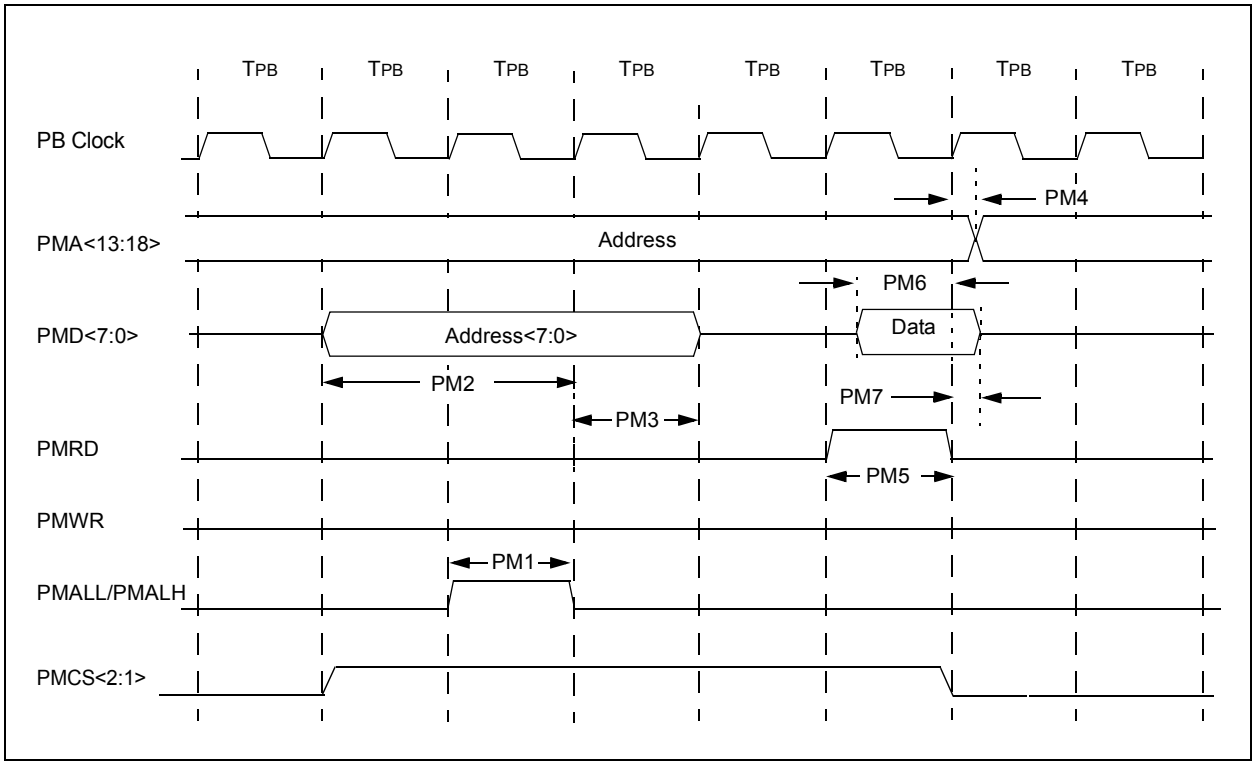

© 2011-2016 Microchip Technology Inc.

TABLE 30-38: PARALLEL MASTER PORT READ TIMING REQUIREMENTS

AC CHARACTERISTICS			Standard Operating Conditions: 2.3V to 3.6V (unless otherwise stated) Operating temperature -40°C ≤ TA ≤ +85°C for Industrial -40°C ≤ TA ≤ +105°C for V-temp				
Param. No.	**Symbol**	**Characteristics(1)**	**Min.**	**Typ.**	**Max.**	**Units**	**Conditions**
PM1	TLAT	PMALL/PMALH Pulse Width	—	1 TPB	—	—	—
PM2	TADSU	Address Out Valid to PMALL/PMALH Invalid (address setup time)	—	2 TPB	—	—	—
PM3	TADHOLD	PMALL/PMALH Invalid to Address Out Invalid (address hold time)	—	1 TPB	—	—	—
PM4	TAHOLD	PMRD Inactive to Address Out Invalid (address hold time)	5	—	—	ns	—
PM5	TRD	PMRD Pulse Width	—	1 TPB	—	—	—
PM6	TDSU	PMRD or PMENB Active to Data In Valid (data setup time)	15	—	—	ns	—
PM7	TDHOLD	PMRD or PMENB Inactive to Data In Invalid (data hold time)	—	80	—	ns	—

Note 1: These parameters are characterized, but not tested in manufacturing.

FIGURE 30-22: PARALLEL MASTER PORT WRITE TIMING DIAGRAM

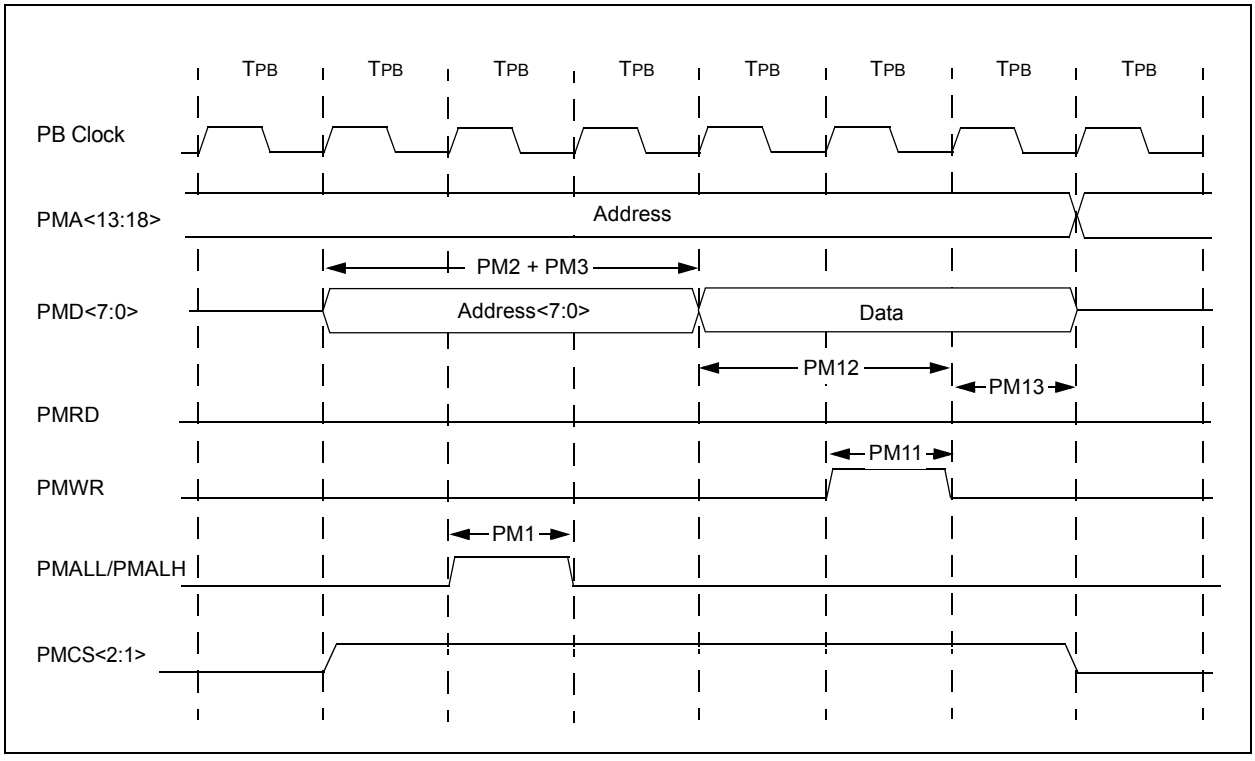

TABLE 30-39: PARALLEL MASTER PORT WRITE TIMING REQUIREMENTS

AC CHARACTERISTICS			Standard Operating Conditions: 2.3V to 3.6V (unless otherwise stated) Operating temperature -40°C ≤ TA ≤ +85°C for Industrial -40°C ≤ TA ≤ +105°C for V-temp				
Param. No.	**Symbol**	**Characteristics(1)**	**Min.**	**Typ.**	**Max.**	**Units**	**Conditions**
PM11	TWR	PMWR Pulse Width	—	1 TPB	—	—	—
PM12	TDVSU	Data Out Valid before PMWR or PMENB goes Inactive (data setup time)	—	2 TPB	—	—	—
PM13	TDVHOLD	PMWR or PMEMB Invalid to Data Out Invalid (data hold time)	—	1 TPB	—	—	—

Note 1: These parameters are characterized, but not tested in manufacturing.

TABLE 30-40: OTG ELECTRICAL SPECIFICATIONS

AC CHARACTERISTICS			Standard Operating Conditions: 2.3V to 3.6V (unless otherwise stated) Operating temperature -40°C ≤ TA ≤ +85°C for Industrial -40°C ≤ TA ≤ +105°C for V-temp				
Param. No.	**Symbol**	**Characteristics(1)**	**Min.**	**Typ.**	**Max.**	**Units**	**Conditions**
USB313	VUSB3V3	USB Voltage	3.0	—	3.6	V	Voltage on VUSB3V3 must be in this range for proper USB operation
USB315	VILUSB	Input Low Voltage for USB Buffer	—	—	0.8	V	—
USB316	VIHUSB	Input High Voltage for USB Buffer	2.0	—	—	V	—
USB318	VDIFS	Differential Input Sensitivity	—	—	0.2	V	The difference between D+ and D- must exceed this value while VCM is met
USB319	VCM	Differential Common Mode Range	0.8	—	2.5	V	—
USB320	ZOUT	Driver Output Impedance	28.0	—	44.0	Ω	—
USB321	VOL	Voltage Output Low	0.0	—	0.3	V	1.425 kΩ load connected to VUSB3V3
USB322	VOH	Voltage Output High	2.8	—	3.6	V	1.425 kΩ load connected to ground

Note 1: These parameters are characterized, but not tested in manufacturing.

© 2011-2016 Microchip Technology Inc.

TABLE 30-41: CTMU CURRENT SOURCE SPECIFICATIONS

DC CHARACTERISTICS			Standard Operating Conditions (see Note 3):2.3V to 3.6V (unless otherwise stated) Operating temperature -40°C ≤ TA ≤ +85°C for Industrial -40°C ≤ TA ≤ +105°C for V-temp				
Param No.	**Symbol**	**Characteristic**	**Min.**	**Typ.**	**Max.**	**Units**	**Conditions**
CTMU CURRENT SOURCE							
CTMUI1	IOUT1	Base Range(1)	—	0.55	—	μA	CTMUCON<9:8> = 01
CTMUI2	IOUT2	10x Range(1)	—	5.5	—	μA	CTMUCON<9:8> = 10
CTMUI3	IOUT3	100x Range(1)	—	55	—	μA	CTMUCON<9:8> = 11
CTMUI4	IOUT4	1000x Range(1)	—	550	—	μA	CTMUCON<9:8> = 00
CTMUFV1	VF	Temperature Diode Forward Voltage(1,2)	—	0.598	—	V	TA = +25ºC, CTMUCON<9:8> = 01
			—	0.658	—	V	TA = +25ºC, CTMUCON<9:8> = 10
			—	0.721	—	V	TA = +25ºC, CTMUCON<9:8> = 11
CTMUFV2	VFVR	Temperature Diode Rate of Change(1,2)	—	-1.92	—	mV/ºC	CTMUCON<9:8> = 01
			—	-1.74	—	mV/ºC	CTMUCON<9:8> = 10
			—	-1.56	—	mV/ºC	CTMUCON<9:8> = 11

Note 1: Nominal value at center point of current trim range (CTMUCON<15:10> = 000000).

2: Parameters are characterized but not tested in manufacturing. Measurements taken with the following conditions:

- VREF+ = AVDD = 3.3V
- ADC module configured for conversion speed of 500 ksps
- All PMD bits are cleared (PMDx = 0)
- Executing a `while(1)` statement
- Device operating from the FRC with no PLL

3: The CTMU module is functional at VBORMIN < VDD < VDDMIN, but with degraded performance. Unless otherwise stated, module functionality is tested, but not characterized.

FIGURE 30-23: EJTAG TIMING CHARACTERISTICS

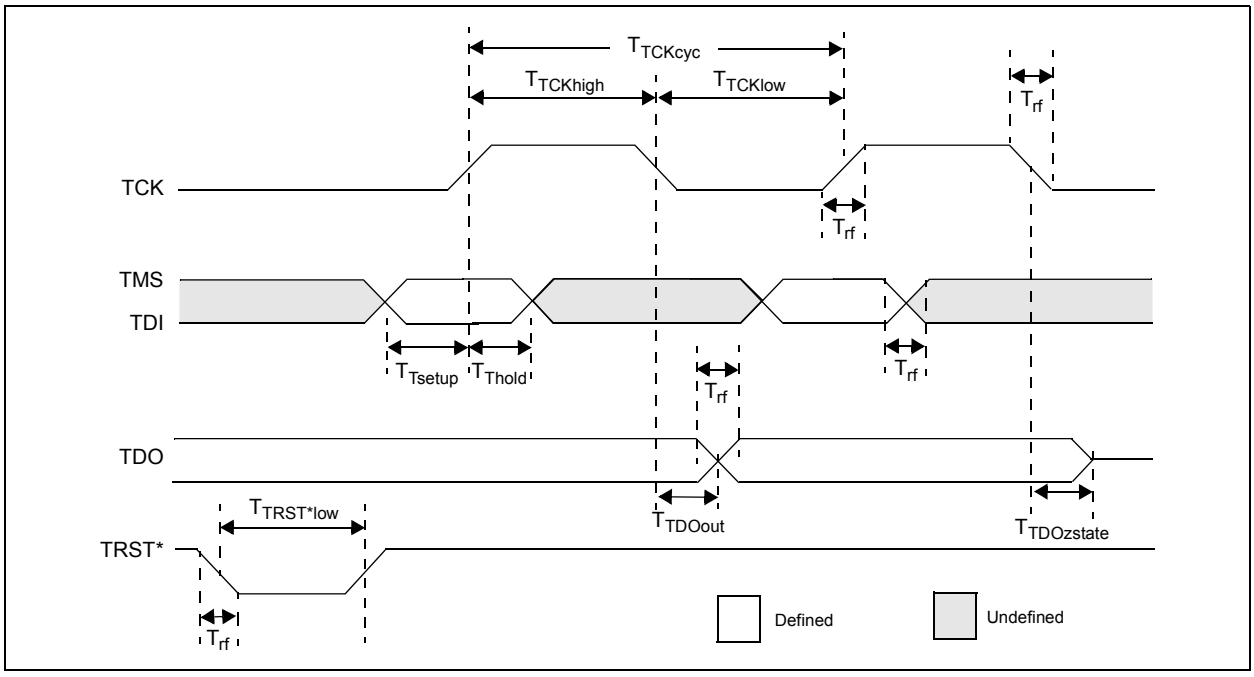

TABLE 30-42: EJTAG TIMING REQUIREMENTS

AC CHARACTERISTICS			Standard Operating Conditions: 2.3V to 3.6V (unless otherwise stated) Operating temperature -40°C ≤ TA ≤ +85°C for Industrial -40°C ≤ TA ≤ +105°C for V-temp			
Param. No.	**Symbol**	**Description(1)**	**Min.**	**Max.**	**Units**	**Conditions**
EJ1	TTCKCYC	TCK Cycle Time	25	—	ns	—
EJ2	TTCKHIGH	TCK High Time	10	—	ns	—
EJ3	TTCKLOW	TCK Low Time	10	—	ns	—
EJ4	TTSETUP	TAP Signals Setup Time Before Rising TCK	5	—	ns	—
EJ5	TTHOLD	TAP Signals Hold Time After Rising TCK	3	—	ns	—
EJ6	TTDOOUT	TDO Output Delay Time from Falling TCK	—	5	ns	—
EJ7	TTDOZSTATE	TDO 3-State Delay Time from Falling TCK	—	5	ns	—
EJ8	TTRSTLOW	TRST Low Time	25	—	ns	—
EJ9	TRF	TAP Signals Rise/Fall Time, All Input and Output	—	—	ns	—

Note 1: These parameters are characterized, but not tested in manufacturing.

© 2011-2016 Microchip Technology Inc.

31.0 50 MHz ELECTRICAL CHARACTERISTICS

This section provides an overview of the PIC32MX1XX/2XX 28/36/44-pin Family electrical characteristics for devices operating at 50 MHz.

The specifications for 50 MHz are identical to those shown in **Section 30.0 "Electrical Characteristics"**, with the exception of the parameters listed in this chapter.

Parameters in this chapter begin with the letter "M", which denotes 50 MHz operation. For example, parameter DC29a in **Section 30.0 "Electrical Characteristics"**, is the up to 40 MHz operation equivalent for MDC29a.

Absolute maximum ratings for the PIC32MX1XX/2XX 28/36/44-pin Family 50 MHz devices are listed below. Exposure to these maximum rating conditions for extended periods may affect device reliability. Functional operation of the device at these or any other conditions, above the parameters indicated in the operation listings of this specification, is not implied.

Absolute Maximum Ratings

(See Note 1)

Ambient temperature under bias ..... -40°C to +85°C
Storage temperature ..... -65°C to +150°C
Voltage on V_{DD} with respect to V_{SS} ..... -0.3V to +4.0V
Voltage on any pin that is not 5V tolerant, with respect to V_{SS} **(Note 3)** ..... -0.3V to (V_{DD} + 0.3V)
Voltage on any 5V tolerant pin with respect to V_{SS} when $V_{DD} \geq 2.3V$ **(Note 3)** ..... -0.3V to +5.5V
Voltage on any 5V tolerant pin with respect to V_{SS} when $V_{DD} < 2.3V$ **(Note 3)** ..... -0.3V to +3.6V
Voltage on D+ or D- pin with respect to V_{USB3V3} ..... -0.3V to (V_{USB3V3} + 0.3V)
Voltage on V_{BUS} with respect to V_{SS} ..... -0.3V to +5.5V
Maximum current out of V_{SS} pin(s) ..... 300 mA
Maximum current into V_{DD} pin(s) **(Note 2)** ..... 300 mA
Maximum output current sunk by any I/O pin ..... 15 mA
Maximum output current sourced by any I/O pin ..... 15 mA
Maximum current sunk by all ports ..... 200 mA
Maximum current sourced by all ports **(Note 2)** ..... 200 mA

Note 1: Stresses above those listed under **"Absolute Maximum Ratings"** may cause permanent damage to the device. This is a stress rating only and functional operation of the device at those or any other conditions, above those indicated in the operation listings of this specification, is not implied. Exposure to maximum rating conditions for extended periods may affect device reliability.

2: Maximum allowable current is a function of device maximum power dissipation (see Table 30-2).

3: See the **"Pin Diagrams"** section for the 5V tolerant pins.

31.1 DC Characteristics

TABLE 31-1: OPERATING MIPS VS. VOLTAGE

Characteristic	V_{DD} Range (in Volts)(1)	Temp. Range (in °C)	Max. Frequency
			PIC32MX1XX/2XX 28/36/44-pin Family
MDC5	2.3-3.6V	-40°C to +85°C	50 MHz

Note 1: Overall functional device operation at $V_{BORMIN} < V_{DD} < V_{DDMIN}$ is tested, but not characterized. All device Analog modules, such as ADC, etc., will function, but with degraded performance below V_{DDMIN}. Refer to parameter BO10 in Table 30-11 for BOR values.

TABLE 31-2: DC CHARACTERISTICS: OPERATING CURRENT (I_{DD})

DC CHARACTERISTICS			Standard Operating Conditions: 2.3V to 3.6V (unless otherwise stated) Operating temperature -40°C ≤ TA ≤ +85°C for Industrial	
Parameter No.	**Typical(3)**	**Max.**	**Units**	**Conditions**
Operating Current (I_{DD}) (Note 1, 2)				
MDC24	25	37	mA	50 MHz

Note 1: A device's I_{DD} supply current is mainly a function of the operating voltage and frequency. Other factors, such as PBCLK (Peripheral Bus Clock) frequency, number of peripheral modules enabled, internal code execution pattern, execution from Program Flash memory vs. SRAM, I/O pin loading and switching rate, oscillator type, as well as temperature, can have an impact on the current consumption.

2: The test conditions for I_{DD} measurements are as follows:

- Oscillator mode is EC (for 8 MHz and below) and EC+PLL (for above 8 MHz) with OSC1 driven by external square wave from rail-to-rail, (OSC1 input clock input over/undershoot < 100 mV required)
- OSC2/CLKO is configured as an I/O input pin
- USB PLL oscillator is disabled if the USB module is implemented, PBCLK divisor = 1:8
- CPU, Program Flash, and SRAM data memory are operational, SRAM data memory Wait states = `1`
- No peripheral modules are operating, (ON bit = `0`), but the associated PMD bit is cleared
- WDT, Clock Switching, Fail-Safe Clock Monitor, and Secondary Oscillator are disabled
- All I/O pins are configured as inputs and pulled to V_{SS}
- $\overline{MCLR}$ = V_{DD}
- CPU executing `while(1)` statement from Flash

3: RTCC and JTAG are disabled

4: Data in "Typical" column is at 3.3V, 25°C at specified operating frequency unless otherwise stated. Parameters are for design guidance only and are not tested.

© 2011-2016 Microchip Technology Inc.

TABLE 31-3: DC CHARACTERISTICS: IDLE CURRENT (I_{IDLE})

DC CHARACTERISTICS			Standard Operating Conditions: 2.3V to 3.6V (unless otherwise stated) Operating temperature -40°C ≤ TA ≤ +85°C for Industrial	
Parameter No.	**Typical(2)**	**Max.**	**Units**	**Conditions**
Idle Current (I_{IDLE}): Core Off, Clock on Base Current (Note 1)				
MDC34a	8	13	mA	50 MHz

Note 1: The test conditions for I_{IDLE} current measurements are as follows:
- Oscillator mode is EC (for 8 MHz and below) and EC+PLL (for above 8 MHz) with OSC1 driven by external square wave from rail-to-rail, (OSC1 input clock input over/undershoot < 100 mV required)
- OSC2/CLKO is configured as an I/O input pin
- USB PLL oscillator is disabled if the USB module is implemented, PBCLK divisor = 1:8
- CPU is in Idle mode (CPU core Halted), and SRAM data memory Wait states = 1
- No peripheral modules are operating, (ON bit = 0), but the associated PMD bit is cleared
- WDT, Clock Switching, Fail-Safe Clock Monitor, and Secondary Oscillator are disabled
- All I/O pins are configured as inputs and pulled to V_{SS}
- $\overline{MCLR}$ = V_{DD}
- RTCC and JTAG are disabled

2: Data in the "Typical" column is at 3.3V, 25°C unless otherwise stated. Parameters are for design guidance only and are not tested.

TABLE 31-4: DC CHARACTERISTICS: POWER-DOWN CURRENT (I_{PD})

DC CHARACTERISTICS			Standard Operating Conditions: 2.3V to 3.6V (unless otherwise stated) Operating temperature -40°C ≤ TA ≤ +85°C for Industrial		
Param. No.	**Typical(2)**	**Max.**	**Units**	**Conditions**	
Power-Down Current (I_{PD}) (Note 1)					
MDC40k	10	25	μA	-40°C	Base Power-Down Current
MDC40n	250	500	μA	+85°C	
Module Differential Current					
MDC41e	10	55	μA	3.6V	Watchdog Timer Current: ΔI_{WDT} **(Note 3)**
MDC42e	23	55	μA	3.6V	RTCC + Timer1 w/32 kHz Crystal: ΔI_{RTCC} **(Note 3)**
MDC43d	1100	1300	μA	3.6V	ADC: ΔI_{ADC} **(Notes 3,4)**

Note 1: The test conditions for I_{PD} current measurements are as follows:
- Oscillator mode is EC (for 8 MHz and below) and EC+PLL (for above 8 MHz) with OSC1 driven by external square wave from rail-to-rail, (OSC1 input clock input over/undershoot < 100 mV required)
- OSC2/CLKO is configured as an I/O input pin
- USB PLL oscillator is disabled if the USB module is implemented, PBCLK divisor = 1:8
- CPU is in Sleep mode, and SRAM data memory Wait states = 1
- No peripheral modules are operating, (ON bit = 0), but the associated PMD bit is set
- WDT, Clock Switching, Fail-Safe Clock Monitor, and Secondary Oscillator are disabled
- All I/O pins are configured as inputs and pulled to V_{SS}
- $\overline{MCLR}$ = V_{DD}
- RTCC and JTAG are disabled

2: Data in the "Typical" column is at 3.3V, 25°C unless otherwise stated. Parameters are for design guidance only and are not tested.

3: The Δ current is the additional current consumed when the module is enabled. This current should be added to the base I_{PD} current.

4: Test conditions for ADC module differential current are as follows: Internal ADC RC oscillator enabled.

TABLE 31-5: EXTERNAL CLOCK TIMING REQUIREMENTS

AC CHARACTERISTICS			Standard Operating Conditions: 2.3V to 3.6V (unless otherwise stated) Operating temperature -40°C ≤ TA ≤ +85°C for Industrial				
Param. No.	**Symbol**	**Characteristics**	**Min.**	**Typical**	**Max.**	**Units**	**Conditions**
MOS10	FOSC	External CLKI Frequency (External clocks allowed only in EC and ECPLL modes)	DC 4	— —	50 50	MHz MHz	EC **(Note 2)** ECPLL **(Note 1)**

Note 1: PLL input requirements: 4 MHz ≤ FPLLIN ≤ 5 MHz (use PLL prescaler to reduce Fosc). This parameter is characterized, but tested at 10 MHz only at manufacturing.

2: This parameter is characterized, but not tested in manufacturing.

TABLE 31-6: SPIx MASTER MODE (CKE = 0) TIMING REQUIREMENTS

AC CHARACTERISTICS			Standard Operating Conditions: 2.3V to 3.6V (unless otherwise stated) Operating temperature -40°C ≤ TA ≤ +85°C for Industrial				
Param. No.	**Symbol**	**Characteristics**	**Min.**	**Typical**	**Max.**	**Units**	**Conditions**
MSP10	TSCL	SCKx Output Low Time **(Note 1,2)**	TSCK/2	—	—	ns	—
MSP11	TSCH	SCKx Output High Time **(Note 1,2)**	TSCK/2	—	—	ns	—

Note 1: These parameters are characterized, but not tested in manufacturing.

2: The minimum clock period for SCKx is 40 ns. Therefore, the clock generated in Master mode must not violate this specification.

TABLE 31-7: SPIx MODULE MASTER MODE (CKE = 1) TIMING REQUIREMENTS

AC CHARACTERISTICS			Standard Operating Conditions: 2.3V to 3.6V (unless otherwise stated) Operating temperature -40°C ≤ TA ≤ +85°C for Industrial				
Param. No.	**Symbol**	**Characteristics(1)**	**Min.**	**Typ.**	**Max.**	**Units**	**Conditions**
MSP10	TSCL	SCKx Output Low Time **(Note 1,2)**	TSCK/2	—	—	ns	—
MSP11	TSCH	SCKx Output High Time **(Note 1,2)**	TSCK/2	—	—	ns	—

Note 1: These parameters are characterized, but not tested in manufacturing.

2: The minimum clock period for SCKx is 40 ns. Therefore, the clock generated in Master mode must not violate this specification.

© 2011-2016 Microchip Technology Inc.

TABLE 31-8: SPIx MODULE SLAVE MODE (CKE = 0) TIMING REQUIREMENTS

AC CHARACTERISTICS			Standard Operating Conditions: 2.3V to 3.6V (unless otherwise stated) Operating temperature -40°C ≤ TA ≤ +85°C for Industrial -40°C ≤ TA ≤ +105°C for V-temp				
Param. No.	**Symbol**	**Characteristics**	**Min.**	**Typ.**	**Max.**	**Units**	**Conditions**
MSP70	TscL	SCKx Input Low Time **(Note 1,2)**	Tsck/2	—	—	ns	—
MSP71	TscH	SCKx Input High Time **(Note 1,2)**	Tsck/2	—	—	ns	—
MSP51	TssH2doZ	$\overline{SSx}$ ↑ to SDOx Output High-Impedance **(Note 2)**	5	—	25	ns	—

Note 1: These parameters are characterized, but not tested in manufacturing.

2: The minimum clock period for SCKx is 40 ns.

TABLE 31-9: SPIx MODULE SLAVE MODE (CKE = 1) TIMING REQUIREMENTS

AC CHARACTERISTICS			Standard Operating Conditions: 2.3V to 3.6V (unless otherwise stated) Operating temperature -40°C ≤ TA ≤ +85°C for Industrial				
Param. No.	**Symbol**	**Characteristics**	**Min.**	**Typical**	**Max.**	**Units**	**Conditions**
SP70	TscL	SCKx Input Low Time **(Note 1,2)**	Tsck/2	—	—	ns	—
SP71	TscH	SCKx Input High Time **(Note 1,2)**	Tsck/2	—	—	ns	—

Note 1: These parameters are characterized, but not tested in manufacturing.

2: The minimum clock period for SCKx is 40 ns.

NOTES:

© 2011-2016 Microchip Technology Inc.

32.0 DC AND AC DEVICE CHARACTERISTICS GRAPHS

Note: The graphs provided following this note are a statistical summary based on a limited number of samples and are provided for design guidance purposes only. The performance characteristics listed herein are not tested or guaranteed. In some graphs, the data presented may be outside the specified operating range (e.g., outside specified power supply range) and therefore, outside the warranted range.

FIGURE 32-1: I/O OUTPUT VOLTAGE HIGH (VOH)

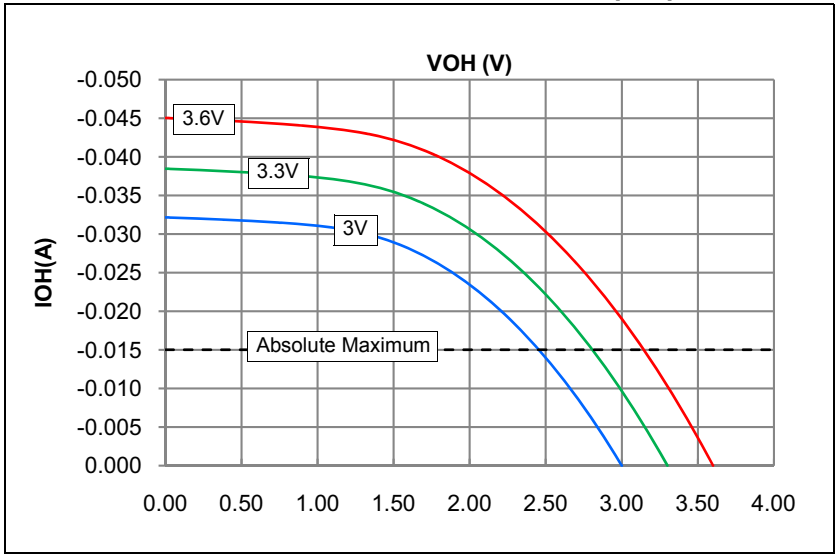

FIGURE 32-2: I/O OUTPUT VOLTAGE LOW (VOL)

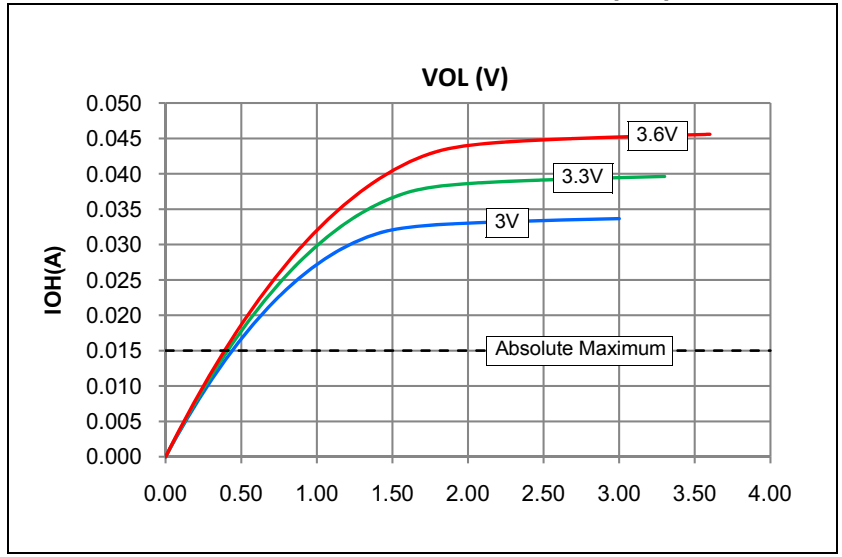

© 2011-2016 Microchip Technology Inc.

FIGURE 32-3: TYPICAL IPD CURRENT @ VDD = 3.3V

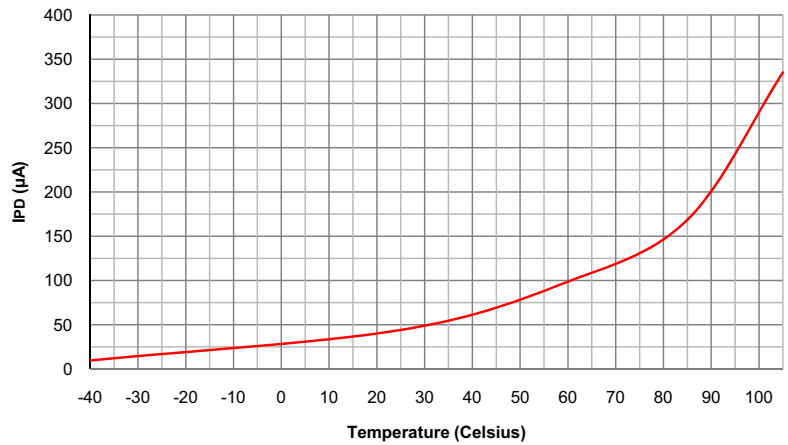

FIGURE 32-4: TYPICAL IDD CURRENT @ VDD = 3.3V

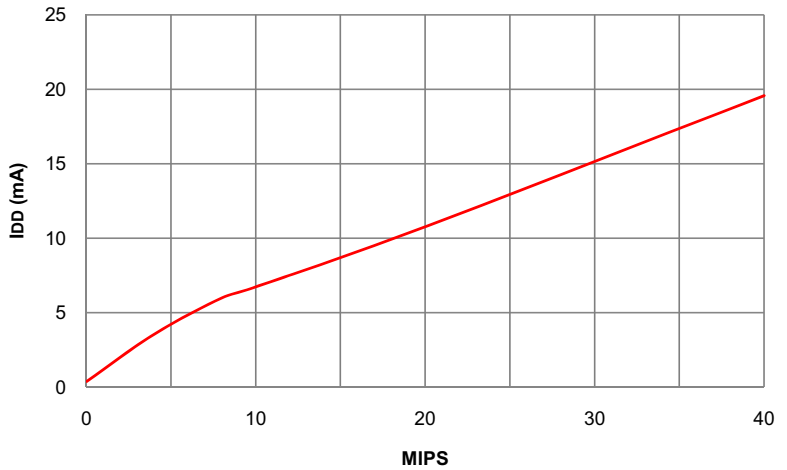

FIGURE 32-5: TYPICAL IIDLE CURRENT @ VDD = 3.3V

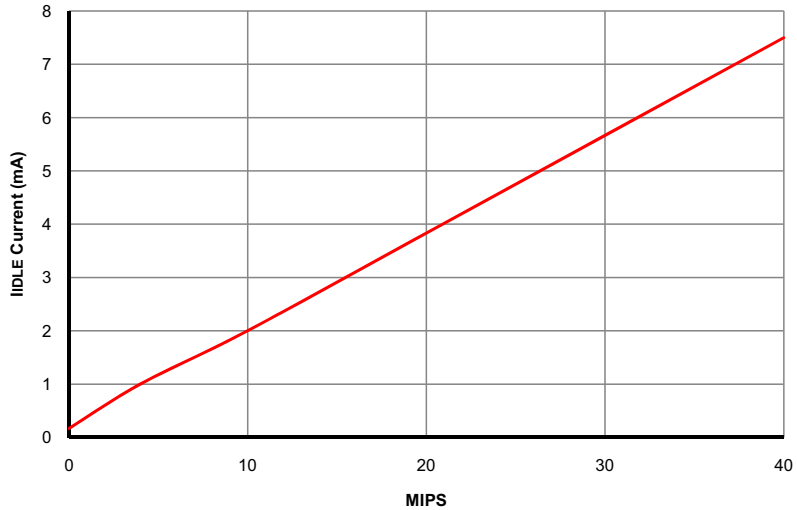

© 2011-2016 Microchip Technology Inc.

FIGURE 32-6: TYPICAL FRC FREQUENCY @ VDD = 3.3V

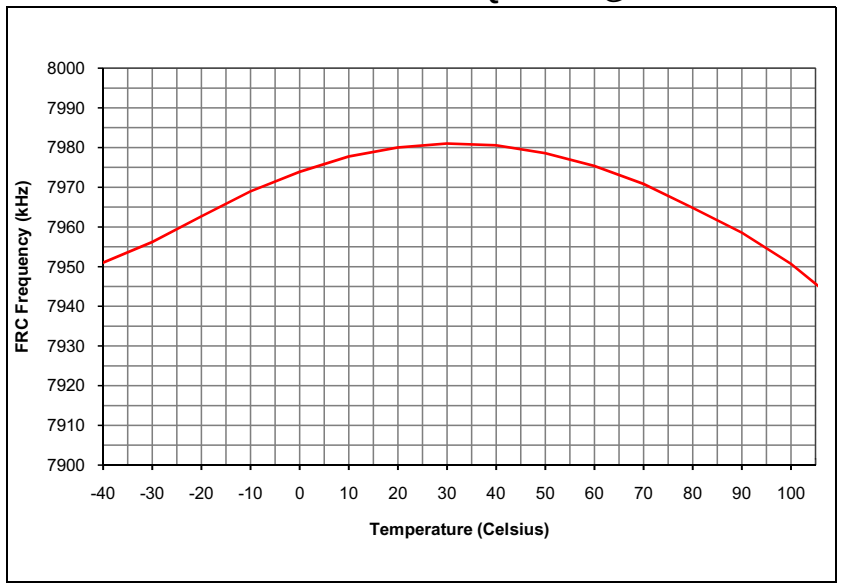

FIGURE 32-7: TYPICAL LPRC FREQUENCY @ VDD = 3.3V

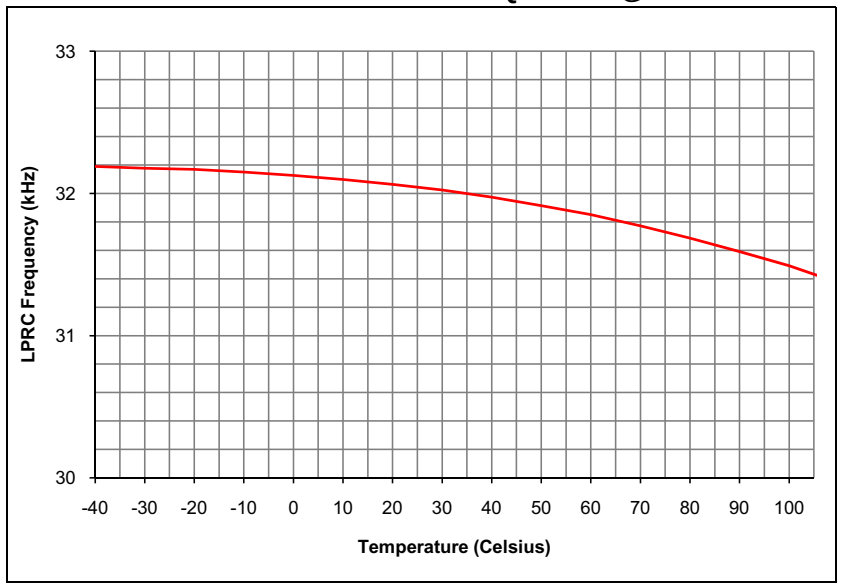

FIGURE 32-8: TYPICAL CTMU TEMPERATURE DIODE FORWARD VOLTAGE

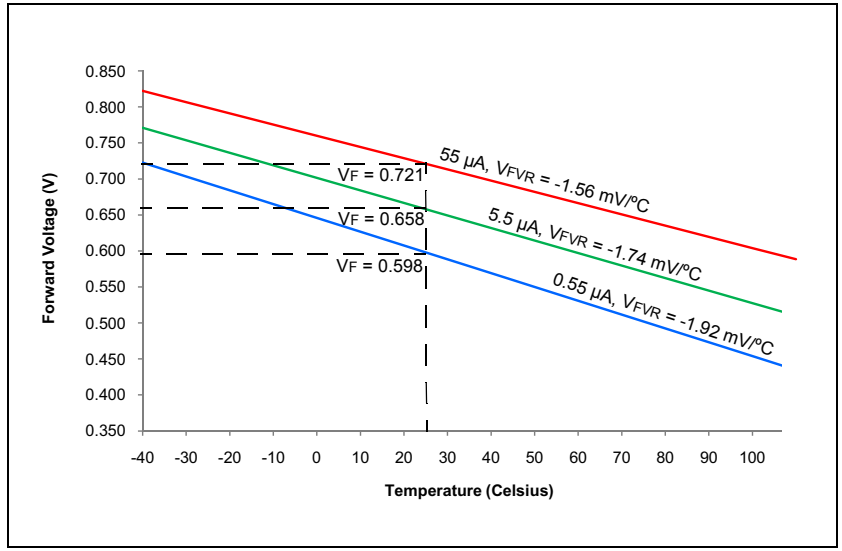

© 2011-2016 Microchip Technology Inc.

NOTES:

© 2011-2016 Microchip Technology Inc.

33.0 PACKAGING INFORMATION

33.1 Package Marking Information

28-Lead SOIC

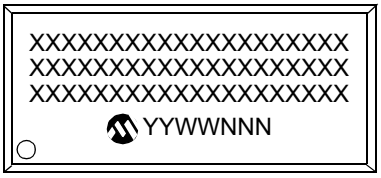

Example

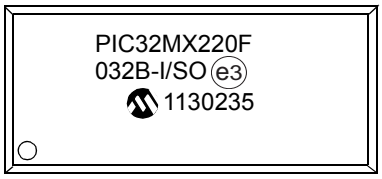

28-Lead SPDIP

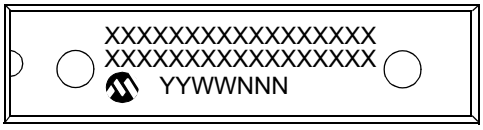

Example

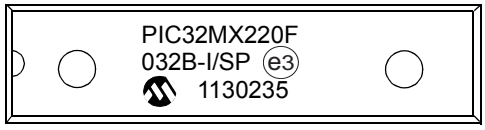

28-Lead SSOP

Example

28-Lead QFN

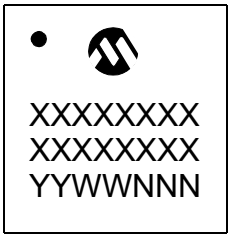

Example

Legend:	XX...X	Customer-specific information
	Y	Year code (last digit of calendar year)
	YY	Year code (last 2 digits of calendar year)
	WW	Week code (week of January 1 is week ‘01’)
	NNN	Alphanumeric traceability code
	e3	Pb-free JEDEC designator for Matte Tin (Sn)
	*	This package is Pb-free. The Pb-free JEDEC designator (e3) can be found on the outer packaging for this package.
Note:	If the full Microchip part number cannot be marked on one line, it is carried over to the next line, thus limiting the number of available characters for customer-specific information.	

33.1 Package Marking Information (Continued)

36-Lead VTLA

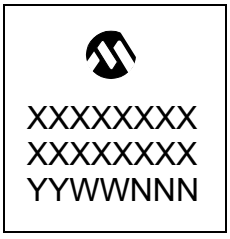

Example

44-Lead VTLA

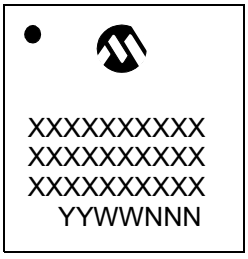

Example

44-Lead QFN

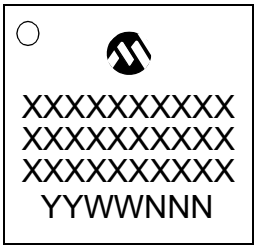

Example

44-Lead TQFP

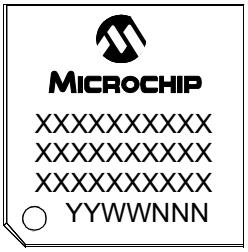

Example

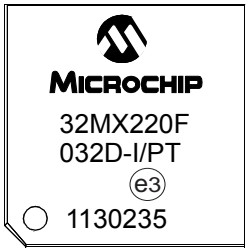

Legend:	XX...X	Customer-specific information
	Y	Year code (last digit of calendar year)
	YY	Year code (last 2 digits of calendar year)
	WW	Week code (week of January 1 is week ‘01’)
	NNN	Alphanumeric traceability code
	e3	Pb-free JEDEC designator for Matte Tin (Sn)
	*	This package is Pb-free. The Pb-free JEDEC designator (e3) can be found on the outer packaging for this package.

Note: If the full Microchip part number cannot be marked on one line, it is carried over to the next line, thus limiting the number of available characters for customer-specific information.

© 2011-2016 Microchip Technology Inc.

33.2 Package Details

This section provides the technical details of the packages.

28-Lead Plastic Shrink Small Outline (SS) – 5.30 mm Body [SSOP]

Note: For the most current package drawings, please see the Microchip Packaging Specification located at http://www.microchip.com/packaging

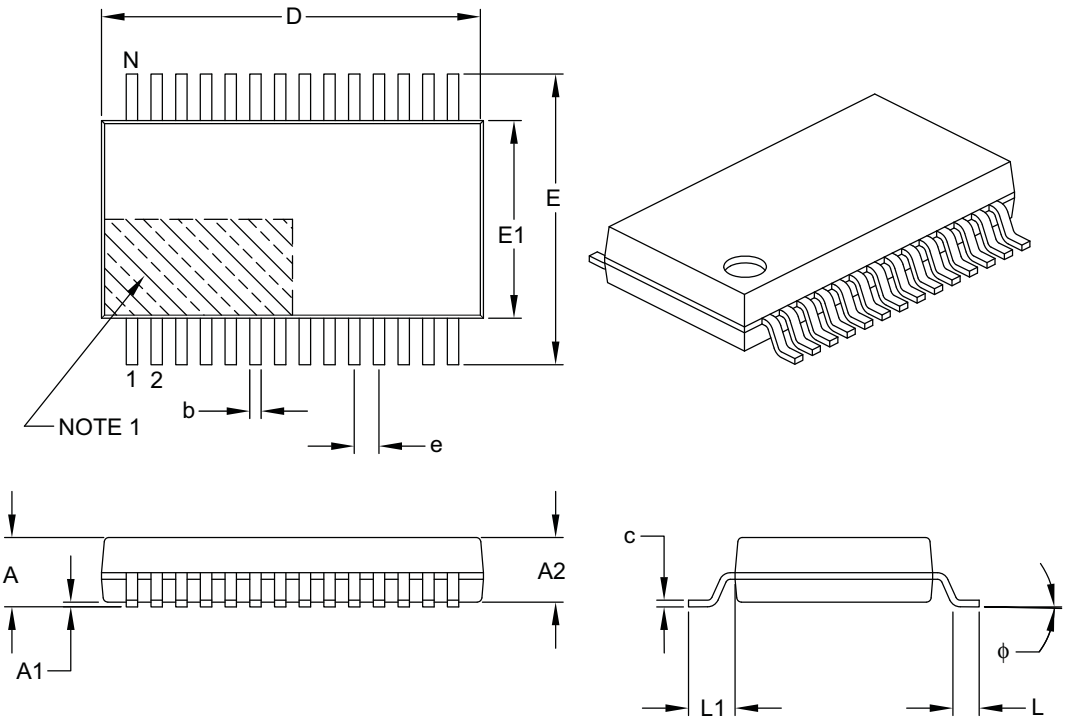

Units		MILLIMETERS		
Dimension Limits		MIN	NOM	MAX
Number of Pins	N	28		
Pitch	e	0.65 BSC		
Overall Height	A	–	–	2.00
Molded Package Thickness	A2	1.65	1.75	1.85
Standoff	A1	0.05	–	–
Overall Width	E	7.40	7.80	8.20
Molded Package Width	E1	5.00	5.30	5.60
Overall Length	D	9.90	10.20	10.50
Foot Length	L	0.55	0.75	0.95
Footprint	L1	1.25 REF		
Lead Thickness	c	0.09	–	0.25
Foot Angle	ϕ	0°	4°	8°
Lead Width	b	0.22	–	0.38

Notes:

1. Pin 1 visual index feature may vary, but must be located within the hatched area.
2. Dimensions D and E1 do not include mold flash or protrusions. Mold flash or protrusions shall not exceed 0.20 mm per side.
3. Dimensioning and tolerancing per ASME Y14.5M.

   BSC: Basic Dimension. Theoretically exact value shown without tolerances.
   REF: Reference Dimension, usually without tolerance, for information purposes only.

Microchip Technology Drawing C04-073B

28-Lead Plastic Shrink Small Outline (SS) - 5.30 mm Body [SSOP]

Note: For the most current package drawings, please see the Microchip Packaging Specification located at http://www.microchip.com/packaging

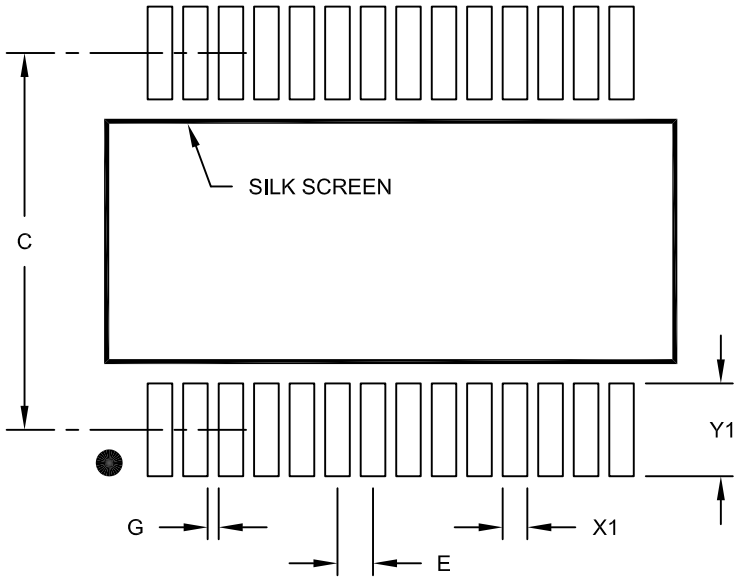

RECOMMENDED LAND PATTERN

Units		MILLIMETERS		
Dimension Limits		MIN	NOM	MAX
Contact Pitch	E		0.65 BSC	
Contact Pad Spacing	C		7.20	
Contact Pad Width (X28)	X1			0.45
Contact Pad Length (X28)	Y1			1.75
Distance Between Pads	G	0.20		

Notes:

1. Dimensioning and tolerancing per ASME Y14.5M

BSC: Basic Dimension. Theoretically exact value shown without tolerances.

Microchip Technology Drawing No. C04-2073A

© 2011-2016 Microchip Technology Inc.

28-Lead Skinny Plastic Dual In-Line (SP) – 300 mil Body [SPDIP]

Note: For the most current package drawings, please see the Microchip Packaging Specification located at http://www.microchip.com/packaging

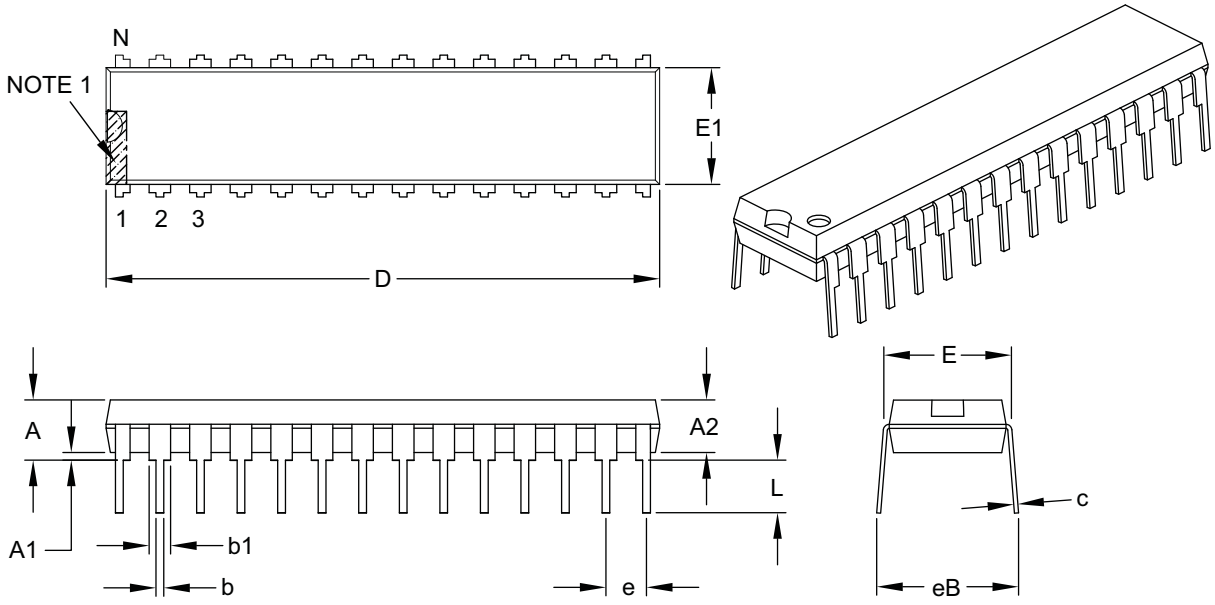

Units		INCHES		
Dimension Limits		MIN	NOM	MAX
Number of Pins	N	28		
Pitch	e	.100 BSC		
Top to Seating Plane	A	–	–	.200
Molded Package Thickness	A2	.120	.135	.150
Base to Seating Plane	A1	.015	–	–
Shoulder to Shoulder Width	E	.290	.310	.335
Molded Package Width	E1	.240	.285	.295
Overall Length	D	1.345	1.365	1.400
Tip to Seating Plane	L	.110	.130	.150
Lead Thickness	c	.008	.010	.015
Upper Lead Width	b1	.040	.050	.070
Lower Lead Width	b	.014	.018	.022
Overall Row Spacing §	eB	–	–	.430

Notes:
1. Pin 1 visual index feature may vary, but must be located within the hatched area.
2. § Significant Characteristic.
3. Dimensions D and E1 do not include mold flash or protrusions. Mold flash or protrusions shall not exceed .010" per side.
4. Dimensioning and tolerancing per ASME Y14.5M.
   BSC: Basic Dimension. Theoretically exact value shown without tolerances.

Microchip Technology Drawing C04-070B

28-Lead Plastic Small Outline (SO) - Wide, 7.50 mm Body [SOIC]

Note: For the most current package drawings, please see the Microchip Packaging Specification located at http://www.microchip.com/packaging

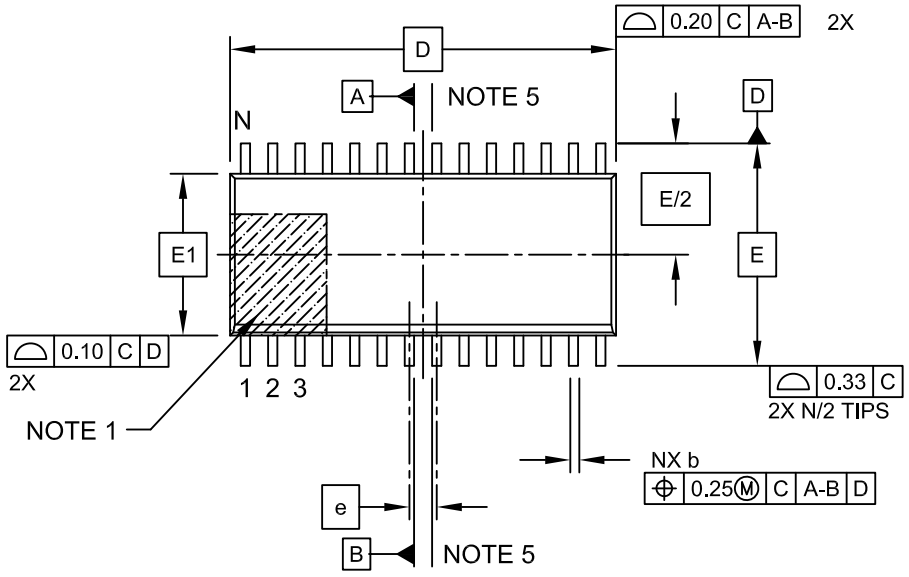

TOP VIEW

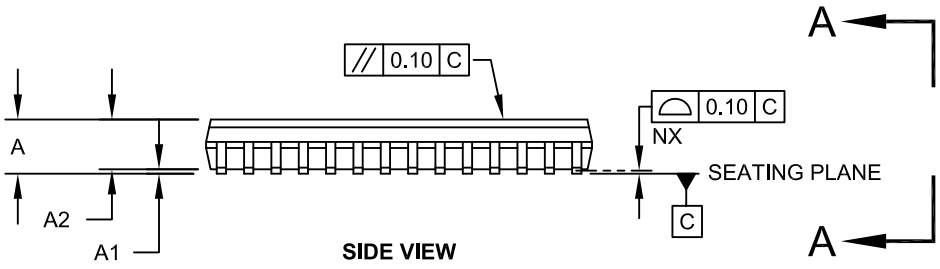

SIDE VIEW

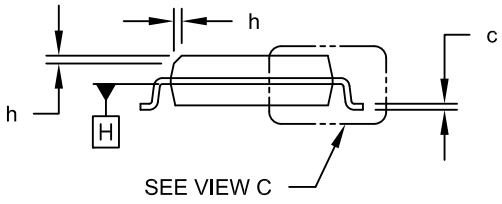

VIEW A-A

Microchip Technology Drawing C04-052C Sheet 1 of 2

© 2011-2016 Microchip Technology Inc.

28-Lead Plastic Small Outline (SO) - Wide, 7.50 mm Body [SOIC]

Note: For the most current package drawings, please see the Microchip Packaging Specification located at http://www.microchip.com/packaging

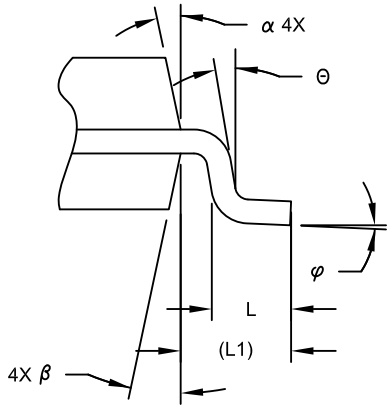

VIEW C

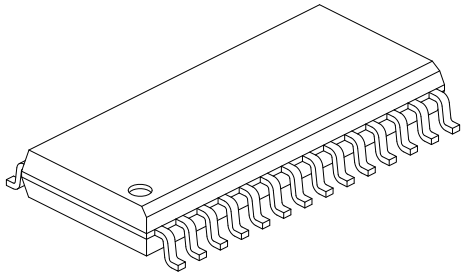

Units		MILLIMETERS		
Dimension Limits		MIN	NOM	MAX
Number of Pins	N	28		
Pitch	e	1.27 BSC		
Overall Height	A	-	-	2.65
Molded Package Thickness	A2	2.05	-	-
Standoff §	A1	0.10	-	0.30
Overall Width	E	10.30 BSC		
Molded Package Width	E1	7.50 BSC		
Overall Length	D	17.90 BSC		
Chamfer (Optional)	h	0.25	-	0.75
Foot Length	L	0.40	-	1.27
Footprint	L1	1.40 REF		
Lead Angle	Θ	0°	-	-
Foot Angle	φ	0°	-	8°
Lead Thickness	c	0.18	-	0.33
Lead Width	b	0.31	-	0.51
Mold Draft Angle Top	α	5°	-	15°
Mold Draft Angle Bottom	β	5°	-	15°

Notes:

1. Pin 1 visual index feature may vary, but must be located within the hatched area.
2. § Significant Characteristic
3. Dimension D does not include mold flash, protrusions or gate burrs, which shall not exceed 0.15 mm per end. Dimension E1 does not include interlead flash or protrusion, which shall not exceed 0.25 mm per side.
4. Dimensioning and tolerancing per ASME Y14.5M
   BSC: Basic Dimension. Theoretically exact value shown without tolerances.
   REF: Reference Dimension, usually without tolerance, for information purposes only.
5. Datums A & B to be determined at Datum H.

Microchip Technology Drawing C04-052C Sheet 2 of 2

28-Lead Plastic Small Outline (SO) - Wide, 7.50 mm Body [SOIC]

Note: For the most current package drawings, please see the Microchip Packaging Specification located at http://www.microchip.com/packaging

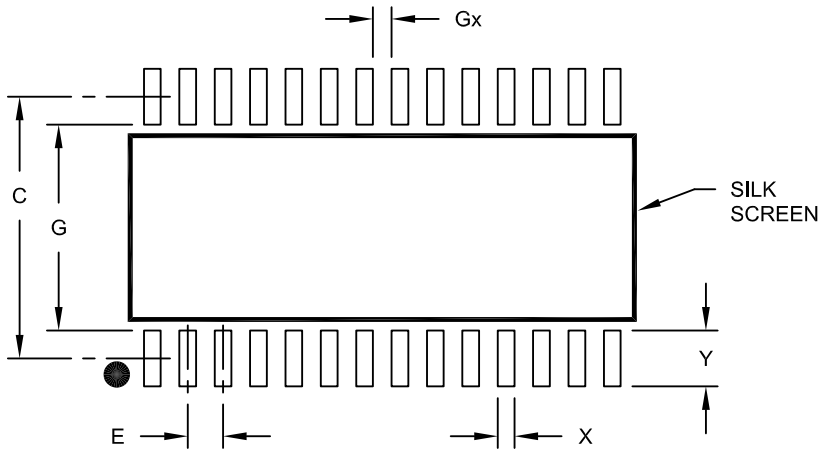

RECOMMENDED LAND PATTERN

Units		MILLIMETERS		
Dimension Limits		MIN	NOM	MAX
Contact Pitch	E		1.27 BSC	
Contact Pad Spacing	C		9.40	
Contact Pad Width (X28)	X			0.60
Contact Pad Length (X28)	Y			2.00
Distance Between Pads	Gx	0.67		
Distance Between Pads	G	7.40		

Notes:

1. Dimensioning and tolerancing per ASME Y14.5M
   BSC: Basic Dimension. Theoretically exact value shown without tolerances.

Microchip Technology Drawing No. C04-2052A

© 2011-2016 Microchip Technology Inc.

28-Lead Plastic Quad Flat, No Lead Package (ML) – 6x6 mm Body [QFN] with 0.55 mm Contact Length

Note: For the most current package drawings, please see the Microchip Packaging Specification located at http://www.microchip.com/packaging

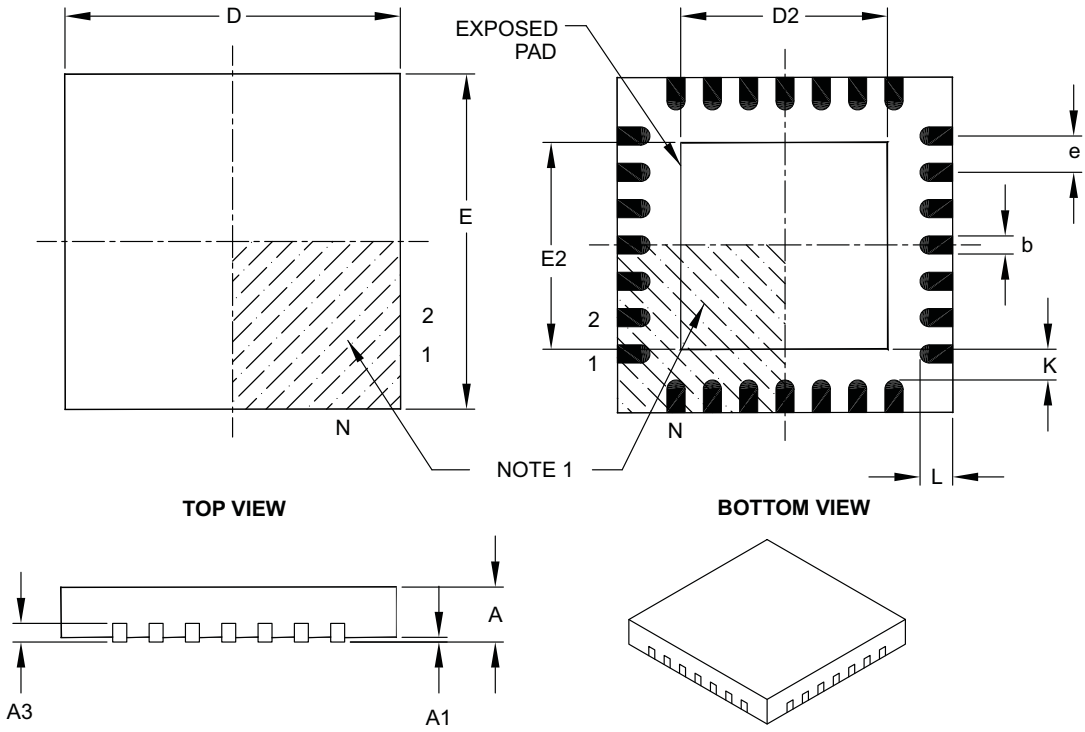

Units		MILLIMETERS		
Dimension Limits		MIN	NOM	MAX
Number of Pins	N	28		
Pitch	e	0.65 BSC		
Overall Height	A	0.80	0.90	1.00
Standoff	A1	0.00	0.02	0.05
Contact Thickness	A3	0.20 REF		
Overall Width	E	6.00 BSC		
Exposed Pad Width	E2	3.65	3.70	4.20
Overall Length	D	6.00 BSC		
Exposed Pad Length	D2	3.65	3.70	4.20
Contact Width	b	0.23	0.30	0.35
Contact Length	L	0.50	0.55	0.70
Contact-to-Exposed Pad	K	0.20	–	–

Notes:

1. Pin 1 visual index feature may vary, but must be located within the hatched area.
2. Package is saw singulated.
3. Dimensioning and tolerancing per ASME Y14.5M.
   BSC: Basic Dimension. Theoretically exact value shown without tolerances.
   REF: Reference Dimension, usually without tolerance, for information purposes only.

Microchip Technology Drawing C04-105B

28-Lead Plastic Quad Flat, No Lead Package (ML) – 6x6 mm Body [QFN] with 0.55 mm Contact Length

Note: For the most current package drawings, please see the Microchip Packaging Specification located at http://www.microchip.com/packaging

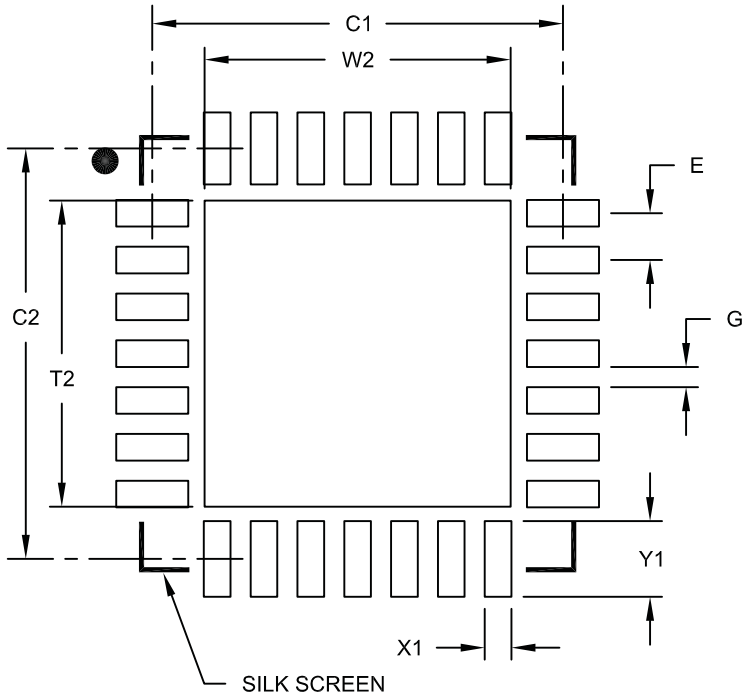

RECOMMENDED LAND PATTERN

Units		MILLIMETERS		
Dimension Limits		MIN	NOM	MAX
Contact Pitch	E		0.65 BSC	
Optional Center Pad Width	W2			4.25
Optional Center Pad Length	T2			4.25
Contact Pad Spacing	C1		5.70	
Contact Pad Spacing	C2		5.70	
Contact Pad Width (X28)	X1			0.37
Contact Pad Length (X28)	Y1			1.00
Distance Between Pads	G	0.20		

Notes:

1. Dimensioning and tolerancing per ASME Y14.5M
   BSC: Basic Dimension. Theoretically exact value shown without tolerances.

Microchip Technology Drawing No. C04-2105A

© 2011-2016 Microchip Technology Inc.

36-Terminal Very Thin Thermal Leadless Array Package (TL) – 5x5x0.9 mm Body with Exposed Pad [VTLA]

Note: For the most current package drawings, please see the Microchip Packaging Specification located at http://www.microchip.com/packaging

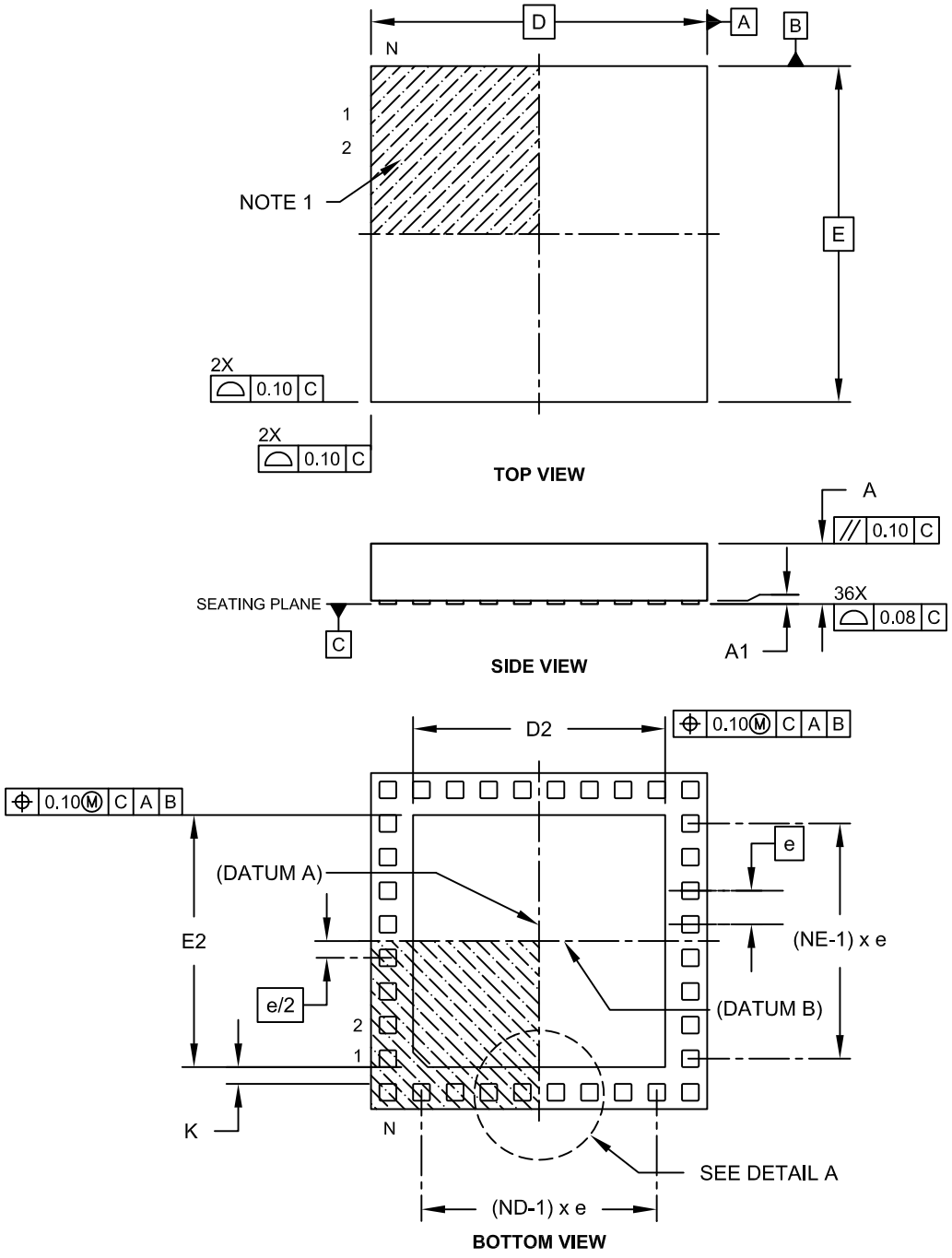

Microchip Technology Drawing C04-187C Sheet 1 of 2

36-Terminal Very Thin Thermal Leadless Array Package (TL) – 5x5x0.9 mm Body with Exposed Pad [VTLA]

Note: For the most current package drawings, please see the Microchip Packaging Specification located at http://www.microchip.com/packaging

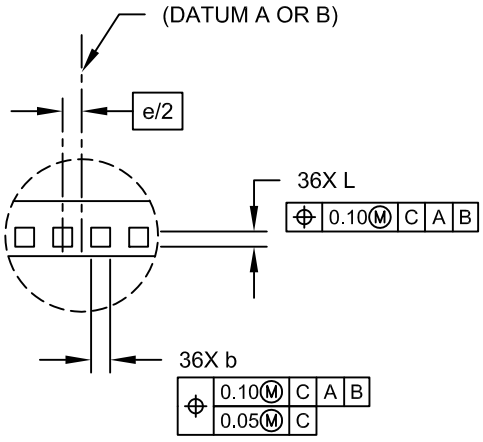

DETAIL A

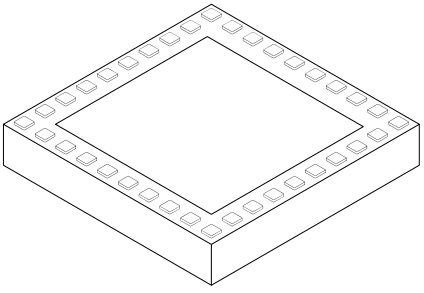

	Units	MILLIMETERS		
Dimension	Limits	MIN	NOM	MAX
Number of Pins	N	36		
Number of Pins per Side	ND	10		
Number of Pins per Side	NE	8		
Pitch	e	0.50 BSC		
Overall Height	A	0.80	0.90	1.00
Standoff	A1	0.025	-	0.075
Overall Width	E	5.00 BSC		
Exposed Pad Width	E2	3.60	3.75	3.90
Overall Length	D	5.00 BSC		
Exposed Pad Length	D2	3.60	3.75	3.90
Contact Width	b	0.20	0.25	0.30
Contact Length	L	0.20	0.25	0.30
Contact-to-Exposed Pad	K	0.20	-	-

Notes:

1. Pin 1 visual index feature may vary, but must be located within the hatched area.
2. Package is saw singulated.
3. Dimensioning and tolerancing per ASME Y14.5M.
   BSC: Basic Dimension. Theoretically exact value shown without tolerances.
   REF: Reference Dimension, usually without tolerance, for information purposes only.

Microchip Technology Drawing C04-187C Sheet 2 of 2

© 2011-2016 Microchip Technology Inc.

44-Terminal Very Thin Leadless Array Package (TL) – 6x6x0.9 mm Body With Exposed Pad [VTLA]

Note: For the most current package drawings, please see the Microchip Packaging Specification located at http://www.microchip.com/packaging

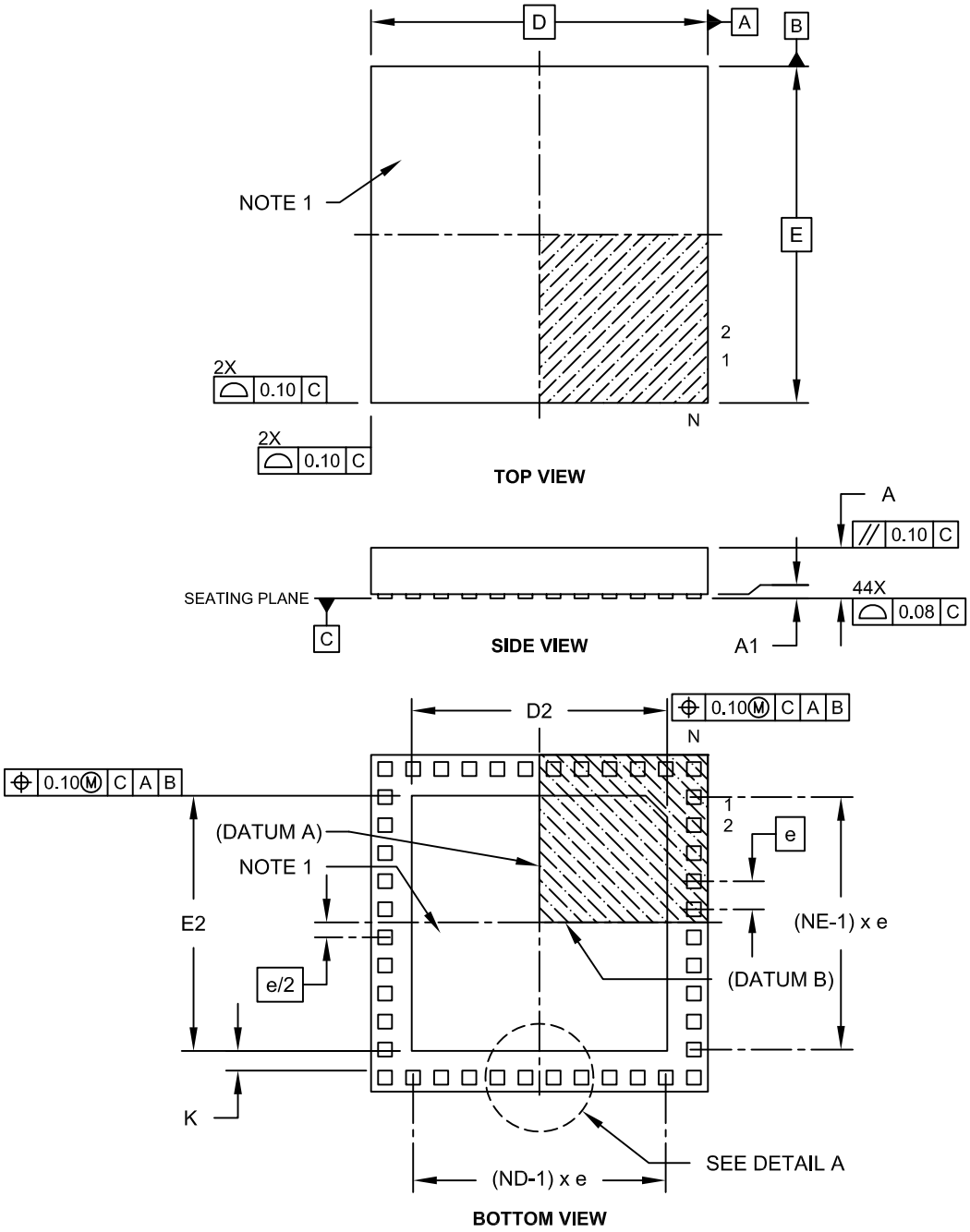

Microchip Technology Drawing C04-157C Sheet 1 of 2

44-Terminal Very Thin Leadless Array Package (TL) – 6x6x0.9 mm Body With Exposed Pad [VTLA]

Note: For the most current package drawings, please see the Microchip Packaging Specification located at http://www.microchip.com/packaging

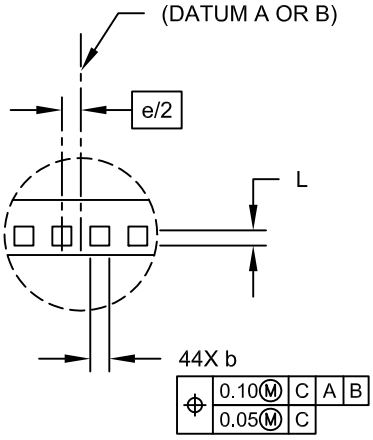

DETAIL A

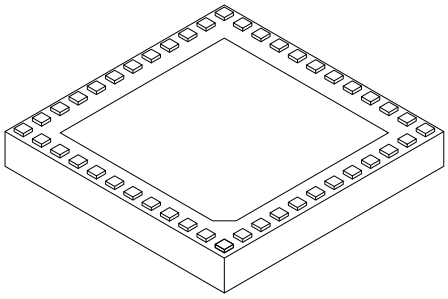

	Units	MILLIMETERS		
Dimension	Limits	MIN	NOM	MAX
Number of Pins	N		44	
Number of Pins per Side	ND		12	
Number of Pins per Side	NE		10	
Pitch	e		0.50 BSC	
Overall Height	A	0.80	0.90	1.00
Standoff	A1	0.025	-	0.075
Overall Width	E		6.00 BSC	
Exposed Pad Width	E2	4.40	4.55	4.70
Overall Length	D		6.00 BSC	
Exposed Pad Length	D2	4.40	4.55	4.70
Contact Width	b	0.20	0.25	0.30
Contact Length	L	0.20	0.25	0.30
Contact-to-Exposed Pad	K	0.20	-	-

Notes:

1. Pin 1 visual index feature may vary, but must be located within the hatched area.
2. Package is saw singulated.
3. Dimensioning and tolerancing per ASME Y14.5M.
   BSC: Basic Dimension. Theoretically exact value shown without tolerances.
   REF: Reference Dimension, usually without tolerance, for information purposes only.

Microchip Technology Drawing C04-157C Sheet 2 of 2

© 2011-2016 Microchip Technology Inc.

44-Lead Plastic Quad Flat, No Lead Package (ML) – 8x8 mm Body [QFN]

Note: For the most current package drawings, please see the Microchip Packaging Specification located at http://www.microchip.com/packaging

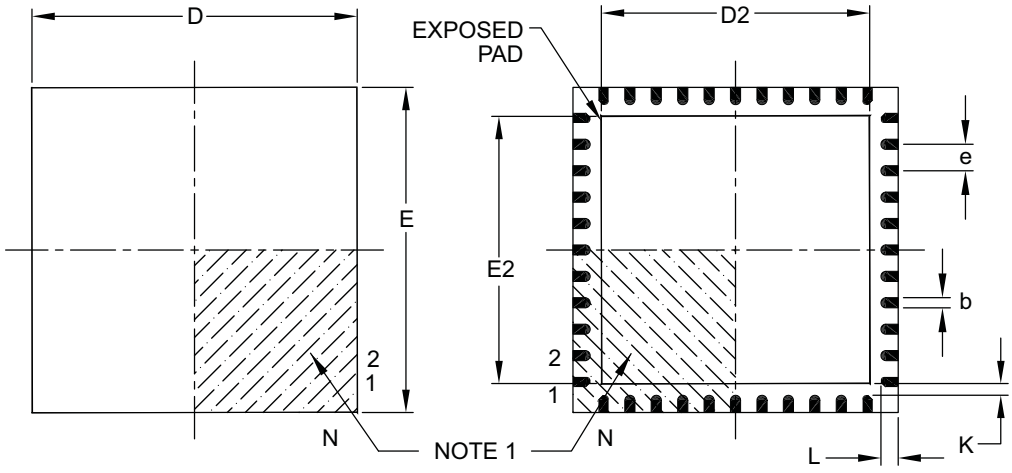

TOP VIEW **BOTTOM VIEW**

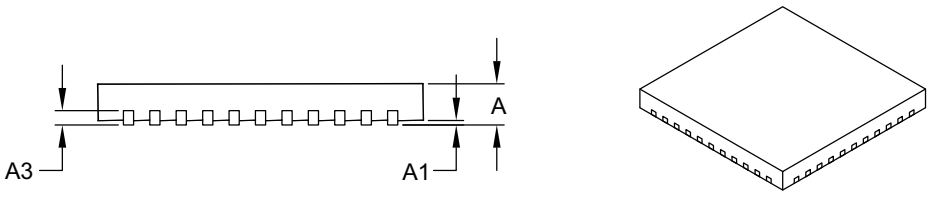

Units		MILLIMETERS		
Dimension Limits		MIN	NOM	MAX
Number of Pins	N	44		
Pitch	e	0.65 BSC		
Overall Height	A	0.80	0.90	1.00
Standoff	A1	0.00	0.02	0.05
Contact Thickness	A3	0.20 REF		
Overall Width	E	8.00 BSC		
Exposed Pad Width	E2	6.30	6.45	6.80
Overall Length	D	8.00 BSC		
Exposed Pad Length	D2	6.30	6.45	6.80
Contact Width	b	0.25	0.30	0.38
Contact Length	L	0.30	0.40	0.50
Contact-to-Exposed Pad	K	0.20	–	–

Notes:

1. Pin 1 visual index feature may vary, but must be located within the hatched area.
2. Package is saw singulated.
3. Dimensioning and tolerancing per ASME Y14.5M.
   BSC: Basic Dimension. Theoretically exact value shown without tolerances.
   REF: Reference Dimension, usually without tolerance, for information purposes only.

Microchip Technology Drawing C04-103B

44-Lead Plastic Quad Flat, No Lead Package (ML) – 8x8 mm Body [QFN]

Note: For the most current package drawings, please see the Microchip Packaging Specification located at http://www.microchip.com/packaging

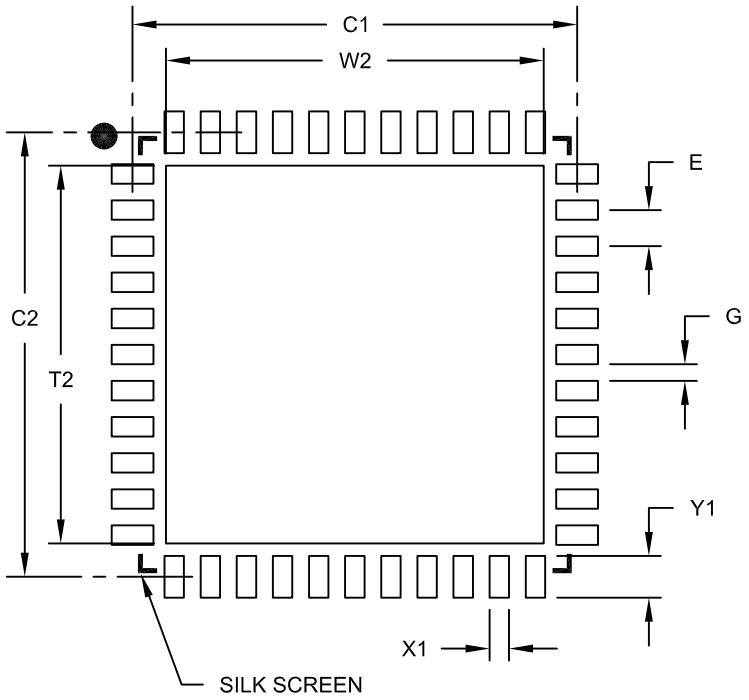

RECOMMENDED LAND PATTERN

Units		MILLIMETERS		
Dimension Limits		MIN	NOM	MAX
Contact Pitch	E		0.65 BSC	
Optional Center Pad Width	W2			6.80
Optional Center Pad Length	T2			6.80
Contact Pad Spacing	C1		8.00	
Contact Pad Spacing	C2		8.00	
Contact Pad Width (X44)	X1			0.35
Contact Pad Length (X44)	Y1			0.80
Distance Between Pads	G	0.25		

Notes:

1. Dimensioning and tolerancing per ASME Y14.5M
   BSC: Basic Dimension. Theoretically exact value shown without tolerances.

Microchip Technology Drawing No. C04-2103A

© 2011-2016 Microchip Technology Inc.

44-Lead Plastic Thin Quad Flatpack (PT) – 10x10x1 mm Body, 2.00 mm [TQFP]

Note: For the most current package drawings, please see the Microchip Packaging Specification located at http://www.microchip.com/packaging

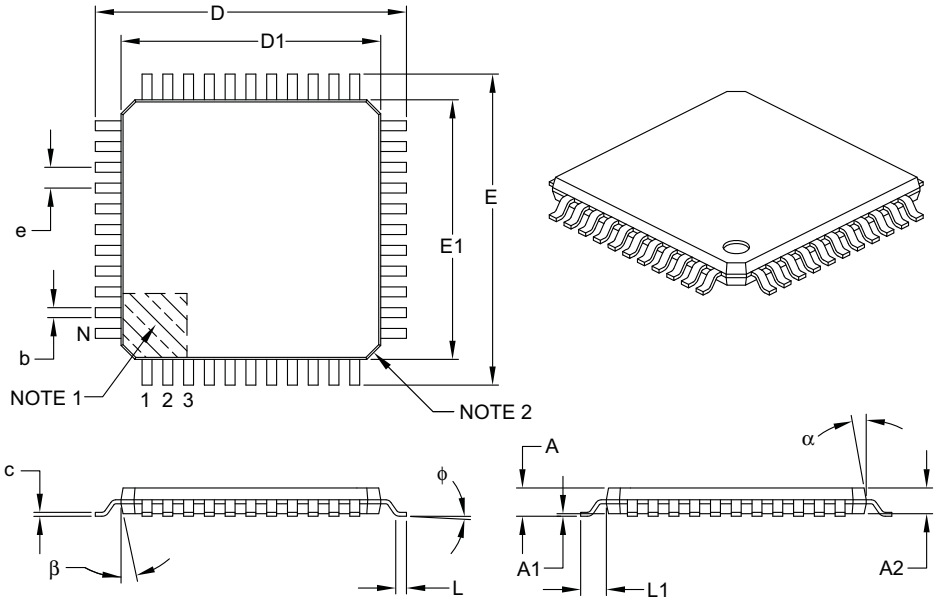

Units		MILLIMETERS		
Dimension Limits		MIN	NOM	MAX
Number of Leads	N	44		
Lead Pitch	e	0.80 BSC		
Overall Height	A	–	–	1.20
Molded Package Thickness	A2	0.95	1.00	1.05
Standoff	A1	0.05	–	0.15
Foot Length	L	0.45	0.60	0.75
Footprint	L1	1.00 REF		
Foot Angle	ϕ	0°	3.5°	7°
Overall Width	E	12.00 BSC		
Overall Length	D	12.00 BSC		
Molded Package Width	E1	10.00 BSC		
Molded Package Length	D1	10.00 BSC		
Lead Thickness	c	0.09	–	0.20
Lead Width	b	0.30	0.37	0.45
Mold Draft Angle Top	α	11°	12°	13°
Mold Draft Angle Bottom	β	11°	12°	13°

Notes:

1. Pin 1 visual index feature may vary, but must be located within the hatched area.
2. Chamfers at corners are optional; size may vary.
3. Dimensions D1 and E1 do not include mold flash or protrusions. Mold flash or protrusions shall not exceed 0.25 mm per side.
4. Dimensioning and tolerancing per ASME Y14.5M.
   BSC: Basic Dimension. Theoretically exact value shown without tolerances.
   REF: Reference Dimension, usually without tolerance, for information purposes only.

Microchip Technology Drawing C04-076B

44-Lead Plastic Thin Quad Flatpack (PT) 10X10X1 mm Body, 2.00 mm Footprint [TQFP]

Note: For the most current package drawings, please see the Microchip Packaging Specification located at http://www.microchip.com/packaging

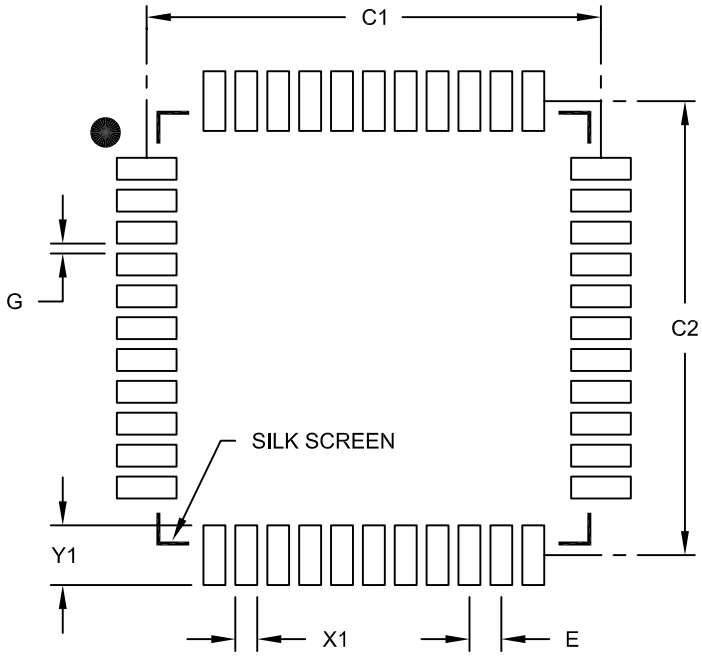

RECOMMENDED LAND PATTERN

Units		MILLIMETERS		
Dimension Limits		MIN	NOM	MAX
Contact Pitch	E	0.80 BSC		
Contact Pad Spacing	C1		11.40	
Contact Pad Spacing	C2		11.40	
Contact Pad Width (X44)	X1			0.55
Contact Pad Length (X44)	Y1			1.50
Distance Between Pads	G	0.25		

Notes:

1. Dimensioning and tolerancing per ASME Y14.5M
   BSC: Basic Dimension. Theoretically exact value shown without tolerances.

Microchip Technology Drawing No. C04-2076B

© 2011-2016 Microchip Technology Inc.

APPENDIX A: REVISION HISTORY

Revision A (May 2011)

This is the initial released version of this document.

Revision B (October 2011)

The following two global changes are included in this revision:

- All packaging references to VLAP have been changed to VTLA throughout the document
- All references to VCORE have been removed
- All occurrences of the ASCL1, ASCL2, ASDA1, and ASDA2 pins have been removed
- V-temp temperature range (-40ºC to +105ºC) was added to all electrical specification tables

This revision includes the addition of the following devices:

- PIC32MX130F064B
- PIC32MX130F064C
- PIC32MX130F064D
- PIC32MX150F128B
- PIC32MX150F128C
- PIC32MX150F128D
- PIC32MX230F064B
- PIC32MX230F064C
- PIC32MX230F064D
- PIC32MX250F128B
- PIC32MX250F128C
- PIC32MX250F128D

Text and formatting changes were incorporated throughout the document.

All other major changes are referenced by their respective section in Table A-1.

TABLE A-1: MAJOR SECTION UPDATES

Section	Update Description
"32-bit Microcontrollers (up to 128 KB Flash and 32 KB SRAM) with Audio and Graphics Interfaces, USB, and Advanced Analog**"**	Split the existing Features table into two: PIC32MX1XX General Purpose Family Features (Table 1) and PIC32MX2XX USB Family Features (Table 2). Added the SPDIP package reference (see Table 1, Table 2, and **"Pin Diagrams"**). Added the new devices to the applicable pin diagrams. Changed PGED2 to PGED1 on pin 35 of the 36-pin VTLA diagram for PIC32MX220F032C, PIC32MX220F016C, PIC32MX230F064C, and PIC32MX250F128C devices.
1.0 "Device Overview"	Added the SPDIP package reference and updated the pin number for AN12 for 44-pin QFN devices in the Pinout I/O Descriptions (see Table 1-1). Added the PGEC4/PGED4 pin pair and updated the C1INA-C1IND and C2INA-C2IND pin numbers for 28-pin SSOP/SPDIP/SOIC devices in the Pinout I/O Descriptions (see Table 1-1).
2.0 "Guidelines for Getting Started with 32-bit Microcontrollers"	Updated the Recommended Minimum Connection diagram (see Figure 2-1).

TABLE A-1: MAJOR SECTION UPDATES (CONTINUED)

Section	Update Description
4.0 “Memory Organization”	Added Memory Maps for the new devices (see Figure 4-3 and Figure 4-4). Removed the BMXCHEDMA bit from the Bus Matrix Register map (see Table 4-1). Added the REFOTRIM register, added the DIVSWEN bit to the REFOCON registers, added Note 4 to the ULOCK and SOSCEN bits and added the PBDIVRDY bit in the OSCCON register in the in the System Control Register map (see Table 4-16). Removed the ALTI2C1 and ALTI2C2 bits from the DEVCFG3 register and added Note 1 to the UPLLEN and UPLLIDIV<2:0> bits of the DEVCFG2 register in the Device Configuration Word Summary (see Table 4-17). Updated Note 1 in the Device and Revision ID Summary (see Table 4-18). Added Note 2 to the PORTA Register map (see Table 4-19). Added the ANSB6 and ANSB12 bits to the ANSELB register in the PORTB Register map (see Table 4-20). Added Notes 2 and 3 to the PORTC Register map (see Table 4-21). Updated all register names in the Peripheral Pin Select Register map (see Table 4-23). Added values in support of new devices (16 KB RAM and 32 KB RAM) in the Data RAM Size register (see Register 4-5). Added values in support of new devices (64 KB Flash and 128 KB Flash) in the Data RAM Size register (see Register 4-5).
8.0 “Oscillator Configuration”	Added Note 5 to the PIC32MX1XX/2XX Family Clock Diagram (see Figure 8-1). Added the PBDIVRDY bit and Note 2 to the Oscillator Control register (see Register 8-1). Added the DIVSWEN bit and Note 3 to the Reference Oscillator Control register (see Register 8-3). Added the REFOTRIM register (see Register 8-4).
21.0 “10-bit Analog-to-Digital Converter (ADC)”	Updated the ADC1 Module Block Diagram (see Figure 21-1). Updated the Notes in the ADC Input Select register (see Register 21-4).
24.0 “Charge Time Measurement Unit (CTMU)”	Updated the CTMU Block Diagram (see Figure 24-1). Added Note 3 to the CTMU Control register (see Register 24-1)
26.0 “Special Features”	Added Note 1 and the PGEC4/PGED4 pin pair to the ICESEL<1:0> bits in DEVCFG0: Device Configuration Word 0 (see Register 26-1). Removed the ALTI2C1 and ALTI2C2 bits from the Device Configuration Word 3 register (see Register 26-4). Removed 26.3.3 “Power-up Requirements”. Added Note 3 to the Connections for the On-Chip Regulator diagram (see Figure 26-2). Updated the Block Diagram of Programming, Debugging and Trace Ports diagram (see Figure 26-3).

© 2011-2016 Microchip Technology Inc.

TABLE A-1: MAJOR SECTION UPDATES (CONTINUED)

Section	Update Description
29.0 "Electrical Characteristics"	Updated the Absolute Maximum Ratings (removed Voltage on VCORE with respect to VSS). Added the SPDIP specification to the Thermal Packaging Characteristics (see Table 29-2). Updated the Typical values for parameters DC20-DC24 in the Operating Current (IDD) specification (see Table 29-5). Updated the Typical values for parameters DC30a-DC34a in the Idle Current (IIDLE) specification (see Table 29-6). Updated the Typical values for parameters DC40i and DC40n and removed parameter DC40m in the Power-down Current (IPD) specification (see Table 29-7). Removed parameter D320 (VCORE) from the Internal Voltage Regulator Specifications and updated the Comments (see Table 29-13). Updated the Minimum, Typical, and Maximum values for parameter F20b in the Internal FRC Accuracy specification (see Table 29-17). Removed parameter SY01 (TPWRT) and removed all Conditions from Resets Timing (see Table 29-20). Updated all parameters in the CTMU Specifications (see Table 29-39).
31.0 "Packaging Information"	Added the 28-lead SPDIP package diagram information (see **31.1 "Package Marking Information"** and **31.2 "Package Details"**).
"Product Identification System"	Added the SPDIP (SP) package definition.

Revision C (November 2011)

All major changes are referenced by their respective section in Table A-2.

TABLE A-2: MAJOR SECTION UPDATES

Section	Update Description
"32-bit Microcontrollers (up to 128 KB Flash and 32 KB SRAM) with Audio and Graphics Interfaces, USB, and Advanced Analog"	Revised the source/sink on I/O pins (see **"Input/Output"** on page 1). Added the SPDIP package to the PIC32MX220F032B device in the PIC32MX2XX USB Family Features (see Table 2).
4.0 "Memory Organization"	Removed ANSB6 from the ANSELB register and added the ODCB6, ODCB10, and ODCB11 bits in the PORTB Register Map (see Table 4-20).
29.0 "Electrical Characteristics"	Updated the minimum value for parameter OS50 in the PLL Clock Timing Specifications (see Table 29-16).

Revision D (February 2012)

All occurrences of V_{USB} were changed to: V_{USB3V3}. In addition, text and formatting changes were incorporated throughout the document.

All other major changes are referenced by their respective section in Table A-3.

TABLE A-3: MAJOR SECTION UPDATES

Section	Update Description
"32-bit Microcontrollers (up to 128 KB Flash and 32 KB SRAM) with Audio and Graphics Interfaces, USB, and Advanced Analog"	Corrected a part number error in all pin diagrams. Updated the DMA Channels (Programmable/Dedicated) column in the PIC32MX1XX General Purpose Family Features (see Table 1).
1.0 "Device Overview"	Added the TQFP and VTLA packages to the 44-pin column heading and updated the pin numbers for the SCL1, SCL2, SDA1, and SDA2 pins in the Pinout I/O Descriptions (see Table 1-1).
7.0 "Interrupt Controller"	Updated the Note that follows the features. Updated the Interrupt Controller Block Diagram (see Figure 7-1).
29.0 "Electrical Characteristics"	Updated the Maximum values for parameters DC20-DC24, and the Minimum value for parameter DC21 in the Operating Current (I_{DD}) DC Characteristics (see Table 29-5). Updated all Minimum and Maximum values for the Idle Current (I_{IDLE}) DC Characteristics (see Table 29-6). Updated the Maximum values for parameters DC40k, DC40l, DC40n, and DC40m in the Power-down Current (I_{PD}) DC Characteristics (see Table 29-7). Changed the minimum clock period for SCKx from 40 ns to 50 ns in Note 3 of the SPIx Master and Slave Mode Timing Requirements (see Table 29-26 through Table 29-29).
30.0 "DC and AC Device Characteristics Graphs"	Updated the Typical I_{IDLE} Current @ V_{DD} = 3.3V graph (see Figure 30-5).

© 2011-2016 Microchip Technology Inc.

Revision E (October 2012)

All singular pin diagram occurrences of CVREF were changed to: CVREFOUT. In addition, minor text and formatting changes were incorporated throughout the document.

All major changes are referenced by their respective section in Table A-4.

TABLE A-4: MAJOR SECTION UPDATES

Section	Update Description
"32-bit Microcontrollers (up to 128 KB Flash and 32 KB SRAM) with Audio and Graphics Interfaces, USB, and Advanced Analog"	Updated the following feature sections: • **"Operating Conditions"** • **"Communication Interfaces"**
2.0 "Guidelines for Getting Started with 32-bit MCUs"	Removed Section 2.8 "Configuration of Analog and Digital Pins During ICSP Operations".
3.0 "CPU"	Removed references to GPR shadow registers in **3.1 "Features"** and **3.2.1 "Execution Unit"**.
4.0 "Memory Organization"	Updated the BRG bit range in the SPI1 and SPI2 Register Map (see Table 4-8). Added the PWP<6> bit to the Device Configuration Word Summary (see Table 4-17).
5.0 "Flash Program Memory"	Added a note with Flash page size and row size information.
7.0 "Interrupt Controller"	Updated the TPC<2:0> bit definitions (see Register 7-1). Updated the IPTMR<31:0> bit definition (see Register 7-3).
8.0 "Oscillator Configuration"	Updated the PIC32MX1XX/2XX Family Clock Diagram (see Figure 8-1). Updated the RODIV<14:0> bit definitions (see Register 8-3).
10.0 "USB On-The-Go (OTG)"	Updated the Notes in the USB Interface Diagram (see Figure 10-1).
18.0 "Universal Asynchronous Receiver Transmitter (UART)"	Updated the baud rate range in the list of primary features.
26.0 "Special Features"	Added the PWP<6> bit to the Device Configuration Word 0 (see Register 26-1).
29.0 "Electrical Characteristics"	Added Note 1 to Operating MIPS vs. Voltage (see Table 29-1). Added Note 2 to DC Temperature and Voltage Specifications (see Table 29-4). Updated the Conditions for parameter DC25 in DC Characteristics: Operating Current (IDD) (see Table 29-5). Added Note 2 to Electrical Characteristics: BOR (see Table 29-10). Added Note 4 to Comparator Specifications (see Table 29-12). Added Note 5 to ADC Module Specifications (see Table 29-32). Updated the 10-bit Conversion Rate Parameters and added Note 3 (see Table 29-33). Added Note 4 to the Analog-to-Digital Conversion Timing Requirements (see Table 29-34). Added Note 3 to CTMU Current Source Specifications (see Table 29-39).
30.0 "50 MHz Electrical Characteristics"	New chapter with electrical characteristics for 50 MHz devices.
31.0 "Packaging Information"	The 36-pin and 44-pin VTLA packages have been updated.

Revision F (February 2014)

This revision includes the addition of the following devices:

- PIC32MX170F256B
- PIC32MX170F256D
- PIC32MX270F256B
- PIC32MX270F256D

In addition, this revision includes the following major changes as described in Table A-5, as well as minor updates to text and formatting, which were incorporated throughout the document.

TABLE A-5: MAJOR SECTION UPDATES

Section	Update Description
32-bit Microcontrollers (up to 256 KB Flash and 64 KB SRAM) with Audio and Graphics Interfaces, USB, and Advanced Analog	Added new devices to the family features (see Table 1 and Table 2). Updated pin diagrams to include new devices (see **"Pin Diagrams"**).
1.0 "Device Overview"	Added Note 3 reference to the following pin names: VBUS, VUSB3V3, VBUSON, D+, D-, and USBID.
2.0 "Guidelines for Getting Started with 32-bit MCUs"	Replaced Figure 2-1: Recommended Minimum Connection. Updated Figure 2-2: $\overline{\text{MCLR}}$ Pin Connections. Added **2.9 "Sosc Design Recommendation"**.
4.0 "Memory Organization"	Added memory tables for devices with 64 KB RAM (see Table 4-4 through Table 4-5). Changed the Virtual Addresses for all registers and updated the PWP bits in the DEVCFG: Device Configuration Word Summary (see Table 4-17). Updated the ODCA, ODCB, and ODCC port registers (see Table 4-19, Table 4-20, and Table 4-21). The RTCTIME, RTCDATE, ALRMTIME, and ALRMDATE registers were updated (see Table 4-25). Added Data Ram Size value for 64 KB RAM devices (see Register 4-5). Added Program Flash Size value for 256 KB Flash devices (see Register 4-5).
12.0 "Timer1"	The Timer1 block diagram was updated to include the 16-bit data bus (see Figure 12-1).
13.0 "Timer2/3, Timer4/5"	The Timer2-Timer5 block diagram (16-bit) was updated to include the 16-bit data bus (see Figure 13-1). The Timer2/3, Timer4/5 block diagram (32-bit) was updated to include the 32-bit data bus (see Figure 13-1).
19.0 "Parallel Master Port (PMP)"	The CSF<1:0> bit value definitions for '00' and '01' were updated (see Register 19-1). Bit 14 in the Parallel Port Address register (PMADDR) was updated (see Register 19-3).
20.0 "Real-Time Clock and Calendar (RTCC)"	The following registers were updated: RTCTIME (see Register 20-3) RTCDATE (see Register 20-4) ALRMTIME (see Register 20-5) ALRMDATE (see Register 20-6)
26.0 "Special Features"	Updated the PWP bits (see Register 26-1).
29.0 "Electrical Characteristics"	Added parameters DO50 and DO50a to the Capacitive Loading Requirements on Output Pins (see Table 29-14). Added Note 5 to the IDD DC Characteristics (see Table 29-5). Added Note 4 to the IIDLE DC Characteristics (see Table 29-6). Added Note 5 to the IPD DC Characteristics (see Table 29-7). Updated the conditions for parameters USB321 (VOL) and USB322 (VOH) in the OTG Electrical Specifications (see Table 29-38).
Product Identification System	Added 40 MHz speed information.

© 2011-2016 Microchip Technology Inc.

Revision G (April 2015)

This revision includes the addition of the following devices:

- PIC32MX130F256B
- PIC32MX130F256D
- PIC32MX230F256B
- PIC32MX230F256D

The title of the document was updated to avoid confusion with the PIC32MX1XX/2XX/5XX 64/100-pin Family data sheet.

All peripheral SFR maps have been relocated from the Memory chapter to their respective peripheral chapters.

In addition, this revision includes the following major changes as described in Table A-6, as well as minor updates to text and formatting, which were incorporated throughout the document.

TABLE A-6: MAJOR SECTION UPDATES

Section	Update Description
32-bit Microcontrollers (up to 256 KB Flash and 64 KB SRAM) with Audio and Graphics Interfaces, USB, and Advanced Analog	Added new devices to the family features (see Table 1 and Table 2). Updated pin diagrams to include new devices (see Pin Diagrams).
2.0 “Guidelines for Getting Started with 32-bit MCUs”	Updated these sections: **2.2 “Decoupling Capacitors”**, **2.3 “Capacitor on Internal Voltage Regulator (VCAP)”**, **2.4 “Master Clear (MCLR) Pin”**, **2.8.1 “Crystal Oscillator Design Consideration”**
4.0 “Memory Organization”	Added Memory Map for new devices (see Figure 4-6).
14.0 “Watchdog Timer (WDT)”	New chapter created from content previously located in the Special Features chapter.
30.0 “Electrical Characteristics”	Removed parameter D312 (TSET) from the Comparator Specifications (see Table 30-12). Added the Comparator Voltage Reference Specifications (see Table 30-13). Updated Table 30-12.

Revision H (July 2015)

This revision includes the following major changes as described in Table A-7, as well as minor updates to text and formatting, which were incorporated throughout the document.

TABLE A-7: MAJOR SECTION UPDATES

Section	Update Description
2.0 “Guidelines for Getting Started with 32-bit MCUs”	**Section 2.9 “Sosc Design Recommendation”** was removed.
8.0 “Oscillator Configuration”	The Primary Oscillator (POSC) logic in the Oscillator diagram was updated (see Figure 8-1).
30.0 “Electrical Characteristics”	The Power-Down Current (IPD) DC Characteristics parameter DC40k was updated (see Table 30-7). **Table 30-9: “DC Characteristics: I/O Pin Input Injection current Specifications”** was added.

Revision J (April 2016)

This revision includes the following major changes as described in Table A-8, as well as minor updates to text and formatting, which were incorporated throughout the document.

TABLE A-8: MAJOR SECTION UPDATES

Section	Update Description
"32-bit Microcontrollers (up to 256 KB Flash and 64 KB SRAM) with Audio and Graphics Interfaces, USB, and Advanced Analog"	The PIC32MX270FDB device and Note 4 were added to **TABLE 2: "PIC32MX2XX 28/36/44-pin USB Family Features"**.
2.0 "Guidelines for Getting Started with 32-bit MCUs"	**EXAMPLE 2-1: "Crystal Load Capacitor Calculation"** was updated.
30.0 "Electrical Characteristics"	Parameter DO50a (CSOSC) was removed from the Capacitive Loading Requirements on Output Pins AC Characteristics (see Table 30-16).
"Product Identification System"	The device mapping was updated to include type B for Software Targeting.

© 2011-2016 Microchip Technology Inc.

INDEX

Numerics

50 MHz Electrical Characteristics 301

A

AC Characteristics 269
10-Bit Conversion Rate Parameters 291
ADC Specifications 289
Analog-to-Digital Conversion Requirements 292
EJTAG Timing Requirements 300
Internal FRC Accuracy 271
Internal RC Accuracy 271
OTG Electrical Specifications 298
Parallel Master Port Read Requirements 297
Parallel Master Port Write 298
Parallel Master Port Write Requirements 298
Parallel Slave Port Requirements 296
PLL Clock Timing 271
Analog-to-Digital Converter (ADC) 209
Assembler
MPASM Assembler 254

B

Block Diagrams
ADC Module 209
Comparator I/O Operating Modes 219
Comparator Voltage Reference 223
Connections for On-Chip Voltage Regulator 250
Core and Peripheral Modules 19
CPU 33
CTMU Configurations
Time Measurement 227
DMA 83
I2C Circuit 174
Input Capture 157
Interrupt Controller 63
JTAG Programming, Debugging and Trace Ports 250
Output Compare Module 161
PMP Pinout and Connections to External Devices 189
Reset System 59
RTCC 199
SPI Module 165
Timer1 143
Timer2/3/4/5 (16-Bit) 147
Typical Multiplexed Port Structure 127
UART 181
WDT and Power-up Timer 153
Brown-out Reset (BOR)
and On-Chip Voltage Regulator 250

C

C Compilers
MPLAB C18 254
Charge Time Measurement Unit. *See* CTMU.
Clock Diagram 74
Comparator
Specifications 267, 268
Comparator Module 219
Comparator Voltage Reference (CVref 223
Configuration Bit 239
Configuring Analog Port Pins 128
CPU
Architecture Overview 34
Coprocessor 0 Registers 35
Core Exception Types 36
EJTAG Debug Support 36
Power Management 36
CPU Module 27, 33
Customer Change Notification Service 341
Customer Notification Service 341
Customer Support 341

D

DC and AC Characteristics
Graphs and Tables 307
DC Characteristics 258
I/O Pin Input Specifications 263, 264
I/O Pin Output Specifications 265
Idle Current (IIDLE) 261
Power-Down Current (IPD) 262
Program Memory 266
Temperature and Voltage Specifications 259
DC Characteristics (50 MHz) 302
Idle Current (IIDLE) 303
Power-Down Current (IPD) 303
Development Support 253
Direct Memory Access (DMA) Controller 83

E

Electrical Characteristics 257
AC 269
Errata 16
External Clock
Timer1 Timing Requirements 275
Timer2, 3, 4, 5 Timing Requirements 276
Timing Requirements 270
External Clock (50 MHz)
Timing Requirements 304

F

Flash Program Memory 53
RTSP Operation 53

I

I/O Ports 127
Parallel I/O (PIO) 128
Write/Read Timing 128
Input Change Notification 128
Instruction Set 251
Inter-Integrated Circuit (I2C 173
Internal Voltage Reference Specifications 268
Internet Address 341
Interrupt Controller 63
IRG, Vector and Bit Location 64

M

Memory Maps
PIC32MX110/210 Devices
(4 KB RAM, 16 KB Flash) 38
PIC32MX120/220 Devices
(8 KB RAM, 32 KB Flash) 39
PIC32MX130/230
(16 KB RAM, 256 KB Flash) 43
PIC32MX130/230 Devices
(16 KB RAM, 64 KB Flash) 40
PIC32MX150/250 Devices
(32 KB RAM, 128 KB Flash) 41
PIC32MX170/270

(64 KB RAM, 256 KB Flash) 42
Memory Organization 37
Microchip Internet Web Site 341
MPLAB ASM30 Assembler, Linker, Librarian 254
MPLAB Integrated Development Environment Software .. 253
MPLAB PM3 Device Programmer 255
MPLAB REAL ICE In-Circuit Emulator System 255
MPLINK Object Linker/MPLIB Object Librarian 254

O

Oscillator Configuration 73
Output Compare 161

P

Packaging 311
Details 313
Marking 311
Parallel Master Port (PMP) 189
PIC32 Family USB Interface Diagram 104
Pinout I/O Descriptions (table) 20
Power-on Reset (POR)
and On-Chip Voltage Regulator 250
Power-Saving Features 233
CPU Halted Methods 233
Operation 233
with CPU Running 233

R

Real-Time Clock and Calendar (RTCC) 199
Register Maps ..... 45–??
Registers
[*pin name*]R (Peripheral Pin Select Input) 141
AD1CHS (ADC Input Select) 217
AD1CON1 (ADC Control 1) 213
AD1CON2 (ADC Control 2) 215
AD1CON3 (ADC Control 3) 216
AD1CSSL (ADC Input Scan Select) 218
ALRMDATE (Alarm Date Value) 208
ALRMTIME (Alarm Time Value) 207
BMXBOOTSZ (Boot Flash (IFM) Size 51
BMXCON (Bus Matrix Configuration) 46
BMXDKPBA (Data RAM Kernel Program
Base Address) 47
BMXDRMSZ (Data RAM Size Register) 50
BMXDUDBA (Data RAM User Data Base Address) ... 48
BMXDUPBA (Data RAM User Program
Base Address) 49
BMXPFMSZ (Program Flash (PFM) Size) 51
BMXPUPBA (Program Flash (PFM) User Program
Base Address) 50
CFGCON (Configuration Control) 248
CM1CON (Comparator 1 Control) 221
CMSTAT (Comparator Status Register) 222
CNCONx (Change Notice Control for PORTx) 142
CTMUCON (CTMU Control) 229
CVRCON (Comparator Voltage Reference Control). 225
DCHxCON (DMA Channel 'x' Control) 93
DCHxCPTR (DMA Channel 'x' Cell Pointer) 100
DCHxCSIZ (DMA Channel 'x' Cell-Size) 100
DCHxDAT (DMA Channel 'x' Pattern Data) 101
DCHxDPTR (Channel 'x' Destination Pointer) 99
DCHxDSA (DMA Channel 'x' Destination
Start Address) 97
DCHxDSIZ (DMA Channel 'x' Destination Size) 98
DCHxECON (DMA Channel 'x' Event Control) 94
DCHxINT (DMA Channel 'x' Interrupt Control) 95
DCHxSPTR (DMA Channel 'x' Source Pointer) 99
DCHxSSA (DMA Channel 'x' Source Start Address).. 97
DCHxSSIZ (DMA Channel 'x' Source Size) 98
DCRCCON (DMA CRC Control) 90
DCRCDATA (DMA CRC Data) 92
DCRCXOR (DMA CRCXOR Enable) 92
DEVCFG0 (Device Configuration Word 0) 241
DEVCFG1 (Device Configuration Word 1) 243
DEVCFG2 (Device Configuration Word 2) 245
DEVCFG3 (Device Configuration Word 3) 247
DEVID (Device and Revision ID) 249
DMAADDR (DMA Address) 89
DMACON (DMA Controller Control) 88
DMASTAT (DMA Status) 89
I2CxCON (I2C Control) 176
I2CxSTAT (I2C Status) 178
ICxCON (Input Capture 'x' Control) 159
IECx (Interrupt Enable Control) 70
IFSx (Interrupt Flag Status) 70
INTCON (Interrupt Control) 68
INTSTAT (Interrupt Status) 69
IPCx (Interrupt Priority Control) 71
IPTMR (Interrupt Proximity Timer) 69
NVMADDR (Flash Address) 56
NVMCON (Programming Control) 55
NVMDATA (Flash Program Data) 57
NVMKEY (Programming Unlock) 56
NVMSRCADDR (Source Data Address) 57
OCxCON (Output Compare 'x' Control) 163
OSCCON (Oscillator Control) 76
OSCTUN (FRC Tuning) 79
PMADDR (Parallel Port Address) 195
PMAEN (Parallel Port Pin Enable) 196
PMCON (Parallel Port Control) 191
PMMODE (Parallel Port Mode) 193
PMSTAT (Parallel Port Status (Slave Modes Only).. 197
REFOCON (Reference Oscillator Control) 80
REFOTRIM (Reference Oscillator Trim) 82
RPnR (Peripheral Pin Select Output) 141
RSWRST (Software Reset) 62
RTCALRM (RTC Alarm Control) 203
RTCCON (RTC Control) 201
RTCDATE (RTC Date Value) 206
RTCTIME (RTC Time Value) 205
SPIxCON (SPI Control) 167
SPIxCON2 (SPI Control 2) 170
SPIxSTAT (SPI Status) 171
T1CON (Type A Timer Control) 145
TxCON (Type B Timer Control) 150
U1ADDR (USB Address) 121
U1BDTP1 (USB BDT Page 1) 123
U1BDTP2 (USB BDT Page 2) 124
U1BDTP3 (USB BDT Page 3) 124
U1CNFG1 (USB Configuration 1) 125
U1CON (USB Control) 119
U1EIE (USB Error Interrupt Enable) 117
U1EIR (USB Error Interrupt Status) 115
U1EP0-U1EP15 (USB Endpoint Control) 126
U1FRMH (USB Frame Number High) 122
U1FRML (USB Frame Number Low) 121
U1IE (USB Interrupt Enable) 114
U1IR (USB Interrupt) 113
U1OTGCON (USB OTG Control) 111
U1OTGIE (USB OTG Interrupt Enable) 109
U1OTGIR (USB OTG Interrupt Status) 108

© 2011-2016 Microchip Technology Inc.

U1OTGSTAT (USB OTG Status) ... 110
U1PWRC (USB Power Control) ... 112
U1SOF (USB SOF Threshold) ... 123
U1STAT (USB Status) ... 118
U1TOK (USB Token) ... 122
UxMODE (UARTx Mode) ... 183
UxSTA (UARTx Status and Control) ... 185
WDTCON (Watchdog Timer Control) ... 155
Resets ... 59
Revision History ... 329
RTCALRM (RTC ALARM Control) ... 203

S

Serial Peripheral Interface (SPI) ... 165
Software Simulator (MPLAB SIM) ... 255
Special Features ... 239

T

Timer1 Module ... 143
Timer2/3, Timer4/5 Modules ... 147
Timing Diagrams
10-Bit Analog-to-Digital Conversion (ASAM = 0, SSRC<2:0> = 000) ... 293
10-Bit Analog-to-Digital Conversion (ASAM = 1, SSRC<2:0> = 111, SAMC<4:0> = 00001) ... 294
EJTAG ... 300
External Clock ... 269
I/O Characteristics ... 272
I2Cx Bus Data (Master Mode) ... 283
I2Cx Bus Data (Slave Mode) ... 286
I2Cx Bus Start/Stop Bits (Master Mode) ... 283
I2Cx Bus Start/Stop Bits (Slave Mode) ... 286
Input Capture (CAPx) ... 276
OCx/PWM ... 277
Output Compare (OCx) ... 277
Parallel Master Port Read ... 296
Parallel Master Port Write ... 297
Parallel Slave Port ... 295
SPIx Master Mode (CKE = 0) ... 278
SPIx Master Mode (CKE = 1) ... 279
SPIx Slave Mode (CKE = 0) ... 280
SPIx Slave Mode (CKE = 1) ... 281
Timer1, 2, 3, 4, 5 External Clock ... 275
UART Reception ... 187
UART Transmission (8-bit or 9-bit Data) ... 187
Timing Requirements
CLKO and I/O ... 272
Timing Specifications
I2Cx Bus Data Requirements (Master Mode) ... 284
I2Cx Bus Data Requirements (Slave Mode) ... 287
Input Capture Requirements ... 276
Output Compare Requirements ... 277
Simple OCx/PWM Mode Requirements ... 277
SPIx Master Mode (CKE = 0) Requirements ... 278
SPIx Master Mode (CKE = 1) Requirements ... 279
SPIx Slave Mode (CKE = 1) Requirements ... 281
SPIx Slave Mode Requirements (CKE = 0) ... 280
Timing Specifications (50 MHz)
SPIx Master Mode (CKE = 0) Requirements ... 304
SPIx Master Mode (CKE = 1) Requirements ... 304
SPIx Slave Mode (CKE = 1) Requirements ... 305
SPIx Slave Mode Requirements (CKE = 0) ... 305

U

UART ... 181
USB On-The-Go (OTG) ... 103

V

VCAP pin ... 250
Voltage Regulator (On-Chip) ... 250

W

WWW Address ... 341
WWW, On-Line Support ... 16

NOTES:

© 2011-2016 Microchip Technology Inc.

THE MICROCHIP WEB SITE

Microchip provides online support via our WWW site at www.microchip.com. This web site is used as a means to make files and information easily available to customers. Accessible by using your favorite Internet browser, the web site contains the following information:

- **Product Support** – Data sheets and errata, application notes and sample programs, design resources, user's guides and hardware support documents, latest software releases and archived software
- **General Technical Support** – Frequently Asked Questions (FAQ), technical support requests, online discussion groups, Microchip consultant program member listing
- **Business of Microchip** – Product selector and ordering guides, latest Microchip press releases, listing of seminars and events, listings of Microchip sales offices, distributors and factory representatives

CUSTOMER CHANGE NOTIFICATION SERVICE

Microchip's customer notification service helps keep customers current on Microchip products. Subscribers will receive e-mail notification whenever there are changes, updates, revisions or errata related to a specified product family or development tool of interest.

To register, access the Microchip web site at www.microchip.com. Under "Support", click on "Customer Change Notification" and follow the registration instructions.

CUSTOMER SUPPORT

Users of Microchip products can receive assistance through several channels:

- Distributor or Representative
- Local Sales Office
- Field Application Engineer (FAE)
- Technical Support

Customers should contact their distributor, representative or Field Application Engineer (FAE) for support. Local sales offices are also available to help customers. A listing of sales offices and locations is included in the back of this document.

Technical support is available through the web site at: http://microchip.com/support

PRODUCT IDENTIFICATION SYSTEM

To order or obtain information, e.g., on pricing or delivery, refer to the factory or the listed sales office.

PIC32 MX 1XX F 032 D B T - 50 I / PT - XXX

- **Microchip Brand** — PIC32
- **Architecture** — MX
- **Product Groups** — 1XX
- **Flash Memory Family** — F
- **Program Memory Size (KB)** — 032
- **Pin Count** — D
- **Software Targeting** — B
- **Tape and Reel Flag (if applicable)** — T
- **Speed (if applicable)** — 50
- **Temperature Range** — I
- **Package** — PT
- **Pattern** — XXX

Example:

PIC32MX110F032DT-I/PT:
General purpose PIC32,
32-bit RISC MCU with M4K® core,
32 KB program memory, 44-pin,
Industrial temperature,
TQFP package.

Flash Memory Family

Architecture	MX	= M4K® MCU core
Product Groups	1XX	= General purpose microcontroller family
	2XX	= General purpose microcontroller family
Flash Memory Family	F	= Flash program memory
Program Memory Size	016	= 16K
	032	= 32K
	064	= 64K
	128	= 128K
	256	= 256K
Pin Count	B	= 28-pin
	C	= 36-pin
	D	= 44-pin
Software Targeting	B	= Targeted for Bluetooth® Audio Break-in devices
Speed	( )	= 40 MHz – ( ) indicates a blank field; package markings for 40 MHz devices do not include the Speed
	50	= 50 MHz
Temperature Range	I	= -40°C to +85°C (Industrial)
	V	= -40°C to +105°C (V-temp)
Package	ML	= 28-Lead (6x6 mm) QFN (Plastic Quad Flatpack)
	ML	= 44-Lead (8x8 mm) QFN (Plastic Quad Flatpack)
	PT	= 44-Lead (10x10x1 mm) TQFP (Plastic Thin Quad Flatpack)
	SO	= 28-Lead (7.50 mm) SOIC (Plastic Small Outline)
	SP	= 28-Lead (300 mil) SPDIP (Skinny Plastic Dual In-line)
	SS	= 28-Lead (5.30 mm) SSOP (Plastic Shrink Small Outline)
	TL	= 36-Lead (5x5 mm) VTLA (Very Thin Leadless Array)
	TL	= 44-Lead (6x6 mm) VTLA (Very Thin Leadless Array)
Pattern	Three-digit QTP, SQTP, Code or Special Requirements (blank otherwise)	
	ES	= Engineering Sample

Note the following details of the code protection feature on Microchip devices:

- Microchip products meet the specification contained in their particular Microchip Data Sheet.
- Microchip believes that its family of products is one of the most secure families of its kind on the market today, when used in the intended manner and under normal conditions.
- There are dishonest and possibly illegal methods used to breach the code protection feature. All of these methods, to our knowledge, require using the Microchip products in a manner outside the operating specifications contained in Microchip's Data Sheets. Most likely, the person doing so is engaged in theft of intellectual property.
- Microchip is willing to work with the customer who is concerned about the integrity of their code.
- Neither Microchip nor any other semiconductor manufacturer can guarantee the security of their code. Code protection does not mean that we are guaranteeing the product as "unbreakable."

Code protection is constantly evolving. We at Microchip are committed to continuously improving the code protection features of our products. Attempts to break Microchip's code protection feature may be a violation of the Digital Millennium Copyright Act. If such acts allow unauthorized access to your software or other copyrighted work, you may have a right to sue for relief under that Act.

Information contained in this publication regarding device applications and the like is provided only for your convenience and may be superseded by updates. It is your responsibility to ensure that your application meets with your specifications. MICROCHIP MAKES NO REPRESENTATIONS OR WARRANTIES OF ANY KIND WHETHER EXPRESS OR IMPLIED, WRITTEN OR ORAL, STATUTORY OR OTHERWISE, RELATED TO THE INFORMATION, INCLUDING BUT NOT LIMITED TO ITS CONDITION, QUALITY, PERFORMANCE, MERCHANTABILITY OR FITNESS FOR PURPOSE**.** Microchip disclaims all liability arising from this information and its use. Use of Microchip devices in life support and/or safety applications is entirely at the buyer's risk, and the buyer agrees to defend, indemnify and hold harmless Microchip from any and all damages, claims, suits, or expenses resulting from such use. No licenses are conveyed, implicitly or otherwise, under any Microchip intellectual property rights unless otherwise stated.

Microchip received ISO/TS-16949:2009 certification for its worldwide headquarters, design and wafer fabrication facilities in Chandler and Tempe, Arizona; Gresham, Oregon and design centers in California and India. The Company's quality system processes and procedures are for its PIC® MCUs and dsPIC® DSCs, KEELOQ® code hopping devices, Serial EEPROMs, microperipherals, nonvolatile memory and analog products. In addition, Microchip's quality system for the design and manufacture of development systems is ISO 9001:2000 certified.

QUALITY MANAGEMENT SYSTEM
CERTIFIED BY DNV
═ ISO/TS 16949 ═

Trademarks

The Microchip name and logo, the Microchip logo, AnyRate, dsPIC, FlashFlex, flexPWR, Heldo, JukeBlox, KeeLoq, KeeLoq logo, Kleer, LANCheck, LINK MD, MediaLB, MOST, MOST logo, MPLAB, OptoLyzer, PIC, PICSTART, PIC32 logo, RightTouch, SpyNIC, SST, SST Logo, SuperFlash and UNI/O are registered trademarks of Microchip Technology Incorporated in the U.S.A. and other countries.

ClockWorks, The Embedded Control Solutions Company, ETHERSYNCH, Hyper Speed Control, HyperLight Load, IntelliMOS, mTouch, Precision Edge, and QUIET-WIRE are registered trademarks of Microchip Technology Incorporated in the U.S.A.

Analog-for-the-Digital Age, Any Capacitor, AnyIn, AnyOut, BodyCom, chipKIT, chipKIT logo, CodeGuard, dsPICDEM, dsPICDEM.net, Dynamic Average Matching, DAM, ECAN, EtherGREEN, In-Circuit Serial Programming, ICSP, Inter-Chip Connectivity, JitterBlocker, KleerNet, KleerNet logo, MiWi, motorBench, MPASM, MPF, MPLAB Certified logo, MPLIB, MPLINK, MultiTRAK, NetDetach, Omniscient Code Generation, PICDEM, PICDEM.net, PICkit, PICtail, PureSilicon, RightTouch logo, REAL ICE, Ripple Blocker, Serial Quad I/O, SQI, SuperSwitcher, SuperSwitcher II, Total Endurance, TSHARC, USBCheck, VariSense, ViewSpan, WiperLock, Wireless DNA, and ZENA are trademarks of Microchip Technology Incorporated in the U.S.A. and other countries.

SQTP is a service mark of Microchip Technology Incorporated in the U.S.A.

Silicon Storage Technology is a registered trademark of Microchip Technology Inc. in other countries.

GestIC is a registered trademarks of Microchip Technology Germany II GmbH & Co. KG, a subsidiary of Microchip Technology Inc., in other countries.

All other trademarks mentioned herein are property of their respective companies.

© 2011-2016, Microchip Technology Incorporated, Printed in the U.S.A., All Rights Reserved.

ISBN:978-1-5224-0471-2

Worldwide Sales and Service

AMERICAS

Corporate Office
2355 West Chandler Blvd.
Chandler, AZ 85224-6199
Tel: 480-792-7200
Fax: 480-792-7277
Technical Support:
http://www.microchip.com/support
Web Address:
www.microchip.com

Atlanta
Duluth, GA
Tel: 678-957-9614
Fax: 678-957-1455

Austin, TX
Tel: 512-257-3370

Boston
Westborough, MA
Tel: 774-760-0087
Fax: 774-760-0088

Chicago
Itasca, IL
Tel: 630-285-0071
Fax: 630-285-0075

Cleveland
Independence, OH
Tel: 216-447-0464
Fax: 216-447-0643

Dallas
Addison, TX
Tel: 972-818-7423
Fax: 972-818-2924

Detroit
Novi, MI
Tel: 248-848-4000

Houston, TX
Tel: 281-894-5983

Indianapolis
Noblesville, IN
Tel: 317-773-8323
Fax: 317-773-5453

Los Angeles
Mission Viejo, CA
Tel: 949-462-9523
Fax: 949-462-9608

New York, NY
Tel: 631-435-6000

San Jose, CA
Tel: 408-735-9110

Canada - Toronto
Tel: 905-673-0699
Fax: 905-673-6509

ASIA/PACIFIC

Asia Pacific Office
Suites 3707-14, 37th Floor
Tower 6, The Gateway
Harbour City, Kowloon

Hong Kong
Tel: 852-2943-5100
Fax: 852-2401-3431

Australia - Sydney
Tel: 61-2-9868-6733
Fax: 61-2-9868-6755

China - Beijing
Tel: 86-10-8569-7000
Fax: 86-10-8528-2104

China - Chengdu
Tel: 86-28-8665-5511
Fax: 86-28-8665-7889

China - Chongqing
Tel: 86-23-8980-9588
Fax: 86-23-8980-9500

China - Dongguan
Tel: 86-769-8702-9880

China - Hangzhou
Tel: 86-571-8792-8115
Fax: 86-571-8792-8116

China - Hong Kong SAR
Tel: 852-2943-5100
Fax: 852-2401-3431

China - Nanjing
Tel: 86-25-8473-2460
Fax: 86-25-8473-2470

China - Qingdao
Tel: 86-532-8502-7355
Fax: 86-532-8502-7205

China - Shanghai
Tel: 86-21-5407-5533
Fax: 86-21-5407-5066

China - Shenyang
Tel: 86-24-2334-2829
Fax: 86-24-2334-2393

China - Shenzhen
Tel: 86-755-8864-2200
Fax: 86-755-8203-1760

China - Wuhan
Tel: 86-27-5980-5300
Fax: 86-27-5980-5118

China - Xian
Tel: 86-29-8833-7252
Fax: 86-29-8833-7256

ASIA/PACIFIC

China - Xiamen
Tel: 86-592-2388138
Fax: 86-592-2388130

China - Zhuhai
Tel: 86-756-3210040
Fax: 86-756-3210049

India - Bangalore
Tel: 91-80-3090-4444
Fax: 91-80-3090-4123

India - New Delhi
Tel: 91-11-4160-8631
Fax: 91-11-4160-8632

India - Pune
Tel: 91-20-3019-1500

Japan - Osaka
Tel: 81-6-6152-7160
Fax: 81-6-6152-9310

Japan - Tokyo
Tel: 81-3-6880- 3770
Fax: 81-3-6880-3771

Korea - Daegu
Tel: 82-53-744-4301
Fax: 82-53-744-4302

Korea - Seoul
Tel: 82-2-554-7200
Fax: 82-2-558-5932 or
82-2-558-5934

Malaysia - Kuala Lumpur
Tel: 60-3-6201-9857
Fax: 60-3-6201-9859

Malaysia - Penang
Tel: 60-4-227-8870
Fax: 60-4-227-4068

Philippines - Manila
Tel: 63-2-634-9065
Fax: 63-2-634-9069

Singapore
Tel: 65-6334-8870
Fax: 65-6334-8850

Taiwan - Hsin Chu
Tel: 886-3-5778-366
Fax: 886-3-5770-955

Taiwan - Kaohsiung
Tel: 886-7-213-7828

Taiwan - Taipei
Tel: 886-2-2508-8600
Fax: 886-2-2508-0102

Thailand - Bangkok
Tel: 66-2-694-1351
Fax: 66-2-694-1350

EUROPE

Austria - Wels
Tel: 43-7242-2244-39
Fax: 43-7242-2244-393

Denmark - Copenhagen
Tel: 45-4450-2828
Fax: 45-4485-2829

France - Paris
Tel: 33-1-69-53-63-20
Fax: 33-1-69-30-90-79

Germany - Dusseldorf
Tel: 49-2129-3766400

Germany - Karlsruhe
Tel: 49-721-625370

Germany - Munich
Tel: 49-89-627-144-0
Fax: 49-89-627-144-44

Italy - Milan
Tel: 39-0331-742611
Fax: 39-0331-466781

Italy - Venice
Tel: 39-049-7625286

Netherlands - Drunen
Tel: 31-416-690399
Fax: 31-416-690340

Poland - Warsaw
Tel: 48-22-3325737

Spain - Madrid
Tel: 34-91-708-08-90
Fax: 34-91-708-08-91

Sweden - Stockholm
Tel: 46-8-5090-4654

UK - Wokingham
Tel: 44-118-921-5800
Fax: 44-118-921-5820

07/14/15

© 2011-2016 Microchip Technology Inc.

Mouser Electronics

Authorized Distributor

Click to View Pricing, Inventory, Delivery & Lifecycle Information:

Microchip:

PIC32MX110F016B-I/ML PIC32MX110F016B-I/SO PIC32MX110F016B-I/SS PIC32MX110F016D-I/ML PIC32MX110F016D-I/PT PIC32MX110F016D-I/TL PIC32MX120F032B-I/ML PIC32MX120F032B-I/SO PIC32MX120F032B-I/SS PIC32MX120F032D-I/ML PIC32MX120F032D-I/PT PIC32MX120F032D-I/TL PIC32MX210F016B-I/ML PIC32MX210F016B-I/SO PIC32MX210F016B-I/SS PIC32MX210F016D-I/ML PIC32MX210F016D-I/PT PIC32MX210F016D-I/TL PIC32MX220F032B-I/ML PIC32MX220F032B-I/SO PIC32MX220F032B-I/SS PIC32MX220F032D-I/ML PIC32MX220F032D-I/PT PIC32MX220F032D-I/TL PIC32MX110F016B-V/ML PIC32MX110F016B-V/SO PIC32MX110F016B-V/SS PIC32MX110F016D-V/ML PIC32MX110F016D-V/PT PIC32MX110F016D-V/TL PIC32MX120F032B-V/ML PIC32MX120F032B-V/SO PIC32MX120F032B-V/SS PIC32MX120F032D-V/ML PIC32MX120F032D-V/PT PIC32MX120F032D-V/TL PIC32MX210F016B-V/ML PIC32MX210F016B-V/SO PIC32MX210F016B-V/SS PIC32MX210F016D-V/ML PIC32MX210F016D-V/PT PIC32MX210F016D-V/TL PIC32MX220F032B-V/ML PIC32MX220F032B-V/SO PIC32MX220F032B-V/SS PIC32MX220F032D-V/ML PIC32MX220F032D-V/PT PIC32MX220F032D-V/TL PIC32MX110F016DT-V/TL PIC32MX120F032BT-V/SO PIC32MX210F016BT-V/SO PIC32MX110F016BT-V/ML PIC32MX120F032DT-V/TL PIC32MX210F016BT-V/SS PIC32MX110F016BT-V/SS PIC32MX120F032B-V/SP PIC32MX110F016C-I/TL PIC32MX110F016C-V/TL PIC32MX120F032DT-V/ML PIC32MX210F016B-V/SP PIC32MX220F032BT-V/SO PIC32MX220F032BT-V/SS PIC32MX220F032BT-V/ML PIC32MX120F032BT-V/ML PIC32MX210F016BT-I/ML PIC32MX210F016DT-V/ML PIC32MX210F016DT-V/PT PIC32MX220F032DT-V/PT PIC32MX120F032DT-V/PT PIC32MX120F032CT-V/TL PIC32MX120F032C-V/TL PIC32MX220F032C-V/TL PIC32MX210F016DT-V/TL PIC32MX120F032C-I/TL PIC32MX220F032DT-V/TL PIC32MX210F016BT-V/ML PIC32MX120F032BT-I/ML PIC32MX110F016BT-V/SO PIC32MX110F016B-V/SP PIC32MX110F016BT-I/ML PIC32MX210F016CT-V/TL PIC32MX210F016C-I/TL PIC32MX220F032B-V/SP PIC32MX220F032CT-V/TL PIC32MX220F032BT-I/ML PIC32MX110F016DT-V/ML PIC32MX120F032BT-V/SS PIC32MX110F016CT-V/TL PIC32MX220F032C-I/TL PIC32MX220F032DT-V/ML PIC32MX110F016DT-V/PT PIC32MX210F016C-V/TL PIC32MX110F016B-I/SP PIC32MX110F016BT-I/SO PIC32MX110F016BT-I/SS PIC32MX110F016CT-I/TL PIC32MX110F016DT-I/ML PIC32MX110F016DT-I/PT PIC32MX110F016DT-I/TL PIC32MX120F032B-I/SP

Общество с ограниченной ответственностью «МосЧип» ИНН 7719860671 / КПП 771901001
Адрес: 105318, г.Москва, ул.Щербаковская д.3, офис 1107

Данный компонент на территории Российской Федерации

Вы можете приобрести в компании MosChip.

Для оперативного оформления запроса Вам необходимо перейти по данной ссылке:

http://moschip.ru/get-element

Вы можете разместить у нас заказ для любого Вашего проекта, будь то серийное производство или разработка единичного прибора.

В нашем ассортименте представлены ведущие мировые производители активных и пассивных электронных компонентов.

Нашей специализацией является поставка электронной компонентной базы двойного назначения, продукции таких производителей как XILINX, Intel (ex.ALTERA), Vicor, Microchip, Texas Instruments, Analog Devices, Mini-Circuits, Amphenol, Glenair.

Сотрудничество с глобальными дистрибьюторами электронных компонентов, предоставляет возможность заказывать и получать с международных складов практически любой перечень компонентов в оптимальные для Вас сроки.

На всех этапах разработки и производства наши партнеры могут получить квалифицированную поддержку опытных инженеров.

Система менеджмента качества компании отвечает требованиям в соответствии с ГОСТ Р ИСО 9001, ГОСТ РВ 0015-002 и ЭС РД 009

Офис по работе с юридическими лицами:

105318, г.Москва, ул.Щербаковская д.3, офис 1107, 1118, ДЦ «Щербаковский»

Телефон: +7 495 668-12-70 (многоканальный)

Факс: +7 495 668-12-70 (доб.304)

E-mail: info@moschip.ru

Skype отдела продаж:
moschip.ru
moschip.ru_4
moschip.ru_6
moschip.ru_9