bq3285ED/LD

Real-Time Clock (RTC)

Features

- ACPI-compliant day-of-month alarm
- Direct clock/calendar replacement for IBM® AT-compatible computers and other applications
- 2.7–5.5V operation (bq3285LD); 4.5–5.5V operation (bq3285ED)
- 242 bytes of general nonvolatile storage
- Dedicated 32.768kHz output pin
- System wake-up capability—alarm interrupt output active in battery-backup mode
- Less than 0.55µA load under battery operation
- Selectable Intel or Motorola bus timing
- 24-pin plastic SSOP

General Description

The CMOS bq3285ED/LD is a low-power microprocessor peripheral providing a time-of-day clock and 100-year calendar with alarm features and battery operation. The architecture is based on the bq3285/7 RTC with added features: low-voltage operation, 32.768kHz output, 128 additional bytes of CMOS, and a day-of-month alarm to be compliant with the ACPI RTC specification.

A 32.768kHz output is available for sustaining power-management activities. The bq3285ED/LD 32kHz output is always on whenever V_{CC} is valid. In V_{CC} standby mode, the 32kHz is active, and the bq3285LD typically draws 100µA while the bq3285ED typically draws 300µA. Wake-up capability is provided by an alarm interrupt, which is active in battery-backup mode. In battery-backup mode, current drain is less than 550nA.

The bq3285ED/LD write-protects the clock, calendar, and storage registers during power failure. A backup battery then maintains data and operates the clock and calendar.

The bq3285ED/LD is a fully compatible real-time clock for IBM AT-compatible computers and other applications. The only external components are a 32.768kHz crystal and a backup battery.

The bq3285ED is intended for use in 5V systems. The bq3285LD is intended for use in 3V systems; the bq3285LD, however, may also operate at 5V and then go into a 3V power-down state, write-protecting as if in a 3V system.

Pin Connections

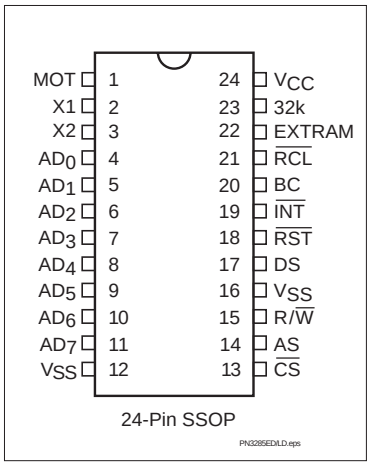

Pin Names

AD_0–AD_7	Multiplexed address/data input/output
MOT	Bus type select input
$\overline{CS}$	Chip select input
AS	Address strobe input
DS	Data strobe input
R/$\overline{W}$	Read/write input
$\overline{INT}$	Interrupt request output
RST	Reset input
32K	32.768kHz output
EXTRAM	Extended RAM enable
RCL	RAM clear input
BC	3V backup cell input
X1–X2	Crystal inputs
V_{CC}	Power supply
V_{SS}	Ground

July 1997

Block Diagram

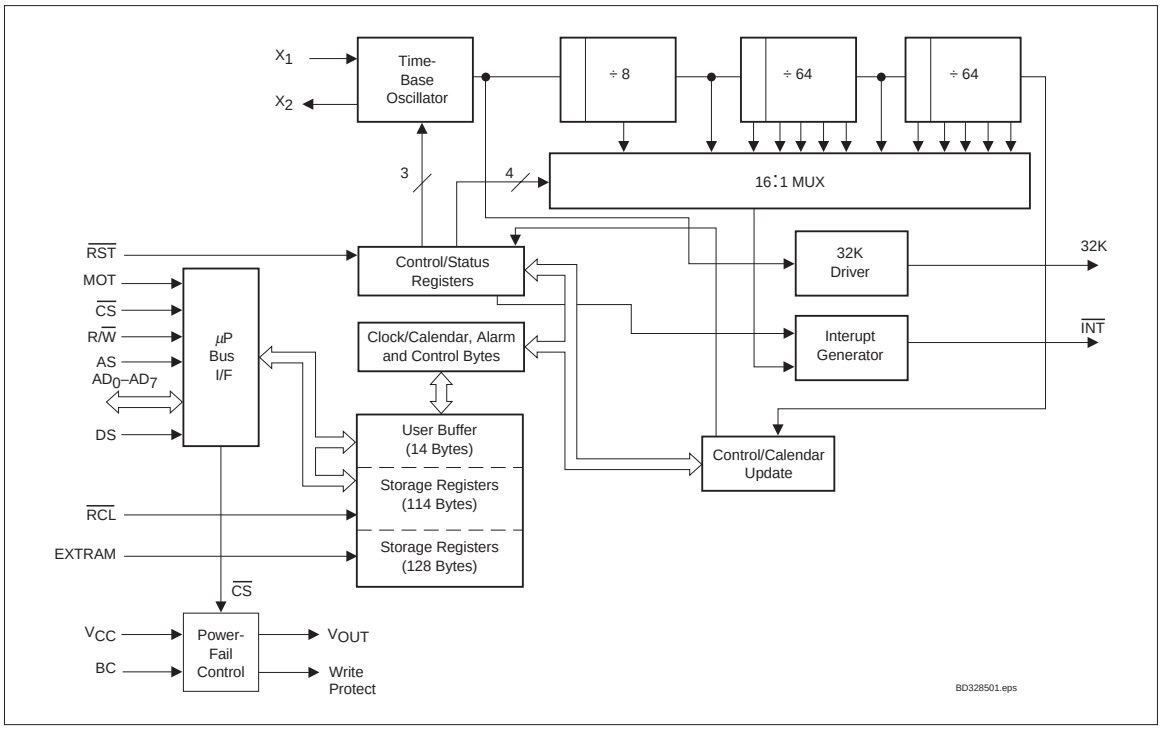

Pin Descriptions

MOT **Bus type select input**

MOT selects bus timing for either Motorola or Intel architecture. This pin should be tied to V_{CC} for Motorola timing or to V_{SS} for Intel timing (see Table 1). The setting should not be changed during system operation. MOT is internally pulled low by a 30K Ω resistor.

Table 1. Bus Setup

Bus Type	MOT Level	DS Equivalent	R/$\overline{W}$ Equivalent	AS Equivalent
Motorola	V_{CC}	DS, E, or Φ2	R/$\overline{W}$	AS
Intel	V_{SS}	$\overline{RD}$, $\overline{MEMR}$, or $\overline{I/OR}$	$\overline{WR}$, $\overline{MEMW}$, or $\overline{I/OW}$	ALE

AD_0–AD_7 **Multiplexed address/data input/output**

The bq3285ED/LD bus cycle consists of two phases: the address phase and the data-transfer phase. The address phase precedes the data-transfer phase. During the address phase, an address placed on AD_0–AD_7 and EXTRAM is latched into the bq3285ED/LD on the falling edge of the AS signal. During the data-transfer phase of the bus cycle, the AD_0–AD_7 pins serve as a bidirectional data bus.

AS **Address strobe input**

AS serves to demultiplex the address/data bus. The falling edge of AS latches the address on AD_0–AD_7 and EXTRAM. This demultiplexing process is independent of the $\overline{CS}$ signal. For DIP and SOIC packages with MOT = V_{SS}, the AS input is provided a signal similar to ALE in an Intel-based system.

DS **Data strobe input**

When MOT = V_{CC}, DS controls data transfer during a bq3285ED/LD bus cycle. During a read cycle, the bq3285ED/LD drives the bus after the rising edge on DS. During a write cycle, the falling edge on DS is used to latch write data into the chip.

When MOT = V_{SS}, the DS input is provided a signal similar to $\overline{RD}$, $\overline{MEMR}$, or $\overline{I/OR}$ in an Intel-based system. The falling edge on DS is used to enable the outputs during a read cycle.

R/$\overline{W}$ **Read/write input**

When MOT = V_{CC}, the level on R/$\overline{W}$ identifies the direction of data transfer. A high level on R/$\overline{W}$ indicates a read bus cycle, whereas a low on this pin indicates a write bus cycle.

When MOT = V_{SS}, R/$\overline{W}$ is provided a signal similar to $\overline{WR}$, $\overline{MEMW}$, or $\overline{I/OW}$ in an Intel-based system. The rising edge on R/$\overline{W}$ latches data into the bq3285ED/LD.

$\overline{CS}$ **Chip select input**

$\overline{CS}$ should be driven low and held stable during the data-transfer phase of a bus cycle accessing the bq3285ED/LD.

$\overline{INT}$ **Interrupt request output**

$\overline{INT}$ is an open-drain output. This allows alarm $\overline{INT}$ to be valid in battery-backup mode. To use this feature, connect $\overline{INT}$ through a resistor to a power supply other than V_{CC}. $\overline{INT}$ is asserted low when any event flag is set and the corresponding event enable bit is also set. $\overline{INT}$ becomes high-impedance whenever register C is read (see the Control/Status Registers section).

32K **32.768 kHz output**

32K provides a buffered 32.768 kHz output. The frequency remains on and fixed at 32.768kHz as long as V_{CC} is valid.

EXTRAM **Extended RAM enable**

Enables 128 bytes of additional nonvolatile SRAM. It is connected internally to a 30kΩ pull-down resistor. To access the RTC registers, EXTRAM must be low.

$\overline{RCL}$ **RAM clear input**

A low level on the $\overline{RCL}$ pin causes the contents of each of the 242 storage bytes to be set to FF(hex). The contents of the clock and control registers are unaffected. This pin should be used as a user-interface input (pushbutton to ground) and not connected to the output of any active component. $\overline{RCL}$ input is only recognized when held low for at least 125ms in the presence of V_{CC}. Using RAM clear does not affect the battery load. This pin is connected internally to a 30kΩ pull-up resistor.

BC **3V backup cell input**

BC should be connected to a 3V backup cell for RTC operation and storage register nonvolatility in the absence of system power. When V_{CC} slews down past V_{BC} (3V typical), the integral control circuitry switches the power source to BC. When V_{CC} returns above V_{BC}, the power source is switched to V_{CC}.

Upon power-up, a voltage within the V_{BC} range must be present on the BC pin for the oscillator to start up.

$\overline{RST}$ **Reset input**

The bq3285ED/LD is reset when $\overline{RST}$ is pulled low. When reset, $\overline{INT}$ becomes high impedance, and the bq3285ED/LD is not accessible. Table 4 in the Control/Status Registers section lists the register bits that are cleared by a reset.

Reset may be disabled by connecting $\overline{RST}$ to V_{CC}. This allows the control bits to retain their states through power-down/power-up cycles.

X1–X2 **Crystal inputs**

The X1–X2 inputs are provided for an external 32.768kHz quartz crystal, Daiwa DT-26 or equivalent, with 6pF load capacitance. A trimming capacitor may be necessary for extremely precise time-base generation.

In the absence of a crystal, a 32.768kHz waveform can be fed into the X1 input.

Functional Description

Address Map

The bq3285ED/LD provides 14 bytes of clock and control/status registers and 242 bytes of general nonvolatile storage. Figure 1 illustrates the address map for the bq3285ED/LD.

Update Period

The update period for the bq3285ED/LD is one second. The bq3285ED/LD updates the contents of the clock and calendar locations during the update cycle at the end of each update period (see Figure 2). The alarm flag bit may also be set during the update cycle.

The bq3285ED/LD copies the local register updates into the user buffer accessed by the host processor. When a 1 is written to the update transfer inhibit bit (UTI) in register B, the user copy of the clock and calendar bytes remains unchanged, while the local copy of the same bytes continues to be updated every second.

The update-in-progress bit (UIP) in register A is set t_{BUC} time before the beginning of an update cycle (see Figure 2). This bit is cleared and the update-complete flag (UF) is set at the end of the update cycle.

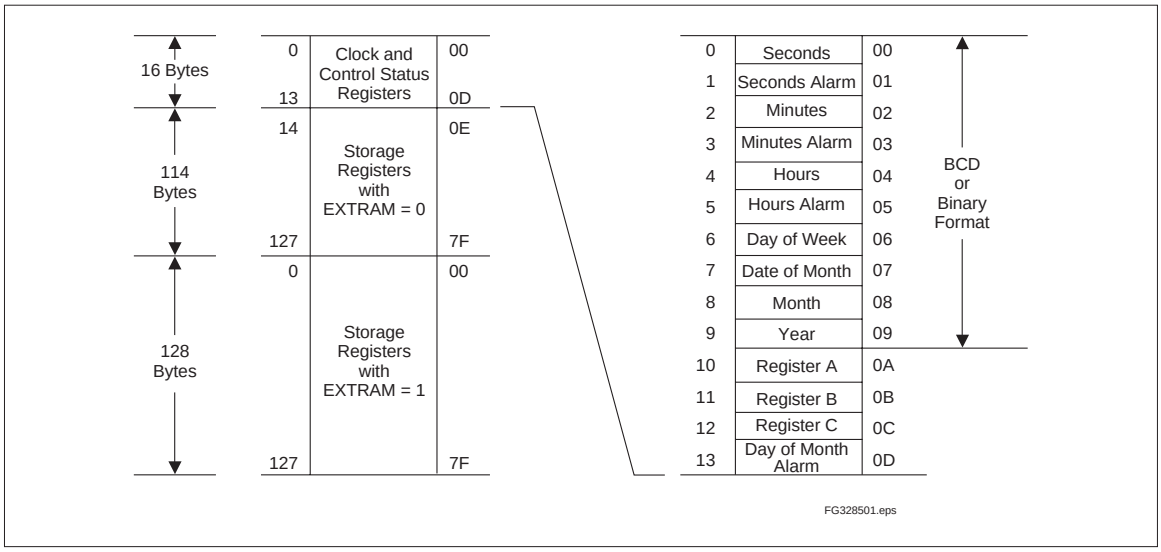

Figure 1. Address Map

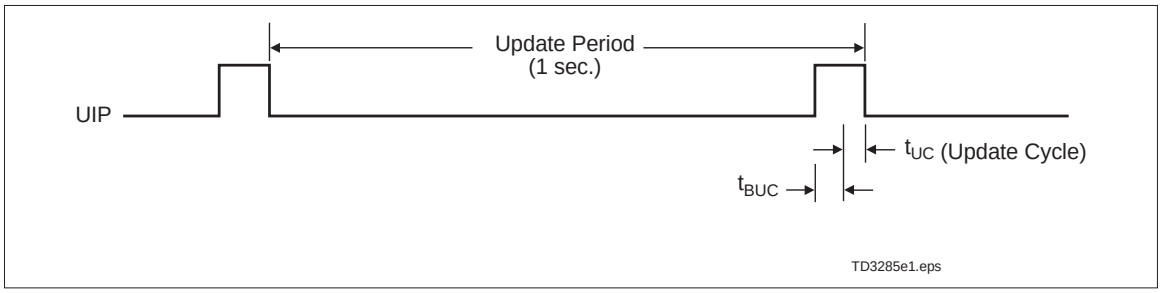

Figure 2. Update Period Timing and UIP

Programming the RTC

The time-of-day, alarm, and calendar bytes can be written in either the BCD or binary format (see Table 2).

These steps may be followed to program the time, alarm, and calendar:

1. Modify the contents of register B:
   a. Write a 1 to the UTI bit to prevent transfers between RTC bytes and user buffer.
   b. Write the appropriate value to the data format (DF) bit to select BCD or binary format for all time, alarm, and calendar bytes.
   c. Write the appropriate value to the hour format (HF) bit.
2. Write new values to all the time, alarm, and calendar locations.
3. Clear the UTI bit to allow update transfers.

On the next update cycle, the RTC updates all 10 bytes in the selected format.

Table 2. Time, Alarm, and Calendar Formats

Address	RTC Bytes	Range		
		Decimal	Binary	Binary-Coded Decimal
0	Seconds	0–59	00H–3BH	00H–59H
1	Seconds alarm	0–59	00H–3BH	00H–59H
2	Minutes	0–59	00H–3BH	00H–59H
3	Minutes alarm	0–59	00H–3BH	00H–59H
4	Hours, 12-hour format	1–12	01H–OCH AM; 81H–8CH PM	01H–12H AM; 81H–92H PM
	Hours, 24-hour format	0–23	00H–17H	00H–23H
5	Hours alarm, 12-hour format	1–12	01H–OCH AM; 81H–8CH PM	01H–12H AM; 81H–92H PM
	Hours alarm, 24-hour format	0–23	00H–17H	00H–23H
6	Day of week (1=Sunday)	1–7	01H–07H	01H–07H
7	Day of month	1–31	01H–1FH	01H–31H
8	Month	1–12	01H–0CH	01H–12H
9	Year	0–99	00H–63H	00H–99H
D	Day of month alarm	1–31	01H-1FH	01–31H

32kHz Output

The bq3285ED/LD provides for a 32.768kHz output, and the output is always active whenever V_{CC} is valid (V_{PFD} + t_{CSR}). The bq3285ED/LD output is not affected by the bit settings in Register A. Time-keeping aspects, however, still require setting OS0-OS2.

Interrupts

The bq3285ED/LD allows three individually selected interrupt events to generate an interrupt request. These three interrupt events are:

- The periodic interrupt, programmable to occur once every 122µs to 500ms.
- The alarm interrupt, programmable to occur once per second to once per day, is active in battery-backup mode, providing a "wake-up" feature.
- The update-ended interrupt, which occurs at the end of each update cycle.

Each of the three interrupt events is enabled by an individual interrupt-enable bit in register B. When an event occurs, its event flag bit in register C is set. If the corresponding event enable bit is also set, then an interrupt request is generated. The interrupt request flag bit (INTF) of register C is set with every interrupt request. Reading register C clears all flag bits, including INTF, and makes $\overline{INT}$ high-impedance.

Two methods can be used to process bq3285ED/LD interrupt events:

- Enable interrupt events and use the interrupt request output to invoke an interrupt service routine.
- Do not enable the interrupts and use a polling routine to periodically check the status of the flag bits.

The individual interrupt sources are described in detail in the following sections.

Table 3. Periodic Interrupt Rate

Register A Bits							Periodic Interrupt	
OSC2	OSC1	OSC0	RS3	RS2	RS1	RS0	Period	Units
0	1	0	0	0	0	0	None	
0	1	0	0	0	0	1	3.90625	ms
0	1	0	0	0	1	0	7.8125	ms
0	1	0	0	0	1	1	122.070	µs
0	1	0	0	1	0	0	244.141	µs
0	1	0	0	1	0	1	488.281	µs
0	1	0	0	1	1	0	976.5625	µs
0	1	0	0	1	1	1	1.95315	ms
0	1	0	1	0	0	0	3.90625	ms
0	1	0	1	0	0	1	7.8125	ms
0	1	0	1	0	1	0	15.625	ms
0	1	0	1	0	1	1	31.25	ms
0	1	0	1	1	0	0	62.5	ms
0	1	0	1	1	0	1	125	ms
0	1	0	1	1	1	0	250	ms
0	1	0	1	1	1	1	500	ms
0	1	1	X	X	X	X	same as above defined by RS3–RS0	

Periodic Interrupt

If the periodic interrupt event is enabled by writing a 1 to the periodic interrupt enable bit (PIE) in register C, an interrupt request is generated once every 122µs to 500ms. The period between interrupts is selected with bits RS3-RS0 in register A (see Table 3).

Alarm Interrupt

The alarm interrupt is active in battery-backup mode, providing a "wake-up" capability. During each update cycle, the RTC compares the day-of-the-month, hours, minutes, and seconds bytes with the four corresponding alarm bytes. If a match of all bytes is found, the alarm interrupt event flag bit, AF in register C, is set to 1. If the alarm event is enabled, an interrupt request is generated.

An alarm byte may be removed from the comparison by setting it to a "don't care" state. The seconds, minutes, and hours alarm bytes are set to a "don't care" state by writing a 1 to each of its two most-significant bits. The day-of-the-month alarm byte is set to a "don't care" state by setting DA5–DA0, in register D, to all zeros. A "don't care" state may be used to select the frequency of alarm interrupt events as follows:

- If none of the four alarm bytes is "don't care," the frequency is once per month, when day-of-the-month, hours, minutes, and seconds match.
- If only the day-of-the-month alarm byte is "don't care", the frequency is once per day, when hours, minutes, and seconds match.
- If only the day-of-the-month and hour alarm byte is "don't care," the frequency is once per hour, when minutes and seconds match.
- If only the day-of-the-month, hour and minute alarm bytes are "don't care," the frequency is once per minute, when seconds match.
- If the day-of-the-month, hour, minute, and second alarm bytes are "don't care," the frequency is once per second.

Update Cycle Interrupt

The update cycle ended flag bit (UF) in register C is set to a 1 at the end of an update cycle. If the update interrupt enable bit (UIE) of register B is 1, and the update transfer inhibit bit (UTI) in register B is 0, then an interrupt request is generated at the end of each update cycle.

Accessing RTC bytes

The EXTRAM pin must be low to access the RTC registers. Time and calendar bytes read during an update cycle may be in error. Three methods to access the time and calendar bytes without ambiguity are:

- Enable the update interrupt event to generate interrupt requests at the end of the update cycle. The interrupt handler has a maximum of 999ms to access the clock bytes before the next update cycle begins (see Figure 3).
- Poll the update-in-progress bit (UIP) in register A. If UIP = 0, the polling routine has a minimum of t_{BUC} time to access the clock bytes (see Figure 3).
- Use the periodic interrupt event to generate interrupt requests every t_{PI} time, such that UIP = 1 always occurs between the periodic interrupts. The interrupt handler has a minimum of $t_{PI}/2 + t_{BUC}$ time to access the clock bytes (see Figure 3).

Oscillator Control

When power is first applied to the bq3285ED/LD and V_{CC} is above V_{PFD}, the internal oscillator and frequency divider are turned on by writing a 010 pattern to bits 4 through 6 of register A. A pattern of 11X turns the oscillator on but keeps the frequency divider disabled. Any

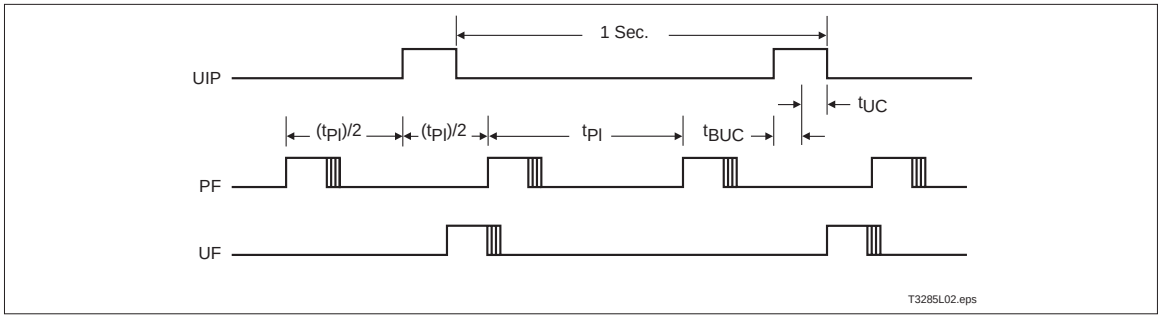

Figure 3. Update-Ended/Periodic Interrupt Relationship

other pattern to these bits keeps the oscillator off. A pattern of 010 must be set for the bq3285ED/LD to keep time in battery backup mode.

Power-Down/Power-Up Cycle

The bq3285ED and bq3285LD power-up/power-down cycles are different. The bq3285LD continuously monitors V_{CC} for out-of-tolerance. During a power failure, when V_{CC} falls below V_{PFD} (2.53V typical), the bq3285LD write-protects the clock and storage registers. The power source is switched to BC when V_{CC} is less than V_{PFD} and BC is greater than V_{PFD}, or when V_{CC} is less than V_{BC} and V_{BC} is less than V_{PFD}. RTC operation and storage data are sustained by a valid backup energy source. When V_{CC} is above V_{PFD}, the power source is V_{CC}. Write-protection continues for t_{CSR} time after V_{CC} rises above V_{PFD}.

The bq3285ED continuously monitors V_{CC} for out-of-tolerance. During a power failure, when V_{CC} falls below V_{PFD} (4.17V typical), the bq3285ED write-protects the clock and storage registers. When V_{CC} is below V_{BC} (3V typical), the power source is switched to BC. RTC operation and storage data are sustained by a valid backup energy source. When V_{CC} is above V_{BC}, the power source is V_{CC}. Write-protection continues for t_{CSR} time after V_{CC} rises above V_{PFD}.

Control/Status Registers

The four control/status registers of the bq3285ED/LD are accessible regardless of the status of the update cycle (see Table 4).

Register A

Register A Bits							
7	6	5	4	3	2	1	0
UIP	OS2	OS1	OS0	RS3	RS2	RS1	RS0

Register A programs:

- The frequency of the periodic event rate.
- Oscillator operation.
- Time-keeping

Register A provides:

- Status of the update cycle.

RS0–RS3 - Frequency Select

7	6	5	4	3	2	1	0
-	-	-	-	RS3	RS2	RS1	RS0

These bits select the periodic interrupt rate, as shown in Table 3.

OS0–OS2 - Oscillator Control

7	6	5	4	3	2	1	0
-	OS2	OS1	OS0	-	-	-	-

These three bits control the state of the oscillator and divider stages. A pattern of 010 or 011 enables RTC operation by turning on the oscillator and enabling the frequency divider. This pattern must be set to turn the oscillator on and to ensure that the bq3285ED/LD keeps time in battery-backup mode. A pattern of 11X turns the oscillator on, but keeps the frequency divider disabled. When 010 is written, the RTC begins its first update after 500ms.

Table 4. Control/Status Registers

Reg.	Loc. (Hex)	Read	Write	Bit Name and State on Reset															
				7 (MSB)		6		5		4		3		2		1		0 (LSB)	
A	0A	Yes	Yes[1]	UIP	na	OS2	na	OS1	na	OS0	na	RS3	na	RS2	na	RS1	na	RS0	na
B	0B	Yes	Yes	UTI	na	PIE	0	AIE	0	UIE	0	-	0	DF	na	HF	na	DSE	na
C	0C	Yes	No	INTF	0	PF	0	AF	0	UF	0	-	0	-	na	-	0	-	0
D	0D	Yes	Yes[2]	VRT	na	-	0	DA5	na	DA4	na	DA3	na	DA2	na	DA1	na	DA0	na

Notes: na = not affected.

1. Except bit 7.
2. Except bits 6 and 7.

UIP - Update Cycle Status

7	6	5	4	3	2	1	0
UIP	-	-	-	-	-	-	-

This read-only bit is set prior to the update cycle. When UIP equals 1, an RTC update cycle may be in progress. UIP is cleared at the end of each update cycle. This bit is also cleared when the update transfer inhibit (UTI) bit in register B is 1.

Register B

Register B Bits							
7	6	5	4	3	2	1	0
UTI	PIE	AIE	UIE	-	DF	HF	DSE

Register B enables:

- Update cycle transfer operation
- Interrupt events
- Daylight saving adjustment

Register B selects:

- Clock and calendar data formats

All bits of register B are read/write.

Bit 3 - Unused Bit.

DSE - Daylight Saving Enable

7	6	5	4	3	2	1	0
-	-	-	-	-	-	-	DSE

This bit enables daylight-saving time adjustments when written to 1:

- On the last Sunday in October, the first time the bq3285ED/LD increments past 1:59:59 AM, the time falls back to 1:00:00 AM.
- On the first Sunday in April, the time springs forward from 2:00:00 AM to 3:00:00 AM.

HF - Hour Format

7	6	5	4	3	2	1	0
-	-	-	-	-	-	HF	-

This bit selects the time-of-day and alarm hour format:

1 = 24-hour format

0 = 12-hour format

DF - Data Format

7	6	5	4	3	2	1	0
-	-	-	-	-	DF	-	-

This bit selects the numeric format in which the time, alarm, and calendar bytes are represented:

1 = Binary

0 = BCD

UIE - Update Cycle Interrupt Enable

7	6	5	4	3	2	1	0
-	-	-	UIE	-	-	-	-

This bit enables an interrupt request due to an update ended interrupt event:

1 = Enabled

0 = Disabled

The UIE bit is automatically cleared when the UTI bit equals 1.

AIE - Alarm Interrupt Enable

7	6	5	4	3	2	1	0
-	-	AIE	-	-	-	-	-

This bit enables an interrupt request due to an alarm interrupt event:

1 = Enabled

0 = Disabled

PIE - Periodic Interrupt Enable

7	6	5	4	3	2	1	0
-	PIE	-	-	-	-	-	-

This bit enables an interrupt request due to a periodic interrupt event:

1 = Enabled

0 = Disabled

UTI - Update Transfer Inhibit

7	6	5	4	3	2	1	0
UTI	-	-	-	-	-	-	-

This bit inhibits the transfer of RTC bytes to the user buffer:

1 = Inhibits transfer and clears UIE

0 = Allows transfer

Register C

Register C Bits							
7	6	5	4	3	2	1	0
INTF	PF	AF	UF	0	-	0	0

Register C is the read-only event status register.

Bits 0, 1, 2, 3 - Unused Bits

7	6	5	4	3	2	1	0
-	-	-	-	0	-	0	0

These bits are always set to 0.

UF - Update Event Flag

7	6	5	4	3	2	1	0
-	-	-	UF	-	-	-	-

This bit is set to a 1 at the end of the update cycle. Reading register C clears this bit.

AF - Alarm Event Flag

7	6	5	4	3	2	1	0
-	-	AF	-	-	-	-	-

This bit is set to a 1 when an alarm event occurs. Reading register C clears this bit.

PF - Periodic Event Flag

7	6	5	4	3	2	1	0
-	PF	-	-	-	-	-	-

This bit is set to a 1 every t_{PI} time, where t_{PI} is the time period selected by the settings of RS0–RS3 in register A. Reading register C clears this bit.

INTF - Interrupt Request Flag

7	6	5	4	3	2	1	0
INTF	-	-	-	-	-	-	-

This flag is set to a 1 when any of the following is true:

AIE = 1 and AF = 1

PIE = 1 and PF = 1

UIE = 1 and UF = 1

Reading register C clears this bit.

Register D

Register D Bits							
7	6	5	4	3	2	1	0
VRT	0	DA5	DA4	DA3	DA2	DA1	DA0

Register D provides for the read-only data integrity status bit, and the day-of-the-month alarm.

Bits 6 - Unused Bit

7	6	5	4	3	2	1	0
-	0	-	-	-	-	-	-

This bit is always set to 0.

VRT - Valid RAM and Time

7	6	5	4	3	2	1	0
VRT	-	-	-	-	-	-	-

1 = Valid backup energy source

0 = Backup energy source is depleted

When the backup energy source is depleted (VRT = 0), data integrity of the RTC and storage registers is not guaranteed.

DA0–DA5

7	6	5	4	3	2	1	0
-	-	DA5	DA4	DA3	DA2	DA1	DA0-

These bits store the value for the day-of-the-month alarm. If DA0–DA5 are set to zero, then the day-of-the-month alarm is disabled . These bits are not affected by a reset.

Absolute Maximum Ratings—bq3285ED

Symbol	Parameter	Value	Unit	Conditions
V_{CC}	DC voltage applied on V_{CC} relative to V_{SS}	-0.3 to 7.0	V	
V_T	DC voltage applied on any pin excluding V_{CC} relative to V_{SS}	-0.3 to 7.0	V	$V_T \leq V_{CC} + 0.3$
T_{OPR}	Operating temperature	0 to +70	°C	Commercial
T_{STG}	Storage temperature	-55 to +125	°C	
T_{BIAS}	Temperature under bias	-40 to +85	°C	
T_{SOLDER}	Soldering temperature	260	°C	For 10 seconds

Note: Permanent device damage may occur if **Absolute Maximum Ratings** are exceeded. Functional operation should be limited to the Recommended DC Operating Conditions detailed in this data sheet. Exposure to conditions beyond the operational limits for extended periods of time may affect device reliability.

Absolute Maximum Ratings—bq3285LD

Symbol	Parameter	Value	Unit	Conditions
V_{CC}	DC voltage applied on V_{CC} relative to V_{SS}	-0.3 to 7.0	V	
V_T	DC voltage applied on any pin excluding V_{CC} relative to V_{SS}	-0.3 to 7.0	V	$V_T \leq V_{CC} + 0.3$
T_{OPR}	Operating temperature	0 to +70	°C	Commercial
T_{STG}	Storage temperature	-55 to +125	°C	
T_{BIAS}	Temperature under bias	-40 to +85	°C	
T_{SOLDER}	Soldering temperature	260	°C	For 10 seconds

Note: Permanent device damage may occur if **Absolute Maximum Ratings** are exceeded. Functional operation should be limited to the Recommended DC Operating Conditions detailed in this data sheet. Exposure to conditions beyond the operational limits for extended periods of time may affect device reliability.

Recommended DC Operating Conditions—bq3285ED ($T_A = T_{OPR}$)

Symbol	Parameter	Minimum	Typical	Maximum	Unit
V_{CC}	Supply voltage	4.5	5.0	5.5	V
V_{SS}	Supply voltage	0	0	0	V
V_{IL}	Input low voltage	-0.3	-	0.8	V
V_{IH}	Input high voltage	2.2	-	V_{CC} + 0.3	V
V_{BC}	Backup cell voltage	2.4	-	4.0	V

Note: Typical values indicate operation at T_A = 25°C.

Recommended DC Operating Conditions—bq3285LD ($T_A = T_{OPR}$)

Symbol	Parameter	Minimum	Typical	Maximum	Unit
V_{CC}	Supply voltage	2.7	3.0	5.5	V
V_{SS}	Supply voltage	0	0	0	V
V_{IL}	Input low voltage	-0.3	-	0.6	V
V_{IH}	Input high voltage	2.2	-	V_{CC} + 0.3	V
V_{BC}	Backup cell voltage	2.4	-	4.0	V

Note: Typical values indicate operation at T_A = 25°C.

Crystal Specifications—bq3285ED/LD (DT-26 or Equivalent)

Symbol	Parameter	Minimum	Typical	Maximum	Unit
f_O	Oscillation frequency	-	32.768	-	kHz
C_L	Load capacitance	-	6	-	pF
T_P	Temperature turnover point	20	25	30	°C
k	Parabolic curvature constant	-	-	-0.042	ppm/°C
Q	Quality factor	40,000	70,000	-	
R_1	Series resistance	-	-	45	KΩ
C_0	Shunt capacitance	-	1.1	1.8	pF
C_0/C_1	Capacitance ratio	-	430	600	
D_L	Drive level	-	-	1	µW
$\Delta f/f_O$	Aging (first year at 25°C)	-	1	-	ppm

DC Electrical Characteristics—bq3285ED ($T_A = T_{OPR}$, V_{CC} = 5V)

Symbol	Parameter	Minimum	Typical	Maximum	Unit	Conditions/Notes
I_{LI}	Input leakage current	-	-	± 1	µA	$V_{IN} = V_{SS}$ to V_{CC}
I_{LO}	Output leakage current	-	-	± 1	µA	AD_0–AD_7 and $\overline{INT}$ in high impedance, $V_{OUT} = V_{SS}$ to V_{CC}
V_{OH}	Output high voltage	2.4	-	-	V	I_{OH} = -2.0 mA
V_{OL}	Output low voltage	-	-	0.4	V	I_{OL} = 4.0 mA
I_{CC}	Operating supply current	-	7	15	mA	Min. cycle, duty = 100%, I_{OH} = 0mA, I_{OL} = 0mA
I_{CCSB}	Standby supply current	-	300	-	µA	$V_{IN} = V_{SS}$ or V_{CC}, $\overline{CS} \geq V_{CC}$ - 0.2
V_{SO}	Supply switch-over voltage	-	V_{BC}	-	V	
I_{CCB}	Battery operation current	-	0.4	0.55	µA	V_{BC} = 3V, T_A = 25°C
V_{PFD}	Power-fail-detect voltage	4.0	4.17	4.35	V	
I_{RCL}	Input current when $\overline{RCL} = V_{SS}$.	-	-	185	µA	Internal 30K pull-up
I_{MOTH}	Input current when MOT = V_{CC}	-	-	-185	µA	Internal 30K pull-down
	Input current when MOT = V_{SS}	-	-	0	µA	Internal 30K pull-down
I_{XTRAM}	Input current when EXTRAM = V_{CC}	-	-	-185	µA	Internal 30K pull-down
	Input current when EXTRAM = V_{SS}	-	-	0	µA	Internal 30K pull-down

Note: Typical values indicate operation at T_A = 25°C, V_{CC} = 5V or V_{BC} = 3V.

DC Electrical Characteristics—bq3285LD ($T_A = T_{OPR}$, V_{CC} = 3V)

Symbol	Parameter	Minimum	Typical[1]	Maximum	Unit	Conditions/Notes
I_{LI}	Input leakage current	-	-	± 1	µA	$V_{IN} = V_{SS}$ to V_{CC}
I_{LO}	Output leakage current	-	-	± 1	µA	AD_0–AD_7 and $\overline{INT}$ in high impedance, $V_{OUT} = V_{SS}$ to V_{CC}
V_{OH}	Output high voltage	2.2	-	-	V	I_{OH} = -1.0 mA
V_{OL}	Output low voltage	-	-	0.4	V	I_{OL} = 2.0 mA
I_{CC}	Operating supply current	-	5[2]	9	mA	Min. cycle, duty = 100%, I_{OH} = 0mA, I_{OL} = 0mA
I_{CCSB}	Standby supply current	-	100[3]	-	µA	$V_{IN} = V_{SS}$ or V_{CC}, $\overline{CS} \geq V_{CC}$ - 0.2
V_{SO}	Supply switch-over voltage	-	V_{PFD}	-	V	$V_{BC} > V_{PFD}$
		-	V_{BC}	-	V	$V_{BC} < V_{PFD}$
I_{CCB}	Battery operation current	-	0.4	0.55	µA	V_{BC} = 3V, T_A = 25°C, $V_{CC} < V_{BC}$
V_{PFD}	Power-fail-detect voltage	2.4	2.53	2.65	V	
I_{RCL}	Input current when $\overline{RCL} = V_{SS}$.	-	-	120	µA	Internal 30K pull-up
I_{MOTH}	Input current when MOT = V_{CC}	-	-	-120	µA	Internal 30K pull-down
	Input current when MOT = V_{SS}	-	-	0	µA	Internal 30K pull-down
I_{XTRAM}	Input current when EXTRAM = V_{CC}	-	-	-120	µA	Internal 30K pull-down
	Input current when EXTRAM = V_{SS}	-	-	0	µA	Internal 30K pull-down

Notes:
1. Typical values indicate operation at T_A = 25°C, V_{CC} = 3V.
2. 7mA at V_{CC} = 5V
3. 300µA at V_{CC} = 5V

Capacitance—bq3285ED/LD (T_A = 25°C, F = 1MHz, V_{CC} = 5.0V)

Symbol	Parameter	Minimum	Typical	Maximum	Unit	Conditions
$C_{I/O}$	Input/output capacitance	-	-	7	pF	V_{OUT} = 0V
C_{IN}	Input capacitance	-	-	5	pF	V_{IN} = 0V

Note: This parameter is sampled and not 100% tested. It does not include the X1 or X2 pin.

AC Test Conditions—bq3285ED

Parameter	Test Conditions
Input pulse levels	0 to 3.0 V
Input rise and fall times	5 ns
Input and output timing reference levels	1.5 V (unless otherwise specified)
Output load (including scope and jig)	See Figures 4 and 5

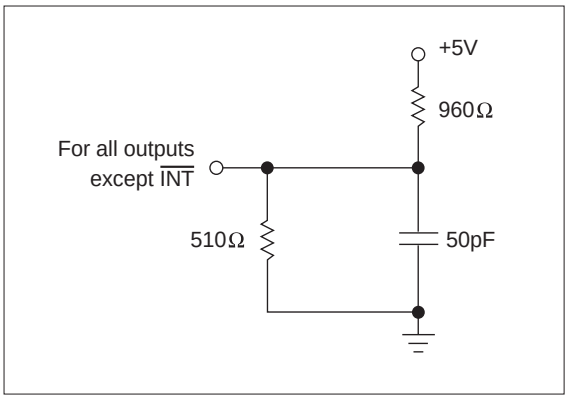

Figure 4. Output Load—bq3285ED

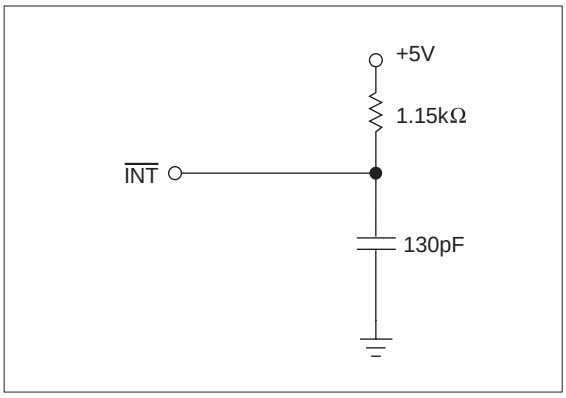

Figure 5. Output Load—bq3285ED

AC Test Conditions—bq3285LD

Parameter	Test Conditions
Input pulse levels	0 to 2.3 V, V_{CC} = 3V[1]
Input rise and fall times	5 ns
Input and output timing reference levels	1.2 V (unless otherwise specified)
Output load (including scope and jig)	See Figures 6 and 7

Note: 1. For 5V timing, please refer to bq3285ED.

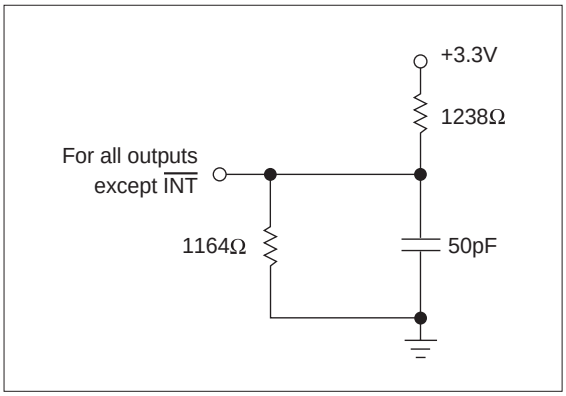

Figure 6. Output Load—bq3285LD

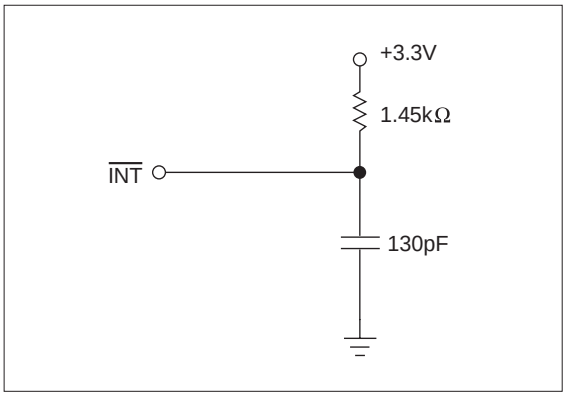

Figure 7. Output Load B—bq3285LD

Read/Write Timing—bq3285ED ($T_A = T_{OPR}$, V_{CC} = 5V)

Symbol	Parameter	Minimum	Typical	Maximum	Unit	Notes
t_{CYC}	Cycle time	160	-	-	ns	
t_{DSL}	DS low or $\overline{RD}/\overline{WR}$ high time	80	-	-	ns	
t_{DSH}	DS high or $\overline{RD}/\overline{WR}$ low time	55	-	-	ns	
t_{RWH}	R/$\overline{W}$ hold time	0	-	-	ns	
t_{RWS}	R/$\overline{W}$ setup time	10	-	-	ns	
t_{CS}	Chip select setup time	5	-	-	ns	
t_{CH}	Chip select hold time	0	-	-	ns	
t_{DHR}	Read data hold time	0	-	25	ns	
t_{DHW}	Write data hold time	0	-	-	ns	
t_{AS}	Address setup time	20	-	-	ns	
t_{AH}	Address hold time	5	-	-	ns	
t_{DAS}	Delay time, DS to AS rise	10	-	-	ns	
t_{ASW}	Pulse width, AS high	30	-	-	ns	
t_{ASD}	Delay time, AS to DS rise ($\overline{RD}/\overline{WR}$ fall)	35	-	-	ns	
t_{OD}	Output data delay time from DS rise ($\overline{RD}$ fall)	-	-	50	ns	
t_{DW}	Write data setup time	30	-	-	ns	
t_{BUC}	Delay time before update cycle	-	244	-	µs	
t_{PI}	Periodic interrupt time interval	-	-	-	-	See Table 3
t_{UC}	Time of update cycle	-	1	-	µs	

Read/Write Timing—bq3285LD ($T_A = T_{OPR}$, $V_{CC} = 3V$)

Symbol	Parameter	Minimum	Typical	Maximum	Unit	Notes
t_{CYC}	Cycle time	270	-	-	ns	
t_{DSL}	DS low or $\overline{RD}/\overline{WR}$ high time	135	-	-	ns	
t_{DSH}	DS high or $\overline{RD}/\overline{WR}$ low time	90	-	-	ns	
t_{RWH}	R/$\overline{W}$ hold time	0	-	-	ns	
t_{RWS}	R/$\overline{W}$ setup time	15	-	-	ns	
t_{CS}	Chip select setup time	8	-	-	ns	
t_{CH}	Chip select hold time	0	-	-	ns	
t_{DHR}	Read data hold time	0	-	40	ns	
t_{DHW}	Write data hold time	0	-	-	ns	
t_{AS}	Address setup time	30	-	-	ns	
t_{AH}	Address hold time	15	-	-	ns	
t_{DAS}	Delay time, DS to AS rise	15	-	-	ns	
t_{ASW}	Pulse width, AS high	50	-	-	ns	
t_{ASD}	Delay time, AS to DS rise ($\overline{RD}/\overline{WR}$ fall)	55	-	-	ns	
t_{OD}	Output data delay time from DS rise ($\overline{RD}$ fall)	-	-	100	ns	
t_{DW}	Write data setup time	50	-	-	ns	
t_{BUC}	Delay time before update cycle	-	244	-	µs	
t_{PI}	Periodic interrupt time interval	-	-	-	-	See Table 3
t_{UC}	Time of update cycle	-	1	-	µs	

Motorola Bus Read/Write Timing—bq3285ED/LD

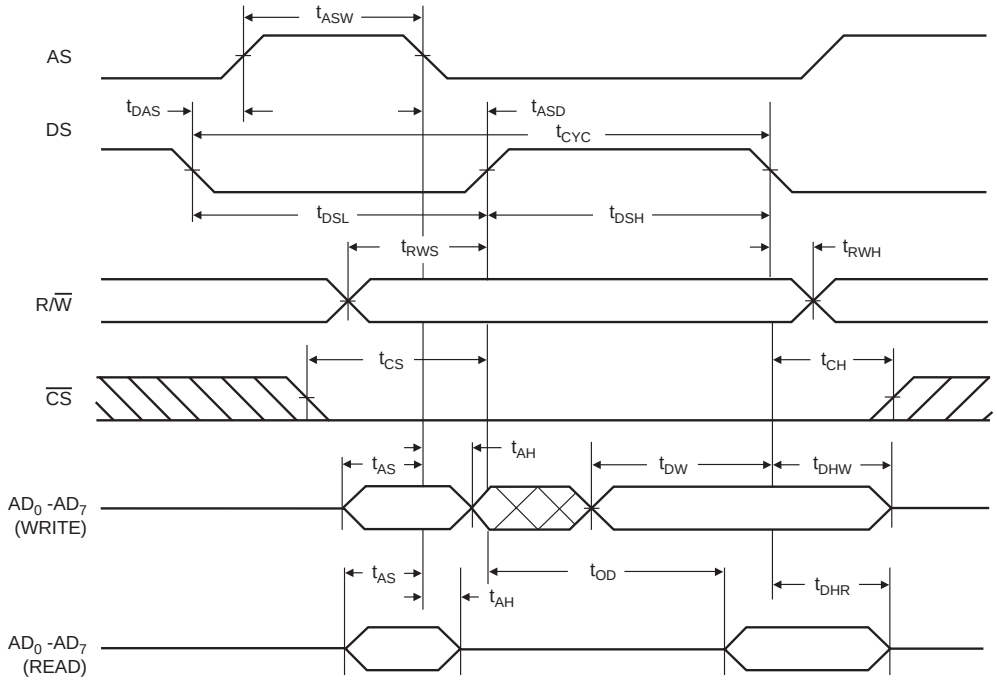

Intel Bus Read Timing—bq3285ED/LD

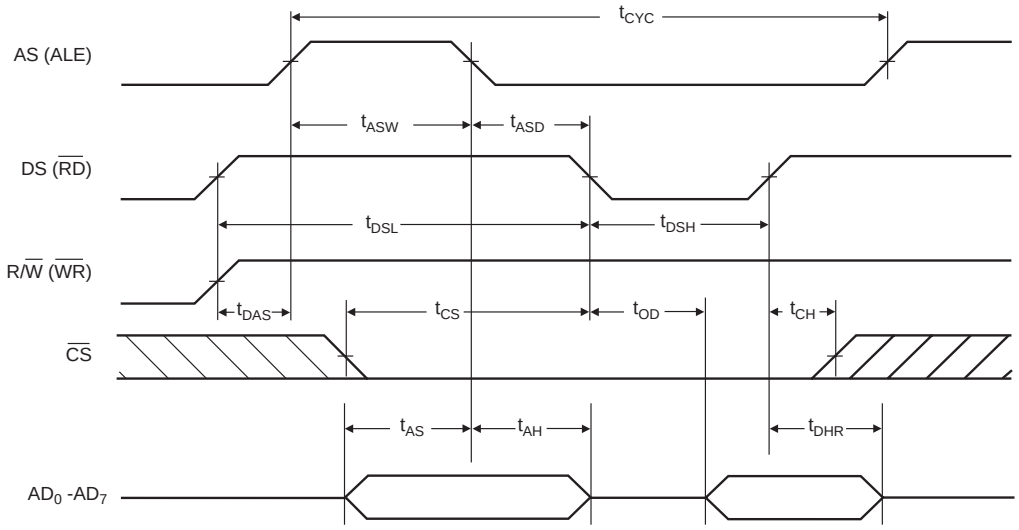

T3285L04.eps

Intel Bus Write Timing—bq3285ED/LD

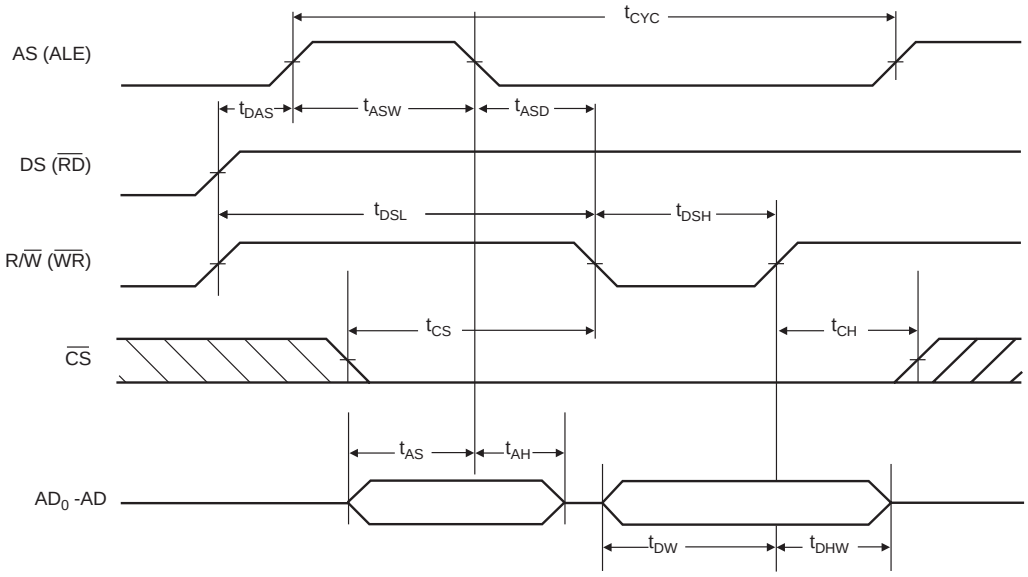

T3285L05.eps

Power-Down/Power-Up Timing—bq3285ED ($T_A = T_{OPR}$)

Symbol	Parameter	Minimum	Typical	Maximum	Unit	Conditions
t_F	V_{CC} slew from 4.5V to 0V	300	-	-	µs	
t_R	V_{CC} slew from 0V to 4.5V	100	-	-	µs	
t_{CSR}	$\overline{CS}$ at V_{IH} after power-up	20	-	200	ms	Internal write-protection period after V_{CC} passes V_{PFD} on power-up.

Caution: Negative undershoots below the absolute maximum rating of -0.3V in battery-backup mode may affect data integrity.

Power-Down/Power-Up Timing—bq3285ED

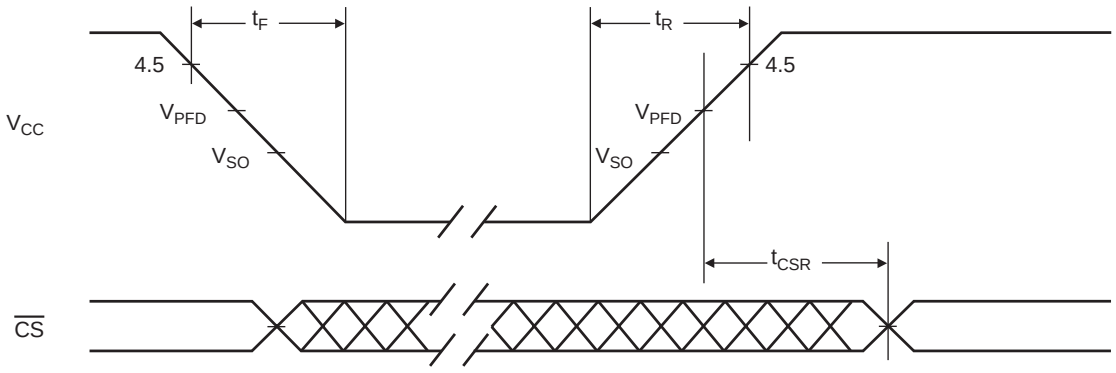

T3285L08.eps

Power-Down/Power-Up Timing—bq3285LD ($T_A = T_{OPR}$)

Symbol	Parameter	Minimum	Typical	Maximum	Unit	Conditions
t_F	V_{CC} slew from 2.7V to 0V	300	-	-	µs	
t_R	V_{CC} slew from 0V to 2.7V	100	-	-	µs	
t_{CSR}	$\overline{CS}$ at V_{IH} after power-up	20	-	200	ms	Internal write-protection period after V_{CC} passes V_{PFD} on power-up.

Caution: Negative undershoots below the absolute maximum rating of -0.3V in battery-backup mode may affect data integrity.

Power-Down/Power-Up Timing—bq3285LD

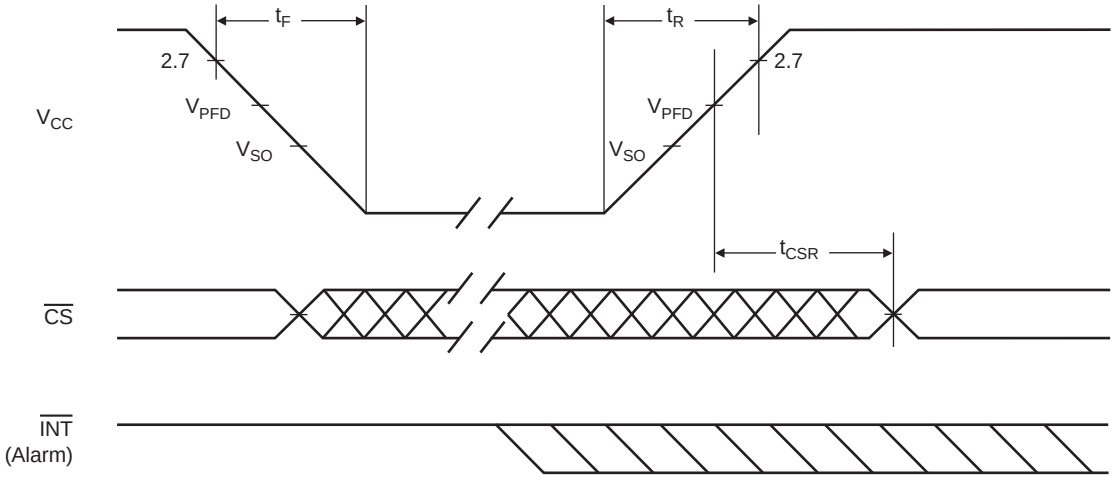

T3285L06.eps

Interrupt Delay Timing—bq3285ED/LD ($T_A = T_{OPR}$)

Symbol	Parameter	Minimum	Typical	Maximum	Unit
t_{RSW}	Reset pulse width	5	-	-	µs
t_{IRR}	$\overline{INT}$ release from $\overline{RST}$	-	-	2	µs
t_{IRD}	$\overline{INT}$ release from DS	-	-	2	µs

Interrupt Delay Timing—bq3285ED/LD

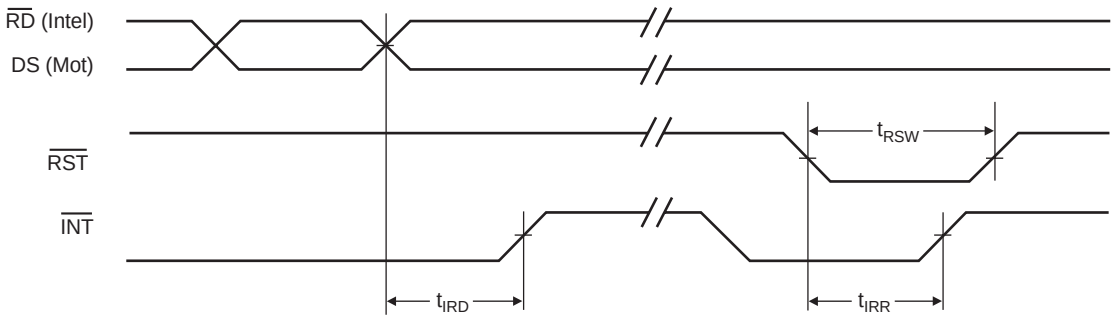

T3285L07.eps

24-Pin SSOP (SS)

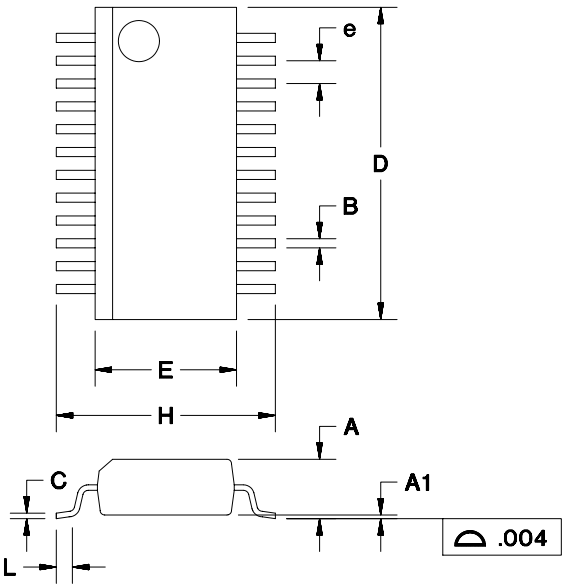

24-Pin SS (0.150" SSOP)

Dimension	Inches		Millimeters	
	Min.	Max.	Min.	Max.
A	0.061	0.068	1.55	1.73
A1	0.004	0.010	0.10	0.25
B	0.008	0.012	0.20	0.30
C	0.007	0.010	0.18	0.25
D	0.337	0.344	8.56	8.74
E	0.150	0.157	3.81	3.99
e	.025 BSC		0.64 BSC	
H	0.230	0.244	5.84	6.20
L	0.016	0.035	0.41	0.89

Ordering Information

bq3285ED/LD **-**

Temperature:
blank = Commercial (0 to +70°C)

Package Option:
SS= 24-pin SSOP (0.150)

Device:
bq3285ED Real-Time Clock with 242 bytes of general storage
or
bq3285LD Real-Time Clock with 242 bytes of general storage (3V operation)

PACKAGING INFORMATION

Orderable Device	Status [1]	Package Type	Package Drawing	Pins	Package Qty	Eco Plan [2]	Lead/Ball Finish	MSL Peak Temp [3]
BQ3285EDSS	OBSOLETE	SSOP	DB	24		TBD	Call TI	Call TI
BQ3285EDSSTR	OBSOLETE	SSOP	DB	24		TBD	Call TI	Call TI
BQ3285LDSS	ACTIVE	SSOP/ QSOP	DBQ	24	50	Green (RoHS & no Sb/Br)	CU NIPDAU	Level-2-260C-1 YEAR
BQ3285LDSSTR	ACTIVE	SSOP/ QSOP	DBQ	24	2500	Green (RoHS & no Sb/Br)	CU NIPDAU	Level-2-260C-1 YEAR

[1] The marketing status values are defined as follows:
ACTIVE: Product device recommended for new designs.
LIFEBUY: TI has announced that the device will be discontinued, and a lifetime-buy period is in effect.
NRND: Not recommended for new designs. Device is in production to support existing customers, but TI does not recommend using this part in a new design.
PREVIEW: Device has been announced but is not in production. Samples may or may not be available.
OBSOLETE: TI has discontinued the production of the device.

[2] Eco Plan - The planned eco-friendly classification: Pb-Free (RoHS) or Green (RoHS & no Sb/Br) - please check http://www.ti.com/productcontent for the latest availability information and additional product content details.
TBD: The Pb-Free/Green conversion plan has not been defined.
Pb-Free (RoHS): TI's terms "Lead-Free" or "Pb-Free" mean semiconductor products that are compatible with the current RoHS requirements for all 6 substances, including the requirement that lead not exceed 0.1% by weight in homogeneous materials. Where designed to be soldered at high temperatures, TI Pb-Free products are suitable for use in specified lead-free processes.
Green (RoHS & no Sb/Br): TI defines "Green" to mean Pb-Free (RoHS compatible), and free of Bromine (Br) and Antimony (Sb) based flame retardants (Br or Sb do not exceed 0.1% by weight in homogeneous material)

[3] MSL, Peak Temp. -- The Moisture Sensitivity Level rating according to the JEDEC industry standard classifications, and peak solder temperature.

Important Information and Disclaimer: The information provided on this page represents TI's knowledge and belief as of the date that it is provided. TI bases its knowledge and belief on information provided by third parties, and makes no representation or warranty as to the accuracy of such information. Efforts are underway to better integrate information from third parties. TI has taken and continues to take reasonable steps to provide representative and accurate information but may not have conducted destructive testing or chemical analysis on incoming materials and chemicals. TI and TI suppliers consider certain information to be proprietary, and thus CAS numbers and other limited information may not be available for release.

In no event shall TI's liability arising out of such information exceed the total purchase price of the TI part(s) at issue in this document sold by TI to Customer on an annual basis.

IMPORTANT NOTICE

Texas Instruments Incorporated and its subsidiaries (TI) reserve the right to make corrections, modifications, enhancements, improvements, and other changes to its products and services at any time and to discontinue any product or service without notice. Customers should obtain the latest relevant information before placing orders and should verify that such information is current and complete. All products are sold subject to TI's terms and conditions of sale supplied at the time of order acknowledgment.

TI warrants performance of its hardware products to the specifications applicable at the time of sale in accordance with TI's standard warranty. Testing and other quality control techniques are used to the extent TI deems necessary to support this warranty. Except where mandated by government requirements, testing of all parameters of each product is not necessarily performed.

TI assumes no liability for applications assistance or customer product design. Customers are responsible for their products and applications using TI components. To minimize the risks associated with customer products and applications, customers should provide adequate design and operating safeguards.

TI does not warrant or represent that any license, either express or implied, is granted under any TI patent right, copyright, mask work right, or other TI intellectual property right relating to any combination, machine, or process in which TI products or services are used. Information published by TI regarding third-party products or services does not constitute a license from TI to use such products or services or a warranty or endorsement thereof. Use of such information may require a license from a third party under the patents or other intellectual property of the third party, or a license from TI under the patents or other intellectual property of TI.

Reproduction of information in TI data books or data sheets is permissible only if reproduction is without alteration and is accompanied by all associated warranties, conditions, limitations, and notices. Reproduction of this information with alteration is an unfair and deceptive business practice. TI is not responsible or liable for such altered documentation.

Resale of TI products or services with statements different from or beyond the parameters stated by TI for that product or service voids all express and any implied warranties for the associated TI product or service and is an unfair and deceptive business practice. TI is not responsible or liable for any such statements.

Following are URLs where you can obtain information on other Texas Instruments products and application solutions:

Products		**Applications**	
Amplifiers	amplifier.ti.com	Audio	www.ti.com/audio
Data Converters	dataconverter.ti.com	Automotive	www.ti.com/automotive
DSP	dsp.ti.com	Broadband	www.ti.com/broadband
Interface	interface.ti.com	Digital Control	www.ti.com/digitalcontrol
Logic	logic.ti.com	Military	www.ti.com/military
Power Mgmt	power.ti.com	Optical Networking	www.ti.com/opticalnetwork
Microcontrollers	microcontroller.ti.com	Security	www.ti.com/security
		Telephony	www.ti.com/telephony
		Video & Imaging	www.ti.com/video
		Wireless	www.ti.com/wireless

Mailing Address: Texas Instruments
Post Office Box 655303 Dallas, Texas 75265

Copyright © 2005, Texas Instruments Incorporated

Общество с ограниченной ответственностью «МосЧип» ИНН 7719860671 / КПП 771901001
Адрес: 105318, г.Москва, ул.Щербаковская д.3, офис 1107

Данный компонент на территории Российской Федерации

Вы можете приобрести в компании MosChip.

Для оперативного оформления запроса Вам необходимо перейти по данной ссылке:

http://moschip.ru/get-element

Вы можете разместить у нас заказ для любого Вашего проекта, будь то серийное производство или разработка единичного прибора.

В нашем ассортименте представлены ведущие мировые производители активных и пассивных электронных компонентов.

Нашей специализацией является поставка электронной компонентной базы двойного назначения, продукции таких производителей как XILINX, Intel (ex.ALTERA), Vicor, Microchip, Texas Instruments, Analog Devices, Mini-Circuits, Amphenol, Glenair.

Сотрудничество с глобальными дистрибьюторами электронных компонентов, предоставляет возможность заказывать и получать с международных складов практически любой перечень компонентов в оптимальные для Вас сроки.

На всех этапах разработки и производства наши партнеры могут получить квалифицированную поддержку опытных инженеров.

Система менеджмента качества компании отвечает требованиям в соответствии с ГОСТ Р ИСО 9001, ГОСТ РВ 0015-002 и ЭС РД 009

Офис по работе с юридическими лицами:

105318, г.Москва, ул.Щербаковская д.3, офис 1107, 1118, ДЦ «Щербаковский»

Телефон: +7 495 668-12-70 (многоканальный)

Факс: +7 495 668-12-70 (доб.304)

E-mail: info@moschip.ru

Skype отдела продаж:
moschip.ru
moschip.ru_4
moschip.ru_6
moschip.ru_9