List of "SFV__R-1/2STBE1HLF" customer document

DOCUMENT NO.	LIST
SC-SFV08	SPEC.
JSA 97501	CAT.NO.TABLE FOR 0.5mm CONTACT SPACING CONNECTOR (SFV__R-1/2STB_HLF)
JSA 97502	CONNECTOR USED FOR FPC/FFC WITH 0.5mm CONTACT SPACING (SFV__R-1STB_HLF)
JSA 97503	CONNECTOR USED FOR FPC/FFC WITH 0.5mm CONTACT SPACING (SFV__R-2STB_HLF)
JSA 97504	CAT.NO.TABLE FOR PLASTIC TAPE PACKAGED 0.5mm CONTACT SPACING CONNECTOR (SFV__R-1/2STBE1HLF)
JSA 97505	PLASTIC TAPE PACKAGED 0.5mm CONTACT SPACING CONNECTOR (SFV__R-1STBE1HLF)
JSA 97506	PLASTIC TAPE PACKAGED 0.5mm CONTACT SPACING CONNECTOR (SFV__R-2STBE1HLF)
JSA96019	RECOMMENDED CABLE (FPC) (SFV__R-1/2ST__LF)
JSA97202	RECOMMENDED CABLE (FFC) (SFV__R-1/2ST__)
BJM-SFV101	HANDLING PROCEDURES

mat'l. code				surface ISO 1302 ✓	tolerance ISO 406 ISO 1101	projection	product family 58EF / CODE JP
ltr	ecn no	dr	date	tolerances unless otherwise specified			title 0.5mm SPACING FPC CONNECTOR DOCUMENT LIST (Cat. No. : SFV__R-1/2STBE1HLF)
A	J09-0075	S.W	'09/2/19	angles / linear		mm	
						scale 2/1	
				dr	S. Watanabe	2009-2-19	dwg no JSA 97500 / sheet 1 of 1 / size A4
				engr	S. Watanabe	2009-2-19	
				chr	M. YAMASHITA	2009-2-19	
				appd	S. Nakamura	2009-2-19	type Product Customer Drawing

sheet index	revision	A	Rev. A
	sheet	1	

form: A4

Copyright FCI.

FCIconnect.com

PDM: Rev:A STATUS:Released Printed: Feb 22, 2009

CAT. NO. & DIMENSIONS

NO. OF CONTACTS (n)	CAT. NO.	DIMENSIONS (NOTE2)			
		A ± 0.2	B ± 0.2	C ± 0.1	D ± 0.1
4	SFV4R-1/2STB__HLF	7.5	5.9	1.5	2.7
5	SFV5R-1/2STB__HLF	8.0	6.4	2.0	3.2
6	SFV6R-1/2STB__HLF	8.5	6.9	2.5	3.7
7	SFV7R-1/2STB__HLF	9.0	7.4	3.0	4.2
8	SFV8R-1/2STB__HLF	9.5	7.9	3.5	4.7
9	SFV9R-1/2STB__HLF	10.0	8.4	4.0	5.2
10	SFV10R-1/2STB__HLF	10.5	8.9	4.5	5.7
11	SFV11R-1/2STB__HLF	11.0	9.4	5.0	6.2
12	SFV12R-1/2STB__HLF	11.5	9.9	5.5	6.7
13	SFV13R-1/2STB__HLF	12.0	10.4	6.0	7.2
14	SFV14R-1/2STB__HLF	12.5	10.9	6.5	7.7
15	SFV15R-1/2STB__HLF	13.0	11.4	7.0	8.2
16	SFV16R-1/2STB__HLF	13.5	11.9	7.5	8.7
17	SFV17R-1/2STB__HLF	14.0	12.4	8.0	9.2
18	SFV18R-1/2STB__HLF	14.5	12.9	8.5	9.7
19	SFV19R-1/2STB__HLF	15.0	13.4	9.0	10.2
20	SFV20R-1/2STB__HLF	15.5	13.9	9.5	10.7
21	SFV21R-1/2STB__HLF	16.0	14.4	10.0	11.2
22	SFV22R-1/2STB__HLF	16.5	14.9	10.5	11.7
23	SFV23R-1/2STB__HLF	17.0	15.4	11.0	12.2
24	SFV24R-1/2STB__HLF	17.5	15.9	11.5	12.7
25	SFV25R-1/2STB__HLF	18.0	16.4	12.0	13.2
26	SFV26R-1/2STB__HLF	18.5	16.9	12.5	13.7
27	SFV27R-1/2STB__HLF	19.0	17.4	13.0	14.2
28	SFV28R-1/2STB__HLF	19.5	17.9	13.5	14.7
29	SFV29R-1/2STB__HLF	20.0	18.4	14.0	15.2
30	SFV30R-1/2STB__HLF	20.5	18.9	14.5	15.7
31	SFV31R-1/2STB__HLF	21.0	19.4	15.0	16.2
32	SFV32R-1/2STB__HLF	21.5	19.9	15.5	16.7
33	SFV33R-1/2STB__HLF	22.0	20.4	16.0	17.2
34	SFV34R-1/2STB__HLF	22.5	20.9	16.5	17.7
35	SFV35R-1/2STB__HLF	23.0	21.4	17.0	18.2

CAT. NO. SFV (n) R – 1 ST B ___ HLF

- SFV — SERIES NAME
- (n) — NO. OF CONTACTS
- R — RIGHT ANGLE TYPE
- 1 — FOR FPC/FFC, CONTACT DIRECTION
  1. LOWER CONTACT TYPE
  2. UPPER CONTACT TYPE
- ST — FOR AUTOMATIC MOUNTING (SMT)
- B — PLATING VARIATION
- ___ — PACKAGE STYLE
- HLF — HALOGEN and LEAD FREE

NOTES

1. THIS PRODUCT IS THE CONNECTOR USED FOR FPC AND COPES WITH AUTOMATIC MOUNTING (SMT).
2. SEE PART DRAWINGS FOR DIMENSIONS A~D.

FCIconnect.com

Copyright FCI.

mat'l. code	surface ISO 1302	tolerance ISO 406 ISO 1101	projection	product family 58EF	CODE JP
	tolerances unless otherwise specified			title CAT. NO. TABLE FOR 0.5 mm CONTACT SPACING CONNECTOR (Cat. No. : SFV__R-1/2STB__HLF)	

ltr	ecn no	dr	date
A	J09-0075	S.W	'09/2/19

angles | linear | mm | scale X

dr	S. Nishida	2009-2-19
engr	S. Nishida	2009-2-19
chr	M. YAMASHITA	2009-2-19
appd	S. Chadamura	2009-2-19

dwg no JSA 97501 | sheet 1 of 1 | size A4

type Product Customer Drawing

sheet index	revision	A
	sheet	1

Rev. A

form: A4

PDM: Rev:A STATUS:Released Printed: Feb 22, 2009

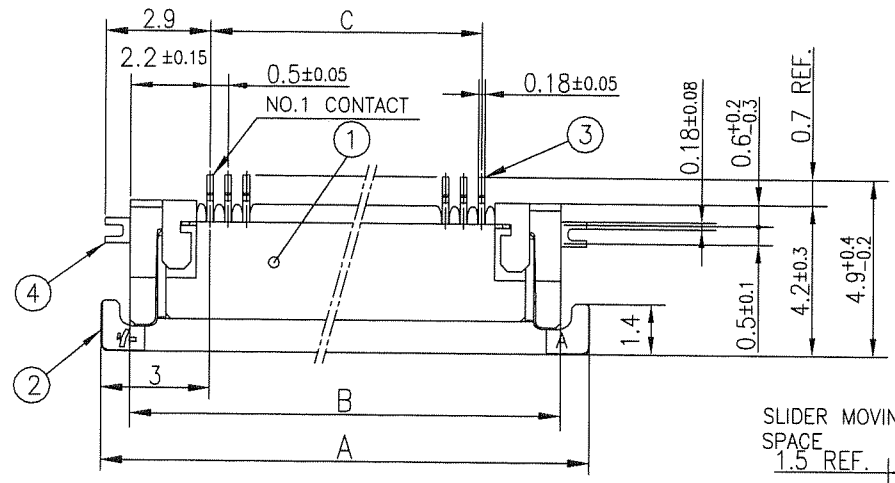

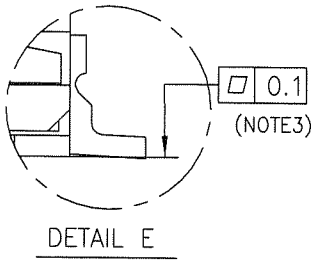

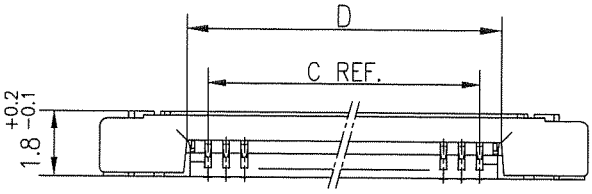

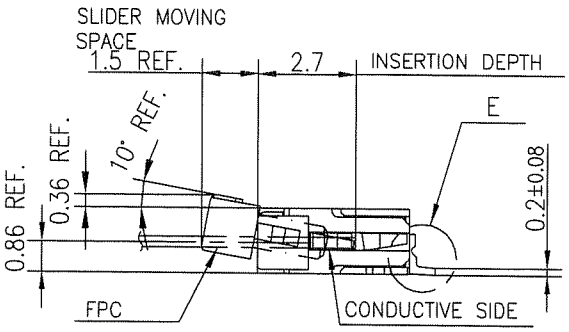

PT. NO.	PARTS NAME	MATERIAL	Q'TY	NOTE
1	HOUSING	13~35pin : LCP RESIN GLASS REINFORCED (UL94V-0) 4~12pin : POLYAMIDE RESIN GLASS REINFORCED (UL94V-0)	1	COLOR : BLACK (HALOGEN FREE)
2	SLIDER	PPS RESIN GLASS REINFORCED (UL94V-0)	1	COLOR : BLACK (HALOGEN FREE)
3	CONTACT	PHOSPHOR BRONZE	n	PLATING : GOLD
4	MOUNTING PLATE		2	PLATING : LEAD FREE

n : NO. OF CONTACTS

RECOMMENDED PC BOARD LAYOUT
(COMPONENT SIDE)

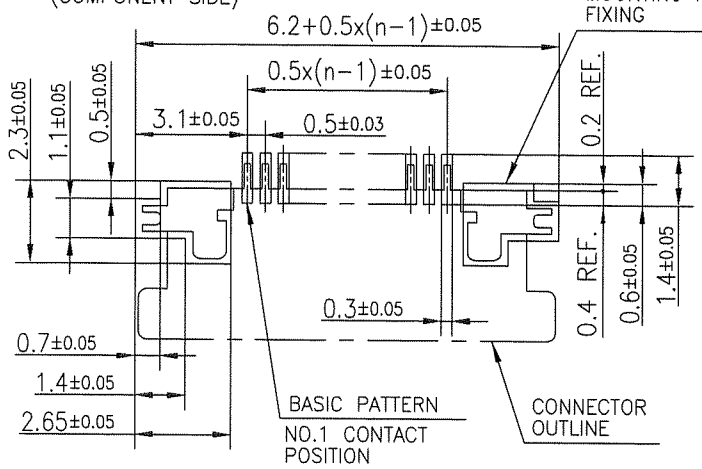

NOTES

1. THIS PRODUCT IS THE CONNECTOR USED FOR FPC AND COPES WITH AUTOMATIC MOUNTING (SMT).
2. THIS PRODUCT IS LOWER CONTACT TYPE CONNECTOR.
3. FLATNESS OF CONTACT TERMINAL AND MOUNTING PLATE MUST BE WITHIN TOLERANCE IN E PORTION DETAILED DRAWING.
4. THIS PRODUCT MEETS EUROPEAN UNION DIRECTIVES AND OTHER COUNTRY REGULATIONS AS DESCRIBED IN GS-22-008.
5. THE HOUSING WILL WITHSTAND EXPOSURE TO 260°C PEAK TEMPERATURE FOR 10 SECONDS IN A REFLOW SOLDERING OVEN.

ltr	ecn no	dr	date
A	J09-0075	S.W	2009-2-19
B	J10-0245	S.W	2010-9-14

mat'l. code

surface ISO 1302 ✓

tolerance ISO 406 ISO 1101

tolerances unless otherwise specified: angles; linear ±0.2

projection

mm

scale X

dr S. Watanabe 2010-9-14
engr S. Watanabe 2010-9-14
chr M. Sakamoto 2010-9-14
appd M. Mita Sep 16 '10

product family 58EF

CODE JP

title
CONNECTOR USED FOR FPC
WITH 0.5 mm CONTACT SPACING
(Cat No. : SFV__R-1STB__HLF)

dwg no JSA 97502

sheet 1 of 1

size A4

type Product Customer Drawing

sheet index | revision B | sheet 1

Rev. B

form: A4

FCIconnect.com
Copyright FCI.

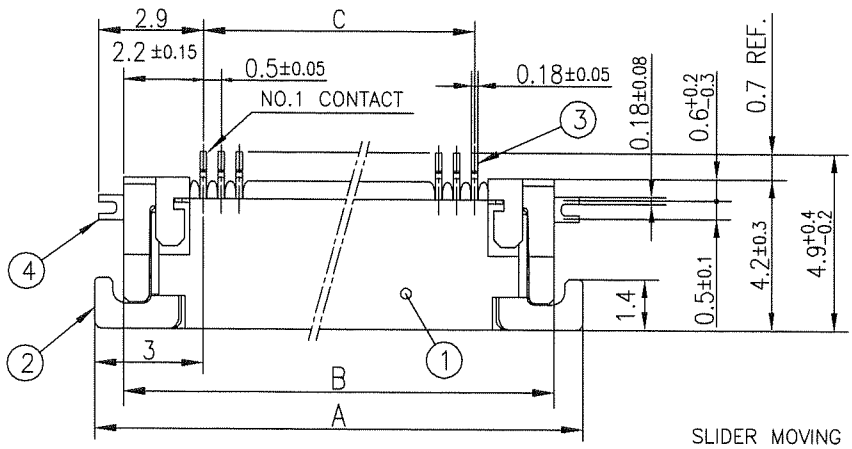

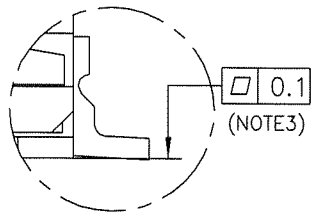

DETAIL E

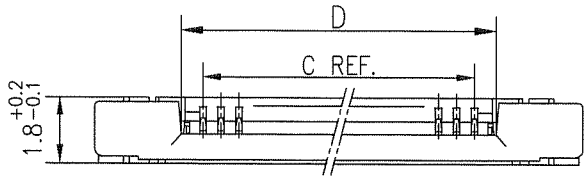

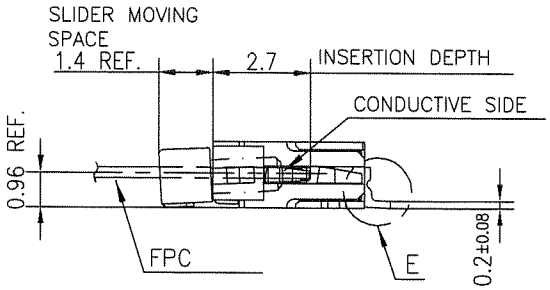

PT. NO.	PARTS NAME	MATERIAL	Q'TY	NOTE
1	HOUSING	13~35pin : LCP RESIN GLASS REINFORCED (UL94V-0) 4~12pin : POLYAMIDE RESIN GLASS REINFORCED (UL94V-0)	1	COLOR : BLACK (HALOGEN FREE)
2	SLIDER	PPS RESIN GLASS REINFORCED (UL94V-0)	1	COLOR : BLACK (HALOGEN FREE)
3	CONTACT	PHOSPHOR BRONZE	n	PLATING : GOLD
4	MOUNTING PLATE		2	PLATING : LEAD FREE

n : NO. OF CONTACTS

RECOMMENDED PC BOARD LAYOUT
(COMPONENT SIDE)

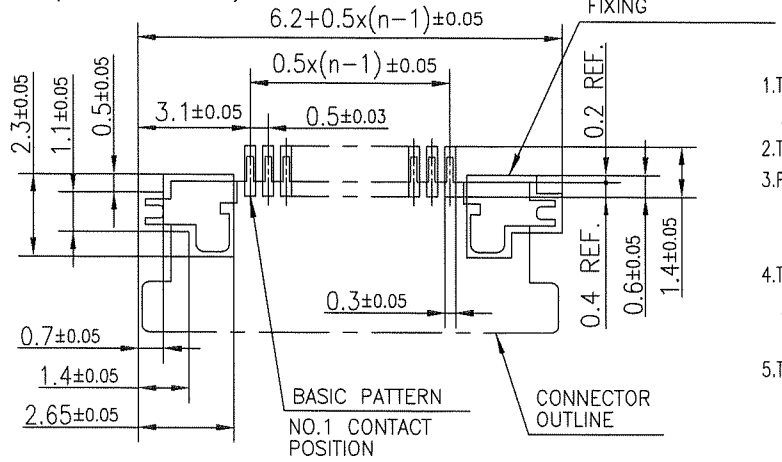

NOTES
1. THIS PRODUCT IS THE CONNECTOR USED FOR FPC AND COPES WITH AUTOMATIC MOUNTING (SMT).
2. THIS PRODUCT IS UPPER CONTACT TYPE CONNECTOR.
3. FLATNESS OF CONTACT TERMINAL AND MOUNTING PLATE MUST BE WITHIN TOLERANCE IN E PORTION DETAILED DRAWING.
4. THIS PRODUCT MEETS EUROPEAN UNION DIRECTIVES AND OTHER COUNTRY REGULATIONS AS DESCRIBED IN GS-22-008.
5. THE HOUSING WILL WITHSTAND EXPOSURE TO 260°C PEAK TEMPERATURE FOR 10 SECONDS IN A REFLOW SOLDERING OVEN.

mat'l. code				surface ISO 1302	tolerance ISO 406 ISO 1101	projection	product family 58EF	CODE JP
ltr	ecn no	dr	date	tolerances unless otherwise specified			title CONNECTOR USED FOR FPC WITH 0.5 mm CONTACT SPACING (Cat. No. : SFV__R-2STB__HLF)	
A	J09-0075	S.W	2009-2-19	angles	linear ±0.2	mm		
B	J10-0245	S.W	2010-9-14					
						scale X		
				dr	S. Watanabe 2010-9-14		dwg no JSA 97503	sheet 1 of 1 size A4
				engr	S. Watanabe 2010-9-14			
				chr	M. YAMASHITA 2010-9-14			
				appd	M. Ono Sep 14/10		type Product Customer Drawing	

sheet index	revision	B	Rev. B
	sheet	1	

form: A4

Copyright FCI.
FCIconnect.com

CAT. NO. & DIMENSIONS

NO. OF CONTACTS (n)	CAT. NO.	DIMENSIONS (NOTE3)		
		F ± 5	G ± 0.3	H ± 0.1
4	SFV4R-1/2STBE1HLF	20.4	16	—
5	SFV5R-1/2STBE1HLF	20.4	16	—
6	SFV6R-1/2STBE1HLF	20.4	16	—
7	SFV7R-1/2STBE1HLF	28.4	24	—
8	SFV8R-1/2STBE1HLF	28.4	24	—
9	SFV9R-1/2STBE1HLF	28.4	24	—
10	SFV10R-1/2STBE1HLF	28.4	24	—
11	SFV11R-1/2STBE1HLF	28.4	24	—
12	SFV12R-1/2STBE1HLF	28.4	24	—
13	SFV13R-1/2STBE1HLF	28.4	24	—
14	SFV14R-1/2STBE1HLF	28.4	24	—
15	SFV15R-1/2STBE1HLF	28.4	24	—
16	SFV16R-1/2STBE1HLF	28.4	24	—
17	SFV17R-1/2STBE1HLF	28.4	24	—
18	SFV18R-1/2STBE1HLF	28.4	24	—
19	SFV19R-1/2STBE1HLF	28.4	24	—
20	SFV20R-1/2STBE1HLF	28.4	24	—
21	SFV21R-1/2STBE1HLF	28.4	24	—
22	SFV22R-1/2STBE1HLF	28.4	24	—
23	SFV23R-1/2STBE1HLF	36.4	32	28.4
24	SFV24R-1/2STBE1HLF	36.4	32	28.4
25	SFV25R-1/2STBE1HLF	36.4	32	28.4
26	SFV26R-1/2STBE1HLF	36.4	32	28.4
27	SFV27R-1/2STBE1HLF	36.4	32	28.4
28	SFV28R-1/2STBE1HLF	36.4	32	28.4
29	SFV29R-1/2STBE1HLF	36.4	32	28.4
30	SFV30R-1/2STBE1HLF	36.4	32	28.4
31	SFV31R-1/2STBE1HLF	48.4	44	40.4
32	SFV32R-1/2STBE1HLF	48.4	44	40.4
33	SFV33R-1/2STBE1HLF	48.4	44	40.4
34	SFV34R-1/2STBE1HLF	48.4	44	40.4
35	SFV35R-1/2STBE1HLF	48.4	44	40.4

CAT. NO. SFV (n) R – 1 ST B E1 HLF

- SFV — SERIES NAME
- (n) — NO. OF CONTACTS
- R — RIGHT ANGLE TYPE
- 1 — FOR FPC/FFC, CONTACT DIRECTION
  1. LOWER CONTACT TYPE
  2. UPPER CONTACT TYPE
- ST — FOR AUTOMATIC MOUNTING (SMT)
- B — PLATING VARIATION
- E1 — TAPE PACKAGING
- HLF — HALOGEN and LEAD FREE

NOTES

1. THIS PRODUCT IS THE CONNECTOR USED FOR FPC AND COPES WITH AUTOMATIC MOUNTING (SMT).
2. THIS CATALOG NO. INDICATES PLASTIC TAPE PACKAGED CONNECTOR.
3. SEE PART DRAWINGS FOR DIMENSIONS F~H.

FCIconnect.com
Copyright FCI.

mat'l. code			surface ISO 1302 ✓	tolerance ISO 406 ISO 1101	projection
ltr	ecn no	dr	date	tolerances unless otherwise specified	
A	J09-0075	S.W	'09/2/19	angles / linear	mm
					scale ℵ
				dr S. Nitta	2009-2-19
				engr S. Nitta	2009-2-19
				chr H. YAMASHITA	2009-2-19
				appd S. Chidozumi	2009-2-18

product family 58EF — CODE JP

title: CAT. NO. TABLE FOR PLASTIC TAPE PACKAGED 0.5 mm CONTACT SPACING CONNECTOR (Cat. No. : SFV__R-1/2STBE1HLF)

dwg no JSA 97504 — sheet 1 of 1 — size A4

type Product Customer Drawing

sheet index	revision	A	Rev. A
	sheet	1	

form: A4

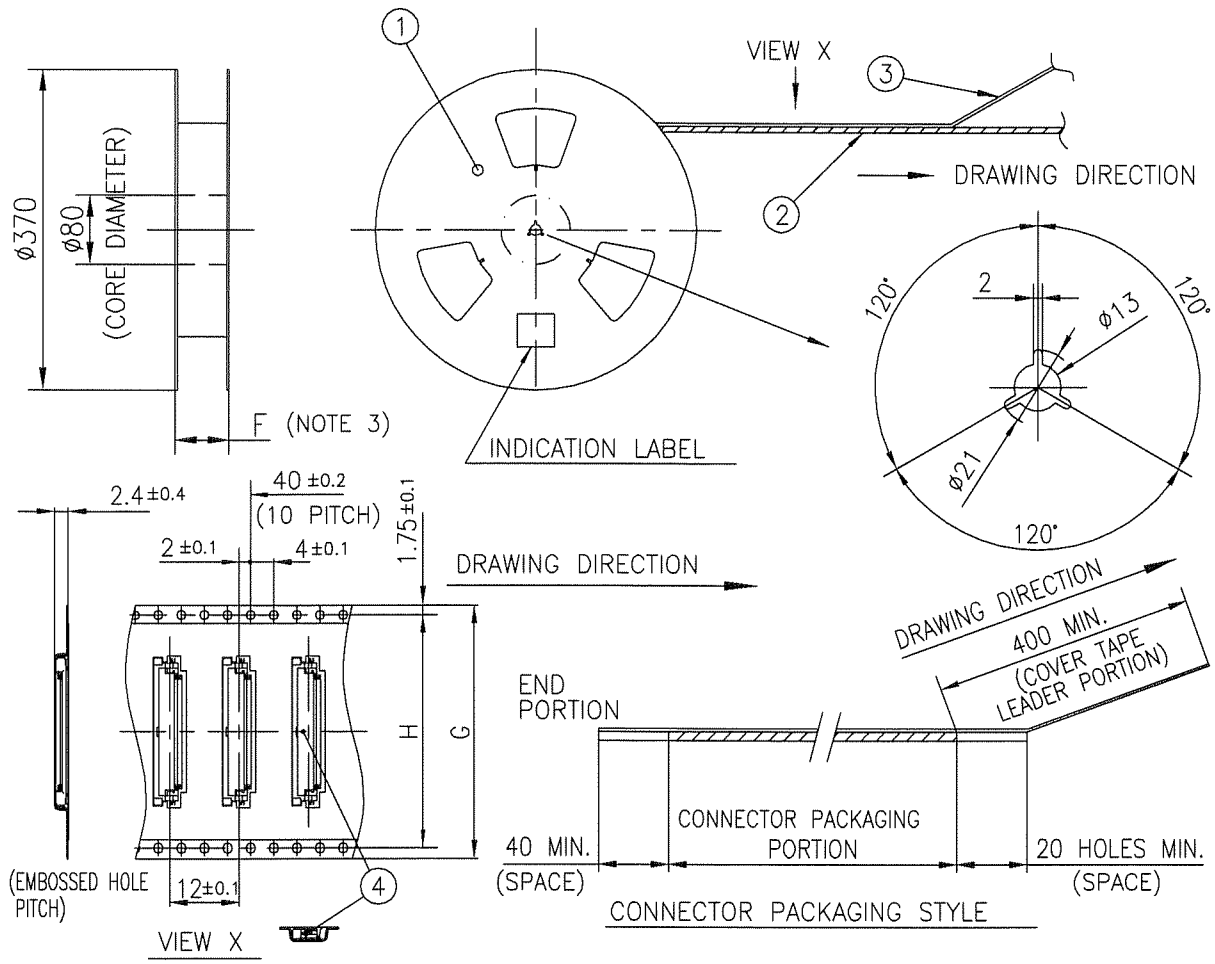

PT. NO.	PARTS NAME	CAT. NO.	MATERIAL	Q'TY	NOTE
1	REEL	———	CARDBOARD	1	COLOR : WHITE
2	PLASTIC (EMBOSS) TAPE	———	A-PET	——	COLOR : TRANSPARENCY
3	COVER	———	POLYESTER	——	COLOR : TRANSPARENCY
4	CONNECTOR	SFV__R-1STB__HLF	SEE ATTACHED DWG.	3000	LOWER CONTACT TYPE

NOTES

1. THIS IS PLASTIC TAPE PACKAGED CONNECTOR USED FOR FPC AND COPES WITH AUTOMATIC MOUNTING (SMT).
2. SEE JIS C 0806 (PACKING OF ELECTRONIC COMPONENTS ON CONTINUOUS TAPES (SURFACE MOUNTING DEVICES)) FOR SHAPE AND DIMENSIONS OF PLASTIC (EMBOSS) TAPE AND REEL.
3. F DIMENSION IS PORTION OF THE CORE.

mat'l. code				surface 58 ISO 1302	tolerance ISO 406 ISO 1101	projection	product family 58EF / CODE JP
ltr	ecn no	dr	date	tolerances unless otherwise specified			title PLASTIC TAPE PACKAGED 0.5 mm CONTACT SPACING CONNECTOR (Cat. No. : SFV__R-1STBE1HLF)
A	J09-0075	S.W	'09/2/19	angles ±5'	linear ±5	mm	
						scale X	
				dr	S. Watanabe 2009-2-19	FCI	dwg no JSA 97505 / sheet 1 of 1 / size A4
				engr	S. Watanabe 2009-2-19		
				chr	M. YAMASHITA 2009-2-19		
				appd	S. Okadome 2009-2-19		type Product Customer Drawing
sheet index	revision	A					Rev. A
	sheet	1					

form: A4

FCIconnect.com
Copyright FCI.

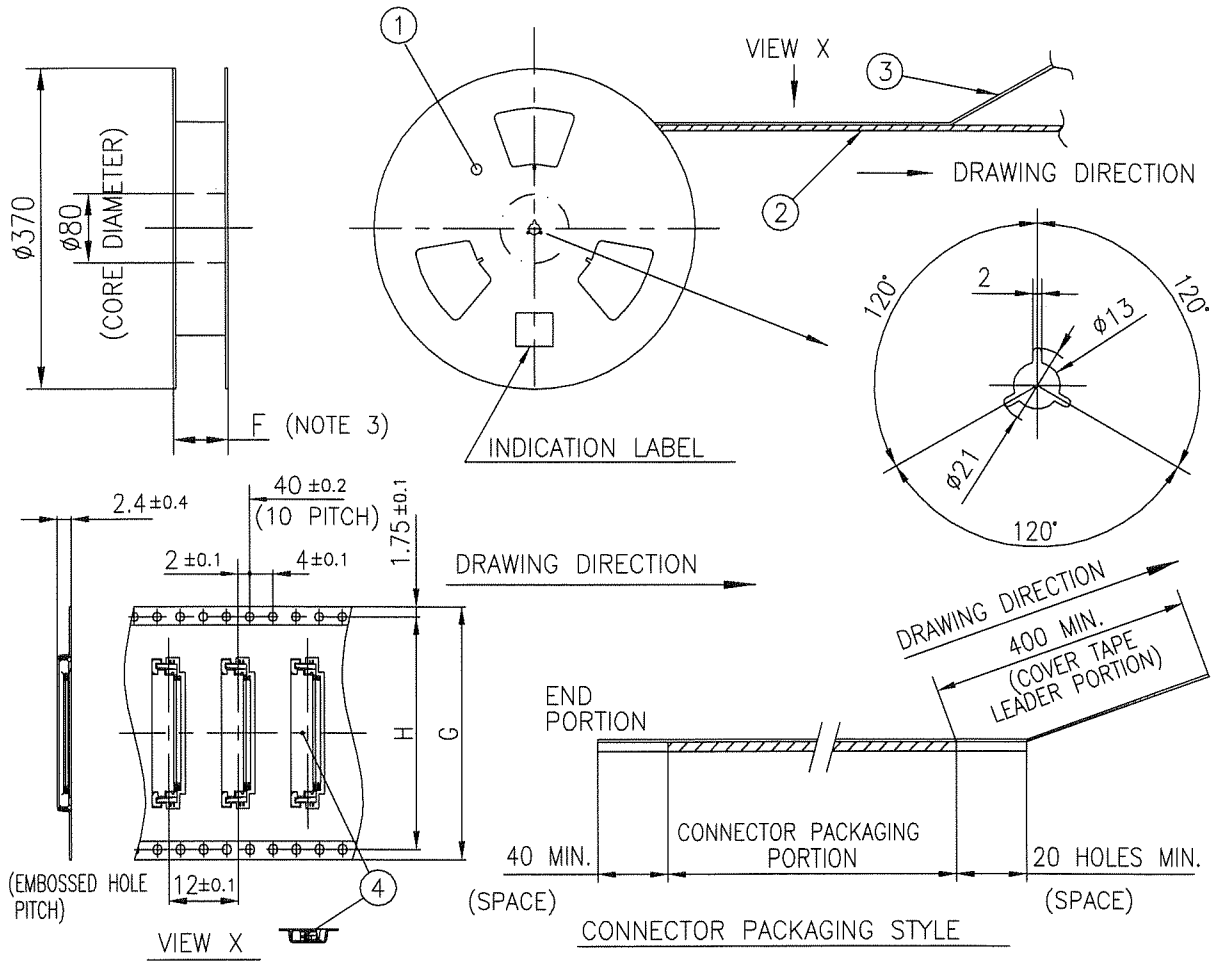

PT. NO.	PARTS NAME	CAT. NO.	MATERIAL	Q'TY	NOTE
1	REEL	———	CARDBOARD	1	COLOR : WHITE
2	PLASTIC (EMBOSS) TAPE	———	A-PET	——	COLOR : TRANSPARENCY
3	COVER	———	POLYESTER	——	COLOR : TRANSPARENCY
4	CONNECTOR	SFV__R-2STB__HLF	SEE ATTACHED DWG.	3000	UPPER CONTACT TYPE

NOTES

1. THIS IS PLASTIC TAPE PACKAGED CONNECTOR USED FOR FPC AND COPES WITH AUTOMATIC MOUNTING (SMT).
2. SEE JIS C 0806 (PACKING OF ELECTRONIC COMPONENTS ON CONTINUOUS TAPES (SURFACE MOUNTING DEVICES)) FOR SHAPE AND DIMENSIONS OF PLASTIC (EMBOSS) TAPE AND REEL.
3. F DIMENSION IS PORTION OF THE CORE.

mat'l. code				surface ISO 1302 ✓	tolerance ISO 406 ISO 1101	projection	product family 58EF	CODE JP
ltr	ecn no	dr	date	tolerances unless otherwise specified			title PLASTIC TAPE PACKAGED 0.5 mm CONTACT SPACING CONNECTOR (Cat. No. : SFV__R-2STBE1HLF)
A	J09-0075	S.W	'09/2/19	angles ±5°	linear ±5	mm	
						scale ℵ	
				dr	S. Nishida 2009-2-19	FCI	dwg no JSA 97506 sheet 1 of 1 size A4
				engr	S. Nishida 2009-2-19		
				chr	M. YAMASHITA 2009-2-19		
				appd	S. Chodamori 2009-2-19		type Product Customer Drawing
sheet index	revision	A					Rev. A
	sheet	1					

form: A4

FCIconnect.com
Copyright FCI.

RECOMMENDED CABLE (FPC)

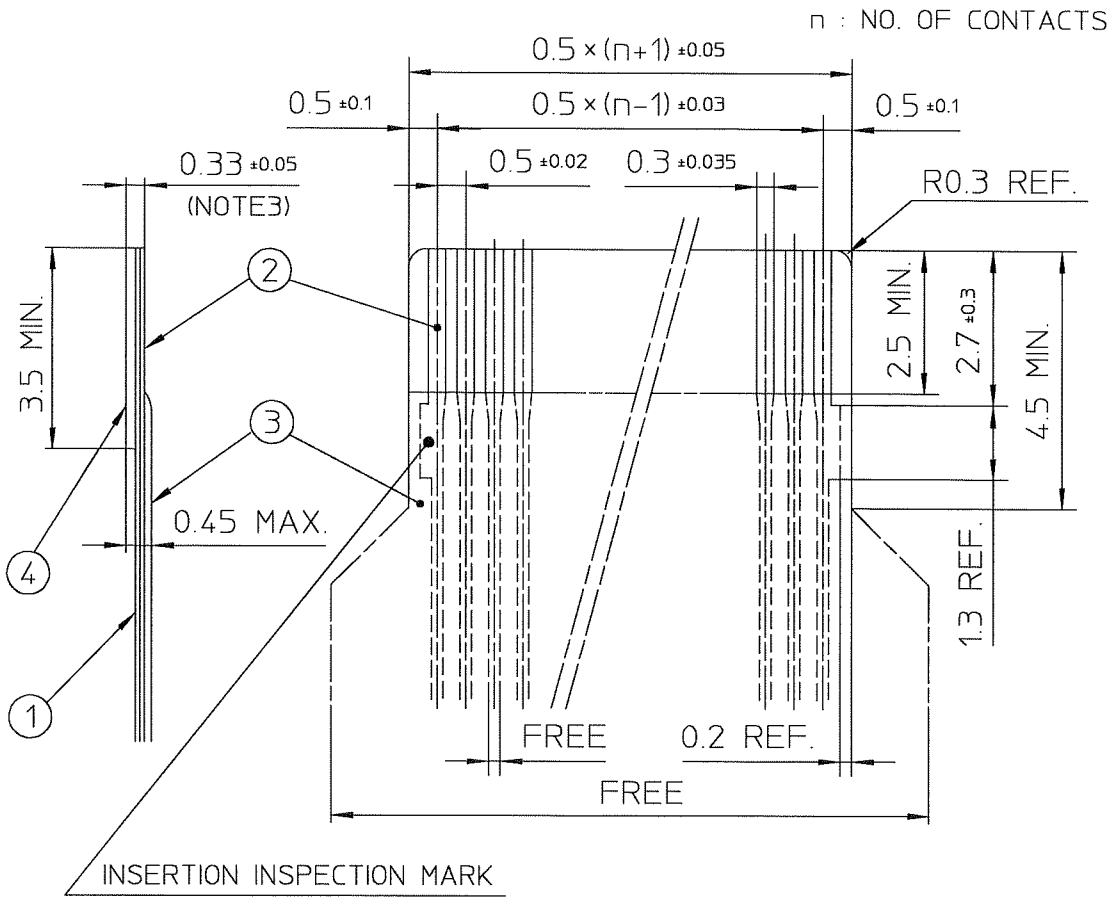

PT. NO.	PARTS NAME	MATERIAL	THICKNESS(μm)
1	BASE FILM	POLYIMIDE OR POLYESTER OR EQUAL	25
2	CONDUCTOR	COPPER FOIL(PLATING : GOLD)	35
3	OVERLAY	POLYIMIDE OR POLYESTER OR EQUAL	——
4	SUPPORTING TAPE	POLYESTER OR POLYIMIDE OR EQUAL	188

NOTES

1. NO BURR AT EACH PORTION.
2. NO PEELING IN COMMON USE.
3. TOTAL THICKNESS LIMIT OF EACH MATERIAL (INCLUDING ADHESIVE AGENT) IS SPECIFIED.

ltr	ecn no	dr	date
A	J04-0186	H.T	'04/8/9
B	J04-0454	H.T	'05/2/7
C	J06-0372	H.T	'06/9/7

mat'l. code

surface ISO 1302 ✓ tolerance ISO 406 ISO 1101

tolerances unless otherwise specified: angles, linear

projection

scale X

dr 9/7/06
engr 9/7/06
chr 9/8/06
appd 9/11/06

product family 58EF

title RECOMMENDED CABLE (Cat. No. : SFV__R-1/2ST___LF)

dwg no JSA 96019 sheet 1 of 1 size A4

type Product Customer Drawing

sheet index revision C sheet 1 Rev. C

SC-SFV06 JSA96013 form: A4

Copyright FCI
FCIconnect.com

RECOMMENDED CABLE (FFC)

n : NO. OF CONTACTS

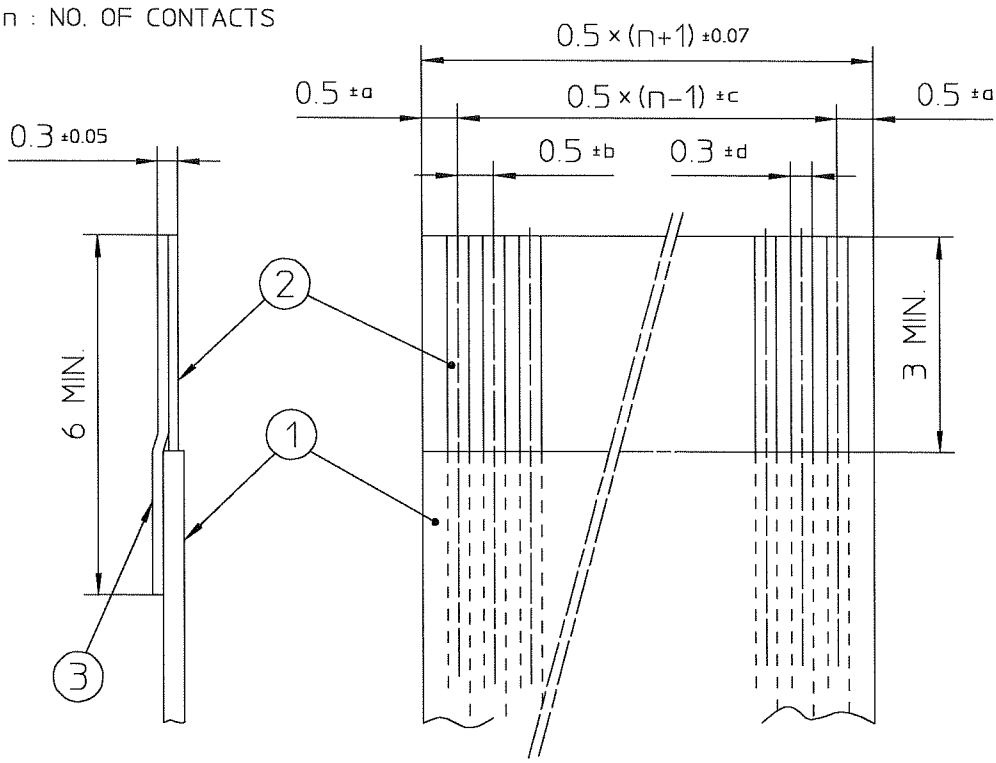

KIND OF FFC (NOTE3)	DIMENSIONAL TOLERANCE			
	a	b	c	d
1	±0.07	±0.04	±0.05	±0.02
2	±0.1	±0.03	±0.03	±0.025

PT. NO.	PARTS NAME	MATERIAL
1	INSULATOR	FLAME RESISTING POLYESTER OR EQUAL
2	CONDUCTOR	COPPER FOIL (PLATING : GOLD)
3	SUPPORTING TAPE	FLAME RESISTING POLYESTER OR EQUAL

NOTES

1. NO BURR AT EACH PORTION.
2. NO PEELING IN COMMON USE.
3. EITHER KIND1 OR KIND2 OF FFC CAN ACCEPT DIMENSIONAL TOLERANCE a,b,c AND d.

ltr	ecn no	dr	date
A	J06-0499	H.T	11/27/'06

mat'l. code

surface ISO 1302 | tolerance ISO 406 ISO 1101

tolerances unless otherwise specified: angles | linear

projection

scale ℵ

dr 11/27/06
engr 11/27/06
chr 11/27/06
appd 11/28/06

product family: 58EF

title: RECOMMENDED CABLE (Cat. No. : SFV__R-1/2ST__)

dwg no: JSA 97202 | sheet 1 of 1 | size A4

type Product Customer Drawing

sheet index | revision A | sheet 1

Rev. A

form: A4

FCIconnect.com
Copyright FCI

Общество с ограниченной ответственностью «МосЧип» ИНН 7719860671 / КПП 771901001
Адрес: 105318, г.Москва, ул.Щербаковская д.3, офис 1107

Данный компонент на территории Российской Федерации

Вы можете приобрести в компании MosChip.

Для оперативного оформления запроса Вам необходимо перейти по данной ссылке:

http://moschip.ru/get-element

Вы можете разместить у нас заказ для любого Вашего проекта, будь то серийное производство или разработка единичного прибора.

В нашем ассортименте представлены ведущие мировые производители активных и пассивных электронных компонентов.

Нашей специализацией является поставка электронной компонентной базы двойного назначения, продукции таких производителей как XILINX, Intel (ex.ALTERA), Vicor, Microchip, Texas Instruments, Analog Devices, Mini-Circuits, Amphenol, Glenair.

Сотрудничество с глобальными дистрибьюторами электронных компонентов, предоставляет возможность заказывать и получать с международных складов практически любой перечень компонентов в оптимальные для Вас сроки.

На всех этапах разработки и производства наши партнеры могут получить квалифицированную поддержку опытных инженеров.

Система менеджмента качества компании отвечает требованиям в соответствии с ГОСТ Р ИСО 9001, ГОСТ РВ 0015-002 и ЭС РД 009

Офис по работе с юридическими лицами:

105318, г.Москва, ул.Щербаковская д.3, офис 1107, 1118, ДЦ «Щербаковский»

Телефон: +7 495 668-12-70 (многоканальный)

Факс: +7 495 668-12-70 (доб.304)

E-mail: info@moschip.ru

Skype отдела продаж:
moschip.ru
moschip.ru_4
moschip.ru_6
moschip.ru_9