OMRON

Sensor connectors, reflectors, mounting brackets, accessories

XS, Y92E, E39

The sensor accessory portfolio provides the products required to connect, mount or operate the main photoelectric and inductive sensors. The accessories are designed to match the performance levels of the respective sensors from general applications to the most challenging enviroments.

- Reflectors for standard applications, special mounting requirements or special environments
- M8, M12 cable connectors
- Special fiber and photomicrosensor connectors
- Mounting brackets for square and cylindrical sensor shapes

Content

Cable connectors – quick guide and selection table 2
Mounting accessories for standard photoelectric, inductive and capacitive sensors 24
Reflectors for retro-reflective photoelectric sensors 34

Cable connectors – quick guide and selection table

Size	Shape	Type	Features	Material		Order code		Extended Portfolio and Specs on Page
				Nut	Cable			
M8		**General purpose (screw)**	3 pin (LED optionally)	Brass (CuZn)	PVC 2 m PUR 2 m	XS3F-M8PVC3S2M XS3F-M8PUR3S2M	XS3F-M8PVC3A2M XS3F-M8PUR3A2M	3
			4pin		PVC 2 m PUR 2 m	XS3F-M8PVC4S2M XS3F-M8PUR4S2M	XS3F-M8PVC4A2M XS3F-M8PUR4A2M	3
		Detergent resistant	4 pin	Stainless steel (SUS316L)	PVC 2 m	Y92E-S08PVC4S2M-L	Y92E-S08PVC4A2M-L	6
		Robotic	4 pin	Brass (CuZn)	Robotic PVC 2 m	XS3F-M421-402-R	XS3F-M422-402-R	8
M12		**General purpose (screw)**	3 wire (LED optionally)	Brass (CuZn)	PVC 2 m PUR 2 m	XS2F-M12PVC3S2M XS2F-M12PUR3S2M	XS2F-M12PVC3A2M XS2F-M12PUR3A2M	3
			4 wire		PVC 2 m PUR 2 m	XS2F-M12PVC4S2M XS2F-M12PUR4S2M	XS2F-M12PVC4A2M XS2F-M12PUR4A2M	3
			5 wire		PVC 2 m PUR 2 m	XS2F-M12PVC5S2M XS2F-M12PUR5S2M	XS2F-M12PVC5A2M XS2F-M12PUR5S2M	3
		Detergent resistant	4 wire	Stainless steel (SUS316L)	PVC 2 m	Y92E-S12PVC4S2M-L	Y92E-S12PVC4A2M-L	6
		105°C Heat resistant	4 wire	Stainless steel (SUS316L)	Heat resistant PVC 2 m	XS2F-E421-D80-E	XS2F-E422-D80-E	12
		Twist & click	4 wire	Nickel plated Zinc	PVC 2 m PUR 2 m	XS5F-D421-D80-A XS5F-D421-D80-P	XS5F-D422-D80-A XS5F-D422-D80-P	14
		Robotic	4 wire	Brass (CuZn)	Robotic PVC 2 m	XS2F-D421-D80-R	XS2F-D422-D80-R	8
Fiber amplifier (E3X) connector	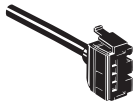	**Fiber amplifier connectors**	Special fiber connector - 4 wire	PBT	PVC 2 m	E3X-CN21		19
			Special fiber connector + M8 plug	Plug: Zinc diecast	PVC 30 cm with M8 4-pin plug	E3X-CN21-M3J-2 0.3M		19
			Special fiber connector + M12 plug		PVC 30 cm with M12 4-pin plug	E3X-CN21-M1J 0.3M		19
Photo-micro-sensor (EE-SX) connector Cable connector		**Cable connector**	standard cable	Nylon	PVC 1 m	EE-1017 1M		21
			robotic cable			EE-1017-R 1M		21
M8/M12		**Confection-able**	Plugs and connectors for self assembly	Brass	n.a.	XS2G, XS2C Y92E_conf		15
M12		**Field I/0 boxes**	Direct wiring or DeviceNet communi-cation	-		XW3B, DRT2		18
M8/M12		**T-connectors, covers, accessories and extended wiring portfolio**	n.a.	-		XS2R, XS3R, XY2F, ..		23

General purpose connectors (M8/M12)

XS3F, XS2F

Ordering information

Type	Size	Material		Features	Shape	Length (m)	Order code
		Nut	Cable				
General purpose	M8	Brass (Nickel plated)	PVC	3 pin	angled	2	XS3F-M8PVC3A2M
						5	XS3F-M8PVC3A5M
					straight	2	XS3F-M8PVC3S2M
						5	XS3F-M8PVC3S5M
				4 pin	angled	2	XS3F-M8PVC4A2M
						5	XS3F-M8PVC4A5M
					straight	2	XS3F-M8PVC4S2M
						5	XS3F-M8PVC4S5M
	M12			3 wire	angled	2	XS2F-M12PVC3A2M
						5	XS2F-M12PVC3A5M
					straight	2	XS2F-M12PVC3S2M
						5	XS2F-M12PVC3S5M
				4 wire	angled	2	XS2F-M12PVC4A2M
						5	XS2F-M12PVC4A5M
					straight	2	XS2F-M12PVC4S2M
						5	XS2F-M12PVC4S5M
				5 wire	angled	2	XS2F-M12PVC5A2M
						5	XS2F-M12PVC5A5M
					straight	2	XS2F-M12PVC5S2M
						5	XS2F-M12PVC5S5M
	M8		PUR	3 pin	angled	2	XS3F-M8PUR3A2M
						5	XS3F-M8PUR3A5M
					straight	2	XS3F-M8PUR3S2M
						5	XS3F-M8PUR3S5M
				4 pin	angled	2	XS3F-M8PUR4A2M
						5	XS3F-M8PUR4A5M
					straight	2	XS3F-M8PUR4S2M
						5	XS3F-M8PUR4S5M
	M12			3 wire	angled	2	XS2F-M12PUR3A2M
						5	XS2F-M12PUR3A5M
					straight	2	XS2F-M12PUR3S2M
						5	XS2F-M12PUR3S5M
				4 wire	angled	2	XS2F-M12PUR4A2M
						5	XS2F-M12PUR4A5M
					straight	2	XS2F-M12PUR4S2M
						5	XS2F-M12PUR4S5M
				5 wire	angled	2	XS2F-M12PUR5A2M
						5	XS2F-M12PUR5A5M
					straight	2	XS2F-M12PUR5S2M
						5	XS2F-M12PUR5S5M

Note: M12 2-wire models are available for AC and DC applications.
Contact your Omron representative

Specifications

		M8	M12
Rated current		1 A	4 A
Rated voltage		125 VDC	125 VDC, 250 VAC
Degree of protection		IP67 (IEC 60529)	
Ambient temperature	**PUR**	Fixed cable: -50°C to 80°C Moving cable: -25°C to 80°C	
	PVC	-25°C to 70°C	

Pin arrangement

M8 3 poles	M8 4 poles
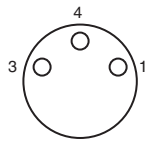 **1 = brown** **3 = blue** **4 = black**	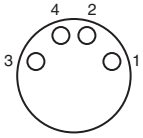 **1 = brown** **2 = white** **3 = blue** **4 = black**

M12 3 poles	M12 4 poles	M12 5 poles
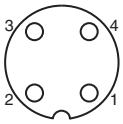 **1 = brown** **2 = n.c.** **3 = blue** **4 = black**	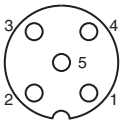 **1 = brown** **2 = white** **3 = blue** **4 = black** **5 = n.c.**	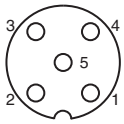 **1 = brown** **2 = white** **3 = blue** **4 = black** **5 = green / yellow**

Materials

Pin block	PBT resin (UL 94V-0)
Contacts	Brass/ nickel base, 0.4 µm gold plating
Fixture	Brass/ nickel plated
Cover	Polyester elastomer (UL 94V-O)
O-ring	Rubber

Dimensions

XS3F

M8 Screw-on cable connectors

Straight Connectors

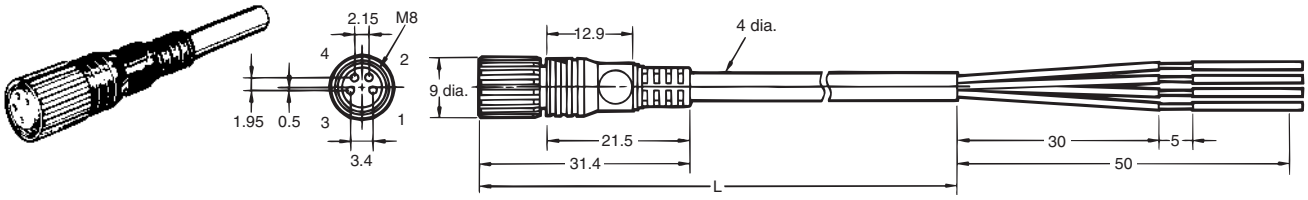

L-shaped Connectors

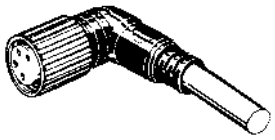

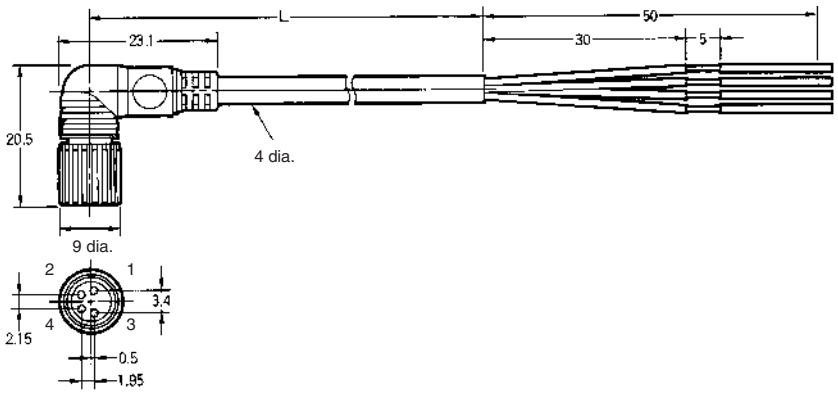

XS2F

M12 Screw-on cable connectors

Straight Connectors

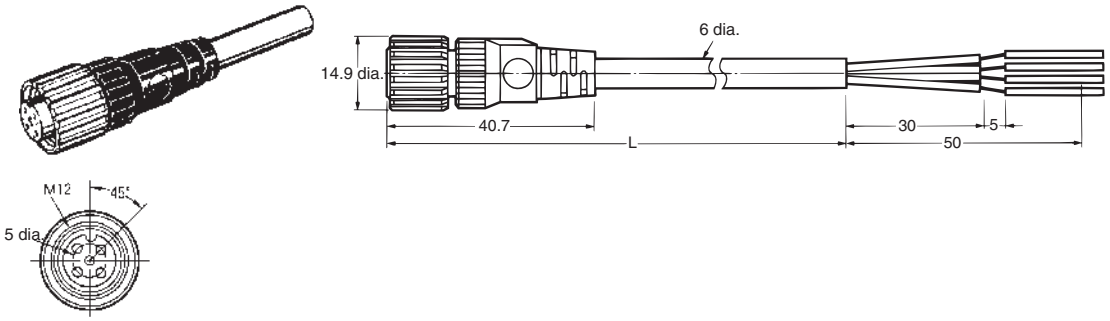

DC

L-shaped Connectors

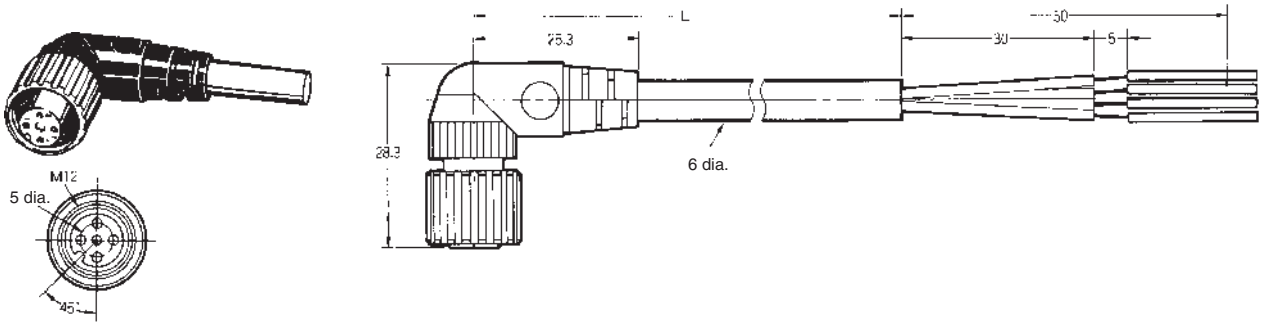

DC

Wiring Diagram (M8 and M12)

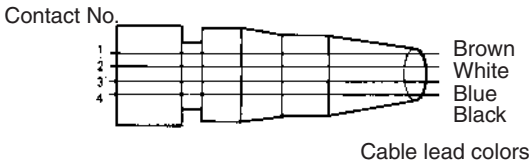

Cable lead colors

Detergent resistant cable connectors (M8 / M12)

Y92E-S

Ordering information

Detergent resistant models

Type	Size	Material		Features	Shape	Length (m)*1	Order code
		Nut	Cable				
detergent resistant	M8	SUS 316L	PVC	3 pin	Angled	2	Y92E-S08PVC3A2M-L
						5	Y92E-S08PVC3A5M-L
					Straight	2	Y92E-S08PVC3S2M-L
						5	Y92E-S08PVC3S5M-L
				4 pin	Angled	2	Y92E-S08PVC4A2M-L
						5	Y92E-S08PVC4A5M-L
					Straight	2	Y92E-S08PVC4S2M-L
						5	Y92E-S08PVC4S5M-L
	M12				Angled	2	Y92E-S12PVC4A2M-L
						5	Y92E-S12PVC4A5M-L
					Straight	2	Y92E-S12PVC4C2M-L
						5	Y92E-S12PVC4S5M-L

*1 For different cable length please contact your Omron representative

Specifications

Rated current	4 A
Rated voltage	M8 3 pin: 60 VDC M8 4 pin: 30 VDC M12 4-wire: 250 VDC
Degree of protection	IP67 (IEC 60529); IP69k (after DIN 40050-1)
Ambient temperature	-25°C to +70°C

Pin arrangement

M8 3 pin		M8 4 pin		M12 4 pin	
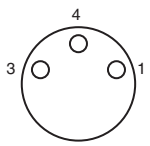	1 = brown 3 = blue 4 = black	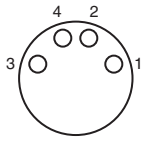	1 = brown 2 = white 3 = blue 4 = black	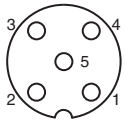	1 = brown 2 = white 3 = blue 4 = black 5 = n.c.

Materials

Pin block	PVC
Contacts	CuSn, nickel base, 0.3 µm gold plating
Fixture	Stainless steel
Cover	PVC
O-ring	EPDM

Dimensions

Y92E-S08

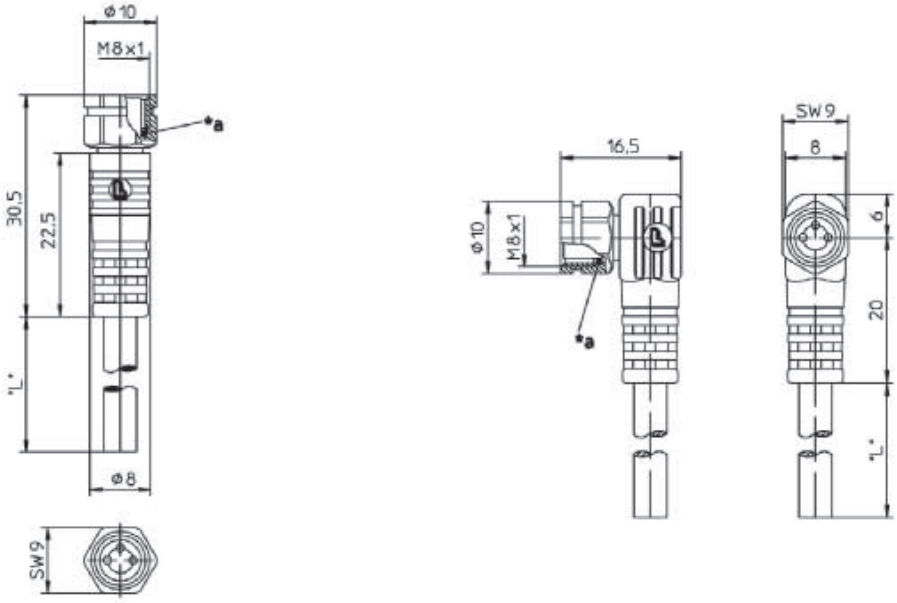

Y92E-S12

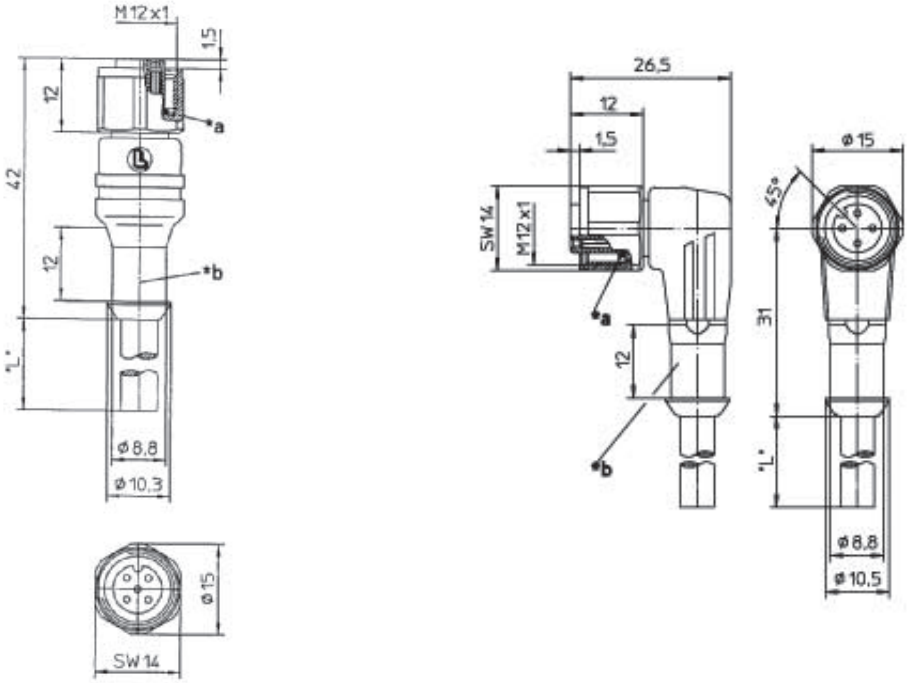

Wiring Diagram (M8 and M12)

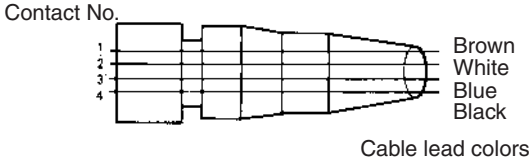

Cable lead colors

Robot Cable Connectors (M8/M12)

XS3F-_-R, XS2F-_-R

Ordering Information

Type	Size	Material		Features	Shape	Length (m)	Order code
		Nut	Cable				
Vibration-proof robot cable (screw on)	M8	Brass (CuZn)	PVC	4 pin	Straight	2	XS3F-M421-402-R
						5	XS3F-M421-405-R
					Angled	2	XS3F-M422-402-R
						5	XS3F-M422-405-R
Vibration-proof robot cable (snap on)		Thermoplastic	PVC	4 pin	Straight	2	XS3F-S421-402-R
						5	XS3F-S421-405-R
					Angled	2	XS3F-S422-402-R
						5	XS3F-S422-405-R
Vibration-proof robot cable (screw on)	M12	Brass (CuZn)	PVC	2 wire	Straight	2	XS2F-D421-DA0-R
				4 wire			XS2F-D421-D80-R
				2 wire		5	XS2F-D421-GA0-R
				4 wire			XS2F-D421-G80-R
				2 wire	Angled	2	XS2F-D422-DA0-R
				4 wire			XS2F-D422-D80-R
				2 wire		5	XS2F-D422-GA0-R
				4 wire			XS2F-D422-G80-R
Vibration proof robot cable (srew on) for AC usage				2 wire	Straight	2	XS2F-A421-DB0-R
				4 wire			XS2F-A421-D90-R
				2 wire		5	XS2F-A421-GB0-R
				4 wire			XS2F-A421-G90-R
				2 wire	Angled	2	XS2F-A422-DB0-R
						5	XS2F-A422-GB0-R

Specifications

	M8	M12
Rated current	1 A	3 A
Rated voltage	125 VDC	125 VDC, 250 VAC
Degree of protection	IP67 (IEC529)	IP67 (IEC529)
Ambient temperature	Operating: -25°C to 70°C	Operating: -25°C to 70°C

Pin arrangement

M8	M12	
DC type		**AC type**
Socket 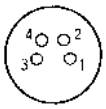	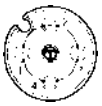	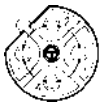

Materials

	M8	M12
Pin Block	PBT resin/light gray or black	PBT resin (UL94V-0), light grey or dark grey
Contacts	Brass/nickel base, 0.4-μm gold plating	Phosphor bronze, nickel base, 0.4-μm gold plating
Fixture	Brass/nickel plated	
Cover	Thermoplastic elastomer/black	Polyester elastomer
O-ring	Rubber	

Dimensions

XS3F-_-R

M8 Screw-on cable connectors

Straight Connectors

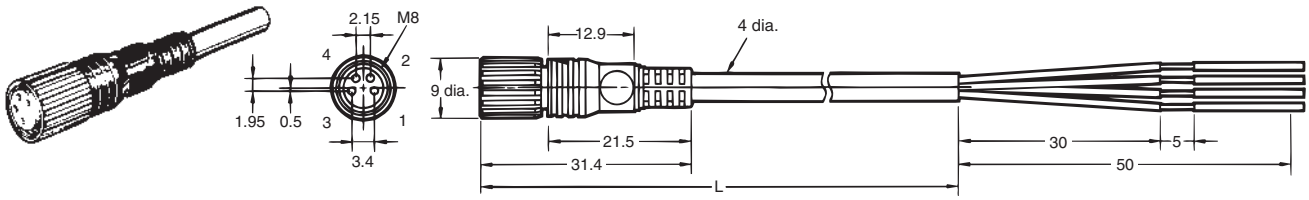

Angled Connectors

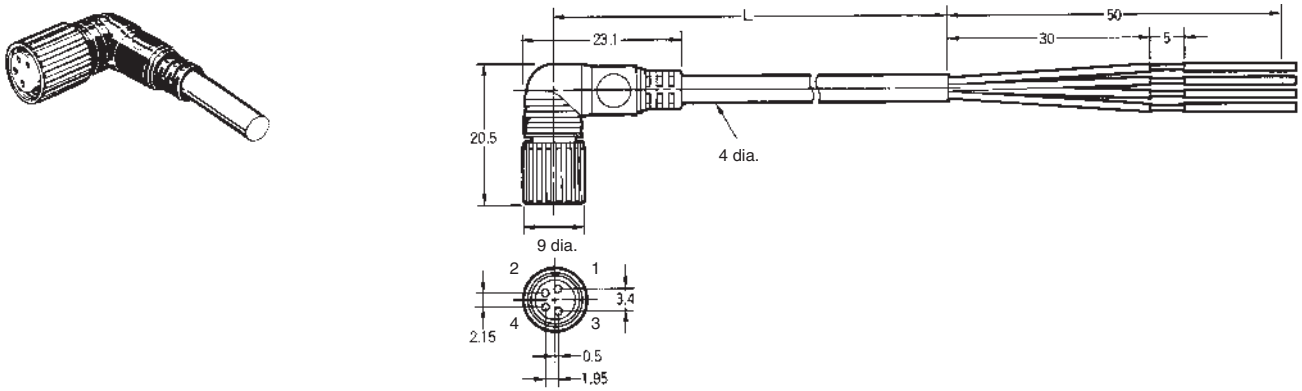

Wiring Diagram (M8)

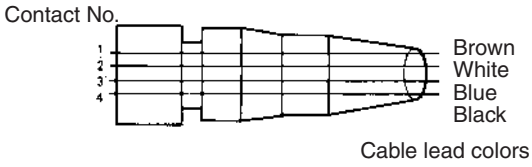

M8 Snap-on cable connectors

Straight Connectors

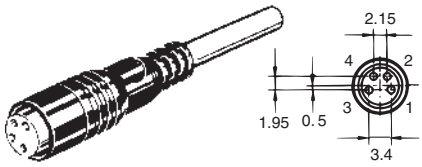

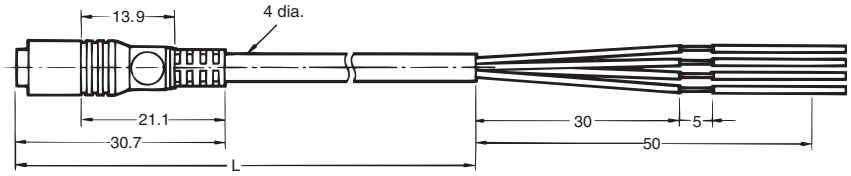

Angled Connectors

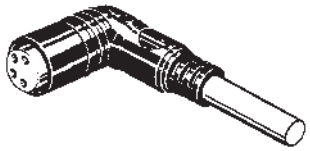

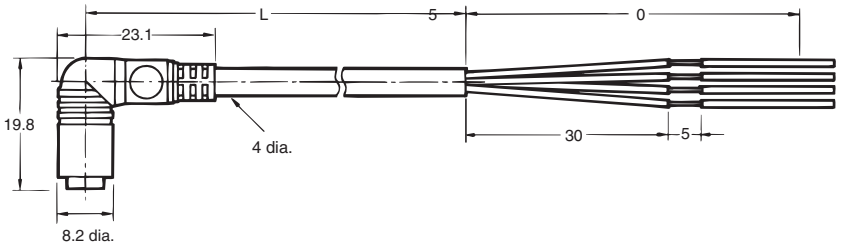

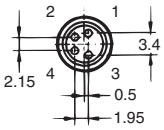

XS2F-_-R

M12 Screw-on cable connectors

Straight Connectors

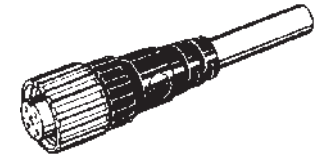

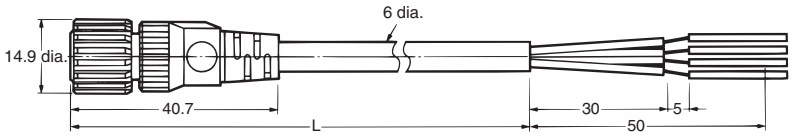

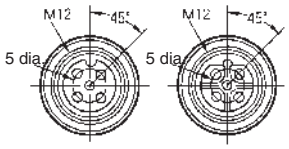

DC AC

Angled Connectors

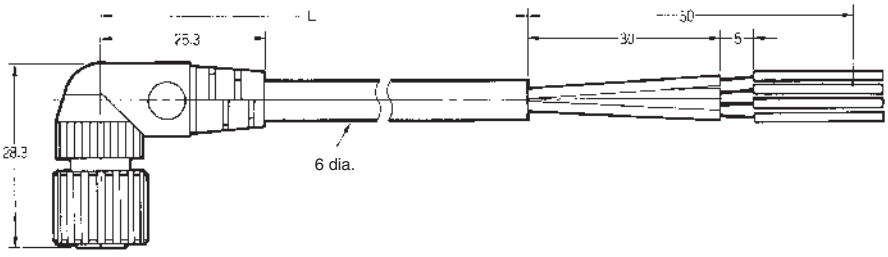

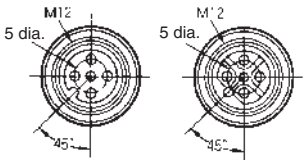

DC AC

Wiring Diagram (M12)

2-wire model	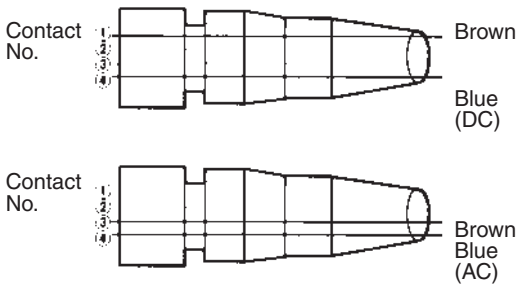
4-wire model	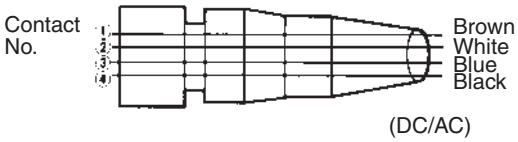

Heat & chemical resistant cable connectors

XS2F-_-E

Ordering information

Type	Size	Material		Features	Shape	Length (m)	Order code
		Nut	Cable				
Heat and detergent resistant	M12	SUS316L	Heat resistant PVC	4 pin	straight	2	XS2F-E421-D80-E
						5	XS2F-E421-G80-E
					angled	2	XS2F-E422-D80-E
						5	XS2F-E422-G80-E

Specifications

Rated current	3 A
Rated voltage	125 VDC, 250 VAC
Degree of protection	IP67 (IEC 60529); IP69k (DIN 40050 part 9)
Ambient temperature	-25°C to 105°C

Pin arrangement

M12 4 pin

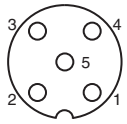

1 = brown
2 = white
3 = blue
4 = black
5 = n.c.

Materials

Pin block	PBT (UL94V-0), light gray
Contacts	Phosphor bronze, nickel base, 0.4 µm gold plating
Fixture	SUS316L
Cover	TPEE (UL94V-0), black
O-ring	Rubber

Dimensions

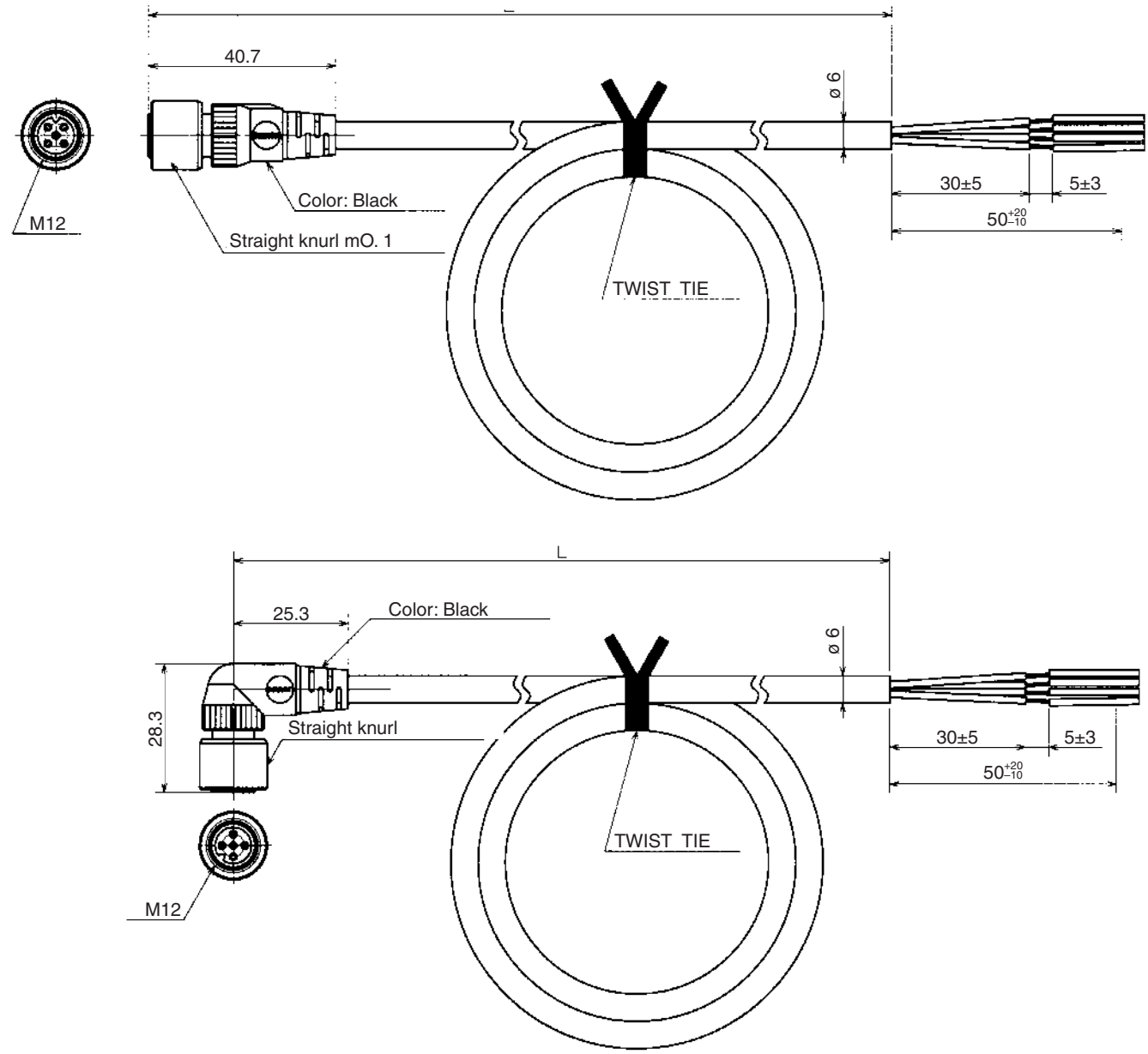

Wiring Diagram (M12)

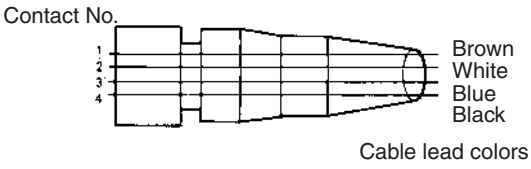

Twist & click (M12)

XS5F

Ordering information

Type	Size	Material		Features	Shape	Length (m)	Order code
		Nut	Cable				
Twist & Click	M12	Brass	PVC	For standard 4 pin or Omron Smartclick connectors	Angled	2	XS5F-D422-D80-A
						5	XS5F-D422-G80-A
					Straight	2	XS5F-D421-D80-A
						5	XS5F-D421-G80-A

Note: The XS5F connectors can be attached to standard M12 plug connectors (screw-fix) and to XS5 plug connectors (twist & click). For details on the twist & click locking mechanism refer to XS5 data sheet.

Specifications

Rated current	4A
Rated voltage	125 VDC, 250 VAC
Degree of protection	IP67 (IEC 60529)
Ambient temperature	-25°C to 70°C

Pin arrangement

M12 4 poles	
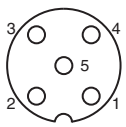	1 = brown 2 = white 3 = blue 4 = black 5 = n.c.

Materials

Pin block	PBT resin (UL94V-0)
Contacts	Phosphor bronze/nickel base, 0.4 µm gold plating
Fixture	Zinc alloy/nickel plated
Cover	Polyester elastomer (UL94V-0)
O-ring	Rubber

Dimensions

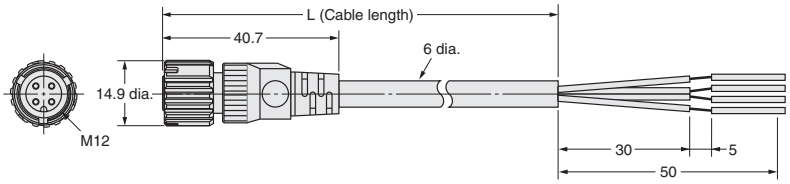

Confectionable plugs and connectors (self-assembly)

XS2C, XS2G, Y92E-_-conf

Ordering information

Type	Size	Material Nut	Features		Shape	Order code
Plug (male)	M8	Polyester elastomer	3 pin		straight	Y92E-MM08PVC3Sconf-L
			4 pin			Y92E-MM08PVC4Sconf-L
	M12		4 pin	crimp	straight	XS2G-D4C3
				solder		XS2G-D423
				solder	angled	XS2G-D424
			5 pin	screw fix	straight	XS2G-D5S1
					angled	XS2G-D5S2
			4 pin twist & click (for 4-5mm cables)	screw fix	straight	XS2G-D4S3
					angled	XS2G-D4S4
Connector (female)	M8		3 pin		straight	Y92E-M08PVC3Sconf-L
			4 pin			Y92E-M08PVC4Sconf-L
	M12		4 pin	crimp	straight	XS2C-D4C3
				solder		XS2C-D423
				crimp	angled	XS2C-D4C4
				solder		XS2C-D424
			5 pin	screw fix	straight	XS2C-D5S1
					angled	XS2C-D5S2

Specifications

	Y92E	XS2G, XS2C
Rated current	4 A	
Rated voltage	36 VDC	125 VDC, 250 VAC
Degree of protection	IP67 (IEC60529)	
Ambient temperature	-25°C to 70°C	

Pin arrangement

M8		M12			
Plug	Connectors	Plug		Connectors	
4 pin	4 pin	4 pin	5 pin	4 pin	5 pin
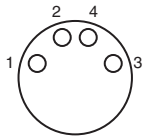	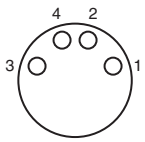	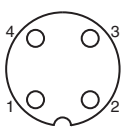	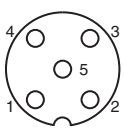	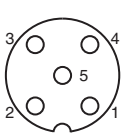	

4 pin: 1 = brown, 2 = white, 3 = blue, 4 = black, 5 = n.c.

5 pin: 1 = brown, 2 = white, 3 = blue, 4 = black, 5 = green / yellow

Materials

	Y92E	XS2G, XS2C
Pin block	PVC	PBT resin (UL94V-0)
Contacts	CuSn, nickel base, 0.3 µm gold plating	Brass/nickel base, 0.4 µm gold plating
Fixture		Brass/nickel base
Cover	PVC	PBT resin (UL94V-0)
O-ring	FKM	Rubber

Dimensions

Plugs (male)

XS2G-D4C□ (Crimping Model, Straight), XS2G-D42□ (Soldering Model, Straight)

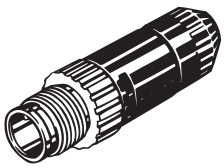

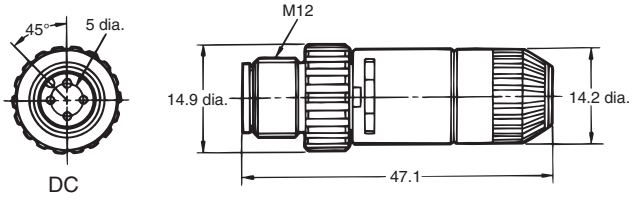

XS2G-D5S1 (Screw-on model, Straight)

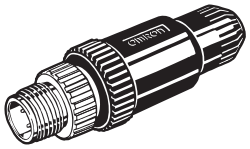

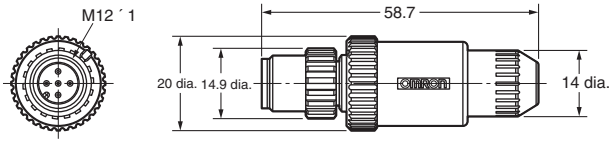

XS2G-D42□ (Soldering Model, L-shaped)

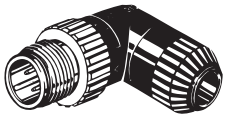

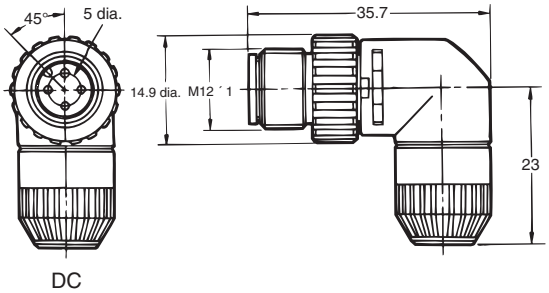

XS2G-D5S2 (Screw-on model, angled)

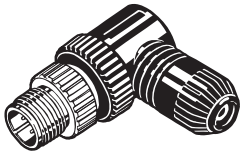

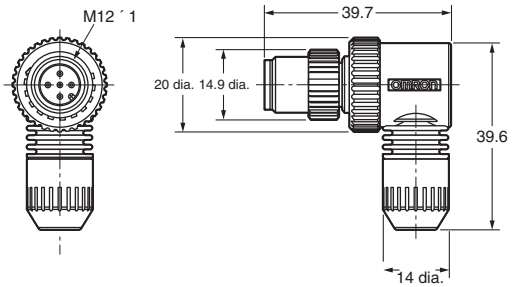

Connectors (female)

XS2C-D4C□ (Crimping Model, Straight), XS2C-D42□ (Soldering Model, Straight)

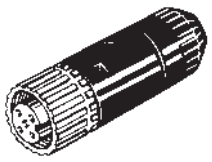

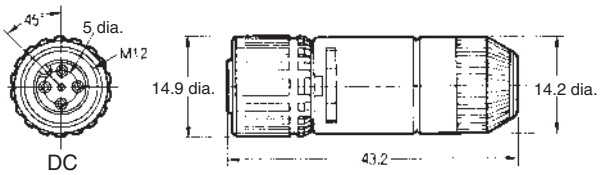

XS2C-D5S1 (Screw-on model, straight)

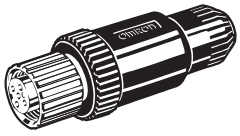

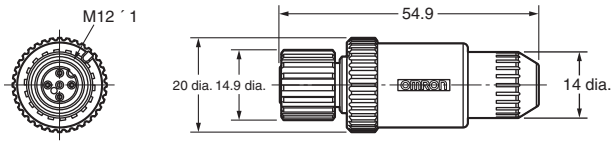

XS2C-D4C□ (Crimping Model, L-shaped)
XS2C-D42□ (Soldering Model, L-shaped)

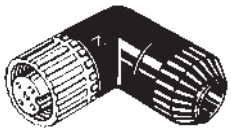

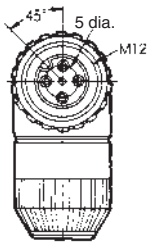

DC

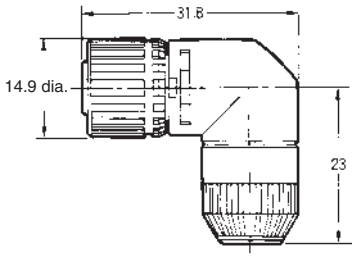

XS2C-D5S2 (Screw-on model, angled)

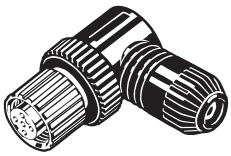

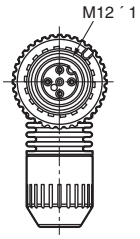

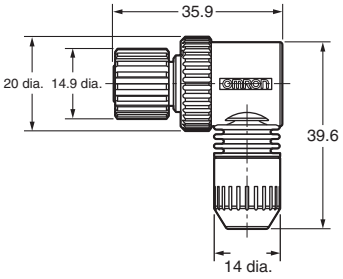

Field I/0 boxes

XW3B, XW3D, DRT2

Ordering information

Type	Nr of inputs/ outputs	Output configuration	Connection	Order code
Direct wiring	4 x M12 inputs	PNP[*1]	5m pre-wired	XW3B-P453-G11
	6 x M12 inputs			XW3B-P653-G11
	8 x M12 inputs			XW3B-P853-G11
Direct wiring with M12 Twist&click	4 x M12 with smartclick inputs	PNP[*1]	5m pre-wired	XW3D-P453-G11[*2]
	8 x M12 with smartclick inputs			XW3D-P853-G11[*2]
DeviceNet	4 x M12 inputs	PNP[*1]	M12 (M12 DeviceNet cables are available)	DRT2-ID04CL-1
	8 x M12 inputs			DRT2-ID08CL-1[*3]
	16 x M12 inputs			DRT2-HD16CL-1[*3]
	8 x M12 inputs + 8 x M12 outputs			DRT2-MD16CL-1

[*1] NPN types are available on request
[*2] For details refer to Omron XS5 product information
[*3] Separate power supply. Models with power supply via DeviceNet cable are available

Specifications

	XW3B/XW3D	DRT2
Rated current	4 A/port (signal lines) 12 A/box (power lines)	6 mA input 0.5 A per point (output)
Rated voltage	10 to 30 VDC	24 VDC
Degree of protection	IP67 (IEC 60529)	
Operating temperature	-25°C to 70°C	-10°C to 55°C

Note: For details and dimensions refer to separate datasheet or www.industrial.omron.eu

Fiber amplifier connectors

E3X-CN

Ordering information

Type	Size	Features	Order code
Fiber amplifier connector	Special connector 17,8x10x15,1	4 wire; 2 m PVC cable	E3X-CN21
		3 wire; 2 m PVC cable	E3X-CN11
		2 wire slave cable; 2 m PVC	E3X-CN22*1
		1 wire slave cable; 2 m PVC	E3X-CN12*1
		M8 4-pin plug with 30 cm PVC cable	E3X-CN21-M3J-2 0.3M
		M12 4-pin plug with 30 cm PVC cable	E3X-CN21-M1J 0.3M

*1 Slave connectors can be used to reduce wiring effort. The setup requires 1 master amplifier with the slave amplifiers directly mounted attached. The power supply is then provided by the master amplifier via the clipped on slave connectors. For 4-wire masters use 2-wire slaves and for 3-wire masters 1-wire slaves.

Specifications

Rated current	2.5 A
Rated voltage	50V
Degree of protection	IP50 (EC 60529)
Ambient temperature	Groups of 1 or 2 amplifiers: -25 to 55°C
	Groups of 3 to 10 amplifiers: -25 to 50°C
	Groups of 11 to 16 amplifiers: -25 to 45°C

Materials

Housing	Polybuthylene terephthalate (PBT)
Contacts	Phosphor bronze/ gold plated/ nickel

Pin arrangement

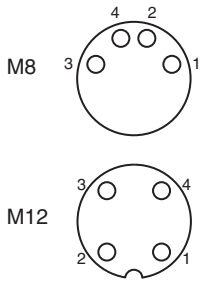

Connector	Cable colour	
1	brown	+
2	orange/white	Output 2 or ext. input
3	blue	–
4	black	Output 1
	pink	Ext. Input

Dimensions

Master connectors

E3X-CN21/E3X-CN11

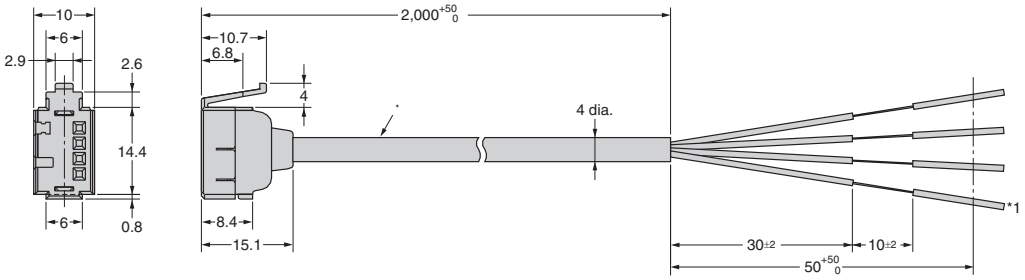

* E3X-CN21: 4-dia. vinyl-insulated round cable with 4 conductors (Conductor cross section: 0.2 mm², Insulator diameter: 1.1 mm)

*1 Only E3X-CN21

Slave connectors

E3X-CN22/E3X-CN12

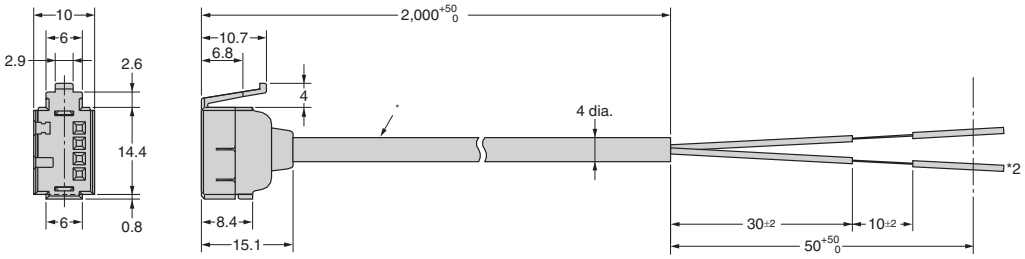

* E3X-CN21: 4-dia. vinyl-insulated round cable with 4 conductors (Conductor cross section: 0.2 mm², Insulator diameter: 1.1 mm)

*2 Only E3X-CN22

Photomicrosensor connectors

EE-1

Ordering information

Type	Size	Features	Applicable sensors	Ordercode
Pin connector for soldering	13x4x10.8	For dark on	EE-SX47/67	EE-1001
		For light on		EE-1001-1
Cable connector	13x4x13.5	standard cable		EE-1010 2M
		robotic cable		EE-1010-R 2M
	10x5.8x8	standard cable	EE-SX97	EE-1017 1M
		robotic cable		EE-1017-R 1M
Cable connector for EE-SX91 pigtail versions	10x5.8x8	robotic cable	EE-SX91	EE-1016-R

Specifications

Rated voltage	5 to 24 VDC
Degree of protection	IP50 (IEC 60529)
Ambient temperature range	operating: -25 to 55°C
	storage: -30 to 80°C

Material

	EE-1001	EE-1010/EE-1016	EE-1017
Housing	Nylon		
Contacts	Phosphor bronze		
Cable	–	PVC 2 m	PVC 1 m (3 m are available on request)

Pin arrangement

	EE-1001, EE-1010		EE-1016		EE-1017	
1	+	Brown	+	Brown	+	Brown
2	L	Pink	output 2	White	1	Black
3	out	Black	–	Blue	2	White
4	–	Blue	output 1	Black	–	Blue

Note: For the connector EE-1001-1 the pins 1(+) and 2 (L) are short circuited

Dimensions

Connector
EE-1001

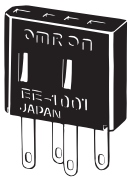

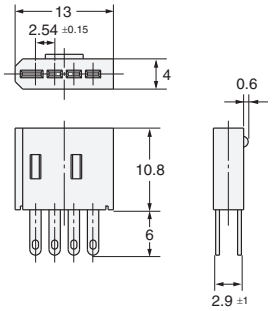

Connector
(short-circuited between positive (+) and L terminals)
EE-1001-1

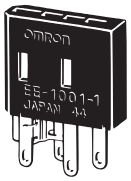

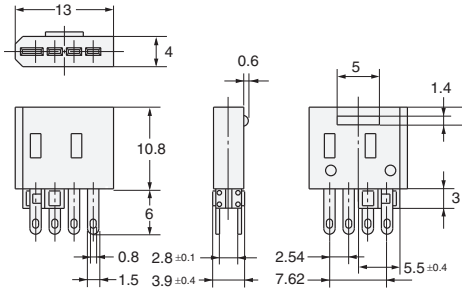

Connector with Cable
EE-1010

Connector with Robot Cable
EE-1010-R

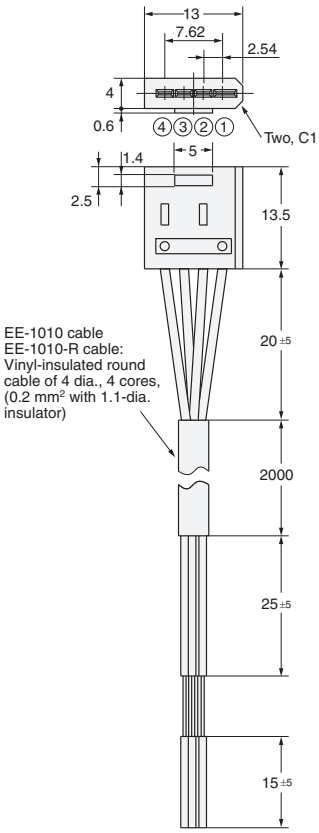

Connector with Robot Cable
EE-1016-R

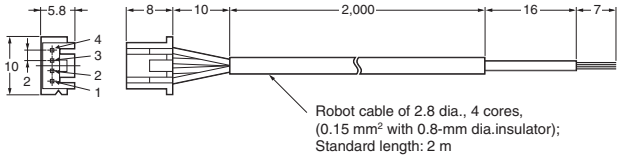

Connector with Robot Cable
EE-1017-R

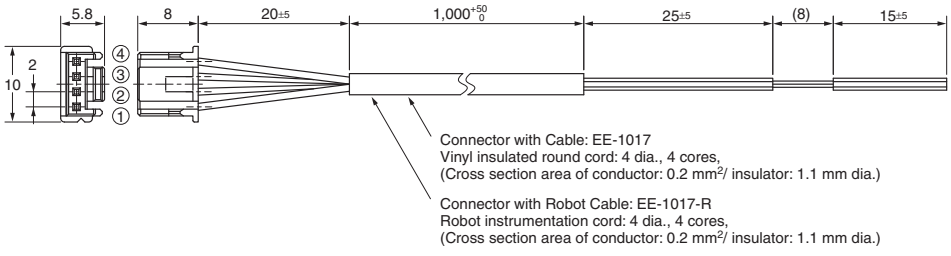

T-connectors, Covers, Accessories, extended wiring portfolio

XS2

Name	Model		Appearance
Cable connectors with plugs (open end or connector end)	XS2W Plug connectors (Connector end)		
	XS2H Plug connectors (Open end)		
Connector Assembly Accessories (Crimping, Soldering, or Screw-on)	XS2F Crimp Tool (for Crimping Connectors)		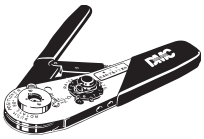
	XS2U Crimping pin (for XS2G/XS2C)		
	XW4Z Screwdriver (for Screw-on Connectors)		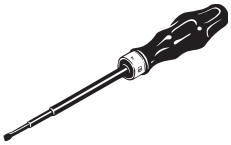
Panel-mounting Connectors	XS2P Sockets (M12) XS3P Sockets (M8)		
	XS2M Plugs (M12) XS3M Plugs (M8)	Flange-mounting Plugs	
		Screw-mounting Plugs	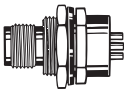
T-Joints and Y-Joints Used for branching and for daisy-chain connections.	XS2R T-Joint/Y-Joint Plug/Socket Connectors (M12) XS3R Y-Joint Plug/Socket Connectors (M8)	T-Joints	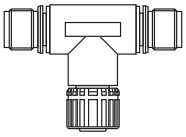
		Y-Joints	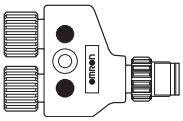
Dust covers Used to protect unused connector ports	XS2Z (M12) XS3Z (M8)	Connector plugs	
		Connector covers	

Note: For details on these products, contact your Omron representative

Mounting accessories for standard photoelectric, inductive and capacitive sensors

E39, Y92E

Mounting brackets and covers

For cylindrical shapes

Shape	Product group	Type	Housing material	Features	Applicable sensors	Order code
	Mounting brackets	general purpose - screw fix	plastic	- cost efficient mounting bracket - for M8, M12, M18, M30 - surface mounting	-E3F2 -E2A	Y92E-B8 Y92E-B12 Y92E-B18 Y92E-B30
		general purpose - snap fix	stainless steel	- for dia 20 mm	-E3FZ (snap mount)	E39-EL8
		general purpose - screw fix		- for M18	-E3FZ (mounting with M18 nuts) -E3F2	E39-EL12
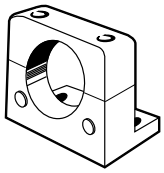			plastic	- for dia 34 mm	-E2K-C	Y92E-A34
		quick access - snap fix		- snap fix for quick sensor access - for M8, M12, M18, M30 - surface mounting	-E3F2 (metal housing) -E2A (metal housing)	Y92E-BC8 Y92E-BC12 Y92E-BC18 Y92E-BC30
		quick access - clamp fix	stainless steel	- clamp fix for quick sensor access with exact repositioning - for M8, M12, M18, M30 - through mounting		Y92E-G8 Y92E-G12 Y92E-G18 Y92E-G30

Shape	Product group	Type	Housing material	Features	Applicable sensors	Order code
	Protective covers	general purpose sensor head protection	polyarylate	- for M8, M12, M18, M30 - for shielded and unshielded	-E2A	Y92E-E8 Y92E-E12 Y92E-E18 Y92E-E30
		sputter protection for sensor head	silicone rubber	- increased protection in weld fields - for M12, M18, M30 - for shielded sensors		Y92E-E12-2 Y92E-E18-2 Y92E-E30-2
		general purpose lens protection	metal rim with glas cover		E3F2	E39-F31

For square shapes

Shape	Type	Housing material	Features	Mounting type	Applicable Sensors	Order code
	General purpose mounting	Stainless steel (SUS 304)	inclination angle adjustment	side wall mounting	E3Z	E39-L43
				back wall mounting		E39-L44
			horizontal and inclination angle adjustment	surface mounting		E39-L104
			up/down position adjustment	back wall mounting	E3T-S	E39-L117
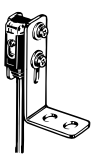				surface mounting		E39-L116

Shape	Type	Housing material	Features	Mounting type	Applicable Sensors	Order code
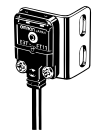	General purpose mounting	Stainless steel (SUS 304)	up/down position adjustment	back wall mounting	E3T-F	E39-L119
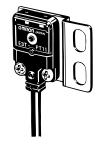				side wall mounting		E39-L120
			inclination angle adjustment	back wall mounting	E3G-R	E39-L132
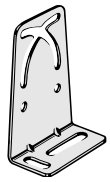				side and back wall mounting		E39-L131
				surface mounting	E3G-L	-E39-L139 -E39-L140

Shape	Type	Housing material	Features	Mounting type	Applicable Sensors	Order code
	General purpose mounting	Stainless steel (SUS 304)	3D rotation	surface, side and backwall mounting	E3G, E3Z	E39-EL4
					E3T, E3Z, E3C	E39-EL5
						E39-EL6
	Side protection		inclination angle adjustment	protective side wall mounting	E3T-S	E39-L118

Shape	Type	Housing material	Features	Mounting type	Applicable Sensors	Order code
	Full protection	Stainless steel (SUS 304)	inclination angle adjustment	protective side wall mounting	E3Z (pre-wired types)	E39-L142
			horizontal angle adjustment	protective surface mounting		E39-L144
					-E3Z	E39-L98
	Telescope mounting		- 360° horizontal rotation - max telescope length	side and back wall mounting	-E3Z -E39-R3	-E39-L150 -E39-L151
			3D rotation around x, y, and z-axis	side wall, back wall and surface mounting		E39-L93FH E39-L93FV
			Extension pipe with XY joint	pipe mounting	E39-L93_	E39-L93XY
			Reflector adapter for E39-L93_	telescope mounting	-E39-R1 -E39-R1S	E39-L96

Slit, filters and other accessories

Shape	Type	Features	Mounting type	Applicable Sensors	Order code
	Precision detection slit cover	- slit width from dia 0.5 mm for min object size detection of dia 0.2 mm	snap on	E3Z-T	E39-S65
				E3T-□T	-E39-S63 -E39-S64
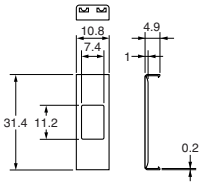	Mutual interference prevention	polarizing filter for close mounting of multiple sensors through beam sensors		E3Z-T□A	E39-E11
	Adjustment aid	adjustment aid for sensitivity adjustment		E3T-ST1	E39-E10
				photo electric sensors with adjustable potentiometers	E39-G2

Dimensions

E39-L43

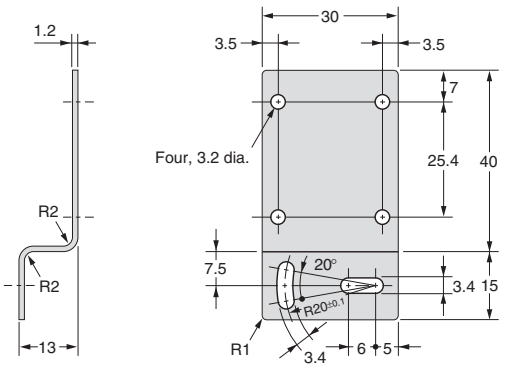

E39-L44

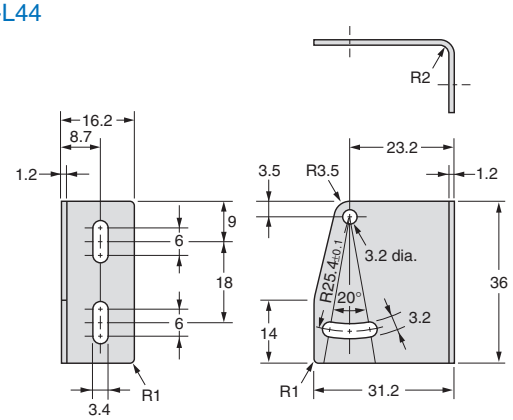

E39-L87

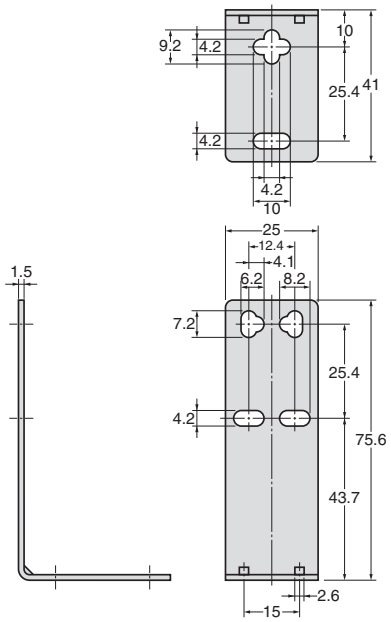

E39-L93FH

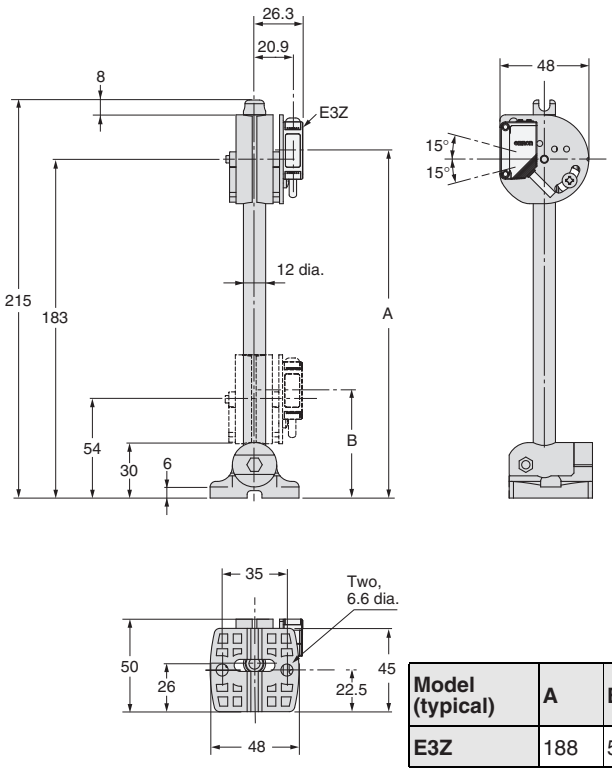

Model (typical)	A	B
E3Z	188	59

E39-L93FV

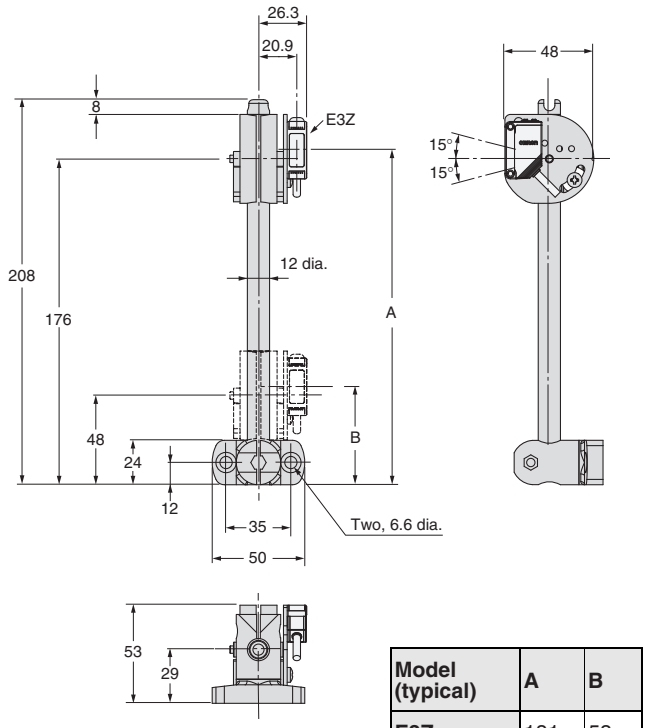

Model (typical)	A	B
E3Z	181	53

E39-L93XY

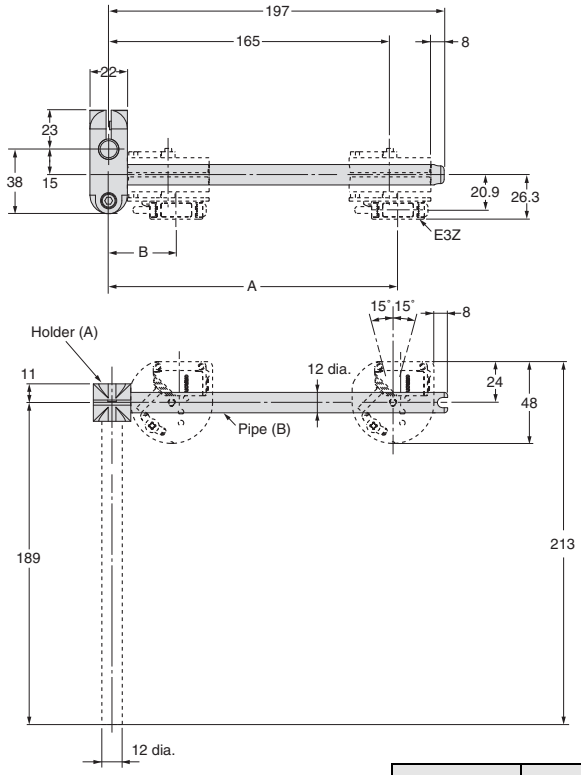

Note: The E39-L93XY consists of only the one joint holder (A) and pipe (B), and the two hexagonal bolts and nuts. It cannot be mounted to the Sensor alone.

Model (typical)	A	B
E3Z	170	40

E39-L96

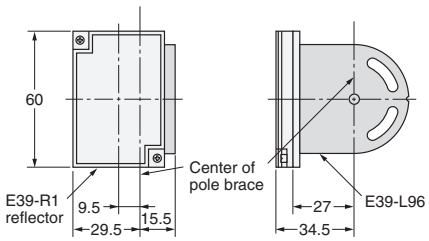

E39-L98 (Vertical)

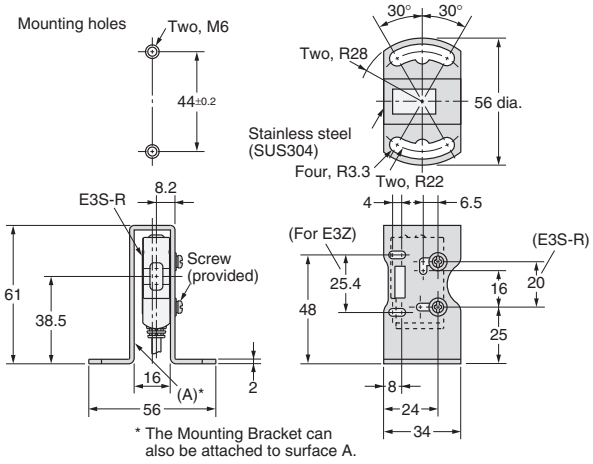

* The Mounting Bracket can also be attached to surface A.

E39-L104

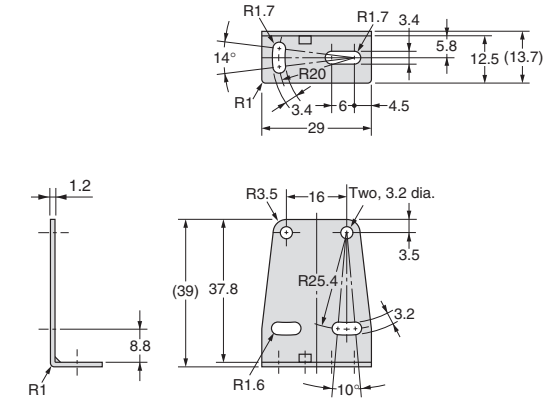

E39-L116

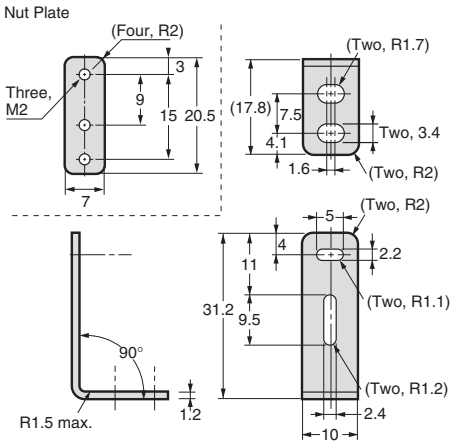

E39-L117

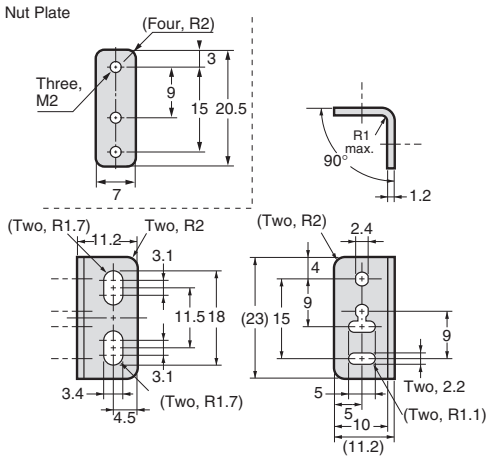

E39-L119

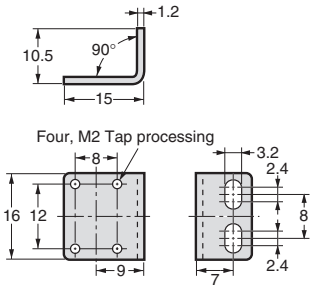

E39-L120

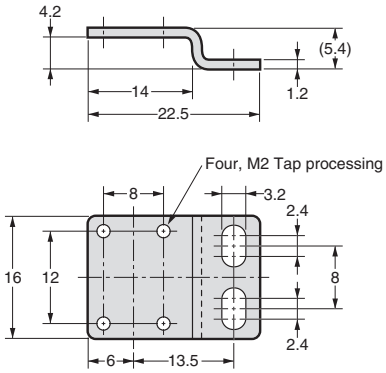

E39-L131

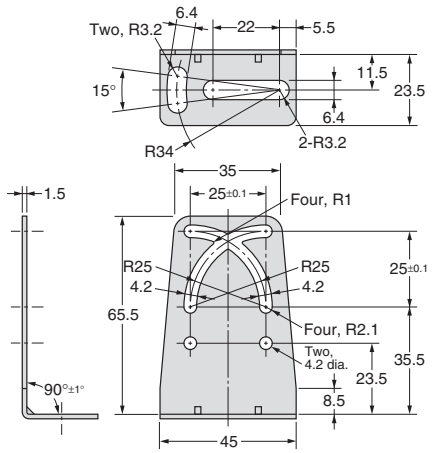

E39-L132

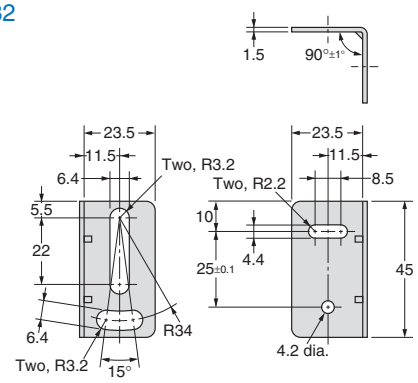

E39-L142

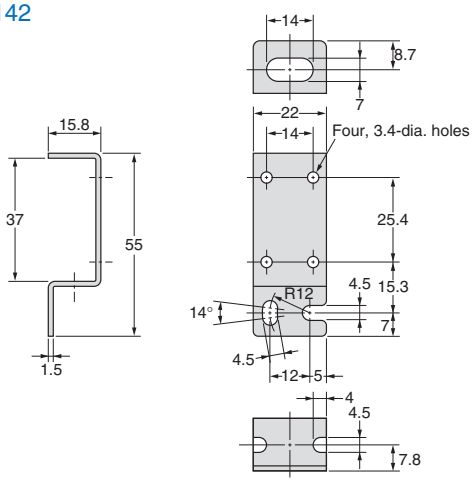

E39-L144

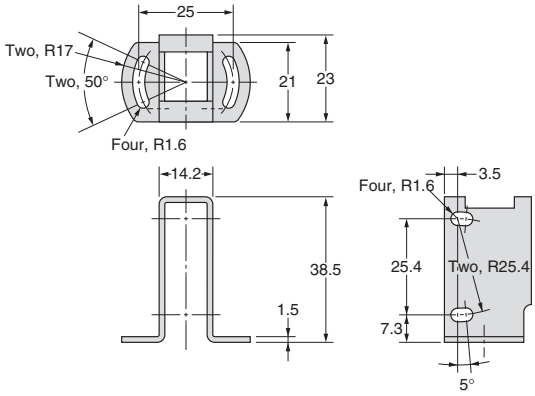

E39-L150 (Vertical)
E39-L151 (Vertical)

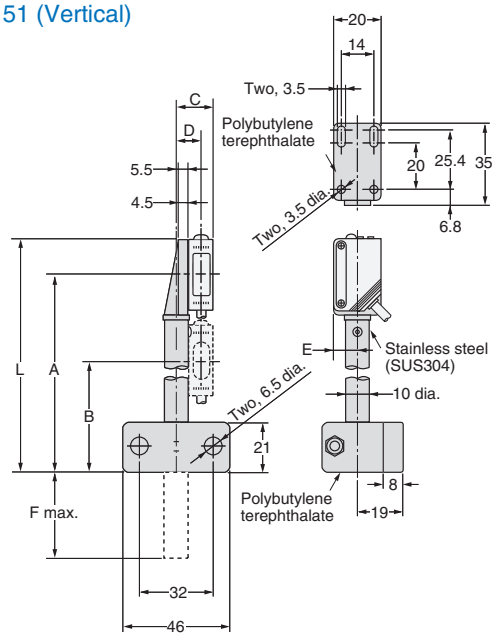

E39-L150

Model (typical)	A	B	C	D	E	F
E3Z	84.5	47.5	16.3	10.9	10	37

Model	L
E39-L150	100
E39-L151	200

Reflectors for retro-reflective photoelectric sensors

E39-R

Accessories

Shape	Type	Housing material	Features	Size in mm	Applicable Sensor	Order code
	General purpose reflectors	ABS base Acrylic surface	Surface screw mounting (diagonal holes)	40x60x7.5	Retro-reflective photoelectric sensors – without M.S.R Retro-reflective photoelectric sensors – with M.S.R.[*1]	E39-R1S
			Surface screw mounting (holes on one side only)	35.4x42.3x8		E39-R9
				51.4x60.3x8.5		E39-R42
	Small size		Side screw mounting or surface selfadhesive	41.8x22.5x11		E39-R3
			Surface screw mounting	23x13.7x4.9		E39-R4
	Large size			100x100x9		E39-R8
				84.5x84.5x8.7		E39-R40

[*1] Mirror Surface Rejection (MSR) is realized by using polarization filters

Shape	Type	Housing material	Features	Size in mm	Applicable Sensor	Order code
	High precision	ABS base Acrylic surface	Microtripel for improved performance with fine beam sensors	52x40x4.8	Recommended for fine beam coaxial models (E3C-LR, E3Z-LR, E3T-SR4)	E39-R6
				30x45		E39-R12
				14x23x1		E39-R37-CA
				12x24		E39-R13
	Simple mounting	ABS base Acrylic surface	Round shape with centered mounting hole for simple screw mounting	Diameter: 84 Depth: 7.4	Photoelectric sensors with and without M.S.R.[*1]	E39-R7
	Snap mounting		Snap mounting for fast installation	Diameter: 30 Diameter of snap mount tool: 5	Recommended for snap mounting sensor E3FZ	E39-R49
	Enhanced detergent resistance	PVC	Surface screw mounting IP69k after DIN 40050 part 9	40x60x7.5	Recommended for harsh environment sensors	E39-R50
				20x60x6		E39-R51
	Highest detergent resistance	SUS316L Borosilicat	Surface screw mounting	43x30x5		E39-R16
	Heat resistant	Borosilicat	Surface screw mounting 450°C heat resistance Suitable for vacuum environment	95x51x8		E39-R47
	Non-fogging reflector	ABS Acrylic surface	Anti-fogging coating	40x60x7.5		E39-R1K

[*1] Mirror Surface Rejection (MSR) is realized by using polarization filters

Shape	Type	Housing material	Features	Size in mm	Applicable Sensor	Order code
	Special polarizing	ABS base PMMA surface	Special polarizing filter to PET	40x80x8.5	E3ZM-B	E39-RP1
	General purpose tape reflectors	Acrylic	Self adhesive Pre cut	35x10x0.7	Photoelectric sensors with and without M.S.R.[*1]	E39-RS1
					Optimised for E3T-SR4	E39-RS1-CA
				40x35x0.7		E39-RS2
					Optimised for E3T-SR4	E39-RS2-CA
				80x70x0.6		E39-RS3
					Optimised for E3T-SR4	E39-RS3-CA
			Self adhesive Self cut/roll material	25 mm x 5 m		E39-RS25 5 m
				25 mm x 22.8 m		E39-RS25 22.8 m
				50 mm x 5 m		E39-RS50 5 m
				50 mm x 22.8 m		E39-RS50 22.8 m
	High precision tape reflectors		Self adhesive Pre cut	195x22	Recommended for fine beam and laser sensors (E3Z-LR, E3C, E3X)	E39-RS4
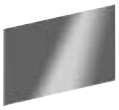				108x46		E39-RS5

[*1] Mirror Surface Rejection (MSR) is realized by using polarization filters

Dimensions

E39-R1S
E39-R1K *

Material, reflective
surface: acrylic
Rear surface: ABS

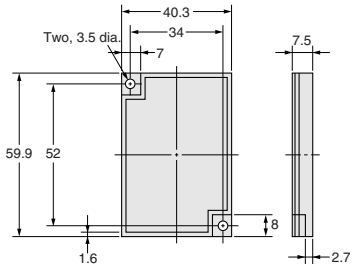

*E39-R1 only
Coating on reflective surface

E39-R9

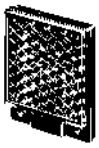

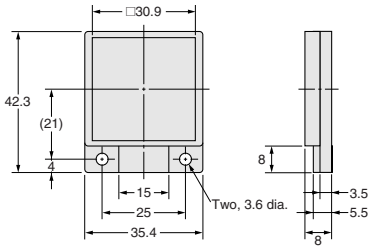

Material, reflective surface: acrylic
Rear surface: ABS

E39-R42

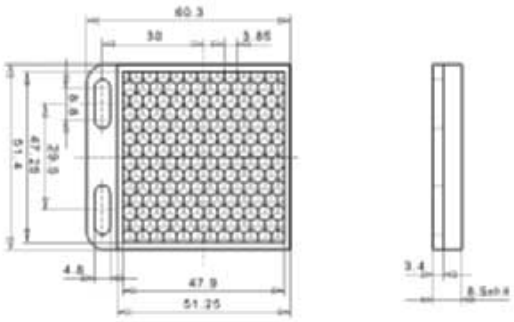

E39-R7

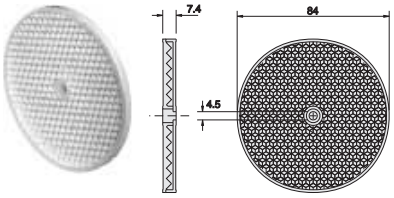

E39-R40

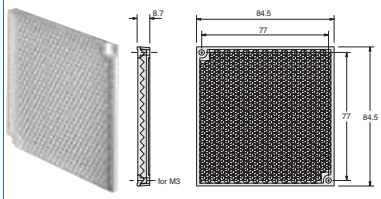

E39-R8

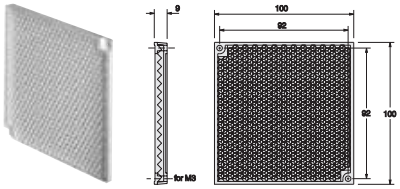

E39-R3

Material, reflective
surface: acrylic
Rear surface: ABS

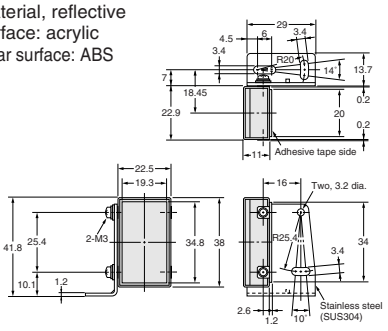

E39-R4

Material:
Reflective surface:
acrylic
Rear surface: ABS

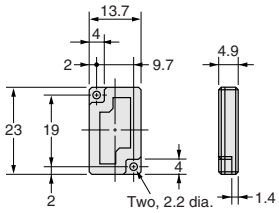

E39-R37-CA

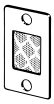

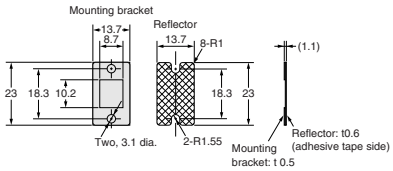

Material:
Mounting plate: stainless steel (SUS301)
Reflective surface: acrylic

Note: The reflective plate and mounting plate (1) come as a set.

E39-R6

Material, reflective
surface: acrylic
Rear surface: ABS

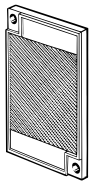

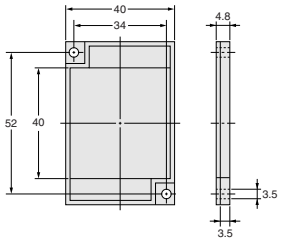

E39-R12/-R14

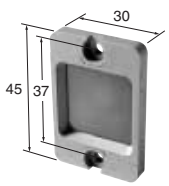

E39-R13

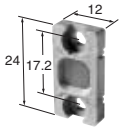

E39-RP1

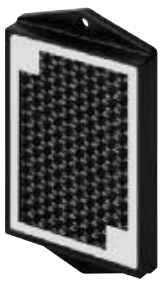

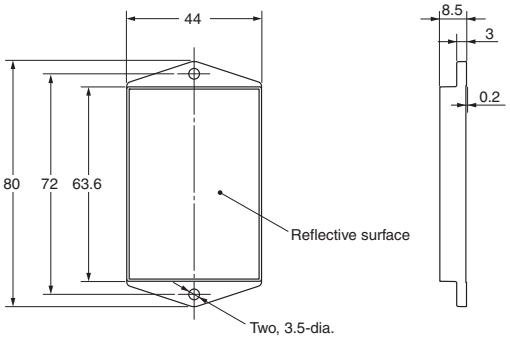

Cat. No. E26E-EN2-04 **In the interest of product improvement, specifications are subject to change without notice.**

OMRON EUROPE B.V.

Wegalaan 67-69,
NL-2132 JD, Hoofddorp,
The Netherlands
Phone: +31 23 568 13 00
Fax: +31 23 568 13 88
www.eu.omron.com

Общество с ограниченной ответственностью «МосЧип» ИНН 7719860671 / КПП 771901001
Адрес: 105318, г.Москва, ул.Щербаковская д.3, офис 1107

Данный компонент на территории Российской Федерации

Вы можете приобрести в компании MosChip.

Для оперативного оформления запроса Вам необходимо перейти по данной ссылке:

http://moschip.ru/get-element

Вы можете разместить у нас заказ для любого Вашего проекта, будь то серийное производство или разработка единичного прибора.

В нашем ассортименте представлены ведущие мировые производители активных и пассивных электронных компонентов.

Нашей специализацией является поставка электронной компонентной базы двойного назначения, продукции таких производителей как XILINX, Intel (ex.ALTERA), Vicor, Microchip, Texas Instruments, Analog Devices, Mini-Circuits, Amphenol, Glenair.

Сотрудничество с глобальными дистрибьюторами электронных компонентов, предоставляет возможность заказывать и получать с международных складов практически любой перечень компонентов в оптимальные для Вас сроки.

На всех этапах разработки и производства наши партнеры могут получить квалифицированную поддержку опытных инженеров.

Система менеджмента качества компании отвечает требованиям в соответствии с ГОСТ Р ИСО 9001, ГОСТ РВ 0015-002 и ЭС РД 009

Офис по работе с юридическими лицами:

105318, г.Москва, ул.Щербаковская д.3, офис 1107, 1118, ДЦ «Щербаковский»

Телефон: +7 495 668-12-70 (многоканальный)

Факс: +7 495 668-12-70 (доб.304)

E-mail: info@moschip.ru

Skype отдела продаж:
moschip.ru
moschip.ru_4
moschip.ru_6
moschip.ru_9