OMRON

Sensor connectors, reflectors, mounting brackets, accessories

# XS, Y92E, E39

The sensor accessory portfolio provides the products required to connect, mount or operate the main photoelectric and inductive sensors. The accessories are designed to match the performance levels of the respective sensors from general applications to the most challenging enviroments.

- Reflectors for standard applications, special mounting requirements or special environments
- M8, M12 cable connectors
- Special fiber and photomicrosensor connectors
- Mounting brackets for square and cylindrical sensor shapes

## Content


Cable connectors – quick guide and selection table . . . . . 2
Mounting accessories for standard photoelectric, inductive and capacitive sensors . . . . . 24
Reflectors for retro-reflective photoelectric sensors . . . . . 34

# Cable connectors – quick guide and selection table

| Size | Shape | Type | Features | Material | | Order code | | Extended Portfolio and Specs on Page |
|---|---|---|---|---|---|---|---|---|
| | | | | Nut | Cable | | | |
| M8 | | **General purpose (screw)** | 3 pin (LED optionally) | Brass (CuZn) | PVC 2 m<br>PUR 2 m | XS3F-M8PVC3S2M<br>XS3F-M8PUR3S2M | XS3F-M8PVC3A2M<br>XS3F-M8PUR3A2M | 3 |
| | | | 4pin | | PVC 2 m<br>PUR 2 m | XS3F-M8PVC4S2M<br>XS3F-M8PUR4S2M | XS3F-M8PVC4A2M<br>XS3F-M8PUR4A2M | 3 |
| | | **Detergent resistant** | 4 pin | Stainless steel (SUS316L) | PVC 2 m | Y92E-S08PVC4S2M-L | Y92E-S08PVC4A2M-L | 6 |
| | | **Robotic** | 4 pin | Brass (CuZn) | Robotic PVC 2 m | XS3F-M421-402-R | XS3F-M422-402-R | 8 |
| M12 | | **General purpose (screw)** | 3 wire (LED optionally) | Brass (CuZn) | PVC 2 m<br>PUR 2 m | XS2F-M12PVC3S2M<br>XS2F-M12PUR3S2M | XS2F-M12PVC3A2M<br>XS2F-M12PUR3A2M | 3 |
| | | | 4 wire | | PVC 2 m<br>PUR 2 m | XS2F-M12PVC4S2M<br>XS2F-M12PUR4S2M | XS2F-M12PVC4A2M<br>XS2F-M12PUR4A2M | 3 |
| | | | 5 wire | | PVC 2 m<br>PUR 2 m | XS2F-M12PVC5S2M<br>XS2F-M12PUR5S2M | XS2F-M12PVC5A2M<br>XS2F-M12PUR5A2M | 3 |
| | | **Detergent resistant** | 4 wire | Stainless steel (SUS316L) | PVC 2 m | Y92E-S12PVC4S2M-L | Y92E-S12PVC4A2M-L | 6 |
| | | **105°C Heat resistant** | 4 wire | Stainless steel (SUS316L) | Heat resistant PVC 2 m | XS2F-E421-D80-E | XS2F-E422-D80-E | 12 |
| | | **Twist & click** | 4 wire | Nickel plated Zinc | PVC 2 m<br>PUR 2 m | XS5F-D421-D80-A<br>XS5F-D421-D80-P | XS5F-D422-D80-A<br>XS5F-D422-D80-P | 14 |
| | | **Robotic** | 4 wire | Brass (CuZn) | Robotic PVC 2 m | XS2F-D421-D80-R | XS2F-D422-D80-R | 8 |
| Fiber amplifier (E3X) connector | 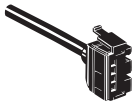 | **Fiber amplifier connectors** | Special fiber connector - 4 wire | PBT | PVC 2 m | E3X-CN21 | | 19 |
| | | | Special fiber connector + M8 plug | Plug: Zinc diecast | PVC 30 cm with M8 4-pin plug | E3X-CN21-M3J-2 0.3M | | 19 |
| | | | Special fiber connector + M12 plug | | PVC 30 cm with M12 4-pin plug | E3X-CN21-M1J 0.3M | | 19 |
| Photo-micro-sensor (EE-SX) connector Cable connector | | **Cable connector** | standard cable | Nylon | PVC 1 m | EE-1017 1M | | 21 |
| | | | robotic cable | | | EE-1017-R 1M | | 21 |
| M8/M12 | | **Confection-able** | Plugs and connectors for self assembly | Brass | n.a. | XS2G, XS2C<br>Y92E_conf | | 15 |
| M12 | | **Field I/0 boxes** | Direct wiring or DeviceNet communi-cation | - | | XW3B, DRT2 | | 18 |
| M8/M12 | | **T-connectors, covers, accessories and extended wiring portfolio** | n.a. | - | | XS2R, XS3R, XY2F, .. | | 23 |

General purpose connectors (M8/M12)

# XS3F, XS2F

## Ordering information

| Type | Size | Material | | Features | Shape | Length (m) | Order code |
|---|---|---|---|---|---|---|---|
| | | Nut | Cable | | | | |
| General purpose | M8 | Brass (Nickel plated) | PVC | 3 pin | angled | 2 | XS3F-M8PVC3A2M |
| | | | | | | 5 | XS3F-M8PVC3A5M |
| | | | | | straight | 2 | XS3F-M8PVC3S2M |
| | | | | | | 5 | XS3F-M8PVC3S5M |
| | | | | 4 pin | angled | 2 | XS3F-M8PVC4A2M |
| | | | | | | 5 | XS3F-M8PVC4A5M |
| | | | | | straight | 2 | XS3F-M8PVC4S2M |
| | | | | | | 5 | XS3F-M8PVC4S5M |
| | M12 | | | 3 wire | angled | 2 | XS2F-M12PVC3A2M |
| | | | | | | 5 | XS2F-M12PVC3A5M |
| | | | | | straight | 2 | XS2F-M12PVC3S2M |
| | | | | | | 5 | XS2F-M12PVC3S5M |
| | | | | 4 wire | angled | 2 | XS2F-M12PVC4A2M |
| | | | | | | 5 | XS2F-M12PVC4A5M |
| | | | | | straight | 2 | XS2F-M12PVC4S2M |
| | | | | | | 5 | XS2F-M12PVC4S5M |
| | | | | 5 wire | angled | 2 | XS2F-M12PVC5A2M |
| | | | | | | 5 | XS2F-M12PVC5A5M |
| | | | | | straight | 2 | XS2F-M12PVC5S2M |
| | | | | | | 5 | XS2F-M12PVC5S5M |
| | M8 | | PUR | 3 pin | angled | 2 | XS3F-M8PUR3A2M |
| | | | | | | 5 | XS3F-M8PUR3A5M |
| | | | | | straight | 2 | XS3F-M8PUR3S2M |
| | | | | | | 5 | XS3F-M8PUR3S5M |
| | | | | 4 pin | angled | 2 | XS3F-M8PUR4A2M |
| | | | | | | 5 | XS3F-M8PUR4A5M |
| | | | | | straight | 2 | XS3F-M8PUR4S2M |
| | | | | | | 5 | XS3F-M8PUR4S5M |
| | M12 | | | 3 wire | angled | 2 | XS2F-M12PUR3A2M |
| | | | | | | 5 | XS2F-M12PUR3A5M |
| | | | | | straight | 2 | XS2F-M12PUR3S2M |
| | | | | | | 5 | XS2F-M12PUR3S5M |
| | | | | 4 wire | angled | 2 | XS2F-M12PUR4A2M |
| | | | | | | 5 | XS2F-M12PUR4A5M |
| | | | | | straight | 2 | XS2F-M12PUR4S2M |
| | | | | | | 5 | XS2F-M12PUR4S5M |
| | | | | 5 wire | angled | 2 | XS2F-M12PUR5A2M |
| | | | | | | 5 | XS2F-M12PUR5A5M |
| | | | | | straight | 2 | XS2F-M12PUR5S2M |
| | | | | | | 5 | XS2F-M12PUR5S5M |

Note: M12 2-wire models are available for AC and DC applications.
Contact your Omron representative

## Specifications

| | | M8 | M12 |
|---|---|---|---|
| **Rated current** | | 1 A | 4 A |
| **Rated voltage** | | 125 VDC | 125 VDC, 250 VAC |
| **Degree of protection** | | IP67 (IEC 60529) | |
| **Ambient temperature** | **PUR** | Fixed cable: -50°C to 80°C<br>Moving cable: -25°C to 80°C | |
| | **PVC** | -25°C to 70°C | |

### Pin arrangement

| M8 3 poles | M8 4 poles |
|---|---|
| 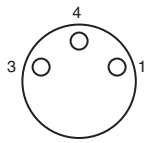 **1 = brown**<br>**3 = blue**<br>**4 = black** | 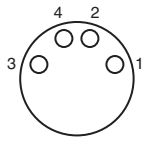 **1 = brown**<br>**2 = white**<br>**3 = blue**<br>**4 = black** |

| M12 3 poles | M12 4 poles | M12 5 poles |
|---|---|---|
| 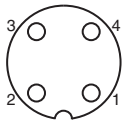 **1 = brown**<br>**2 = n.c.**<br>**3 = blue**<br>**4 = black** | 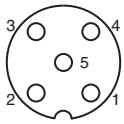 **1 = brown**<br>**2 = white**<br>**3 = blue**<br>**4 = black**<br>**5 = n.c.** | 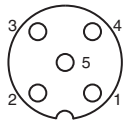 **1 = brown**<br>**2 = white**<br>**3 = blue**<br>**4 = black**<br>**5 = green / yellow** |

### Materials

| | |
|---|---|
| **Pin block** | PBT resin (UL 94V-0) |
| **Contacts** | Brass/ nickel base, 0.4 µm gold plating |
| **Fixture** | Brass/ nickel plated |
| **Cover** | Polyester elastomer (UL 94V-O) |
| **O-ring** | Rubber |

## Dimensions

### XS3F

#### M8 Screw-on cable connectors

**Straight Connectors**

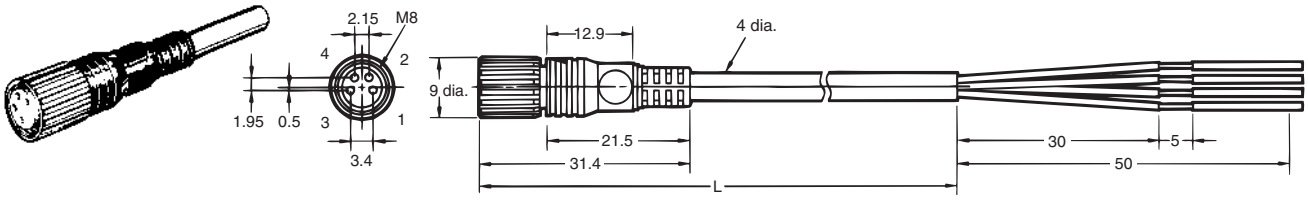


**L-shaped Connectors**

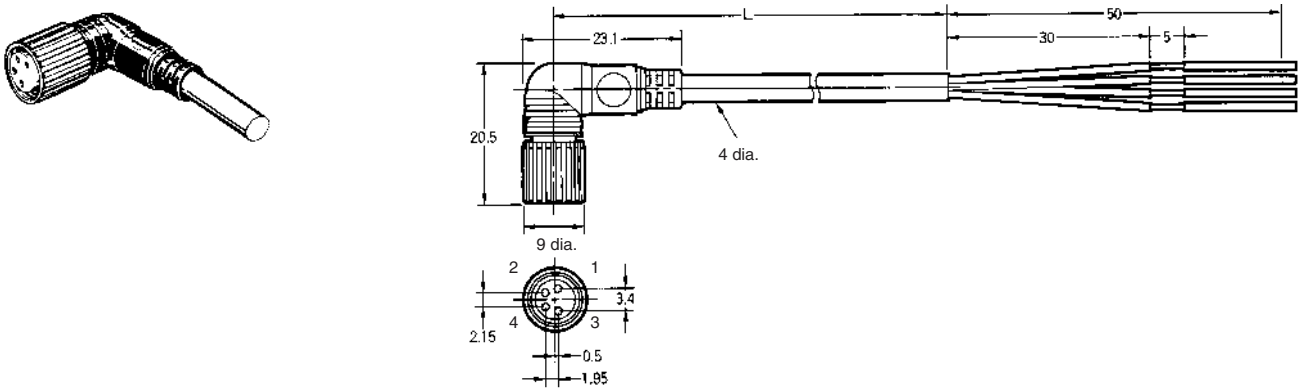

# XS2F

## M12 Screw-on cable connectors

**Straight Connectors**

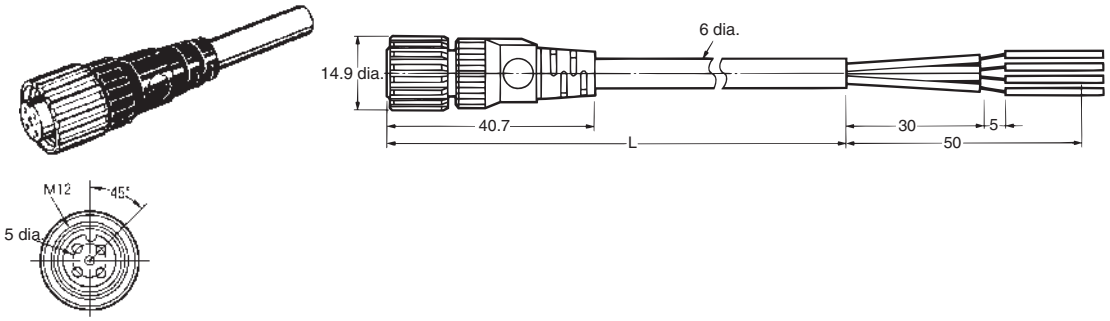


DC

**L-shaped Connectors**

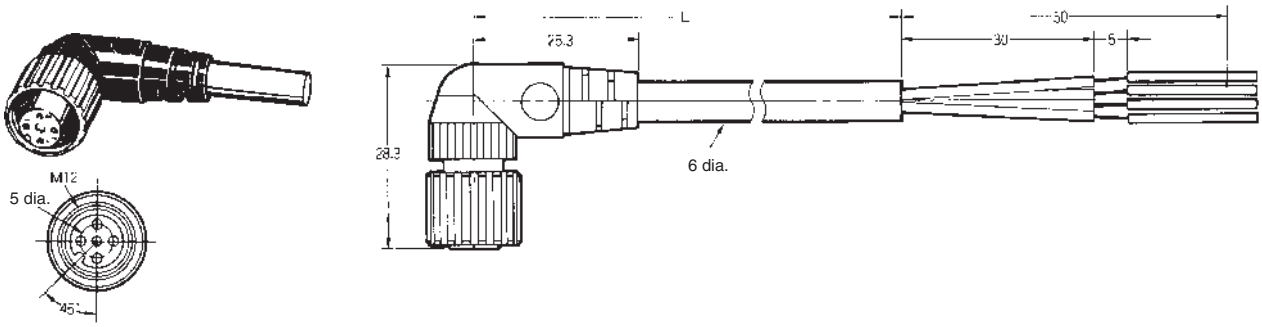


DC

## Wiring Diagram (M8 and M12)

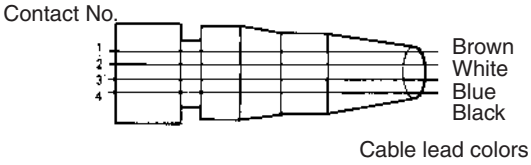

Detergent resistant cable connectors (M8 / M12)

# Y92E-S

## Ordering information

### Detergent resistant models

| Type | Size | Material | | Features | Shape | Length (m)[*1] | Order code |
|---|---|---|---|---|---|---|---|
| | | Nut | Cable | | | | |
| detergent resistant | M8 | SUS 316L | PVC | 3 pin | Angled | 2 | Y92E-S08PVC3A2M-L |
| | | | | | | 5 | Y92E-S08PVC3A5M-L |
| | | | | | Straight | 2 | Y92E-S08PVC3S2M-L |
| | | | | | | 5 | Y92E-S08PVC3S5M-L |
| | | | | 4 pin | Angled | 2 | Y92E-S08PVC4A2M-L |
| | | | | | | 5 | Y92E-S08PVC4A5M-L |
| | | | | | Straight | 2 | Y92E-S08PVC4S2M-L |
| | | | | | | 5 | Y92E-S08PVC4S5M-L |
| | M12 | | | | Angled | 2 | Y92E-S12PVC4A2M-L |
| | | | | | | 5 | Y92E-S12PVC4A5M-L |
| | | | | | Straight | 2 | Y92E-S12PVC4C2M-L |
| | | | | | | 5 | Y92E-S12PVC4S5M-L |

[*1] For different cable length please contact your Omron representative

## Specifications

| | |
|---|---|
| **Rated current** | 4 A |
| **Rated voltage** | M8 3 pin: 60 VDC<br>M8 4 pin: 30 VDC<br>M12 4-wire: 250 VDC |
| **Degree of protection** | IP67 (IEC 60529); IP69k (after DIN 40050-1) |
| **Ambient temperature** | -25°C to +70°C |

### Pin arrangement

| M8 3 pin | | M8 4 pin | | M12 4 pin | |
|---|---|---|---|---|---|
| 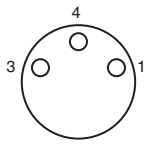 | 1 = brown<br>3 = blue<br>4 = black | 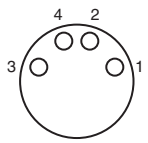 | 1 = brown<br>2 = white<br>3 = blue<br>4 = black | 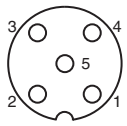 | 1 = brown<br>2 = white<br>3 = blue<br>4 = black<br>5 = n.c. |

### Materials

| | |
|---|---|
| **Pin block** | PVC |
| **Contacts** | CuSn, nickel base, 0.3 µm gold plating |
| **Fixture** | Stainless steel |
| **Cover** | PVC |
| **O-ring** | EPDM |

## Dimensions

### Y92E-S08

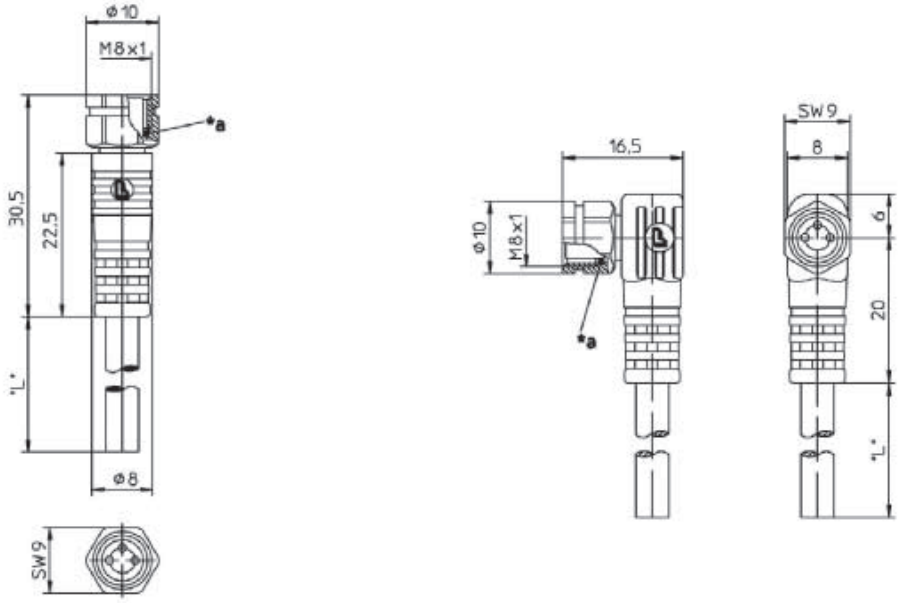


### Y92E-S12

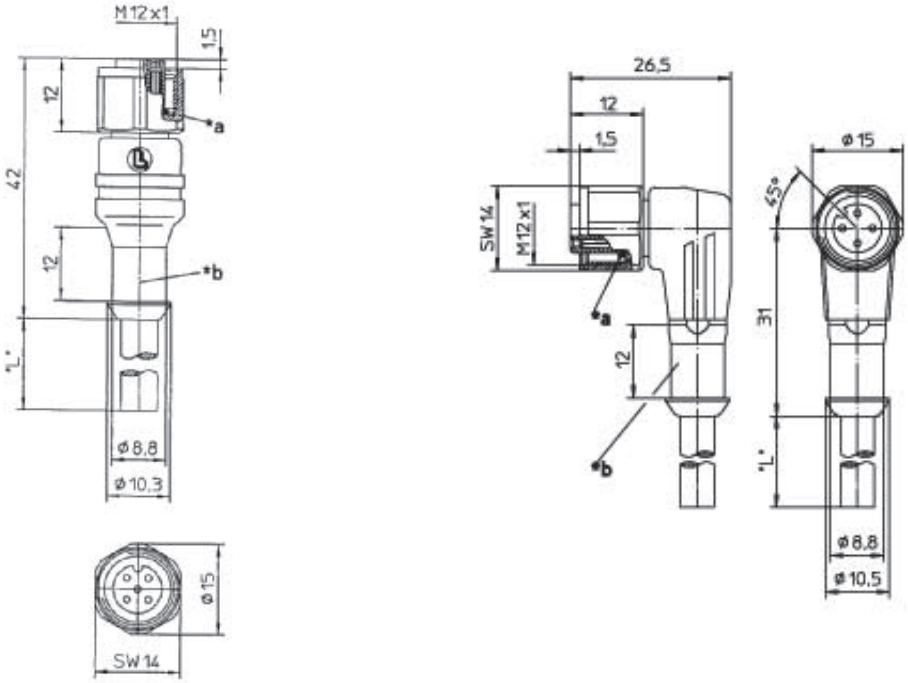


### Wiring Diagram (M8 and M12)

Contact No.

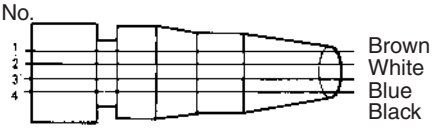


Cable lead colors

Robot Cable Connectors (M8/M12)

# XS3F-_-R, XS2F-_-R

## Ordering Information

| Type | Size | Material | | Features | Shape | Length (m) | Order code |
|---|---|---|---|---|---|---|---|
| | | Nut | Cable | | | | |
| Vibration-proof robot cable (screw on) | M8 | Brass (CuZn) | PVC | 4 pin | Straight | 2 | XS3F-M421-402-R |
| | | | | | | 5 | XS3F-M421-405-R |
| | | | | | Angled | 2 | XS3F-M422-402-R |
| | | | | | | 5 | XS3F-M422-405-R |
| Vibration-proof robot cable (snap on) | | Thermoplastic | PVC | 4 pin | Straight | 2 | XS3F-S421-402-R |
| | | | | | | 5 | XS3F-S421-405-R |
| | | | | | Angled | 2 | XS3F-S422-402-R |
| | | | | | | 5 | XS3F-S422-405-R |
| Vibration-proof robot cable (screw on) | M12 | Brass (CuZn) | PVC | 2 wire | Straight | 2 | XS2F-D421-DA0-R |
| | | | | 4 wire | | | XS2F-D421-D80-R |
| | | | | 2 wire | | 5 | XS2F-D421-GA0-R |
| | | | | 4 wire | | | XS2F-D421-G80-R |
| | | | | 2 wire | Angled | 2 | XS2F-D422-DA0-R |
| | | | | 4 wire | | | XS2F-D422-D80-R |
| | | | | 2 wire | | 5 | XS2F-D422-GA0-R |
| | | | | 4 wire | | | XS2F-D422-G80-R |
| Vibration proof robot cable (srew on) for AC usage | | | | 2 wire | Straight | 2 | XS2F-A421-DB0-R |
| | | | | 4 wire | | | XS2F-A421-D90-R |
| | | | | 2 wire | | 5 | XS2F-A421-GB0-R |
| | | | | 4 wire | | | XS2F-A421-G90-R |
| | | | | 2 wire | Angled | 2 | XS2F-A422-DB0-R |
| | | | | | | 5 | XS2F-A422-GB0-R |

## Specifications

| | M8 | M12 |
|---|---|---|
| **Rated current** | 1 A | 3 A |
| **Rated voltage** | 125 VDC | 125 VDC, 250 VAC |
| **Degree of protection** | IP67 (IEC529) | IP67 (IEC529) |
| **Ambient temperature** | Operating: -25°C to 70°C | Operating: -25°C to 70°C |

### Pin arrangement

| M8 | M12 | |
|---|---|---|
| **DC type** | | **AC type** |
| Socket 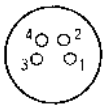 | | 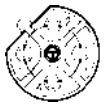 |

### Materials

| | M8 | M12 |
|---|---|---|
| **Pin Block** | PBT resin/light gray or black | PBT resin (UL94V-0), light grey or dark grey |
| **Contacts** | Brass/nickel base, 0.4-µm gold plating | Phosphor bronze, nickel base, 0.4-µm gold plating |
| **Fixture** | Brass/nickel plated | |
| **Cover** | Thermoplastic elastomer/black | Polyester elastomer |
| **O-ring** | Rubber | |

## Dimensions

XS3F-_-R

M8 Screw-on cable connectors

**Straight Connectors**

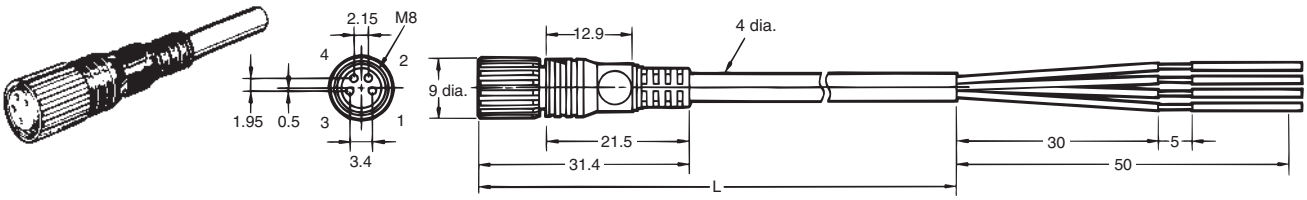


**Angled Connectors**

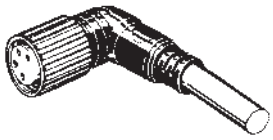

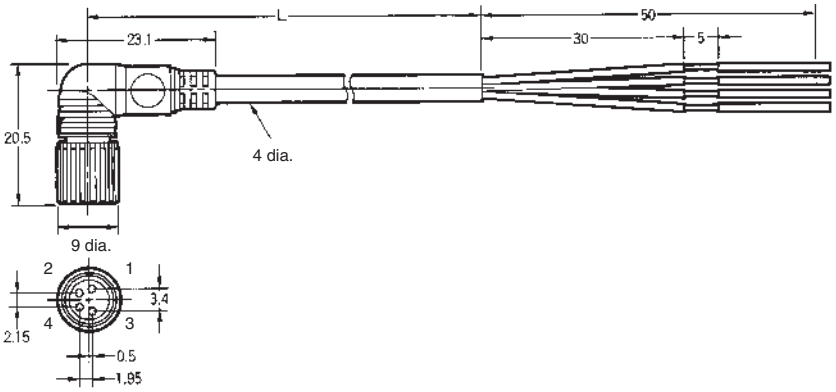


Wiring Diagram (M8)

Contact No.

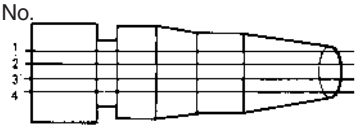


Brown
White
Blue
Black

Cable lead colors

## M8 Snap-on cable connectors

### Straight Connectors

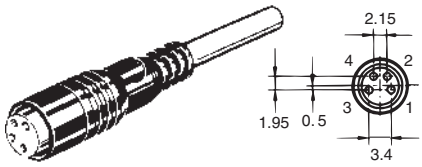


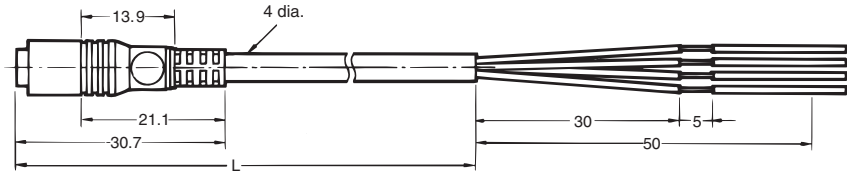


### Angled Connectors

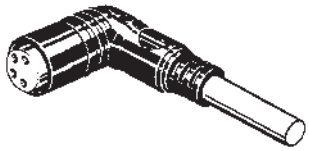

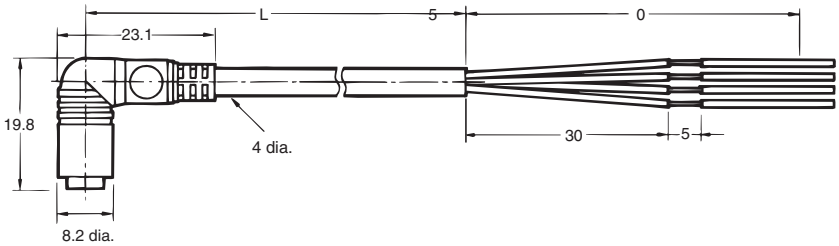


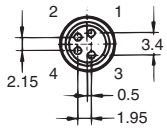


## XS2F-_-R

## M12 Screw-on cable connectors

### Straight Connectors

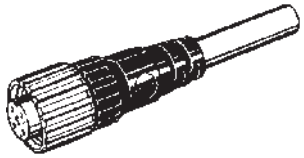

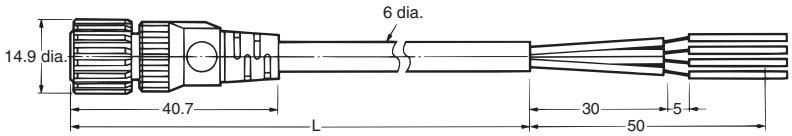


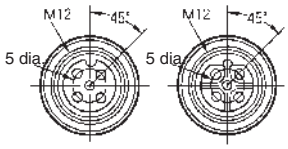


DC AC

### Angled Connectors

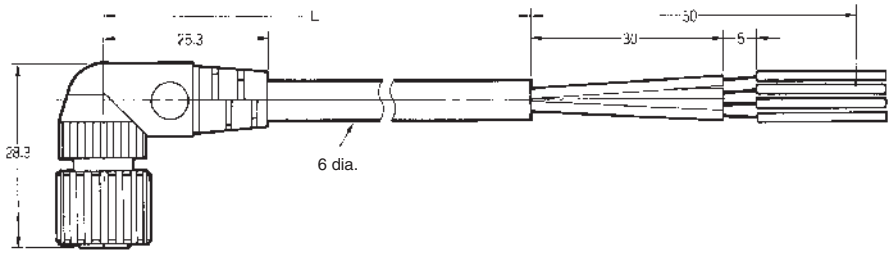


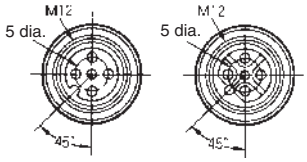


DC AC

## Wiring Diagram (M12)

| | |
|---|---|
| 2-wire model | 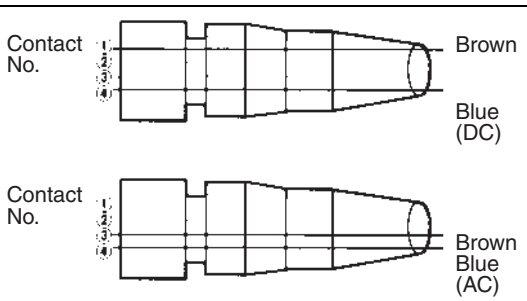 |
| 4-wire model | 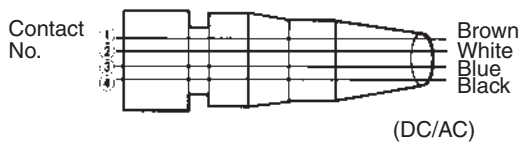 |

Heat & chemical resistant cable connectors

# XS2F-_-E

## Ordering information

| Type | Size | Material | | Features | Shape | Length (m) | Order code |
|---|---|---|---|---|---|---|---|
| | | Nut | Cable | | | | |
| Heat and detergent resistant | M12 | SUS316L | Heat resistant PVC | 4 pin | straight | 2 | XS2F-E421-D80-E |
| | | | | | | 5 | XS2F-E421-G80-E |
| | | | | | angled | 2 | XS2F-E422-D80-E |
| | | | | | | 5 | XS2F-E422-G80-E |

## Specifications

| | |
|---|---|
| **Rated current** | 3 A |
| **Rated voltage** | 125 VDC, 250 VAC |
| **Degree of protection** | IP67 (IEC 60529); IP69k (DIN 40050 part 9) |
| **Ambient temperature** | -25°C to 105°C |

### Pin arrangement

**M12 4 pin**

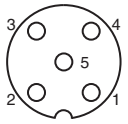


**1 = brown**
**2 = white**
**3 = blue**
**4 = black**
**5 = n.c.**

### Materials

| | |
|---|---|
| **Pin block** | PBT (UL94V-0), light gray |
| **Contacts** | Phosphor bronze, nickel base, 0.4 µm gold plating |
| **Fixture** | SUS316L |
| **Cover** | TPEE (UL94V-0), black |
| **O-ring** | Rubber |

## Dimensions

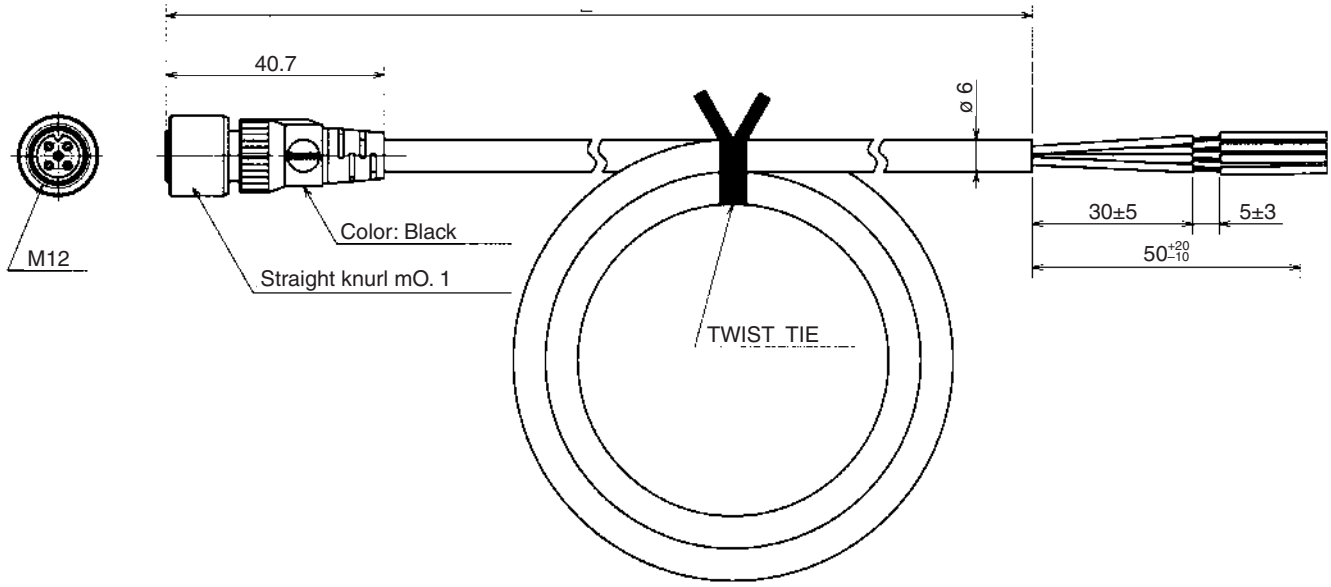


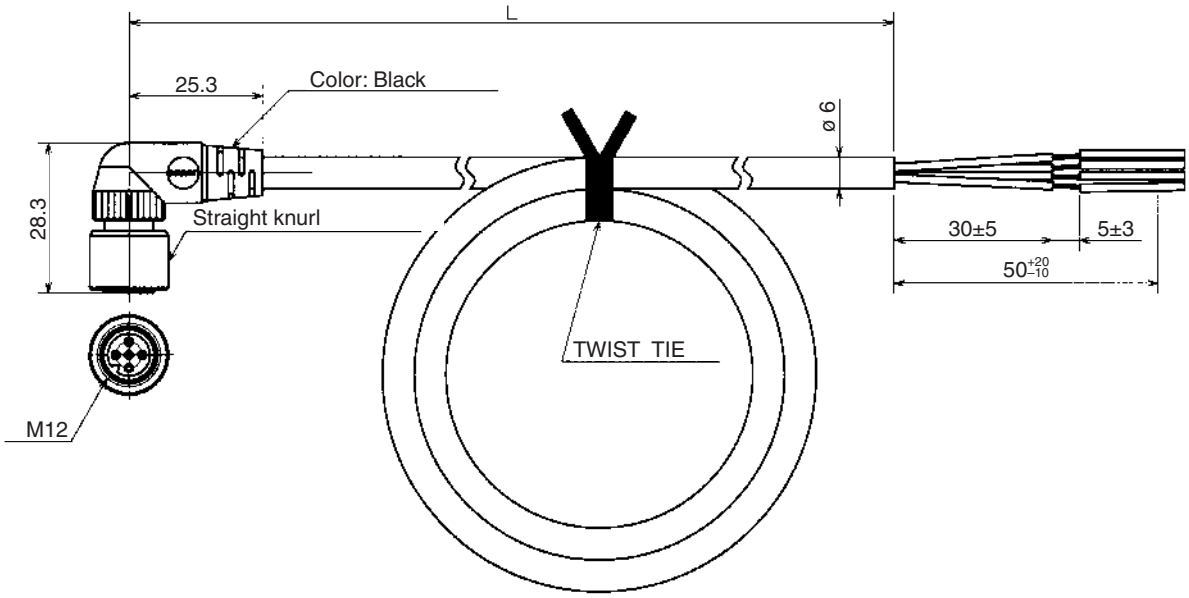


### Wiring Diagram (M12)

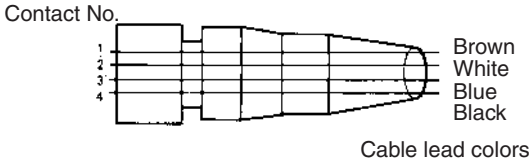

Twist & click (M12)

# XS5F

## Ordering information

| Type | Size | Material | | Features | Shape | Length (m) | Order code |
|---|---|---|---|---|---|---|---|
| | | Nut | Cable | | | | |
| Twist & Click | M12 | Brass | PVC | For standard 4 pin or Omron Smartclick connectors | Angled | 2 | XS5F-D422-D80-A |
| | | | | | | 5 | XS5F-D422-G80-A |
| | | | | | Straight | 2 | XS5F-D421-D80-A |
| | | | | | | 5 | XS5F-D421-G80-A |

Note: The XS5F connectors can be attached to standard M12 plug connectors (screw-fix) and to XS5 plug connectors (twist & click). For details on the twist & click locking mechanism refer to XS5 data sheet.

## Specifications

| | |
|---|---|
| **Rated current** | 4A |
| **Rated voltage** | 125 VDC, 250 VAC |
| **Degree of protection** | IP67 (IEC 60529) |
| **Ambient temperature** | -25°C to 70°C |

### Pin arrangement

**M12 4 poles**

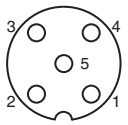


1 = brown
2 = white
3 = blue
4 = black
5 = n.c.

### Materials

| | |
|---|---|
| **Pin block** | PBT resin (UL94V-0) |
| **Contacts** | Phosphor bronze/nickel base, 0.4 µm gold plating |
| **Fixture** | Zinc alloy/nickel plated |
| **Cover** | Polyester elastomer (UL94V-0) |
| **O-ring** | Rubber |

## Dimensions

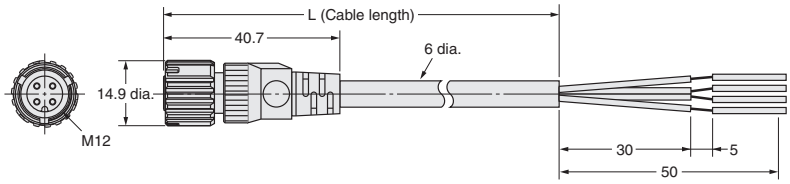

Confectionable plugs and connectors (self-assembly)

# XS2C, XS2G, Y92E-_-conf

## Ordering information

| Type | Size | Material Nut | Features | | Shape | Order code |
|---|---|---|---|---|---|---|
| Plug (male) | M8 | Polyester elastomer | 3 pin | | straight | Y92E-MM08PVC3Sconf-L |
| | | | 4 pin | | | Y92E-MM08PVC4Sconf-L |
| | M12 | | 4 pin | crimp | straight | XS2G-D4C3 |
| | | | | solder | | XS2G-D423 |
| | | | | solder | angled | XS2G-D424 |
| | | | 5 pin | screw fix | straight | XS2G-D5S1 |
| | | | | | angled | XS2G-D5S2 |
| | | | 4 pin twist & click (for 4-5mm cables) | screw fix | straight | XS2G-D4S3 |
| | | | | | angled | XS2G-D4S4 |
| Connector (female) | M8 | | 3 pin | | straight | Y92E-M08PVC3Sconf-L |
| | | | 4 pin | | | Y92E-M08PVC4Sconf-L |
| | M12 | | 4 pin | crimp | straight | XS2C-D4C3 |
| | | | | solder | | XS2C-D423 |
| | | | | crimp | angled | XS2C-D4C4 |
| | | | | solder | | XS2C-D424 |
| | | | 5 pin | screw fix | straight | XS2C-D5S1 |
| | | | | | angled | XS2C-D5S2 |

## Specifications

| | Y92E | XS2G, XS2C |
|---|---|---|
| **Rated current** | 4 A | |
| **Rated voltage** | 36 VDC | 125 VDC, 250 VAC |
| **Degree of protection** | IP67 (IEC60529) | |
| **Ambient temperature** | -25°C to 70°C | |

### Pin arrangement

| M8 | | M12 | | | |
|---|---|---|---|---|---|
| **Plug** | **Connectors** | **Plug** | | **Connectors** | |
| **4 pin** | **4 pin** | **4 pin** | **5 pin** | **4 pin** | **5 pin** |
| 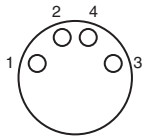 | 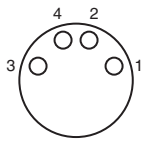 | 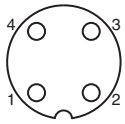 | 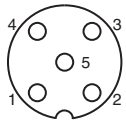 | 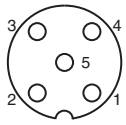 | |

**4 pin:** **1 = brown**
**2 = white**
**3 = blue**
**4 = black**
**5 = n.c.**

**5 pin:** **1 = brown**
**2 = white**
**3 = blue**
**4 = black**
**5 = green / yellow**

### Materials

| | Y92E | XS2G, XS2C |
|---|---|---|
| **Pin block** | PVC | PBT resin (UL94V-0) |
| **Contacts** | CuSn, nickel base, 0.3 µm gold plating | Brass/nickel base, 0.4 µm gold plating |
| **Fixture** | | Brass/nickel base |
| **Cover** | PVC | PBT resin (UL94V-0) |
| **O-ring** | FKM | Rubber |

# Dimensions

## Plugs (male)

XS2G-D4C□ (Crimping Model, Straight),
XS2G-D42□ (Soldering Model, Straight)

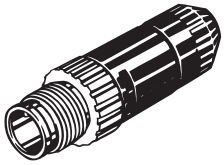

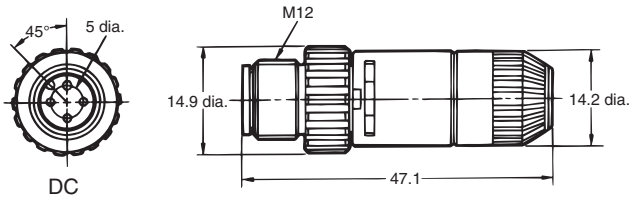


XS2G-D5S1 (Screw-on model, Straight)

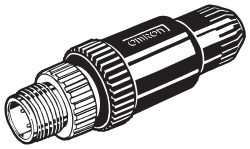

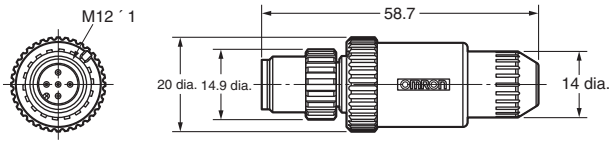


XS2G-D42□ (Soldering Model, L-shaped)

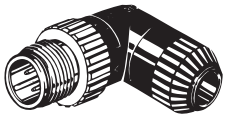

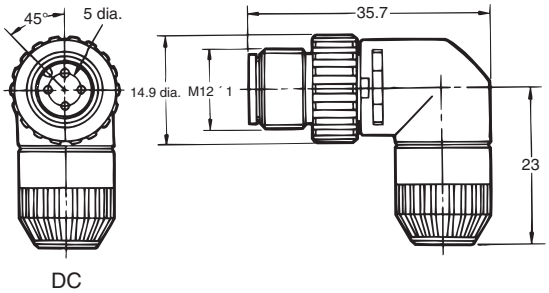


XS2G-D5S2 (Screw-on model, angled)

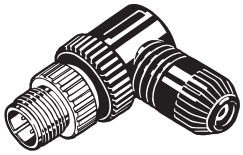

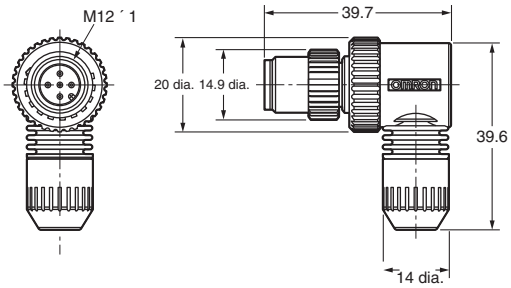


## Connectors (female)

XS2C-D4C□ (Crimping Model, Straight),
XS2C-D42□ (Soldering Model, Straight)

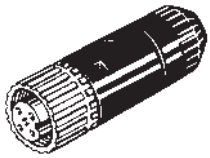

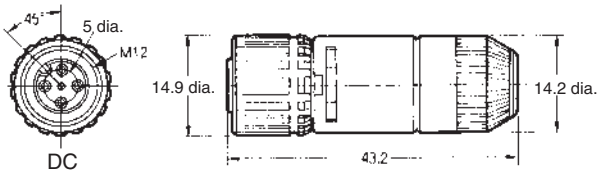


XS2C-D5S1 (Screw-on model, straight)

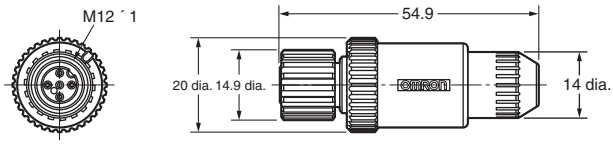

XS2C-D4C□ (Crimping Model, L-shaped)
XS2C-D42□ (Soldering Model, L-shaped)

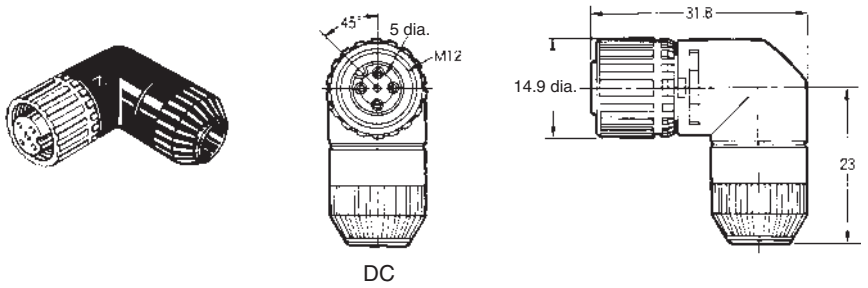


XS2C-D5S2 (Screw-on model, angled)

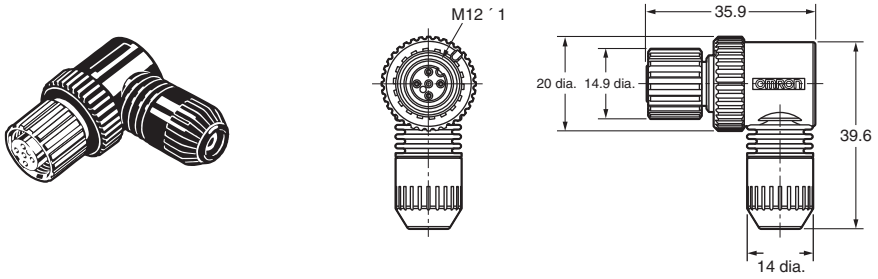

Field I/0 boxes

# XW3B, XW3D, DRT2

## Ordering information

| Type | Nr of inputs/ outputs | Output configuration | Connection | Order code |
|---|---|---|---|---|
| Direct wiring | 4 x M12 inputs | PNP*1 | 5m pre-wired | XW3B-P453-G11 |
| | 6 x M12 inputs | | | XW3B-P653-G11 |
| | 8 x M12 inputs | | | XW3B-P853-G11 |
| Direct wiring with M12 Twist&click | 4 x M12 with smartclick inputs | PNP*1 | 5m pre-wired | XW3D-P453-G11*2 |
| | 8 x M12 with smartclick inputs | | | XW3D-P853-G11*2 |
| DeviceNet | 4 x M12 inputs | PNP*1 | M12 (M12 DeviceNet cables are available) | DRT2-ID04CL-1 |
| | 8 x M12 inputs | | | DRT2-ID08CL-1*3 |
| | 16 x M12 inputs | | | DRT2-HD16CL-1*3 |
| | 8 x M12 inputs + 8 x M12 outputs | | | DRT2-MD16CL-1 |

*1 NPN types are available on request
*2 For details refer to Omron XS5 product information
*3 Separate power supply. Models with power supply via DeviceNet cable are available

## Specifications

| | XW3B/XW3D | DRT2 |
|---|---|---|
| **Rated current** | 4 A/port (signal lines)<br>12 A/box (power lines) | 6 mA input<br>0.5 A per point (output) |
| **Rated voltage** | 10 to 30 VDC | 24 VDC |
| **Degree of protection** | IP67 (IEC 60529) | |
| **Operating temperature** | -25°C to 70°C | -10°C to 55°C |

Note: For details and dimensions refer to separate datasheet or www.industrial.omron.eu

Fiber amplifier connectors

# E3X-CN

## Ordering information

| Type | Size | Features | Order code |
|---|---|---|---|
| Fiber amplifier connector | Special connector 17,8x10x15,1 | 4 wire; 2 m PVC cable | E3X-CN21 |
| | | 3 wire; 2 m PVC cable | E3X-CN11 |
| | | 2 wire slave cable; 2 m PVC | E3X-CN22*1 |
| | | 1 wire slave cable; 2 m PVC | E3X-CN12*1 |
| | | M8 4-pin plug with 30 cm PVC cable | E3X-CN21-M3J-2 0.3M |
| | | M12 4-pin plug with 30 cm PVC cable | E3X-CN21-M1J 0.3M |

*1 Slave connectors can be used to reduce wiring effort. The setup requires 1 master amplifier with the slave amplifiers directly mounted attached. The power supply is then provided by the master amplifier via the clipped on slave connectors. For 4-wire masters use 2-wire slaves and for 3-wire masters 1-wire slaves.

## Specifications

| | |
|---|---|
| **Rated current** | 2.5 A |
| **Rated voltage** | 50V |
| **Degree of protection** | IP50 (EC 60529) |
| **Ambient temperature** | Groups of 1 or 2 amplifiers: -25 to 55°C |
| | Groups of 3 to 10 amplifiers: -25 to 50°C |
| | Groups of 11 to 16 amplifiers: -25 to 45°C |

### Materials

| | |
|---|---|
| **Housing** | Polybuthylene terephthalate (PBT) |
| **Contacts** | Phosphor bronze/ gold plated/ nickel |

### Pin arrangement

M8

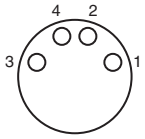


M12

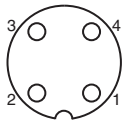


| Connector | Cable colour | |
|---|---|---|
| 1 | brown | + |
| 2 | orange/white | Output 2 or ext. input |
| 3 | blue | – |
| 4 | black | Output 1 |
| | pink | Ext. Input |

# Dimensions

## Master connectors

E3X-CN21/E3X-CN11

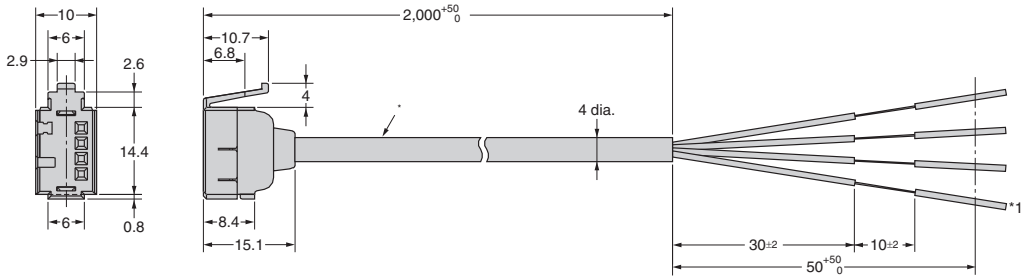


* E3X-CN21: 4-dia. vinyl-insulated round cable with 4 conductors (Conductor cross section: 0.2 mm², Insulator diameter: 1.1 mm)

*1 Only E3X-CN21

## Slave connectors

E3X-CN22/E3X-CN12

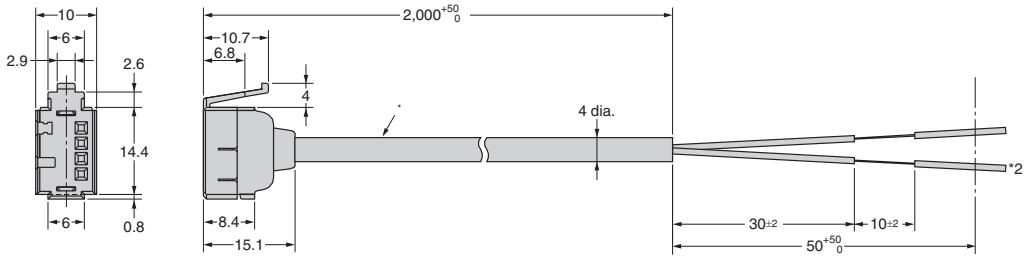


* E3X-CN21: 4-dia. vinyl-insulated round cable with 4 conductors (Conductor cross section: 0.2 mm², Insulator diameter: 1.1 mm)

*2 Only E3X-CN22

Photomicrosensor connectors

# EE-1

## Ordering information

| Type | Size | Features | Applicable sensors | Ordercode |
|---|---|---|---|---|
| **Pin connector for soldering** | 13x4x10.8 | For dark on | EE-SX47/67 | EE-1001 |
| | | For light on | | EE-1001-1 |
| **Cable connector** | 13x4x13.5 | standard cable | | EE-1010 2M |
| | | robotic cable | | EE-1010-R 2M |
| | 10x5.8x8 | standard cable | EE-SX97 | EE-1017 1M |
| | | robotic cable | | EE-1017-R 1M |
| **Cable connector for EE-SX91 pigtail versions** | 10x5.8x8 | robotic cable | EE-SX91 | EE-1016-R |

## Specifications

| | |
|---|---|
| **Rated voltage** | 5 to 24 VDC |
| **Degree of protection** | IP50 (IEC 60529) |
| **Ambient temperature range** | operating: -25 to 55°C |
| | storage: -30 to 80°C |

### Material

| | EE-1001 | EE-1010/EE-1016 | EE-1017 |
|---|---|---|---|
| **Housing** | Nylon | | |
| **Contacts** | Phosphor bronze | | |
| **Cable** | – | PVC 2 m | PVC 1 m<br>(3 m are available on request) |

### Pin arrangement

| | EE-1001, EE-1010 | | EE-1016 | | EE-1017 | |
|---|---|---|---|---|---|---|
| **1** | + | Brown | + | Brown | + | Brown |
| **2** | L | Pink | output 2 | White | 1 | Black |
| **3** | out | Black | – | Blue | 2 | White |
| **4** | – | Blue | output 1 | Black | – | Blue |

Note: For the connector EE-1001-1 the pins 1(+) and 2 (L) are short circuited

# Dimensions

## Connector
EE-1001

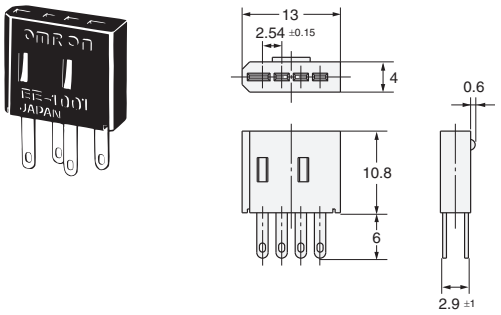


## Connector
(short-circuited between positive (+) and L terminals)
EE-1001-1

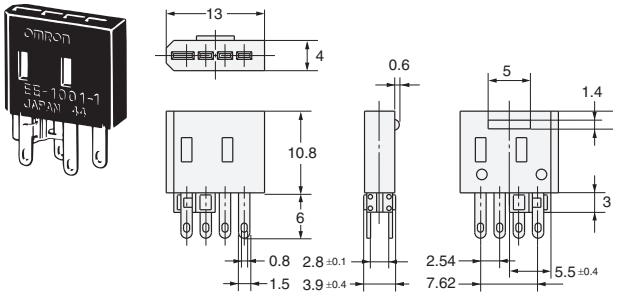


## Connector with Cable
EE-1010

## Connector with Robot Cable
EE-1010-R

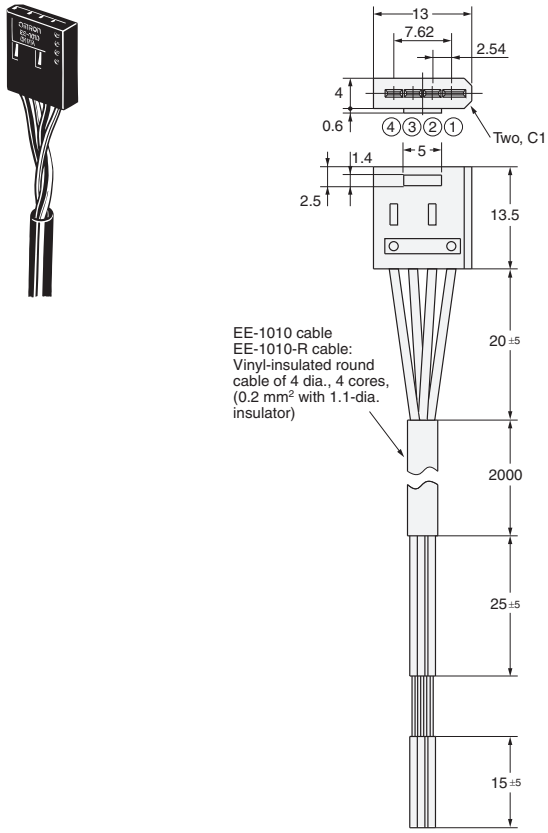


## Connector with Robot Cable
EE-1016-R

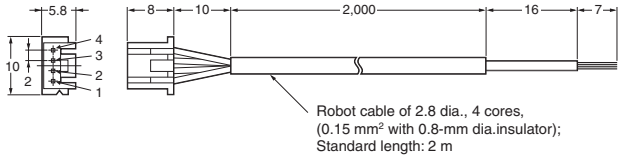


## Connector with Robot Cable
EE-1017-R

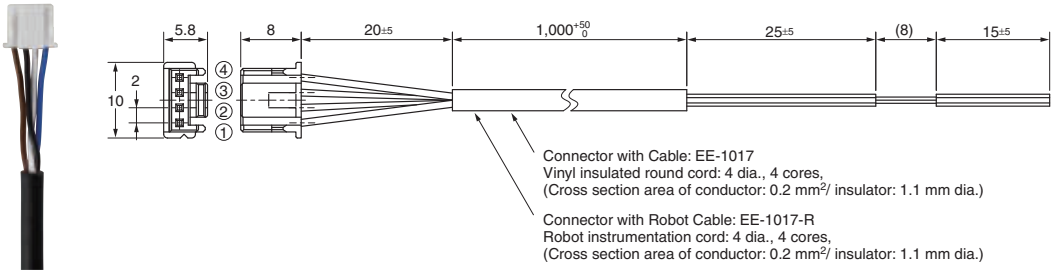

# T-connectors, Covers, Accessories, extended wiring portfolio

# XS2

| Name | Model | | Appearance |
|---|---|---|---|
| Cable connectors with plugs (open end or connector end) | XS2W Plug connectors (Connector end) | | |
| | XS2H Plug connectors (Open end) | | |
| Connector Assembly Accessories (Crimping, Soldering, or Screw-on) | XS2F Crimp Tool (for Crimping Connectors) | | 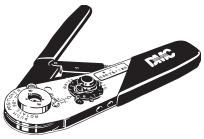 |
| | XS2U Crimping pin (for XS2G/XS2C) | | |
| | XW4Z Screwdriver (for Screw-on Connectors) | | 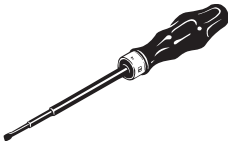 |
| Panel-mounting Connectors | XS2P Sockets (M12)<br>XS3P Sockets (M8) | | |
| | XS2M Plugs (M12)<br>XS3M Plugs (M8) | Flange-mounting Plugs | |
| | | Screw-mounting Plugs | 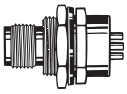 |
| T-Joints and Y-Joints<br>Used for branching and for daisy-chain connections. | XS2R T-Joint/Y-Joint Plug/Socket Connectors (M12)<br>XS3R Y-Joint Plug/Socket Connectors (M8) | T-Joints | 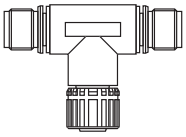 |
| | | Y-Joints | 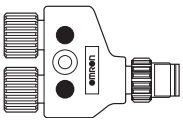 |
| Dust covers<br>Used to protect unused connector ports | XS2Z (M12)<br>XS3Z (M8) | Connector plugs | |
| | | Connector covers | |

Note: For details on these products, contact your Omron representative

Mounting accessories for standard photoelectric, inductive and capacitive sensors

# E39, Y92E

## Mounting brackets and covers

For cylindrical shapes

| Shape | Product group | Type | Housing material | Features | Applicable sensors | Order code |
|---|---|---|---|---|---|---|
| | Mounting brackets | general purpose - screw fix | plastic | - cost efficient mounting bracket<br>- for M8, M12, M18, M30<br>- surface mounting | -E3F2<br>-E2A | Y92E-B8<br>Y92E-B12<br>Y92E-B18<br>Y92E-B30 |
| | | general purpose - snap fix | stainless steel | - for dia 20 mm | -E3FZ (snap mount) | E39-EL8 |
| | | general purpose - screw fix | | - for M18 | -E3FZ (mounting with M18 nuts)<br>-E3F2 | E39-EL12 |
| 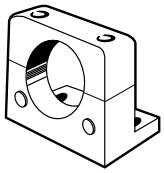 | | | plastic | - for dia 34 mm | -E2K-C | Y92E-A34 |
| | | quick access - snap fix | | - snap fix for quick sensor access<br>- for M8, M12, M18, M30<br>- surface mounting | -E3F2 (metal housing)<br>-E2A (metal housing) | Y92E-BC8<br>Y92E-BC12<br>Y92E-BC18<br>Y92E-BC30 |
| | | quick access - clamp fix | stainless steel | - clamp fix for quick sensor access with exact repositioning<br>- for M8, M12, M18, M30<br>- through mounting | | Y92E-G8<br>Y92E-G12<br>Y92E-G18<br>Y92E-G30 |

| Shape | Product group | Type | Housing material | Features | Applicable sensors | Order code |
|---|---|---|---|---|---|---|
| | Protective covers | general purpose sensor head protection | polyarylate | - for M8, M12, M18, M30<br>- for shielded and unshielded | -E2A | Y92E-E8<br>Y92E-E12<br>Y92E-E18<br>Y92E-E30 |
| 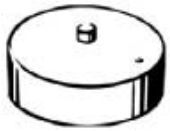 | | sputter protection for sensor head | silicone rubber | - increased protection in weld fields<br>- for M12, M18, M30<br>- for shielded sensors | | Y92E-E12-2<br>Y92E-E18-2<br>Y92E-E30-2 |
| | | general purpose lens protection | metal rim with glas cover | | E3F2 | E39-F31 |

For square shapes

| Shape | Type | Housing material | Features | Mounting type | Applicable Sensors | Order code |
|---|---|---|---|---|---|---|
| | General purpose mounting | Stainless steel (SUS 304) | inclination angle adjustment | side wall mounting | E3Z | E39-L43 |
| | | | | back wall mounting | | E39-L44 |
| | | | horizontal and inclination angle adjustment | surface mounting | | E39-L104 |
| | | | up/down position adjustment | back wall mounting | E3T-S | E39-L117 |
| 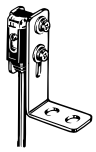 | | | | surface mounting | | E39-L116 |

| Shape | Type | Housing material | Features | Mounting type | Applicable Sensors | Order code |
|---|---|---|---|---|---|---|
| 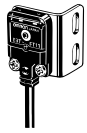 | General purpose mounting | Stainless steel (SUS 304) | up/down position adjustment | back wall mounting | E3T-F | E39-L119 |
| | | | | side wall mounting | | E39-L120 |
| | | | inclination angle adjustment | back wall mounting | E3G-R | E39-L132 |
| 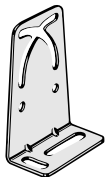 | | | | side and back wall mounting | | E39-L131 |
| | | | | surface mounting | E3G-L | -E39-L139<br>-E39-L140 |

| Shape | Type | Housing material | Features | Mounting type | Applicable Sensors | Order code |
|---|---|---|---|---|---|---|
| | General purpose mounting | Stainless steel (SUS 304) | 3D rotation | surface, side and backwall mounting | E3G, E3Z | E39-EL4 |
| | | | | | E3T, E3Z, E3C | E39-EL5 |
| | | | | | | E39-EL6 |
| | Side protection | | inclination angle adjustment | protective side wall mounting | E3T-S | E39-L118 |

| Shape | Type | Housing material | Features | Mounting type | Applicable Sensors | Order code |
|---|---|---|---|---|---|---|
| | Full protection | Stainless steel (SUS 304) | inclination angle adjustment | protective side wall mounting | E3Z (pre-wired types) | E39-L142 |
| | | | horizontal angle adjustment | protective surface mounting | | E39-L144 |
| | | | | | -E3Z | E39-L98 |
| | Telescope mounting | | - 360° horizontal rotation<br>- max telescope length | side and back wall mounting | -E3Z<br>-E39-R3 | -E39-L150<br>-E39-L151 |
| | | | 3D rotation around x, y, and z-axis | side wall, back wall and surface mounting | | E39-L93FH<br>E39-L93FV |
| | | | Extension pipe with XY joint | pipe mounting | E39-L93_ | E39-L93XY |
| | | | Reflector adapter for E39-L93_ | telescope mounting | -E39-R1<br>-E39-R1S | E39-L96 |

## Slit, filters and other accessories

| Shape | Type | Features | Mounting type | Applicable Sensors | Order code |
|---|---|---|---|---|---|
| | Precision detection slit cover | - slit width from dia 0.5 mm for min object size detection of dia 0.2 mm | snap on | E3Z-T | E39-S65 |
| | | | | E3T-□T | -E39-S63<br>-E39-S64 |
| 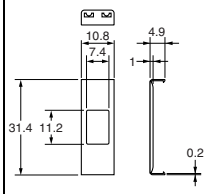 | Mutual interference prevention | polarizing filter for close mounting of multiple sensors through beam sensors | | E3Z-T□A | E39-E11 |
| | Adjustment aid | adjustment aid for sensitivity adjustment | | E3T-ST1 | E39-E10 |
| | | | | photo electric sensors with adjustable potentiometers | E39-G2 |

# Dimensions

## E39-L43

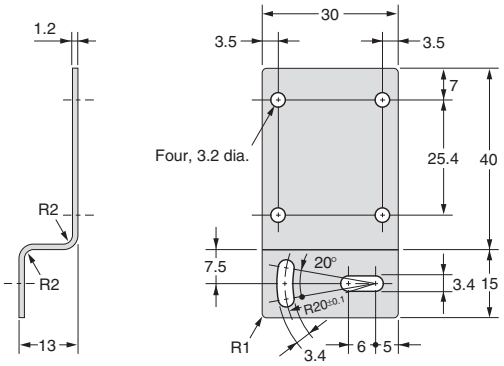


## E39-L44

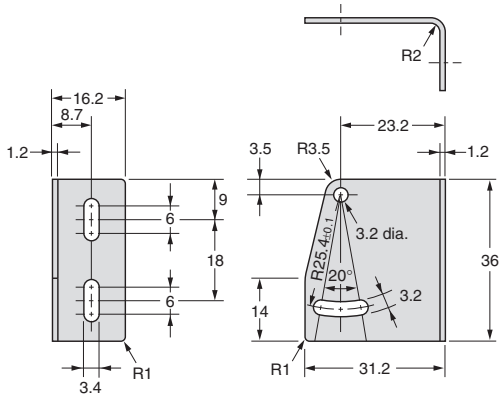


## E39-L87

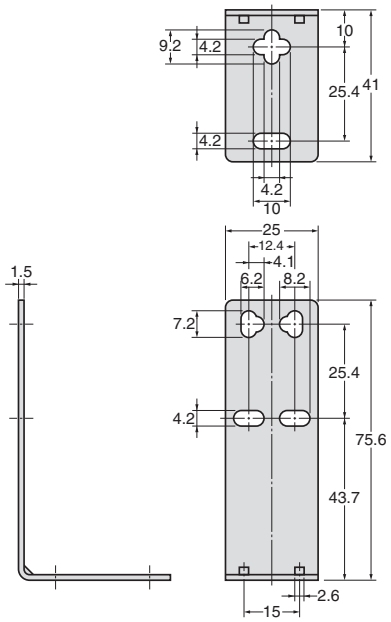


## E39-L93FH

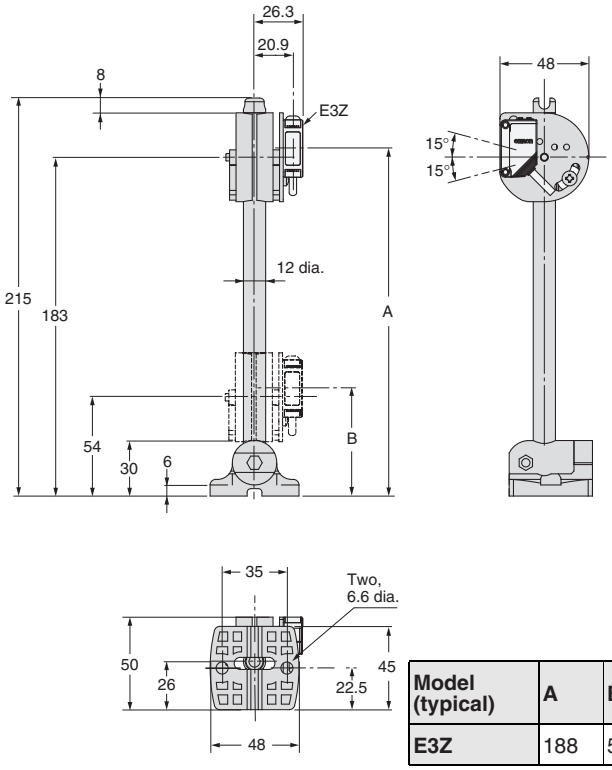


| Model (typical) | A | B |
|---|---|---|
| E3Z | 188 | 59 |

## E39-L93FV

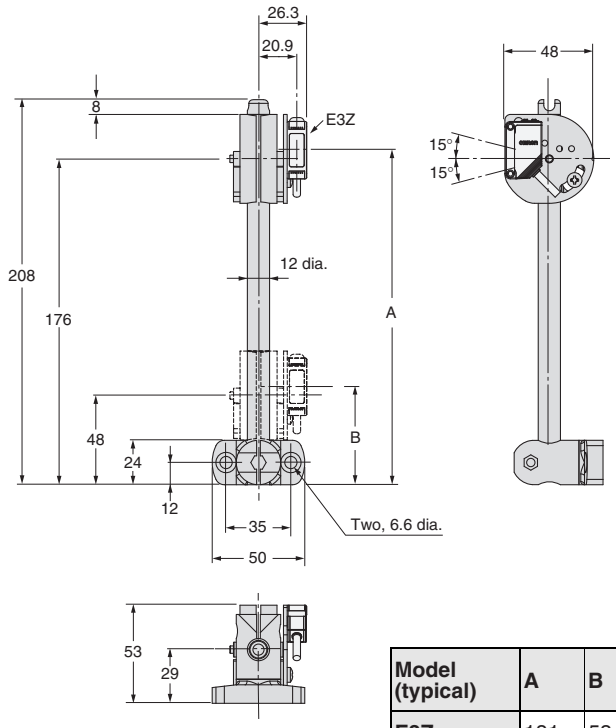


| Model (typical) | A | B |
|---|---|---|
| E3Z | 181 | 53 |

## E39-L93XY

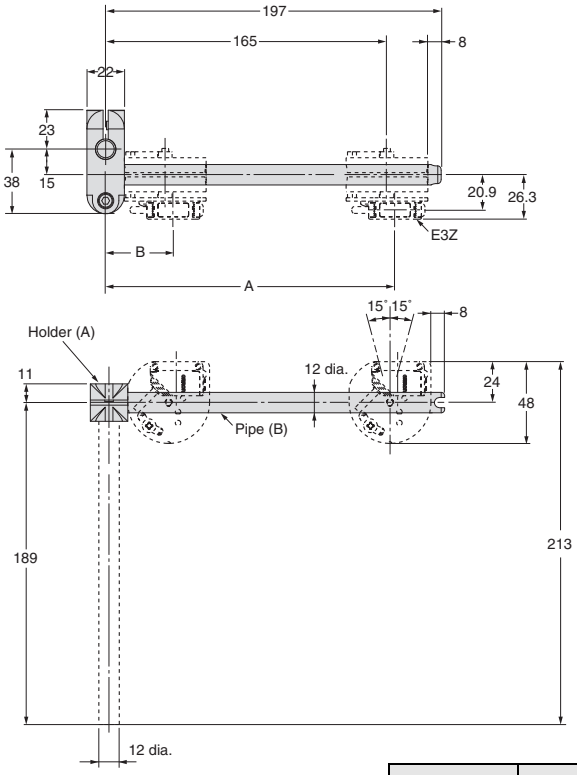


Note: The E39-L93XY consists of only the one joint holder (A) and pipe (B), and the two hexagonal bolts and nuts. It cannot be mounted to the Sensor alone.

| Model (typical) | A | B |
|---|---|---|
| E3Z | 170 | 40 |

## E39-L96

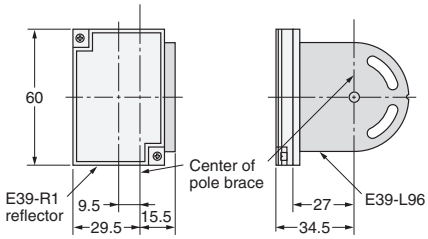


## E39-L98 (Vertical)

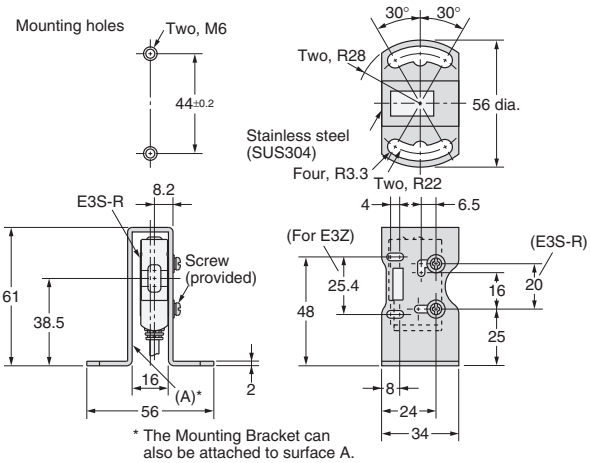


* The Mounting Bracket can also be attached to surface A.

## E39-L104

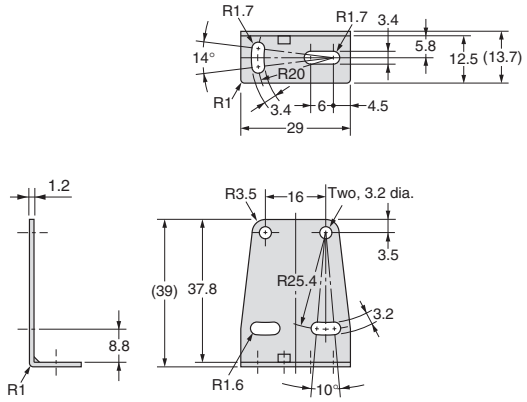


## E39-L116

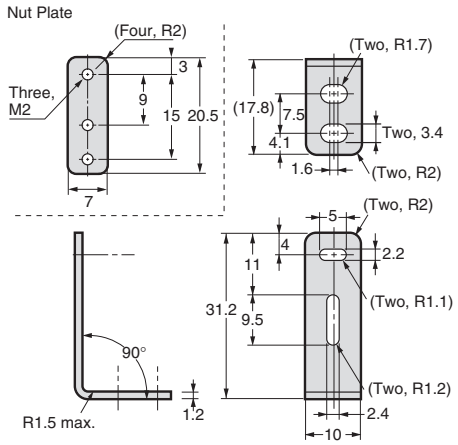


## E39-L117

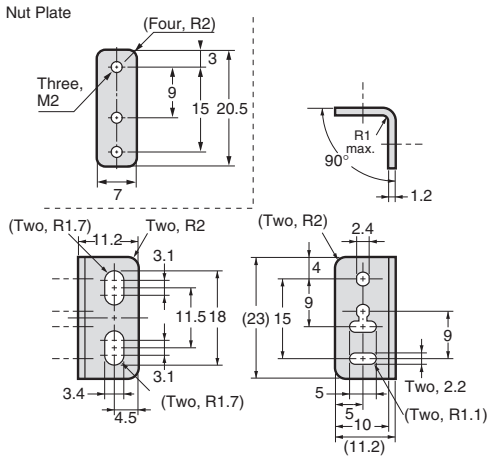


## E39-L119

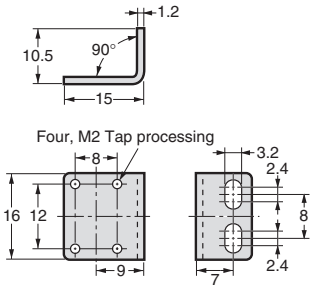


## E39-L120

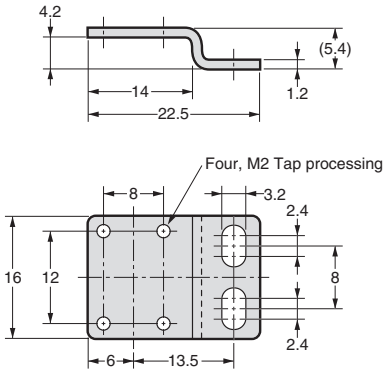


## E39-L131

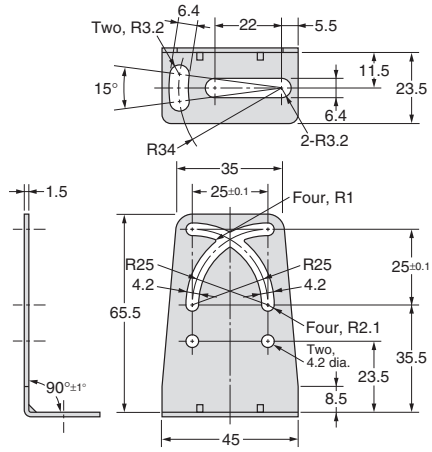

## E39-L132

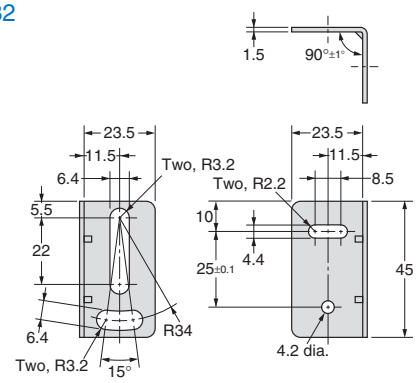


## E39-L142

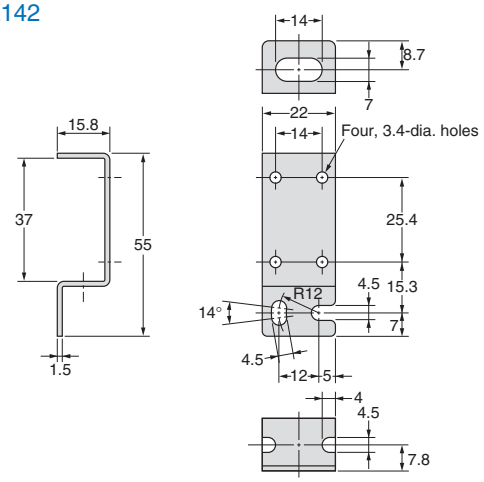


## E39-L144

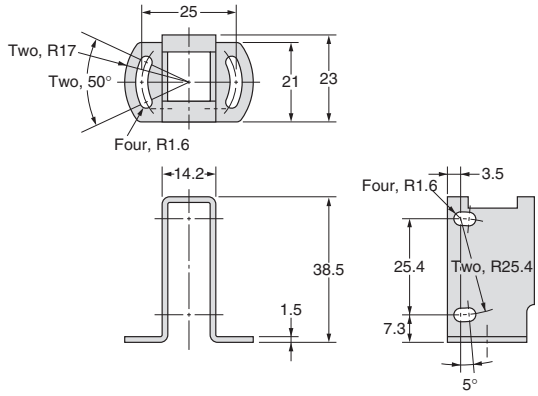


## E39-L150 (Vertical)
## E39-L151 (Vertical)

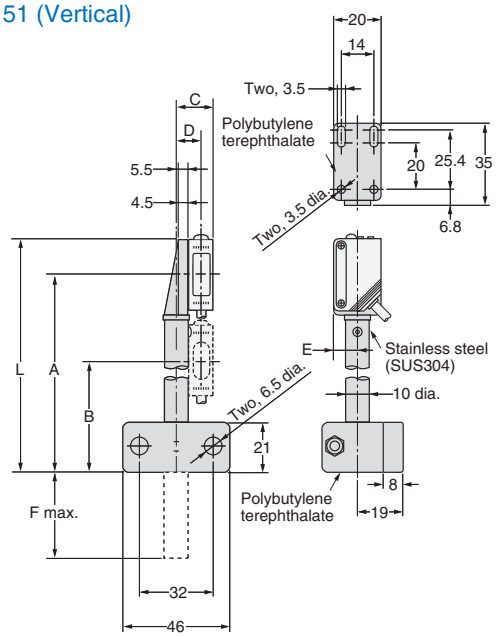


## E39-L150

| Model (typical) | A | B | C | D | E | F |
|---|---|---|---|---|---|---|
| E3Z | 84.5 | 47.5 | 16.3 | 10.9 | 10 | 37 |

| Model | L |
|---|---|
| E39-L150 | 100 |
| E39-L151 | 200 |

Reflectors for retro-reflective photoelectric sensors

# E39-R

## Accessories

| Shape | Type | Housing material | Features | Size in mm | Applicable Sensor | Order code |
|---|---|---|---|---|---|---|
| | General purpose reflectors | ABS base<br>Acrylic surface | Surface screw mounting (diagonal holes) | 40x60x7.5 | Retro-reflective photoelectric sensors – without M.S.R<br>Retro-reflective photoelectric sensors – with M.S.R.[*1] | E39-R1S |
| | | | Surface screw mounting (holes on one side only) | 35.4x42.3x8 | | E39-R9 |
| | | | | 51.4x60.3x8.5 | | E39-R42 |
| | Small size | | Side screw mounting or surface selfadhesive | 41.8x22.5x11 | | E39-R3 |
| | | | Surface screw mounting | 23x13.7x4.9 | | E39-R4 |
| | Large size | | | 100x100x9 | | E39-R8 |
| | | | | 84.5x84.5x8.7 | | E39-R40 |

[*1] Mirror Surface Rejection (MSR) is realized by using polarization filters

| Shape | Type | Housing material | Features | Size in mm | Applicable Sensor | Order code |
|---|---|---|---|---|---|---|
| | **High precision** | ABS base<br>Acrylic surface | Microtripel for improved performance with fine beam sensors | 52x40x4.8 | Recommended for fine beam coaxial models (E3C-LR, E3Z-LR, E3T-SR4) | E39-R6 |
| | | | | 30x45 | | E39-R12 |
| | | | | 14x23x1 | | E39-R37-CA |
| | | | | 12x24 | | E39-R13 |
| | **Simple mounting** | ABS base<br>Acrylic surface | Round shape with centered mounting hole for simple screw mounting | Diameter: 84<br>Depth: 7.4 | Photoelectric sensors with and without M.S.R.[*1] | E39-R7 |
| | **Snap mounting** | | Snap mounting for fast installation | Diameter: 30<br>Diameter of snap mount tool: 5 | Recommended for snap mounting sensor E3FZ | E39-R49 |
| | **Enhanced detergent resistance** | PVC | Surface screw mounting<br>IP69k after DIN 40050 part 9 | 40x60x7.5 | Recommended for harsh environment sensors | E39-R50 |
| | | | | 20x60x6 | | E39-R51 |
| | **Highest detergent resistance** | SUS316L<br>Borosilicat | Surface screw mounting | 43x30x5 | | E39-R16 |
| | **Heat resistant** | Borosilicat | Surface screw mounting<br>450°C heat resistance<br>Suitable for vacuum environment | 95x51x8 | | E39-R47 |
| | **Non-fogging reflector** | ABS<br>Acrylic surface | Anti-fogging coating | 40x60x7.5 | | E39-R1K |

[*1] Mirror Surface Rejection (MSR) is realized by using polarization filters

| Shape | Type | Housing material | Features | Size in mm | Applicable Sensor | Order code |
|---|---|---|---|---|---|---|
| | **Special polarizing** | ABS base<br>PMMA surface | Special polarizing filter to PET | 40x80x8.5 | E3ZM-B | E39-RP1 |
| | **General purpose tape reflectors** | Acrylic | Self adhesive<br>Pre cut | 35x10x0.7 | Photoelectric sensors with and without M.S.R.[*1] | E39-RS1 |
| | | | | | Optimised for E3T-SR4 | E39-RS1-CA |
| 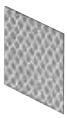 | | | | 40x35x0.7 | | E39-RS2 |
| | | | | | Optimised for E3T-SR4 | E39-RS2-CA |
| | | | | 80x70x0.6 | | E39-RS3 |
| | | | | | Optimised for E3T-SR4 | E39-RS3-CA |
| | | | Self adhesive<br>Self cut/roll material | 25 mm x 5 m | | E39-RS25 5 m |
| | | | | 25 mm x 22.8 m | | E39-RS25 22.8 m |
| 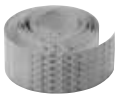 | | | | 50 mm x 5 m | | E39-RS50 5 m |
| | | | | 50 mm x 22.8 m | | E39-RS50 22.8 m |
| | **High precision tape reflectors** | | Self adhesive<br>Pre cut | 195x22 | Recommended for fine beam and laser sensors (E3Z-LR, E3C, E3X) | E39-RS4 |
| 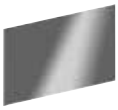 | | | | 108x46 | | E39-RS5 |

[*1] Mirror Surface Rejection (MSR) is realized by using polarization filters

# Dimensions

## E39-R1S
## E39-R1K *

Material, reflective surface: acrylic
Rear surface: ABS

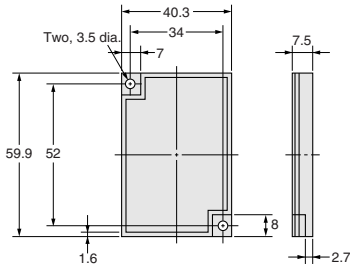


*E39-R1 only
Coating on reflective surface

## E39-R9

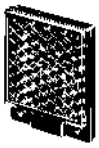

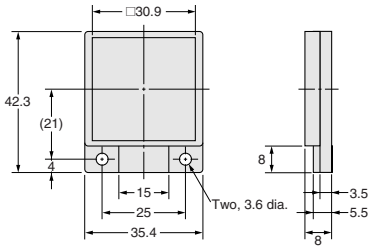


Material, reflective surface: acrylic
Rear surface: ABS

## E39-R42

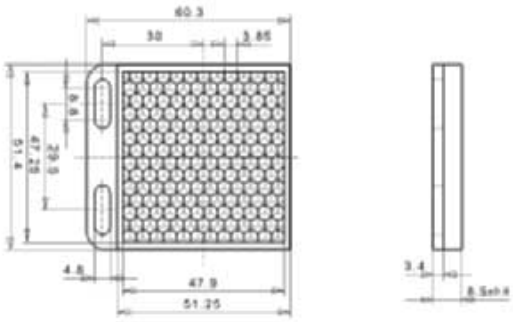

## E39-R7

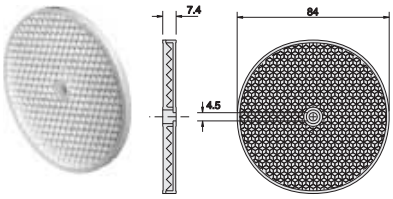


## E39-R40

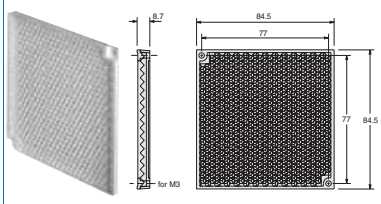


## E39-R8

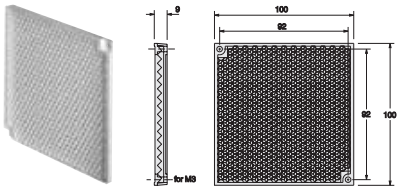


## E39-R3

Material, reflective surface: acrylic
Rear surface: ABS

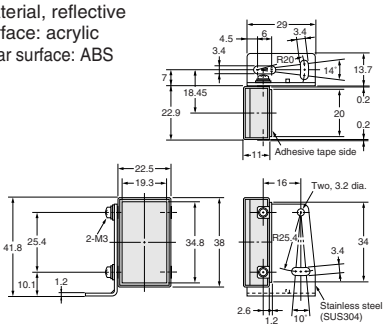


## E39-R4

Material:
Reflective surface: acrylic
Rear surface: ABS

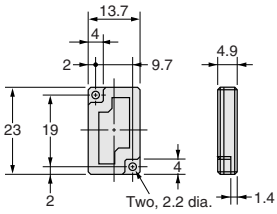


## E39-R37-CA

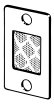

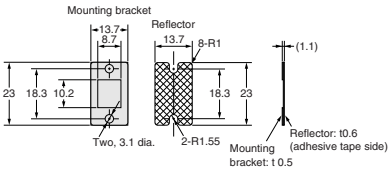


Material:
Mounting plate: stainless steel (SUS301)
Reflective surface: acrylic

Note: The reflective plate and mounting plate (1) come as a set.

## E39-R6

Material, reflective surface: acrylic
Rear surface: ABS

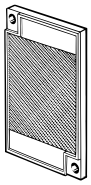

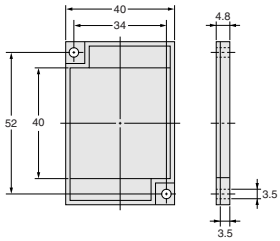


## E39-R12/-R14

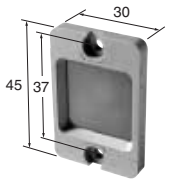


## E39-R13

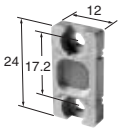


## E39-RP1

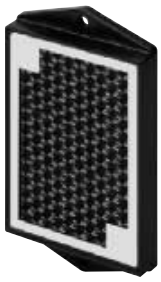

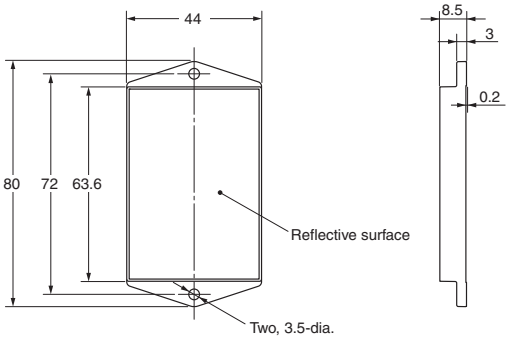

Cat. No. E26E-EN2-04

**In the interest of product improvement, specifications are subject to change without notice.**

**OMRON EUROPE B.V.**

Wegalaan 67-69,
NL-2132 JD, Hoofddorp,
The Netherlands
Phone: +31 23 568 13 00
Fax: +31 23 568 13 88
www.eu.omron.com

Общество с ограниченной ответственностью «МосЧип» ИНН 7719860671 / КПП 771901001
Адрес: 105318, г.Москва, ул.Щербаковская д.3, офис 1107

**Данный компонент на территории Российской Федерации**

**Вы можете приобрести в компании MosChip.**

Для оперативного оформления запроса Вам необходимо перейти по данной ссылке:

http://moschip.ru/get-element

Вы можете разместить у нас заказ для любого Вашего проекта, будь то серийное производство или разработка единичного прибора.

В нашем ассортименте представлены ведущие мировые производители активных и пассивных электронных компонентов.

Нашей специализацией является поставка электронной компонентной базы двойного назначения, продукции таких производителей как XILINX, Intel (ex.ALTERA), Vicor, Microchip, Texas Instruments, Analog Devices, Mini-Circuits, Amphenol, Glenair.

Сотрудничество с глобальными дистрибьюторами электронных компонентов, предоставляет возможность заказывать и получать с международных складов практически любой перечень компонентов в оптимальные для Вас сроки.

На всех этапах разработки и производства наши партнеры могут получить квалифицированную поддержку опытных инженеров.

Система менеджмента качества компании отвечает требованиям в соответствии с ГОСТ Р ИСО 9001, ГОСТ РВ 0015-002 и ЭС РД 009

**Офис по работе с юридическими лицами:**

105318, г.Москва, ул.Щербаковская д.3, офис 1107, 1118, ДЦ «Щербаковский»

Телефон: +7 495 668-12-70 (многоканальный)

Факс: +7 495 668-12-70 (доб.304)

E-mail: info@moschip.ru

Skype отдела продаж:
moschip.ru
moschip.ru_4
moschip.ru_6
moschip.ru_9