Magnecraft™ General Purpose Relays

Catalog 2015

Schneider Electric™

Magnecraft™ General Purpose Relays

- Series Overview 3
- 792 Control Series 4
- 781R Series 9
- 782 Power Series 13
- 783 Series 17
- 784 Series 21
- 750R Series 25
- 788R Series 29
- 782H Hazardous Location Series 33
- 750H Hazardous Location Series 37
- UL Listed Relay/Socket Combinations 41
- Sockets and Accessories 42
  - Socket Specifications 42
  - Mounting Adapter Specifications 65
  - Socket Accessories 66
- Application Data 73
- Website Guide 75

Magnecraft General Purpose Relays

Designed with specialized magnetic armatures and coils, Magnecraft™ General Purpose Relays easily handle current loads ranging from 10 mA to as large as 15 A. With multiple features, and a broad line of sockets and accessories, these relays offer the options needed to improve design, expedite installation, and simplify testing of your application.

Key Features

- Socket, panel, and DIN mounting options
- Multiple features and contact configurations available
- Optional protection, mounting, and identification accessories
- Ideal for MRO direct replacement
- UL Class I Division 2 models for hazardous locations

Series	Features	Terminals	Contact Configuration	Output Current	Page
792 Control	Plug-In Relay	Blade	DPDT and 4PDT	3–12 A	4
781R	Plug-In Relay	Blade	SPDT	15 A	9
782 Power	Plug-In Relay	Blade	DPDT	15 A	13
783	Plug-In Relay	Blade	3PDT	15 A	17
784	Plug-In Relay	Blade	4PDT	15 A	21
750R	Plug-In Relay	Octal (8 Pin)	DPDT	10 A	25
		Octal (11 Pin)	3PDT	10 A	
788R	Plug-In Relay	Blade	DPDT and 3PDT	10 A	29
782H	Hermetically Sealed Relay	Blade	4PDT	5 A	33
				3 A	
				1 A	
750H	Hermetically Sealed Relay	Octal (8 Pin)	DPDT	12 A	37
		Octal (11 Pin)	3PDT	12 A	

Magnecraft General Purpose Relays

792 Control Series

DPDT 12 A; 4PDT 6 A and 3 A

UL Listed when used with proper Magnecraft sockets

792 Clear Cover

792 Full-Feature Cover

Description

The 792 Plug-in Control relays offer clear or full-feature covers with multiple mounting options and accessories; 4PDT models save valuable space while adding increased functionality.

Feature	Benefit
12 A / 6 A / 3 A switching current	Ideal for various automation panels and controls
Clear or full-feature cover options	Full-feature covers include LED indicator and locking test button to facilitate maintenance and expedite commissioning
DPDT and 4PDT contact options	Simultaneously control 2 or 4 separate circuits
Socket mount option	Simplifies installation and maintenance while also allowing the use of protection modules, hold-down clips, and other accessories
Gold-flashed contacts	Reduces contact oxidation and increases shelf life
Mechanical flag indicator	Standard feature that displays relay status during testing or operation without having to power the relay

Contact Rating	Contact Configuration	Nominal Coil Voltage	Coil Resistance (Ω)	Contacts	Part Number: Clear Cover	Part Number: Clear Cover with LED	Part Number: Full-Feature Cover
3 A	4PDT	12 Vac	44	Low-Level Bifurcated	792XDX3C-12A	792XDX3CL-12A	792XDX3M4L-12A
		24 Vac	177		792XDX3C-24A	792XDX3CL-24A	792XDX3M4L-24A
		48 Vac	708		792XDX3C-48A	792XDX3CL-48A	792XDX3M4L-48A
		120 Vac	3630		792XDX3C-120A	792XDX3CL-120A	792XDX3M4L-120A
		240 Vac	17720		792XDX3C-240A	792XDX3CL-240A	792XDX3M4L-240A
		12 Vdc	160		792XDX3C-12D	792XDX3CL-12D	792XDX3M4L-12D
		24 Vdc	640		792XDX3C-24D	792XDX3CL-24D	792XDX3M4L-24D
		48 Vdc	2560		792XDX3C-48D	792XDX3CL-48D	792XDX3M4L-48D
		110 Vdc	13440		792XDX3C-110D	792XDX3CL-110D	792XDX3M4L-110D
12 A	DPDT	12 Vac	44	Standard	792XBXC-12A	–	792XBXM4L-12A
		24 Vac	177		792XBXC-24A	–	792XBXM4L-24A
		48 Vac	708		792XBXC-48A	–	792XBXM4L-48A
		120 Vac	3630		792XBXC-120A	–	792XBXM4L-120A
		240 Vac	17720		792XBXC-240A	–	792XBXM4L-240A
		12 Vdc	160		792XBXC-12D	–	792XBXM4L-12D
		24 Vdc	640		792XBXC-24D	–	792XBXM4L-24D
		48 Vdc	2560		792XBXC-48D	–	792XBXM4L-48D
		110 Vdc	13440		792XBXC-110D	–	792XBXM4L-110D
6 A	4PDT	12 Vac	44		792XDXC-12A	792XDXCL-12A	792XDXM4L-12A
		24 Vac	177		792XDXC-24A	792XDXCL-24A	792XDXM4L-24A
		48 Vac	708		792XDXC-48A	792XDXCL-48A	792XDXM4L-48A
		120 Vac	3630		792XDXC-120A	792XDXCL-120A	792XDXM4L-120A
		240 Vac	17720		792XDXC-240A	792XDXCL-240A	792XDXM4L-240A
		12 Vdc	160		792XDXC-12D	792XDXCL-12D	792XDXM4L-12D
		24 Vdc	640		792XDXC-24D	792XDXCL-24D	792XDXM4L-24D
		48 Vdc	2560		792XDXC-48D	792XDXCL-48D	792XDXM4L-48D
		110 Vdc	13440		792XDXC-110D	792XDXCL-110D	792XDXM4L-110D

Part Number Explanation

792 **XDX** **3** **M4L** - **24D**

Series:
792 = 792 Series Control Relay

Contact Configuration:
XBX = DPDT
XDX = 4PDT

Contact Code:
None = Standard 6–12 A Silver Alloy Contacts
3 = 3 A Bifurcated Contacts

Cover Options:
C = Clear Cover
CL = Clear Cover and LED
M4L = Locking Push Button and LED

Coil Voltages:
12–240A = 12–240 Vac
12–110D = 12–110 Vdc

**Please contact Customer Service for more information (847-441-2540).*

Specifications

Part Number	792XBX
Contact Characteristics	
Terminal Style	Blade
Contact Material	Silver Alloy
Contact Configuration	DPDT
Carrying Current	12 A
Maximum Switching Voltage	IEC: 250 Vac / 28 Vdc UL/CSA: 300 Vac / 30 Vdc
Rated Switching Current (Conforming to IEC AC-1 and DC-1)	NO: 12 A at 250 Vac, NC: 6 A at 250 Vac NO: 12 A at 28 Vdc, NC: 6 A at 28 Vdc
Rated Switching Current (Conforming to UL)	**Resistive:** 12 A at 277 Vac,100 k cycles **Resistive:** 12 A at 120 Vac, 200 k cycles **Resistive:** 12 A at 30 Vdc,100 k cycles **Motor:** 1/2 hp at 120 Vac, 6 k cycles **Motor:** 1 hp at 277 Vac, 6 k cycles **B300 Pilot Duty**, 6 k cycles
Minimum Switching Requirement	10 mA at 17 Vdc
Coil Characteristics	
Maximum Operating Voltage	110% (AC/DC)
Maximum Pickup Voltage	80% (AC); 80% (DC)
Drop-out Voltage Threshold	15% (AC); 10% (DC)
Average Consumption	0.9–1.2 VA (AC); 0.8–1.1 W (DC)
General Characteristics	
Electrical Life at Rated Load	200,000 operations (where stated)
Mechanical Life (Unpowered)	10,000,000 operations
Operating Time	25 ms max. at 80% rated coil voltage 20 ms max. at 100% rated coil voltage
Release time	20 ms max. (DC) 35 ms max. (AC)
Impulse Withstand Voltage	4 kV (1.2 / 50 µs)
Dielectric Strength—Between Coil and Contact (AC)	2000 V (rms)
Dielectric Strength—Between Poles (AC)	2000 V (rms)
Dielectric Strength—Between Contacts (AC)	1300 V (rms)
Ambient Air Temperature around the Device—Storage	−40 to +85 °C (−40 to +185 °F)
Ambient Air Temperature around the Device—Operation	−40 to +55 °C (−40 to +131 °F)
Vibration Resistance—In Operation	3 gn at 35–150 Hz
Vibration Resistance—Not Operating	5 gn at 35–150 Hz
Shock Resistance—In Operation	10 gn
Shock Resistance—Not Operating	30 gn
Degree of Protection (Housing Only)	IP40
Weight	37 g (1.31 oz)
Agency Approvals	UL with socket, UR (E164862), CE, CSA (225619), RoHS

Note: Actual product performance may vary depending on application and environmental conditions.

Specifications *(continued)*

Part Number	792XDX	792XDX3
Contact Characteristics		
Terminal Style	Blade	Blade
Contact Material	Silver Alloy	Bifurcated
Contact Configuration	4PDT	4PDT
Carrying Current	6 A	3 A
Load Type	Standard	Low Level
Maximum Switching Voltage	300 V	300 V
Rated Switching Current (Conforming to IEC AC1 and DC1)	NO: 6 A at 250 Vac; NC: 3 A at 250 Vac NO: 6 A at 28 Vdc; NC: 3 A at 28 Vdc	NO: 2 A at 250 Vac; NC: 1 A at 250 Vac NO: 2 A at 28 Vdc; NC: 1 A at 28 Vdc
Switching Current (Conforming to UL)	**Resistive**: 6 A at 277 Vac, 200 k cycles 8 A at 120 Vac, 200 k cycles 8 A at 30 Vdc, 200 k cycles **Motor**: 1/3 hp at 120 Vac, 6 k cycles 1/2 hp at 277 Vac, 6 k cycles **Pilot Duty**: B300, 6 k cycles	**General Purpose**: 3 A at 240–277 Vac 3 A at 120 Vac **Resistive**: 3 A at 30 Vdc **Motor**: 1/16 hp (2.8 A FLA) at 120 Vac **Pilot Duty**: 5 A make, 0.5 A break, 3 A continuous at 120 Vac
Minimum Switching Requirement	10 mA at 17 Vdc	3 mA at 5 Vdc
Coil Characteristics		
Maximum Operating Voltage	110% (AC/DC)	
Maximum Pickup Voltage	80% (AC/DC)	
Drop-out Voltage Threshold	15% (AC); 10% (DC)	
Average Consumption	0.9–1.2 VA (AC); 0.8–1.1 W (DC)	
General Characteristics		
Electrical Life at Rated Load	200,000 operations (where stated)	100,000 operations (general purpose load)
Mechanical Life (Unpowered)	10,000,000 operations	
Operating Time	25 ms max. at 80% rated coil voltage 20 ms max. at 100% rated coil voltage	
Release time	DC: 20 ms max. AC: 35 ms max.	
Impulse Withstand Voltage	2.5 kV (1.2 / 50 µs)	
Dielectric Strength—Between Coil and Contact (AC)	2000 V (rms)	
Dielectric Strength—Between Poles (AC)	1600 V (rms)	
Dielectric Strength—Between Contacts (AC)	1300 V (rms)	
Ambient Air Temperature around the Device—Storage	−40 to +85 °C (−40 to +185 °F)	
Ambient Air Temperature around the Device—Operation	−40 to +55 °C (−40 to +131 °F)	
Vibration Resistance—In Operation	3 gn at 35–150 Hz	
Vibration Resistance—Not Operating	5 gn at 35–150 Hz	
Shock Resistance—In Operation	10 gn	
Shock Resistance—Not Operating	30 gn	
Degree of Protection (Housing Only)	IP40	
Weight	37 g (1.31 oz)	
Agency Approvals	UL with socket, UR (E164862), CE, CSA (225619), RoHS	

Note: Actual product performance may vary depending on application and environmental conditions.

Dimensions, in. (mm)

Clear Cover Dimension

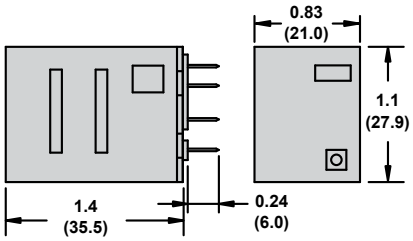

Full-Feature Cover Dimension

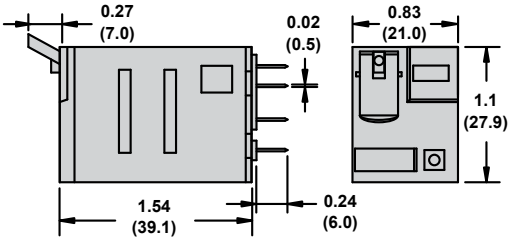

Wiring Diagrams

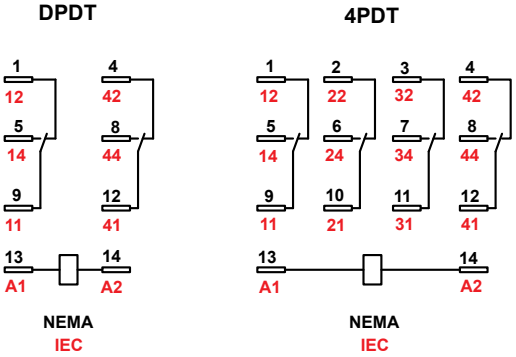

Magnecraft General Purpose Relays

792 Control Series Accessories

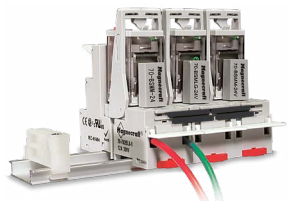

Description

Optional sockets offer customizable, Fingersafe™ solutions including protection modules, hold-down clips, and ID tags. Sockets are DIN rail and panel mount compatible.

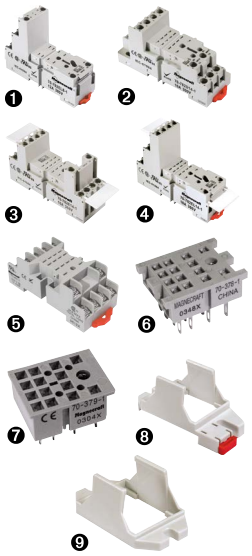

Relay Accessories

Description	Function	For Use with Relays	Pkg. Min.	Standard Part Number
Socket ❶	DIN / Panel mount with elevator terminals	792XBX	10	70-782EL8-1
Socket ❷	DIN / Panel mount with screw terminals and clamping plates	792XBX / 792XDX	10	70-782D14-1
Socket ❸	DIN / Panel mount with rising elevator box terminals		10	70-782E14-1
Socket ❹	DIN / Panel mount with elevator terminals		10	70-782EL14-1
Socket ❺	DIN / Panel mount with screw terminals and clamping plates	792XDX	10	70-461-1
Socket ❻	Solder terminals for chassis mount		10	70-378-1
Socket ❼	Printed circuit terminals for PCB mount		10	70-379-1
Adapter ❽	Mount directly to DIN rail	792XBX / 792XDX	10	16-782C
Adapter ❾	Mount directly to panel		10	16-782C1

Socket Accessories

Description	Function	For Use with Sockets	Coil Voltage	Pkg. Min.	Standard Part Number
Metal Spring Clip ❶	Secures relay in socket	70-782D14-1, 70-782E14-1, 70-782EL14-1, 70-782EL8-1	–	10	16-782SC
Plastic Hold-Down Clip ❷	Secures relay in socket or ejects relay off socket		–	10	16-782PC-1
Write-on Tag ❸	Small write-on tag		–	10	16-782FT-1
Write-on Tag ❹	Write-on tag for 16-782PC-1 hold-down clip	–	–	10	16-700ST-1
Extruded Aluminum DIN Rail, 39.37 in. (1000 mm) ❺	Quick installation and removal of sockets	70-782D14-1, 70-782E14-1, 70-782EL8-1, 70-782EL14-1	–	10	16-700DIN
DIN Rail End Clip ❺	Holds sockets firmly in place on DIN rail	–	–	10	16-DCLIP-1
Insulated Coil Bus Jumper System ❻	Wireless socket connection	70-782EL8-1, 70-782EL14-1	–	10	16-782CBJ-1
Small Socket Module	Protection diode *(protects external drive circuitry from inductive voltages)*	70-782D14-1, 70-782E14-1, 70-782EL14-1, 70-782EL8-1	6 to 250 Vdc	10	70-BSMD-250
Small Socket Module ❼	LED indicator *(provides coil status at a glance)*		24 Vac/Vdc	10	70-BSMLG-24
Small Socket Module	MOV suppressor *(protects from damaging electrical spikes)*		120 Vac/Vdc	10	70-BSMM-120
			24 Vac/Vdc	10	70-BSMM-24
			240 Vac/Vdc	10	70-BSMM-240

Note: Use of an LED socket module can increase coil power draw by up to 10%.

Magnecraft General Purpose Relays

781R Series

SPDT 15 A

UL Listed when used with proper Magnecraft sockets

781R Clear Cover

781R Full-Feature Cover

Description

The 781R Series plug-in relays offer clear or full-feature covers with multiple mounting options and accessories.

Feature	Benefit
15 A max. switching current	Ideal for automation control panels
14 mm width	Slim design saves valuable space
Clear or full-feature cover options	Full-feature covers include LED indicator and locking test button
Socket mount option	Simplifies installation and maintenance while also allowing the use of protection modules, hold-down clips, and other accessories
Gold-flashed contacts	Reduces contact oxidation and increases shelf life
Mechanical flag indicator	Standard feature displays relay status during testing or operation

Contact Rating	Contact Configuration	Nominal Voltage	Coil Resistance (Ω)	Standard Part Number: Clear Cover	Standard Part Number: Clear Cover with LED	Standard Part Number: Full-Feature
15 A	SPDT	12 Vac, 50/60 Hz	44	781XAXRC-12A	781XAXRCL-12A	781XAXRM4L-12A
		24 Vac, 50/60 Hz	177	781XAXRC-24A	781XAXRCL-24A	781XAXRM4L-24A
		48 Vac, 50/60 Hz	708	781XAXRC-48A	781XAXRCL-48A	781XAXRM4L-48A
		120 Vac, 50/60 Hz	4430	781XAXRC-120A	781XAXRCL-120A	781XAXRM4L-120A
		240 Vac, 50/60 Hz	17720	781XAXRC-240A	781XAXRCL-240A	781XAXRM4L-240A
		12 Vdc	115	781XAXRC-12D	781XAXRCL-12D	781XAXRM4L-12D
		24 Vdc	450	781XAXRC-24D	781XAXRCL-24D	781XAXRM4L-24D
		48 Vdc	1800	781XAXRC-48D	781XAXRCL-48D	781XAXRM4L-48D
		110 Vdc	9460	781XAXRC-110D	781XAXRCL-110D	781XAXRM4L-110D

Part Number Explanation

781 **XAXR** **M4L** - **24D**

Series:
781 = 781R Series Relay

Contact Configuration:
XAXR = SPDT

Cover Options:
C = Clear Cover
CL = Clear Cover and LED
M4L = Locking Push Button and LED

Coil Voltages:
12–240A = 12–240 Vac
12–110D = 12–110 Vdc

Please contact Customer Service for more information (847-441-2540).

Specifications

Part Number	781XAXR
Contact Characteristics	
Terminal Style	Blade
Contact Material	Silver Alloy
Contact Configuration	SPDT
Carrying Current	15 A
Maximum Switching Voltage	IEC: 250 Vac / 28 Vdc UL/CSA: 300 Vac / 28 Vdc
Rated Switching Current at Voltage (Conforming to IEC AC-1 and DC-1)	NO: 15 A at 250 Vac; NC: 7.5 A at 250 Vac NO: 15 A at 28 Vdc; NC: 7.5 A at 28 Vdc
Rated Switching Current at Voltage (Conforming to UL)	**Resistive:** 15 A at 277 Vac, 50/60 Hz, 100 k cycles 15 A at 28 Vdc, 100 k cycles **Motor:** 1/2 hp at 120 Vac, 1 k cycles 1 hp at 277 Vac, 1 k cycles **Pilot Duty:** B300
Rated Switching Current at Voltage (Conforming to CSA)	**Resistive:** 15 A at 150 Vac, 50/60 Hz, 100 k cycles 10 A at 277 Vdc, 100 k cycles 15 A at 28 Vdc, 100 k cycles **Motor:** 1/2 hp at 120 Vac, 1 k cycles 1 hp at 277 Vac, 1 k cycles **Pilot Duty:** B300
Minimum Switching Requirement	10 mA at 17 Vdc
Coil Characteristics	
Maximum Operating Voltage	110% (AC/DC)
Maximum Pickup Voltage	85% (AC/DC)
Drop-out Voltage Threshold	15% (AC); 10% (DC)
Average Consumption	Standard: 1.6 VA (AC); 1.1 W (DC) With LED: 1.9 VA (AC); 1.4 W (DC)
General Characteristics	
Electrical Life at Rated Load	100,000 operations
Mechanical Life (Unpowered)	10,000,000 operations
Operating Time (Response Time)	20 ms
Dielectric Strength—Between Coil and Contact (AC)	2000 V (rms)
Dielectric Strength—Between Poles (AC)	2000 V (rms)
Dielectric Strength—Between Contacts (AC)	1500 V (rms)
Ambient Air Temperature around the Device—Storage	−40 to +85 °C (−40 to +185 °F)
Ambient Air Temperature around the Device—Operation	−40 to +55 °C (−40 to +131 °F)
Vibration Resistance—In Operation	±1 mm (10–35 Hz) and 3 gn (35–150 Hz)
Shock Resistance	15 gn
Degree of Protection (Housing Only)	IP40
Weight	29 g (1.02 oz)
Agency Approvals	UL with socket, UR (E164862), CE, CSA (225619), RoHS

Note: Actual product performance may vary depending on application and environmental conditions.

Dimensions, in. (mm)

Clear Cover Dimensions

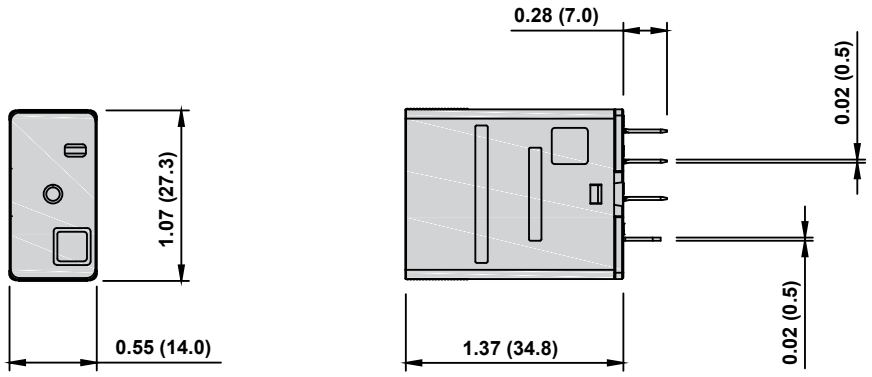

Full-Feature Cover Dimensions

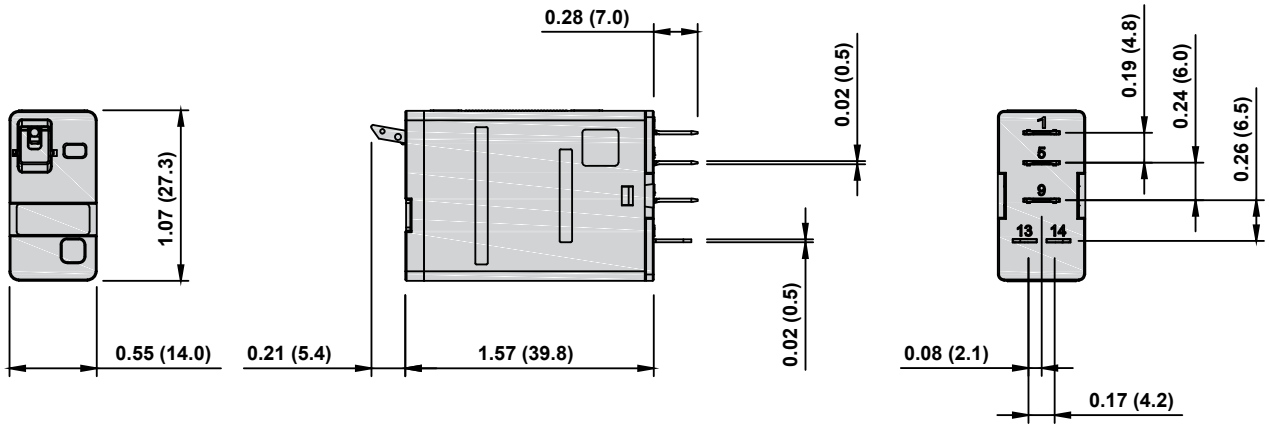

Wiring Diagram

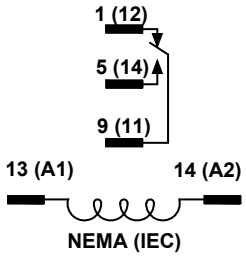

Magnecraft General Purpose Relays

781R Series Accessories

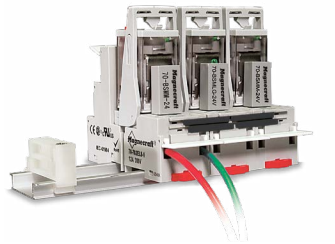

Description

Optional sockets offer customizable, Fingersafe solutions including protection modules, hold-down clips, and ID tags. Sockets are DIN rail and panel mount compatible.

Relay Accessories

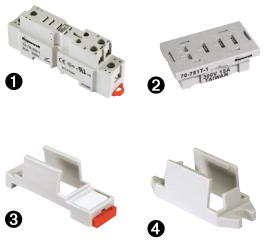

Description	Function	For Use with Relays	Pkg. Min.	Standard Part Number
Socket ❶	DIN / Panel mount with screw terminals and clamping plates	781XAXR	10	70-781D5R-1A
Socket ❷	PCB-mount socket		10	70-781T-1
Adapter ❸	Mount directly to DIN rail		10	16-781C
Adapter ❹	Mount directly to panel		10	16-781C1

Socket Accessories

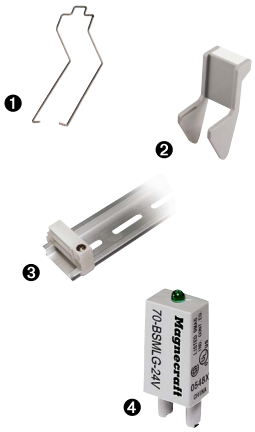

Description	Function	For Use with Sockets	Coil Voltage	Pkg. Min.	Standard Part Number
Metal Spring Clip ❶	Secures relay in socket	70-781D5R-1A, 70-781T-1	–	10	16-781SC
Plastic ID Hold-Down Clip ❷	Secures relay in socket and provides labeling	70-781D5R-1A	–	10	16-781IDC
Extruded Aluminum DIN Rail, 39.37 in. (1000 mm) ❸	Quick installation and removal of sockets		–	10	16-700DIN
DIN Rail End Clip ❸	Holds sockets firmly in place on DIN rail	–	–	10	16-DCLIP-1
Small Socket Module	Protection diode *(protects external drive circuitry from inductive voltages)*	70-781D5R-1A	6 to 250 Vdc	10	70-BSMD-250
Small Socket Module ❹	LED indicator *(provides coil status at a glance)*		24 Vac/Vdc	10	70-BSMLG-24
Small Socket Module	MOV suppressor *(protects from damaging electrical spikes)*		120 Vac/Vdc	10	70-BSMM-120
			24 Vac/Vdc	10	70-BSMM-24
			240 Vac/Vdc	10	70-BSMM-240

Note: Use of a LED socket module can increase coil power draw by up to 10%.

Magnecraft General Purpose Relays

782 Power Series

DPDT 15 A

UL Listed when used with proper Magnecraft sockets

782 Clear Cover

782 Full-Feature Cover

Description

The 782 Plug-in Power relays offer clear or full-feature covers with multiple mounting options and accessories.

Feature	Benefit
15 A switching current	Ideal for automation control panels
Clear or full-feature cover options	Full-feature covers include LED indicator and locking test button
Socket mount option	Simplifies installation and maintenance while also allowing the use of protection modules, hold-down clips, and other accessories
Gold-flashed contacts	Reduces contact oxidation and increases shelf life
Mechanical flag indicator	Standard feature displays relay status during testing or operation

Contact Rating	Contact Configuration	Nominal Voltage	Coil Resistance (Ω)	Standard Part Number: Clear Cover	Standard Part Number: Clear Cover with LED	Standard Part Number: PC Mount	Standard Part Number: Full-Feature
15 A	DPDT	6 Vac, 50/60 Hz	11	–	–	782XBXCT-6A	–
		12 Vac, 50/60 Hz	44	782XBXC-12A	782XBXCL-12A	782XBXCT-12A	782XBXM4L-12A
		24 Vac, 50/60 Hz	177	782XBXC-24A	782XBXCL-24A	782XBXCT-24A	782XBXM4L-24A
		48 Vac, 50/60 Hz	708	782XBXC-48A	782XBXCL-48A	782XBXCT-48A	782XBXM4L-48A
		120 Vac, 50/60 Hz	4430	782XBXC-120A	782XBXCL-120A	782XBXCT-120A	782XBXM4L-120A
		240 Vac, 50/60 Hz	17720	782XBXC-240A	782XBXCL-240A	782XBXCT-240A	782XBXM4L-240A
		6 Vdc	40	–	–	782XBXCT-6D	–
		12 Vdc	160	782XBXC-12D	782XBXCL-12D	782XBXCT-12D	782XBXM4L-12D
		24 Vdc	640	782XBXC-24D	782XBXCL-24D	782XBXCT-24D	782XBXM4L-24D
		48 Vdc	2560	782XBXC-48D	782XBXCL-48D	782XBXCT-48D	782XBXM4L-48D
		110 Vdc	13440	782XBXC-110D	782XBXCL-110D	782XBXCT-110D	782XBXM4L-110D

Part Number Explanation

782 **XBX** **M4L** - **24D**

Series:
782 = 782 Series Power Relay

Contact Configuration:
XBX = DPDT

Cover Options:
C = Clear Cover
CL = Clear Cover and LED
CT = PC Termimals
M4L = Locking Push Button and LED

Coil Voltages:
6–240A = 6–240 Vac
6–110D = 6–110 Vdc

Please contact Customer Service for more information (847-441-2540).

Specifications

Part Number	782XBXC / CL / M4L	782XBXCT
Contact Characteristics		
Terminal Style	Blade	PC Terminals
Contact Material	Silver Alloy	
Contact Configuration	DPDT	
Carrying Current	15 A	
Maximum Switching Voltage	IEC: 250 Vac / 28 Vdc UL/CSA: 300 Vac / 28 Vdc	
Rated Switching Current at Voltage (Conforming to IEC AC-1 and DC-1)	NO: 15 A at 250 Vac, NC: 7.5 A at 250 Vac NO: 15 A at 28 Vdc, NC: 7.5 A at 28 Vdc	
Rated Switching Current at Voltage (Conforming to UL)	**Resistive:** 15 A at 277 Vac, 50/60 Hz, 100 k cycles 15 A at 28 Vdc, 100 k cycles **Motor:** 1/2 hp at 120 Vac, 1 k cycles 1 hp at 277 Vac, 1 k cycles **Pilot Duty:** B300	
Rated Switching Current at Voltage (Conforming to CSA)	**Resistive:** 15 A at 150 Vac, 50/60 Hz, 100 k cycles 10 A at 277 Vac, 50/60 Hz, 100 k cycles 15 A at 28 Vdc, 100 k cycles **Motor:** 1/2 hp at 120 Vac, 1 k cycles 1 hp at 277 Vac, 1 k cycles **Pilot Duty:** B300	
Minimum Switching Requirement	10 mA at 17 Vdc	
Coil Characteristics		
Maximum Operating Voltage	110% (AC/DC)	
Maximum Pickup Voltage	85% (AC); 80% (DC)	
Drop-out Voltage Threshold	15% (AC); 10% (DC)	
Average Consumption	Standard: 1.1 VA (AC); 0.85 W (DC) With LED: 1.4 VA (AC); 1.15 W (DC)	Standard: 1.1 VA (AC); 0.85 W (DC)
General Characteristics		
Electrical Life at Rated Load	100,000 operations	
Mechanical Life (Unpowered)	10,000,000 operations	
Operating Time (Response Time)	20 ms	
Dielectric Strength—Between Coil and Contact (AC)	2000 V (rms)	
Dielectric Strength—Between Poles (AC)	2000 V (rms)	
Dielectric Strength—Between Contacts (AC)	1500 V (rms)	
Ambient Air Temperature around the Device—Storage	−40 to +85 °C (−40 to +185 °F)	
Ambient Air Temperature around the Device—Operation	−40 to +55 °C (−40 to +131 °F)	
Vibration Resistance—In Operation	±1 mm (10–35 Hz) and 3 gn (35–150 Hz)	
Shock Resistance	15 gn	
Degree of Protection (Housing Only)	IP40	
Weight	36 g (1.27 oz)	
Agency Approvals	UL with socket, UR (E164862), CE, CSA (225619), RoHS	

Note: Actual product performance may vary depending on application and environmental conditions.

Dimensions, in. (mm)

Clear Cover Dimensions

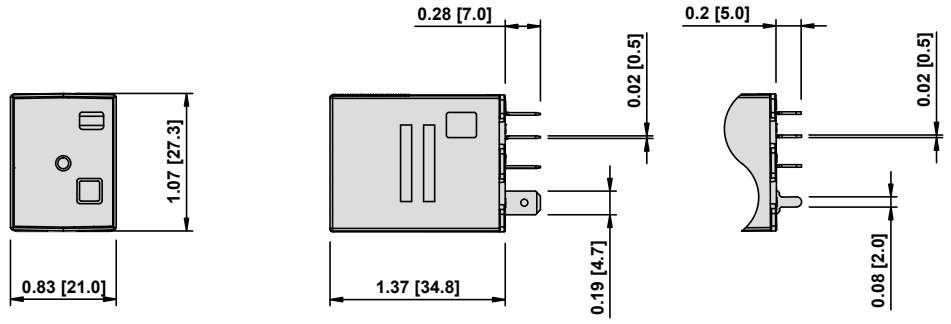

PC Terminals Dimensions

Full-Feature Cover Dimensions

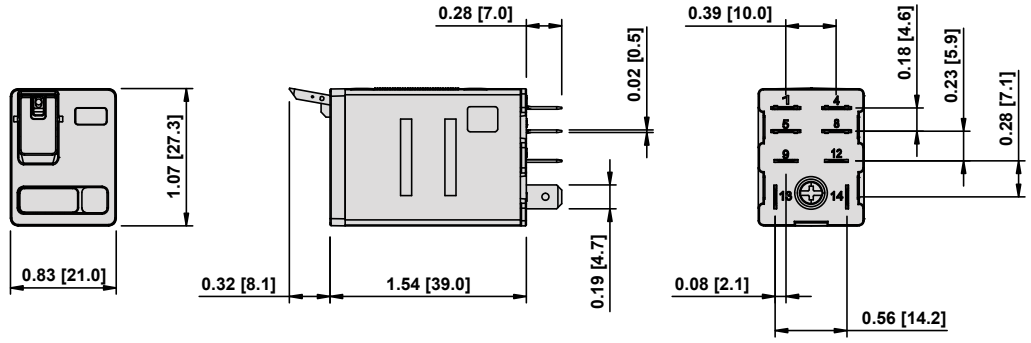

Wiring Diagram

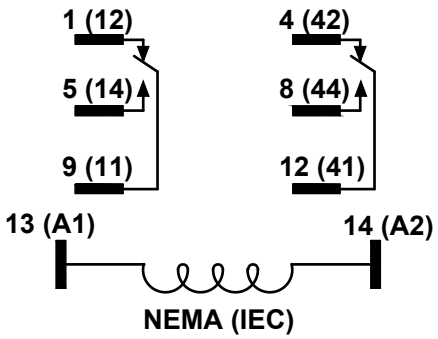

Magnecraft General Purpose Relays

782 Power Series Accessories

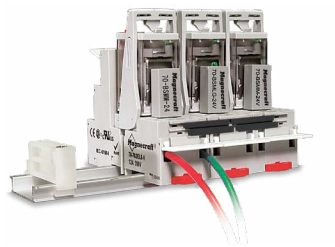

Description

Optional sockets offer customizable, Fingersafe solutions including protection modules, hold-down clips, and ID tags. Sockets are DIN rail and panel mount compatible.

Relay Accessories

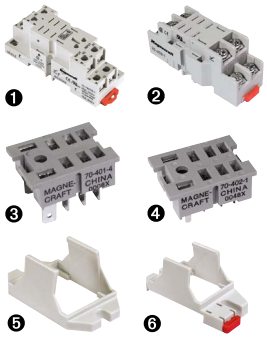

Description	Function	For Use with Relays	Pkg. Min.	Standard Part Number
Socket ❶	DIN / Panel mount with screw terminals and clamping plates	782XBX	10	70-782D8-1A
Socket ❷	DIN / Panel mount with screw terminals and clamp-ing plates		10	70-459-1
Socket ❸	Quick Connect terminals for chassis mount		10	70-401-1
Socket ❹	Printed circuit terminals for PCB mount		10	70-402-1
Adapter ❺	Mount directly to panel		10	16-782C1
Adapter ❻	Mount directly to DIN rail		10	16-782C

Socket Accessories

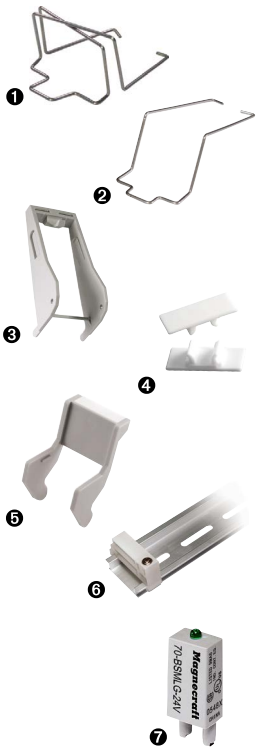

Description	Function	For Use with Sockets	Coil Voltage	Pkg. Min.	Standard Part Number
Metal Spring Clip ❶ ❷	Secures relay in socket	70-782D8-1A, 70-459-1, 70-401-1, 70-402-1	–	10	16-1342
Plastic Hold-Down Clip ❸	Secures relay in socket or ejects relay off socket	70-782D8-1A	–	10	16-782PC-1
Write-on Tag ❹	Write-on tag for 16-782PC-1 hold-down clip	–	–	10	16-700ST-1
Plastic ID Hold-Down Clip ❺	Secures relay in socket and provides labeling	70-782D8-1A, 70-459-1, 70-401-1, 70-402-1	–	10	16-782IDC
Extruded Aluminum DIN Rail, 39.37 in. (1000 mm) ❻	Quick installation and removal of sockets	70-782D8-1A, 70-459-1	–	10	16-700DIN
DIN Rail End Clip ❻	Holds sockets firmly in place on DIN rail		–	10	16-DCLIP-1
Small Socket Module	Protection diode *(protects external drive circuitry from inductive voltages)*	70-782D8-1A	6 to 250 Vdc	10	70-BSMD-250
Small Socket Module ❼	LED indicator *(provides coil status at a glance)*		24 Vac/Vdc	10	70-BSMLG-24
Small Socket Module	MOV suppressor *(protects from damaging electrical spikes)*		120 Vac/Vdc	10	70-BSMM-120
			24 Vac/Vdc	10	70-BSMM-24
			240 Vac/Vdc	10	70-BSMM-240

Note: Use of an LED socket module can increase coil power draw by up to 10%.

Magnecraft General Purpose Relays

783 Series

3PDT 15 A

UL Listed when used with proper Magnecraft sockets

783 Clear Cover

783 Full-Feature Cover

Description

The 783 Series plug-in relays offer clear or full-feature covers with multiple mounting options and accessories.

Feature	Benefit
15 A max. switching current	Ideal for automation panels and controls
Clear or full-feature cover options	Full-feature covers include LED indicator and locking test button
3PDT contact configuration	Simultaneously control up to 3 separate circuits
Socket mount option	Simplifies installation and maintenance while also allowing the use of protection modules, hold-down clips, and other accessories
Gold-flashed contacts	Reduces contact oxidation and increases shelf life
Mechanical flag indicator	Standard feature displays relay status during testing or operation

Contact Rating	Contact Configuration	Nominal Voltage	Coil Resistance (Ω)	Standard Part Number: Clear Cover	Standard Part Number: Clear Cover with LED	Standard Part Number: Full-Feature
15 A	3PDT	12 Vac, 50/60 Hz	30	783XCXC-12A	783XCXCL-12A	783XCXM4L-12A
		24 Vac, 50/60 Hz	110	783XCXC-24A	783XCXCL-24A	783XCXM4L-24A
		48 Vac, 50/60 Hz	460	783XCXC-48A	783XCXCL-48A	783XCXM4L-48A
		120 Vac, 50/60 Hz	2880	783XCXC-120A	783XCXCL-120A	783XCXM4L-120A
		240 Vac, 50/60 Hz	11300	783XCXC-240A	783XCXCL-240A	783XCXM4L-240A
		12 Vdc	80	783XCXC-12D	783XCXCL-12D	783XCXM4L-12D
		24 Vdc	320	783XCXC-24D	783XCXCL-24D	783XCXM4L-24D
		48 Vdc	1280	783XCXC-48D	783XCXCL-48D	783XCXM4L-48D
		110 Vdc	6720	783XCXC-110D	783XCXCL-110D	783XCXM4L-110D

Part Number Explanation

783 XCX M4L - 24D

Series:
783 = 783 Series Relay

Contact Configuration:
XCX = 3PDT

Cover Options:
C = Clear Cover
CL = Clear Cover and LED
M4L = Locking Push Button and LED

Coil Voltages:
12–240A = 12–240 Vac
12–110D = 12–110 Vdc

Please contact Customer Service for more information (847-441-2540).

Specifications

Part Number	783XCX
Contact Characteristics	
Terminal Style	Blade
Contact Material	Silver Alloy
Contact Configuration	3PDT
Carrying Current per Pole	15 A
Maximum Switching Voltage	IEC: 250 Vac / 28 Vdc UL/CSA: 300 Vac / 28 Vdc
Rated Switching Current (Conforming to IEC AC-1 and DC-1)	NO: 15 A at 250 Vac, NC: 7.5 A at 250 Vac NO: 15 A at 28 Vdc, NC: 7.5 A at 28 Vdc
Rated Switching Current (Conforming to UL)	**Resistive:** 15 A at 277 Vac, 50/60 Hz, 100 k cycles 15 A at 28 Vdc, 100 k cycles **Motor:** 1/2 hp at 120 Vac, 1 k cycles 1 hp at 277 Vac, 1 k cycles **Pilot Duty:** B300
Rated Switching Current (Conforming to CSA)	**Resistive**: 15 A at 150 Vac, 50/60 Hz, 100 k cycles, 30 A max. total 10 A at 277 Vac, 50/60 Hz, 100 k cycles, 20 A max. total 15 A at 28 Vdc, 100 k cycles, 30 A max. total **Motor**: 1/2 hp at 120 Vac, 1 k cycles 1 hp at 277 Vac, 1 k cycles, 2 hp max. total **Pilot Duty**: B300
Minimum Switching Requirement	10 mA at 17 Vdc
Coil Characteristics	
Maximum Operating Voltage	110% (AC/DC)
Maximum Pickup Voltage	85% (AC); 80% (DC)
Drop-out Voltage Threshold	15% (AC); 10% (DC)
Average Consumption	Standard: 1.7 VA (AC); 1.5 W (DC) With LED: 2.05 VA (AC); 1.85 W (DC)
General Characteristics	
Electrical Life at Rated Load	100,000 operations
Mechanical Life (Unpowered)	10,000,000 operations
Operating Time	20 ms
Dielectric Strength—Between Coil and Contact (AC)	2000 V (rms)
Dielectric Strength—Between Poles (AC)	2000 V (rms)
Dielectric Strength—Between Contacts (AC)	1500 V (rms)
Ambient Air Temperature around the Device—Storage	−40 to +85 °C (−40 to +185 °F)
Ambient Air Temperature around the Device—Operation	−40 to +55 °C (−40 to +131 °F)
Vibration Resistance—In Operation	±1 mm (10–35 Hz) and 3 gn (35–150 Hz)
Shock Resistance	15 gn
Degree of Protection (Housing Only)	IP40
Weight	60 g (2.12 oz)
Agency Approvals	UL with socket, UR (E164862), CE, CSA (225619), RoHS

Note: Actual product performance may vary depending on application and environmental conditions.

Magnecraft General Purpose Relays

783 Series
3PDT 15 A

Dimensions, in. (mm)

Clear Cover Dimensions

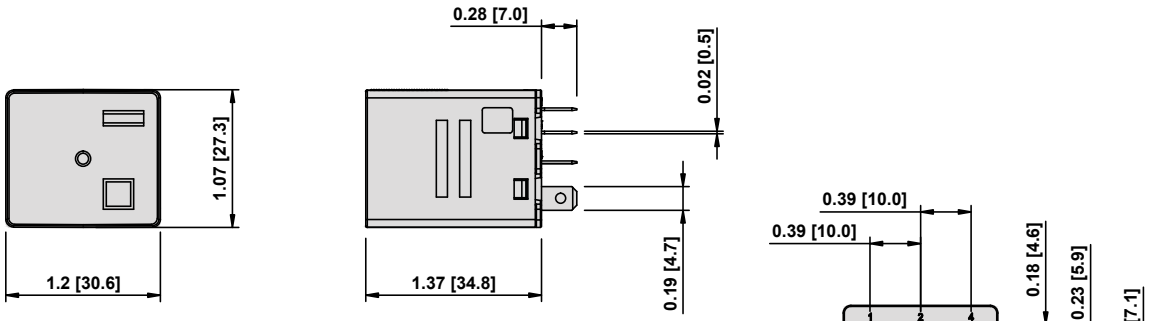

Full-Feature Cover Dimensions

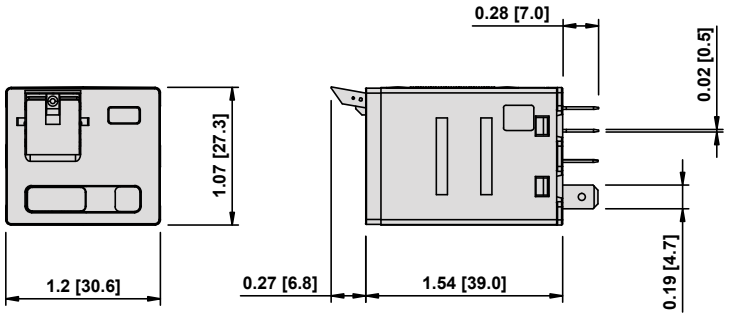

Wiring Diagram

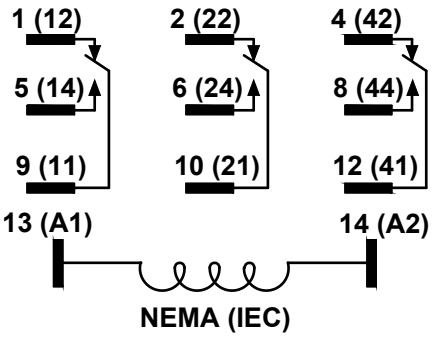

Magnecraft General Purpose Relays

783 Series Accessories

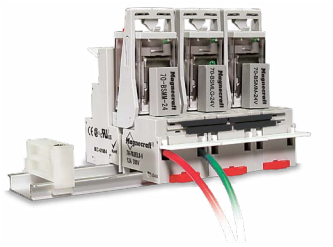

Description

Optional sockets offer customizable, Fingersafe solutions including protection modules, hold-down clips, and ID tags. Sockets are DIN rail and panel mount compatible.

Relay Accessories

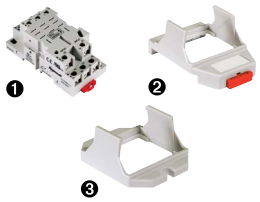

Description	Function	For Use with Relays	Pkg. Min.	Standard Part Number
Socket ❶	Fingersafe, DIN / Panel mount with screw terminals and clamping plates	783XCX	10	70-783D11-1A
Adapter ❷	Mount directly to DIN rail		10	16-783C
Adapter ❸	Mount directly to panel		10	16-783C1

Socket Accessories

Description	Function	For Use with Sockets	Coil Voltage	Pkg. Min.	Standard Part Number
Metal Spring Clip ❶	Secures relay in socket	70-783D11-1A	–	10	16-783SC
Plastic ID Hold-Down Clip ❷	Secures relay in socket and provides labeling		–	10	16-783IDC
Extruded Aluminum DIN Rail, 39.37 in. (1000 mm) ❸	Quick installation and removal of sockets		–	10	16-700DIN
DIN Rail End Clip ❸	Holds sockets firmly in place on DIN rail	–	–	10	16-DCLIP-1
Large Socket Module	MOV suppressor *(protects from damaging electrical spikes)*	70-783D11-1A	24 Vac/Vdc	10	70-ASMM-24
Large Socket Module	Protection diode *(protects external drive circuitry from inductive voltages)*		250 Vdc	10	70-ASMD-250
Large Socket Module ❹	LED indicator *(provides coil status at a glance)*		110/240 Vac/ Vdc	10	70-ASMLG-110/240
Large Socket Module	RC suppressor *(snubs back EMF of relay coil)*		110/240 Vac	10	70-ASMR-110/240

Note: Use of an LED or RC socket module can increase coil power draw by up to 10%.

Magnecraft General Purpose Relays

784 Series

4PDT 15 A

UL Listed when used with proper Magnecraft sockets

784 Clear Cover

784 Full-Feature Cover

Description

The 784 Series plug-in relays offer clear or full-feature covers with multiple mounting options and accessories.

Feature	Benefit
15 A max. switching current	Ideal for automation panels and controls
Clear or full-feature cover options	Full-feature covers include LED indicator and locking test button
4PDT contact configuration	Simultaneously control up to 4 separate circuits
Socket mount option	Simplifies installation and maintenance while also allowing the use of protection modules, hold-down clips, and other accessories
Gold-flashed contacts	Reduces contact oxidation and increases shelf life
Mechanical flag indicator	Standard feature displays relay status during testing or operation

Contact Rating	Contact Configuration	Nominal Voltage	Coil Resistance (Ω)	Standard Part Number: Clear Cover	Standard Part Number: Clear Cover with LED	Standard Part Number: Full-Feature
15 A	3PDT	12 Vac, 50/60 Hz	20	784XDXC-12A	784XDXCL-12A	784XDXM4L-12A
		24 Vac, 50/60 Hz	80	784XDXC-24A	784XDXCL-24A	784XDXM4L-24A
		48 Vac, 50/60 Hz	310	784XDXC-48A	784XDXCL-48A	784XDXM4L-48A
		120 Vac, 50/60 Hz	2100	784XDXC-120A	784XDXCL-120A	784XDXM4L-120A
		240 Vac, 50/60 Hz	8000	784XDXC-240A	784XDXCL-240A	784XDXM4L-240A
		12 Vdc	76	784XDXC-12D	784XDXCL-12D	784XDXM4L-12D
		24 Vdc	303	784XDXC-24D	784XDXCL-24D	784XDXM4L-24D
		48 Vdc	1210	784XDXC-48D	784XDXCL-48D	784XDXM4L-48D
		110 Vdc	6370	784XDXC-110D	784XDXCL-110D	784XDXM4L-110D

Part Number Explanation

784 **XDX** **M4L** - **24D**

Series:
784 = 784 Series Relay

Contact Configuration:
XDX = 4PDT

Cover Options:
C = Clear Cover
CL = Clear Cover and LED
M4L = Locking Push Button and LED

Coil Voltages:
12–240A = 12–240 Vac
12–110D = 12–110 Vdc

Please contact Customer Service for more information (847-441-2540).

Specifications

Part Number	784XDX
Contact Characteristics	
Terminal Style	Blade
Contact Material	Silver Alloy
Contact Configuration	4PDT
Carrying Current per Pole	15 A
Maximum Switching Voltage	IEC: 250 Vac / 28 Vdc UL/CSA: 300 Vac / 28 Vdc
Rated Switching Current (Conforming to IEC AC-1 and DC-1)	NO: 15 A at 250 Vac, NC: 7.5 A at 250 Vac NO: 15 A at 28 Vdc, NC: 7.5 A at 28 Vdc
Rated Switching Current (Conforming to UL)	**Resistive:** 15 A at 277 Vac, 50/60 Hz, 100 k cycles 15 A at 28 Vdc, 100 k cycles **Motor:** 1/2 hp at 120 Vac, 1 k cycles 1 hp at 277 Vac, 1 k cycles **Pilot Duty:** B300
Rated Switching Current (Conforming to CSA)	**Resistive**: 15 A at 150 Vac, 50/60 Hz, 100 k cycles, 30 A max. total 10 A at 277 Vac, 50/60 Hz, 100 k cycles, 20 A max. total 15 A at 28 Vdc, 100 k cycles, 30 A max. total **Motor**: 1/2 hp at 120 Vac, 1 k cycles 1 hp at 277 Vac, 1 k cycles, 2 hp max. total **Pilot Duty**: B300
Minimum Switching Requirement	10 mA at 17 Vdc
Coil Characteristics	
Maximum Operating Voltage	110% (AC/DC)
Maximum Pickup Voltage	85% (AC); 80% (DC)
Drop-out Voltage Threshold	15% (AC); 10% (DC)
Average Consumption	Standard: 2.5 VA (AC); 1.6 W (DC) With LED: 2.85 VA (AC); 1.95 W (DC)
General Characteristics	
Electrical Life at Rated Load	100,000 operations
Mechanical Life (Unpowered)	10,000,000 operations
Operating Time	20 ms
Dielectric Strength—Between Coil and Contact (AC)	2000 V (rms)
Dielectric Strength—Between Poles (AC)	2000 V (rms)
Dielectric Strength—Between Contacts (AC)	1500 V (rms)
Ambient Air Temperature around the Device—Storage	−40 to +85 °C (−40 to +185 °F)
Ambient Air Temperature around the Device—Operation	−40 to +55 °C (−40 to +131 °F)
Vibration Resistance—In Operation	±1 mm (10–35 Hz) and 3 gn (35–150 Hz)
Shock Resistance	15 gn
Degree of Protection (Housing Only)	IP40
Weight	80 g (2.82 oz)
Agency Approvals	UL with socket, UR (E164862), CE, CSA (225619), RoHS

Note: Actual product performance may vary depending on application and environmental conditions.

Dimensions, in. (mm)

Clear Cover Dimensions

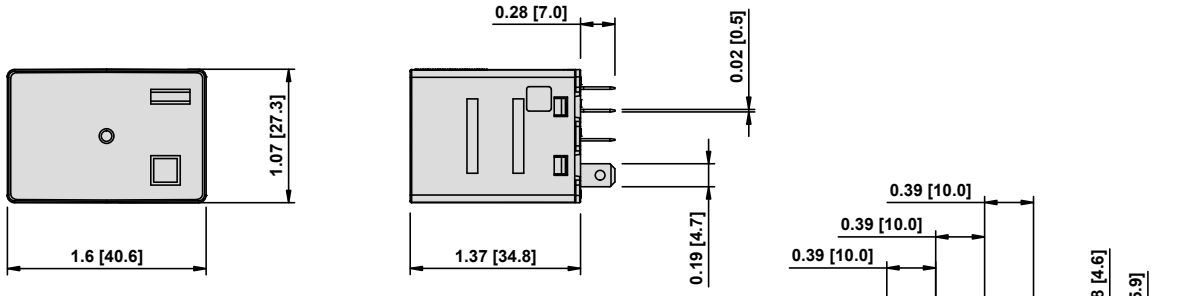

Full-Feature Cover Dimensions

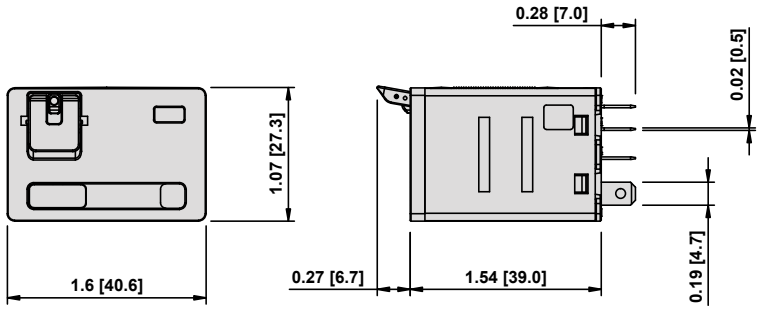

Wiring Diagram

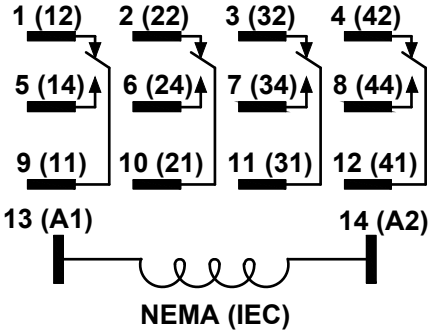

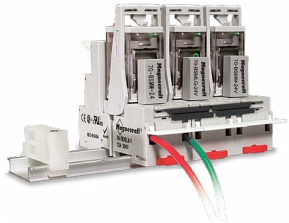

Description

Optional sockets offer customizable, Fingersafe solutions including protection modules, hold-down clips, and ID tags. Sockets are DIN rail and panel mount compatible.

Relay Accessories

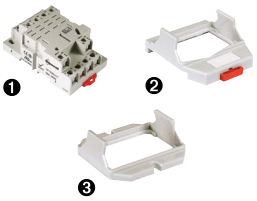

Description	Function	For Use with Relays	Pkg. Min.	Standard Part Number
Socket ❶	Fingersafe, DIN / Panel mount with screw terminals and clamping plates	784XDX	10	70-784D14-1
Adapter ❷	DIN rail adapter		10	16-784C
Adapter ❸	Flange mount adapter		10	16-784C1

Socket Accessories

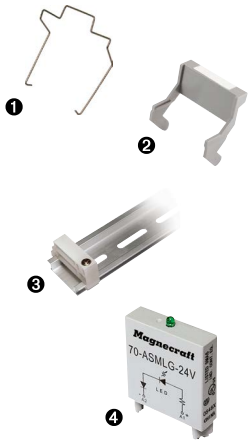

Description	Function	For Use with Socket	Coil Voltage	Pkg. Min.	Standard Part Number
Metal Spring Clip ❶	Secures relay in socket	70-784D14-1	–	10	16-784SC
Plastic ID Hold-Down Clip ❷	Secures relay in socket and provides labeling		–	10	16-784IDC
Extruded Aluminum DIN Rail, 39.37 in. (1000 mm) ❸	Quick installation and removal of sockets		–	10	16-700DIN
DIN Rail End Clip ❸	Holds sockets firmly in place on DIN rail	–	–	10	16-DCLIP-1
Large Socket Module	MOV suppressor *(protects from damaging electrical spikes)*	70-784D14-1	24 Vac/Vdc	10	70-ASMM-24
Large Socket Module	Protection diode *(protects external drive circuitry from inductive voltages)*		250 Vdc	10	70-ASMD-250
Large Socket Module ❹	LED indicator *(provides coil status at a glance)*		110/240 Vac/Vdc	10	70-ASMLG-110/240
Large Socket Module	RC suppressor *(snubs back EMF of relay coil)*		110/240 Vac	10	70-ASMR-110/240

Note: Use of an LED or RC socket module can increase coil power draw by up to 10%.

Magnecraft General Purpose Relays

750R Series

DPDT and 3DPT, 10 A

UL Listed when used with proper Magnecraft sockets

750R Clear Cover

750R Full-Feature Cover

Description

The 750R series octal base, plug-in relays offer clear or full-feature covers with multiple mounting options and accessories.

Feature	Benefit
Octal style mounting	Robust and historically proven mounting platform that provides excellent structural support
10 A max. switching current	Ideal for automation panels and controls
Clear or full-feature cover options	Full-feature covers include LED indicator and locking test button
DPDT and 3PDT contact configurations	Simultaneously control separate circuits
Socket mount option	Simplifies installation and maintenance while also allowing the use of protection modules, hold-down clips, and other accessories
Gold-flashed contacts	Reduces contact oxidation and increases shelf life
Mechanical flag indicator	Standard feature displays relay status during testing or operation

Contact Rating	Contact Configuration	Nominal Voltage	Coil Resistance (Ω)	Standard Part Number: Clear Cover	Standard Part Number: Clear Cover with LED	Standard Part Number: Full-Feature
10 A	DPDT	6 Vac, 50/60 Hz	3.9	750XBXRC-6A	–	–
		12 Vac, 50/60 Hz	16.9	750XBXRC-12A	750XBXRCL-12A	750XBXRM4L-12A
		24 Vac, 50/60 Hz	72	750XBXRC-24A	750XBXRCL-24A	750XBXRM4L-24A
		48 Vac, 50/60 Hz	290	–	–	750XBXRM4L-48A
		120 Vac, 50/60 Hz	1700	750XBXRC-120A	750XBXRCL-120A	750XBXRM4L-120A
		240 Vac, 50/60 Hz	6800	750XBXRC-240A	750XBXRCL-240A	750XBXRM4L-240A
		6 Vdc	3.9	750XBXRC-6D	–	750XBXRM4L-6D
		12 Vdc	120	750XBXRC-12D	750XBXRCL-12D	750XBXRM4L-12D
		24 Vdc	470	750XBXRC-24D	750XBXRCL-24D	750XBXRM4L-24D
		48 Vdc	1800	750XBXRC-48D	750XBXRCL-48D	750XBXRM4L-48D
		110 Vdc	7300	750XBXRC-110D	750XBXRCL-110D	750XBXRM4L-110D
	3PDT	24 Vac, 50/60 Hz	72	750XCXRC-24A	750XCXRCL-24A	750XCXRM4L-24A
		48 Vac, 50/60 Hz	290	–	–	750XCXRM4L-48A
		120 Vac, 50/60 Hz	1700	750XCXRC-120A	750XCXRCL-120A	750XCXRM4L-120A
		240 Vac, 50/60 Hz	6800	750XCXRC-240A	750XCXRCL-240A	750XCXRM4L-240A
		12 Vdc	120	750XCXRC-12D	750XCXRCL-12D	750XCXRM4L-12D
		24 Vdc	470	750XCXRC-24D	750XCXRCL-24D	750XCXRM4L-24D
		48 Vdc	1800	750XCXRC-48D	750XCXRCL-48D	750XCXRM4L-48D
		110 Vdc	7300	750XCXRC-110D	750XCXRCL-110D	750XCXRM4L-110D

Part Number Explanation

750 **XBXR** **M4L** - **24D**

Series:
750 = 750R Series Relay

Contact Configuration:
XBXR = DPDT
XCXR = 3PDT

Cover Options:
C = Clear Cover
CL = Clear Cover and LED
M4L = Locking Push Button and LED

Coil Voltages:
6–240A = 6–240 Vac
6–110D = 6–110 Vdc

Please contact Customer Service for more information (847-441-2540).

Specifications

Part Number	750XBXR	750XCXR
Contact Characteristics		
Terminal Style	Octal	Octal
Contact Material	Silver Alloy	Silver Alloy
Contact Configuration	DPDT	3PDT
Carrying Current	10 A	10 A
Maximum Switching Voltage	IEC: 250 Vac / 28 Vdc UL/CSA: 300 Vac / 30 Vdc	IEC: 250 Vac / 28 Vdc UL/CSA: 300 Vac / 30 Vdc
Rated Switching Current (Conforming to IEC AC-1 and DC-1)	NO: 10 A at 250 Vac / 28 Vdc NC: 5 A at 250 Vac / 28 Vdc	NO: 10 A at 250 Vac / 28 Vdc NC: 5 A at 250 Vac / 28 Vdc
Rated Switching Current (Conforming to UL)	**Resistive:** 10 A at 277 Vac, 50/60 Hz, 200 k cycles 10 A at 30 Vdc, 200 k cycles **Motor:** 1/3 hp at 120 Vac, 6 k cycles 1 hp at 277 Vac, 6 k cycles **Pilot Duty:** B300, 6 k cycles	**Resistive:** 10 A at 277 Vac, 50/60 Hz, 200 k cycles 10 A at 30 Vdc, 200 k cycles **Motor:** 1/3 hp at 120 Vac, 6 k cycles 1 hp at 277 Vac, 6 k cycles **Pilot Duty:** B300, 6 k cycles
Minimum Switching Requirement	10 mA at 17 Vdc	10 mA at 17 Vdc
Coil Characteristics		
Maximum Operating Voltage	110% (AC/DC)	
Maximum Pickup Voltage	85% (AC); 80% (DC)	
Drop-out Voltage Threshold	15% (AC); 10% (DC)	
Average Consumption	3 VA (AC); 1.4 W (DC)	
General Characteristics		
Electrical Life at Rated Load	100,000 operations	
Mechanical Life	5,000,000 operations	
Operating Time	20 ms	
Dielectric Strength—Between Coil and Contact (AC)	2500 V (rms)	
Dielectric Strength—Between Poles (AC)	2000 V (rms)	
Dielectric Strength—Between Contacts (AC)	1500 V (rms)	
Ambient Air Temperature around the Device—Storage	−40 to +85 °C (−40 to +185°F)	
Ambient Air Temperature around the Device—Operation	−40 to +55 °C (−40 to +131°F)	
Vibration Resistance—In Operation	±1 mm (10–35 Hz) and 3 gn (35–150 Hz)	
Shock Resistance	10 gn	
Degree of Protection (Housing Only)	IP40	
Weight	83 g (2.93 oz)	
Agency Approvals	UL with socket, UR (E164862), CE, CSA (225619), RoHS	

Note: Actual product performance may vary depending on application and environmental conditions.

Dimensions, in. (mm)

Clear Cover Dimensions

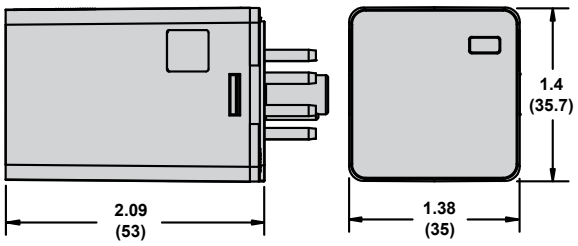

Full-Feature Cover Dimensions

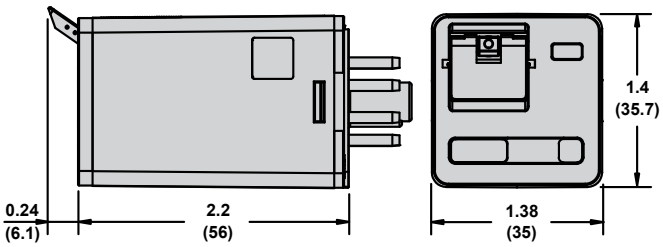

Wiring Diagrams

DPDT

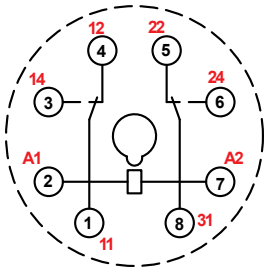

3PDT

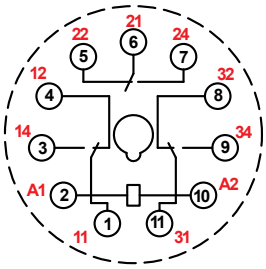

NEMA
IEC

Magnecraft General Purpose Relays

750R Series Accessories

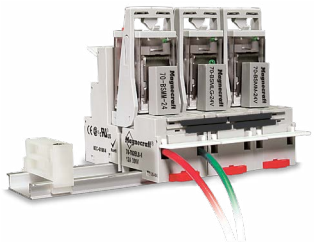

Description

Optional sockets offer customizable, Fingersafe solutions including protection modules, hold-down clips, and ID tags. Sockets are DIN rail and panel mount compatible.

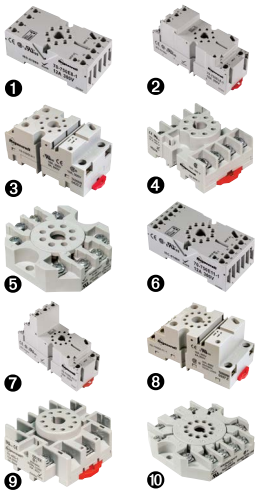

Relay Accessories

Description	Function	For Use with Relays	Pkg. Min.	Standard Part Number
Socket ❶	DIN / Panel mount, module compatible	750XBXR	10	70-750E8-1
Socket ❷	DIN / Panel mount with elevator terminals, module compatible		10	70-750EL8-1
Socket ❸	DIN / Panel mount, module compatible		10	70-750DL8-1
Socket ❹	DIN / Panel mount with screw terminals and clamping plates		10	70-464-1
Socket ❺	Panel mount with screw terminals and clamping plates		10	70-169-1
Socket ❻	DIN / Panel mount with elevator terminals, module compatible	750XCXR	10	70-750E11-1
Socket ❼	DIN / Panel mount with elevator terminals		10	70-750EL11-1
Socket ❽	DIN / Panel mount, module compatible		10	70-750DL11-1
Socket ❾	DIN / Panel mount with screw terminals and clamping plates		10	70-465-1
Socket ❿	Panel mount with screw terminals and clamping plates		10	70-170-1

Socket Accessories

Description	Function	For Use with Sockets	Coil Voltage	Pkg. Min.	Standard Part Number
Metal Spring Clip ❶	Secures relay in socket	70-750EL8-1, 70-750E8-1, 70-750E11-1, 70-464-1	–	10	16-1351
Metal Spring Clip ❷	Secures relay in socket	70-750E8-1, 70-750DL8-1, 70-750E11-1, 70-464-1	–	10	16-1344
Metal Spring Clip ❸	Secures relay in socket	70-750DL8-1	–	10	16-1332
Plastic ID Tag ❹	Write-on plastic labels	70-750E8-1, 70-750EL8-1, 70-750DL8-1, 70-750E11-1, 70-750EL11, 70-750DL11-1	–	10	16-750/788FT-1
Insulated Coil Bus Jumper System ❺	Wireless socket connection		–	10	16-750/788CBJ-1
Extruded Aluminum DIN Rail, 39.37 in. (1000 mm) ❻	Quick installation and removal of sockets	70-750EL8-1, 70-750E8-1, 70-750DL8-1, 70-750E11-1, 70-464-1, 70-465-1	–	10	16-700DIN
DIN Rail End Clip ❻	Plastic end clip with locking screw	–	–	10	16-DCLIP-1
Large Socket Module	MOV suppressor *(protects from damaging electrical spikes)*	70-750E8-1, 70-750EL8-1, 70-750DL8-1, 70-750E11-1, 70-750EL11-1, 70-750DL11-1	24 Vac/Vdc	10	70-ASMM-24
Large Socket Module	Protection diode *(protects external drive circuitry from inductive voltages)*		250 Vdc	10	70-ASMD-250
Large Socket Module ❼	LED indicator *(provides coil status at a glance)*		110/240 Vac/Vdc	10	70-ASMLG-110/240
Large Socket Module	RC suppressor *(snubs back EMF of relay coil)*		110/240 Vac	10	70-ASMR-110/240

Note: Use of an LED or RC socket module can increase coil power draw by up to 10%.

Magnecraft General Purpose Relays

788R Series

DPDT and 3PDT 10 A

UL Listed when used with proper Magnecraft sockets

7885 Clear Cover

7885 Full-Feature Cover

Description

The 788R Series square base, plug-in relays offer clear, full-feature, top flange, and side flange covers as well as optional sockets and accessories.

Feature	Benefit
10 A max. switching current	Ideal for automation panels and controls
Clear or full-feature cover options	Full-feature covers include LED indicator and locking test button
DPDT and 3PDT contact configurations	Simultaneously control separate circuits
Socket mount option	Simplifies installation and maintenance while also allowing the use of protection modules, hold-down clips, and other accessories
Gold-flashed contacts	Reduces contact oxidation and increases shelf life
Mechanical flag indicator	Standard feature displays relay status during testing or operation

Contact Rating	Contact Configuration	Nominal Voltage	Coil Resistance (Ω)	Standard Part Number: Clear Cover	Standard Part Number: Clear Cover with LED	Standard Part Number: Flange Mount	Standard Part Number: Full-Feature
10 A	DPDT	24 Vac, 50/60 Hz	72	788XBXRC-24A	788XBXRCL-24A	788XBXRC1-24A	788XBXRM4L-24A
		48 Vac, 50/60 Hz	290	–	–	–	788XBXRM4L-48A
		120 Vac, 50/60 Hz	1700	788XBXRC-120A	788XBXRCL-120A	788XBXRC1-120A	788XBXRM4L-120A
		240 Vac, 50/60 Hz	6800	788XBXRC-240A	788XBXRCL-240A	788XBXRC1-240A	788XBXRM4L-240A
		12 Vdc	120	788XBXRC-12D	788XBXRCL-12D	788XBXRC1-12D	788XBXRM4L-12D
		24 Vdc	470	788XBXRC-24D	788XBXRCL-24D	788XBXRC1-24D	788XBXRM4L-24D
		48 Vdc	1800	788XBXRC-48D	788XBXRCL-48D	788XBXRC1-48D	788XBXRM4L-48D
		110 Vdc	7300	788XBXRC-110D	788XBXRCL-110D	788XBXRC1-110D	788XBXRM4L-110D
	3PDT	12 Vac, 50/60 Hz	16.9	788XCXRC-12A	–	–	–
		24 Vac, 50/60 Hz	72	788XCXRC-24A	788XCXRCL-24A	788XCXRC1-24A	788XCXRM4L-24A
		48 Vac, 50/60 Hz	290	–	–	–	788XCXRM4L-48A
		120 Vac, 50/60 Hz	1700	788XCXRC-120A	788XCXRCL-120A	788XCXRC1-120A	788XCXRM4L-120A
		240 Vac, 50/60 Hz	6800	788XCXRC-240A	788XCXRCL-240A	788XCXRC1-240A	788XCXRM4L-240A
		12 Vdc	120	788XCXRC-12D	788XCXRCL-12D	788XCXRC1-12D	788XCXRM4L-12D
		24 Vdc	470	788XCXRC-24D	788XCXRCL-24D	788XCXRC1-24D	788XCXRM4L-24D
		48 Vdc	1800	788XCXRC-48D	788XCXRCL-48D	788XCXRC1-48D	788XCXRM4L-48D
		110 Vdc	7300	788XCXRC-110D	788XCXRCL-110D	788XCXRC1-110D	788XCXRM4L-110D

Note: Magnetic blowout versions are also available with an added contact rating of 3 A at 150 Vdc. Refer to the Part Number Explanation shown below.

Part Number Explanation

788 **XBXR** **69** **M4L** - **24D**

Series:
788 = 788R Series Relay

Contact Configuration:
XBXR = DPDT
XCXR = 3PDT

DC Switching:
Blank = None
69 = Magnetic Blowout (Clear Cover only)

Cover Options:
C = Clear Cover
CL = Clear Cover and LED
C1 = Flange Cover
M4L = Locking Push Button and LED

Coil Voltages:
12–240A = 12–240 Vac
12–110D = 12–110 Vdc

Please contact Customer Service for more information (847-441-2540).

Specifications

Part Number	788XBXR/XCXR
Contact Characteristics	
Terminal Style	Blade
Contact Material	Silver Alloy
Contact Configuration	DPDT/3PDT
Carrying Current	10 A
Maximum Switching Voltage	IEC: 250 Vac / 28 Vdc UL/CSA: 300 Vac / 30 Vdc
Rated Switching Current (Conforming to IEC AC-1 and DC-1)	NO: 10 A at 250 Vac / 28 Vdc NC: 5 A at 250 Vac / 28 Vdc
Rated Switching Current (Conforming to UL)	**Resistive:** 10 A at 277 Vac, 50/60 Hz, 200 k cycles 10 A at 30 Vdc, 200 k cycles **Motor:** 1/3 hp at 120 Vac, 6 k cycles 1 hp at 277 Vac, 6 k cycles **Pilot Duty:** B300, 6 k cycles
Rated Current with Magnetic Blowout (Code 69)	UL: 3 A at 150 Vdc (DPDT only), 6 k cycles
Minimum Switching Requirement	10 mA at 17 Vdc
Coil Characteristics	
Maximum Operating Voltage	110% (AC/DC)
Maximum Pickup Voltage	85% (AC); 80% (DC)
Drop-out Voltage Threshold	15% (AC); 10% (DC)
Average Consumption	3 VA (AC); 1.4 W (DC)
General Characteristics	
Electrical Life at Rated Load	100,000 operations
Mechanical Life (Unpowered)	5,000,000 operations
Operating Time	20 ms
Dielectric Strength—Between Coil and Contact (AC)	2500 V (rms)
Dielectric Strength—Between Poles (AC)	2000 V (rms)
Dielectric Strength—Between Open Contacts (AC)	1500 V (rms)
Ambient Air Temperature around the Device—Storage	−40 to +85 °C (−40 to +185 °F)
Ambient Air Temperature around the Device—Operation	−40 to +55 °C (−40 to +131 °F)
Vibration Resistance—In Operation	±1 mm (10–35 Hz) and 3 gn (35–150 Hz)
Shock Resistance	10 gn
Degree of Protection (Housing Only)	IP40
Weight	83 g (2.93 oz)
Agency Approvals	UL with socket, UR (E164862), CE, CSA (225619), RoHS

Note: Actual product performance may vary depending on application and environmental conditions.

Dimensions, in. (mm)

Clear Cover Dimensions

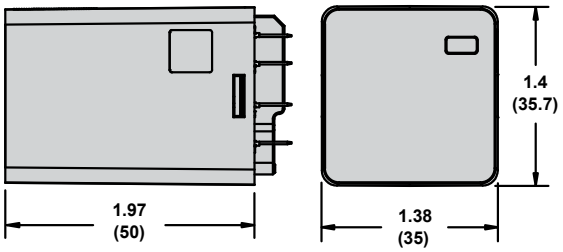

Full-Feature Cover Dimensions

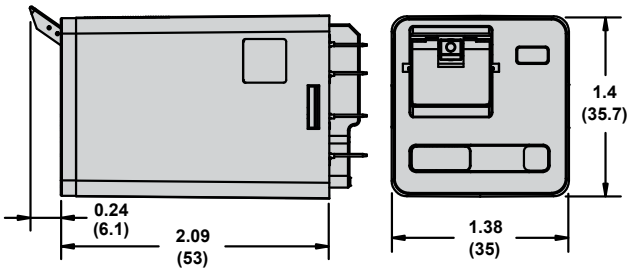

Side Flange Cover Dimensions

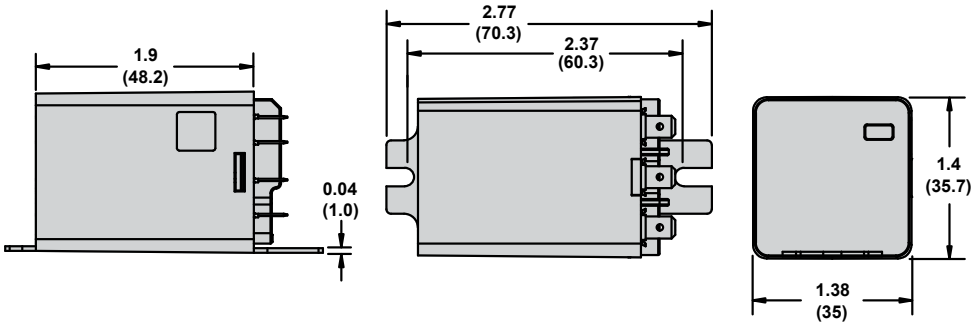

Wiring Diagrams

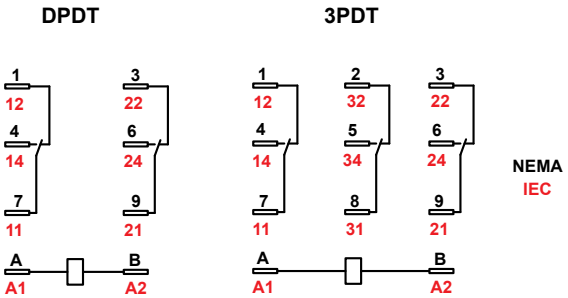

Magnecraft General Purpose Relays

788R Series Accessories

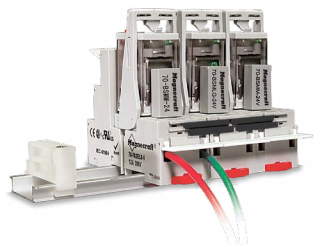

Description

Optional sockets offer customizable, Fingersafe solutions including protection modules, hold-down clips, and ID tags. Sockets are DIN rail and panel mount compatible.

Relay Accessories

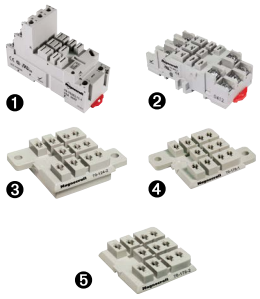

Description	Function	For Use with Relays	Pkg. Min.	Standard Part Number
Socket ❶	DIN mount with elevator terminals	788XBXR/XCXR	10	70-788EL11-1
Socket ❷	DIN / Panel mount with screw terminals and clamping plates		10	70-463-1
Socket ❸	0.187 in. Quick Connect terminals with mounting tabs		10	70-124-2
Socket ❹	Printed circuit terminals with mounting tabs		10	70-178-1
Socket ❺	Printed circuit terminals without mounting tabs		10	70-178-2

Socket Accessories

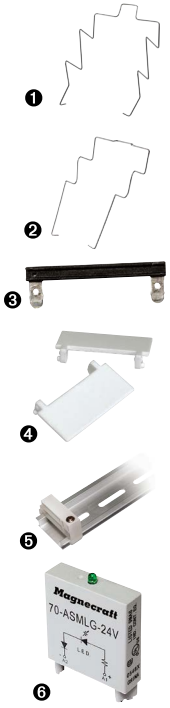

Description	Function	For Use with Sockets	Coil Voltage	Pkg. Min.	Standard Part Number
Metal Spring Clip ❶	Secures relay in socket	70-788EL11-1, 70-463-1, 70-124-1, 70-178-1, 70-178-2	–	10	16-1351
Metal Spring Clip ❷	Secures relay in socket	70-463-1	–	10	16-1344
Insulated Coil Bus Jumper System ❸	Wireless socket connection	70-788EL11-1	–	10	16-750/788CBJ-1
Plastic ID Tag ❹	Write-on plastic labels		–	10	16-750/788FT-1
Extruded Aluminum DIN Rail, 39.37 in. (1000 mm) ❺	Quick installation and removal of sockets	70-788EL11-1, 70-463-1	–	10	16-700DIN
DIN Rail End Clip ❺	Holds sockets firmly in place on DIN rail	–	–	10	16-DCLIP-1
Large Socket Module	MOV suppressor *(protects from damaging electrical spikes)*	70-788EL11-1	24 Vac/Vdc	10	70-ASMM-24
Large Socket Module	Protection diode *(protects external drive circuitry from inductive voltages)*		250 Vdc	10	70-ASMD-250
Large Socket Module ❻	LED indicator *(provides coil status at a glance)*		110/240 Vac/Vdc	10	70-ASMLG-110/240
Large Socket Module	RC suppressor *(snubs back EMF of relay coil)*		110/240 Vac	10	70-ASMR-110/240

Note: Use of an LED or RC socket module can increase coil power draw by up to 10%.

Magnecraft General Purpose Relays

782H Hazardous Location Series

4PDT 3 A and 5 A

UL Listed when used with proper Magnecraft sockets

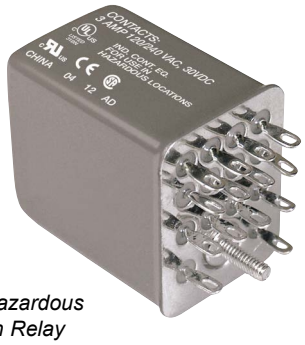

782H Hazardous Location Relay

Description

The hermetically sealed 782H Series relays comply with UL Class I Division 2 requirements for use in hazardous locations.

Feature	Benefit
Hermetically sealed	Complies with UL Class I Division 2 for Hazardous Locations Groups A, B, C, and D; sealed for wash down conditions
3 A / 5 A max. switching current	Ideal for automation and control applications
4PDT contact configuration	Simultaneously control up to 4 separate circuits
Screw mount options	Allows for direct mounting
Socket mount option	Simplifies installation and maintenance while also allowing the use of protection modules, hold-down clips, and other accessories
Gold-flashed contacts	Reduces contact oxidation and increases shelf life

Contact Rating	Contact Configuration	Nominal Voltage	Coil Resistance (Ω)	Standard Part Number
3 A	4PDT	120 Vac, 50/60 Hz	3900	782XDXH10-120A
		12 Vdc	160	782XDXH10-12D
		24 Vdc	650	782XDXH10-24D
		110 Vdc	11000	782XDXH10-110D
5 A	4PDT	120 Vac, 50/60 Hz	3900	782XDXH21-120A
		12 Vdc	160	782XDXH21-12D
		24 Vdc	650	782XDXH21-24D

Part Number Explanation

782 **XDXH** **10** - **24D**

Series:
782 = 782H Series Hazardous Location Relay

Contact Configuration:
XDXH = 4PDT, Hermetic

Contact Code:
10 = 3A Fine Silver, Gold Diffused
21 = 5A Silver Alloy

Coil Voltages:
24–240A = 24–240 Vac
12–110D = 12–110 Vdc

Please contact Customer Service for more information (847-441-2540).

Specifications

Part Number		782XDXH21	782XDXH10
Contact Characteristics			
Terminal Style		Blade	Blade
Contact Material		Silver Alloy	Fine Silver
Load Type		Standard	Low Level
Contact Configuration		4PDT	4PDT
Carrying Current		5 A	3 A
Maximum Switching Voltage		300 V	300 V
Rated Switching Current (Conforming to IEC AC-1)		5 A at 240 Vac (NO or NC Only)	3 A at 240 Vac (NO or NC Only)
Rated Switching Current (Conforming to UL and ANSI/ISA 12.12.01)		**Resistive:** 5 A at 120 Vac, 50/60 Hz, 100 k cycles 5 A at 240 Vac, 50/60 Hz, 100 k cycles 5 A at 30 Vdc, 100 k cycles	**Resistive:** 3 A at 120 Vac, 50/60 Hz, 100 k cycles 3 A at 240 Vac, 50/60 Hz, 100 k cycles 3 A at 30 Vdc, 100 k cycles **Motor:** 1/10 hp at 120 Vac 1/10 hp at 240 Vac
Minimum Switching Requirement		100 mA at 5 Vdc	10 mA at 5 Vdc
Coil Characteristics			
Maximum Operating Voltage		110% (AC/DC)	
Maximum Pickup Voltage		80% (AC); 75% (DC)	
Drop-out Voltage Threshold		30% (AC); 10% (DC)	
Average Consumption		1.2 VA (AC); 0.9 W (DC)	
General Characteristics			
Electrical Life at Rated Load		100,000 operations	
Mechanical Life (Unpowered)		10,000,000 operations	
Operating Time		20 ms	
Dielectric Strength	Between Coil and Contact (AC)	1600 V (rms)	
	Between Poles (AC)	1600 V (rms)	
Ambient Air Temperature around the Device	Storage	−60 to +85 °C (−76 to +185 °F)	
	Operation	−45 to +70 °C (−49 to +158 °F)	
Temperature Code for Hazardous Locations		T5: AC coil +40 °C (+40 °F), DC coil +70 °C (+158 °F)	
Vibration Resistance—In Operation		6 gn at 10–55 Hz	
Shock Resistance		10 gn	
Degree of Protection		Hermetically sealed	
Weight		45 g (1.59 oz)	
Agency Approvals		UL with socket, UR (E209950), CE, CSA (LR40787), RoHS	

Note: Actual product performance may vary depending on application and environmental conditions.

Dimensions, in. (mm)

782H

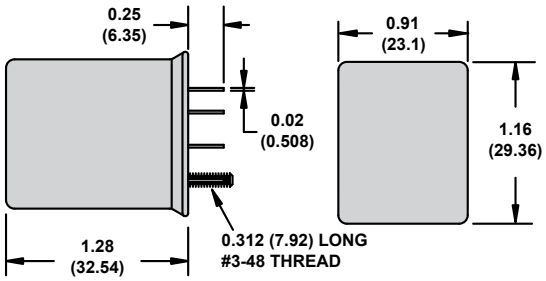

Wiring Diagrams

4PDT

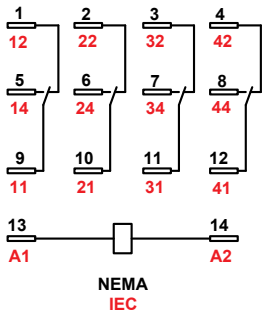

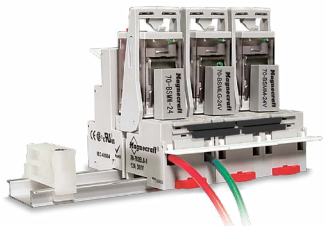

Description

Optional sockets offer customizable, Fingersafe solutions including protection modules, hold-down clips, and ID tags. Sockets are DIN rail and panel mount compatible.

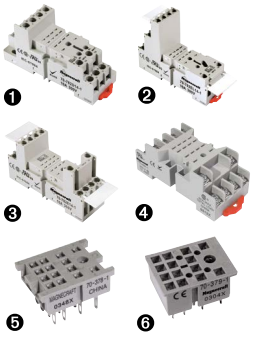

Relay Accessories

Description	Function	For Use with Relays	Pkg. Min.	Standard Part Number
Socket ❶	DIN / Panel mount with screw terminals and clamping plates	782XDXH	10	70-782D14-1
Socket ❷	DIN / Panel mount with elevator terminals		10	70-782EL14-1
Socket ❸	DIN / Panel mount with rising elevator box terminals		10	70-782E14-1
Socket ❹	DIN / Panel mount with screw terminals and clamping plates		10	70-461-1
Socket ❺	Solder terminals for chassis mount		10	70-378-1
Socket ❻	Printed circuit terminals for PCB mount		10	70-379-1

Socket Accessories

Description	Function	For Use with Sockets	Coil Voltage	Pkg. Min.	Standard Part Number
Metal Spring Clip ❶	Secures relay in socket	70-782D14-1, 70-782E14-1, 70-782EL14-1, 70-461-1, 70-378-1, 70-379-1	–	10	16-1342
Plastic ID Tag ❷	Write-on plastic labels	70-782E14-1, 70-782EL14-1	–	10	16-782FT-1
Insulated Coil Bus Jumper System ❸	Wireless socket connection	70-782EL14-1	–	10	16-782CBJ-1
Extruded Aluminum DIN Rail, 39.37 in. (1000 mm) ❹	Quick installation and removal of sockets	70-782D14-1, 70-782EL14-1, 70-782E14-1	–	10	16-700DIN
DIN Rail End Clip ❹	Holds sockets firmly in place on DIN rail	–	–	10	16-DCLIP-1
Small Socket Module	Protection diode *(protects external drive circuitry from inductive voltages)*	70-782D14-1, 70-782EL14-1, 70-782E14-1	6 to 250 Vdc	10	70-BSMD-250
Small Socket Module ❺	LED indicator *(provides coil status at a glance)*		24 Vac/Vdc	10	70-BSMLG-24
Small Socket Module	MOV suppressor *(protects from damaging electrical spikes)*		120 Vac/Vdc	10	70-BSMM-120
			24 Vac/Vdc	10	70-BSMM-24
			240 Vac/Vdc	10	70-BSMM-240

Note: Use of an LED socket module can increase coil power draw by up to 10%.

Magnecraft General Purpose Relays

750H Hazardous Location Series

DPDT, 3PDT 12 A

UL Listed when used with proper Magnecraft sockets

750H Hazardous Location Relay

Description

The hermetically sealed 750H Series relays comply with UL Class I Division 2 requirements for use in hazardous locations.

Feature	Benefit
Hermetically sealed	Complies with UL Class I Division 2 for Hazardous Locations Groups A, B, C, and D; sealed for wash down conditions
Octal style mounting	Robust and historically proven mounting platform that provides excellent structural support
12 A max. switching current	Ideal for automation and control applications
DPDT and 3PDT contact configuration	Simultaneously control separate circuits
Socket mount option	Simplifies installation and maintenance while also allowing the use of protection modules, hold-down clips, and other accessories

Contact Rating	Contact Configuration	Nominal Voltage	Coil Resistance (Ω)	Standard Part Number
12 A	DPDT	24 Vac, 50/60 Hz	72	750XBXH-24A
		120 Vac, 50/60 Hz	1700	750XBXH-120A
		12 Vdc	120	750XBXH-12D
		24 Vdc	470	750XBXH-24D
		110 Vdc	10000	750XBXH-110D
	3PDT	24 Vac, 50/60 Hz	72	750XCXH-24A
		120 Vac, 50/60 Hz	1700	750XCXH-120A
		24 Vdc	470	750XCXH-24D
		110 Vdc	10000	750XCXH-110D

Part Number Explanation

750 **XBXH** - **24D**

Series:
750 = 750H Hazardous Location Series Relay

Contact Configuration:
XBXH = DPDT, Hermetic
XCXH = 3PDT, Hermetic

Coil Voltages:
24–240A = 24–240 Vac
12–110D = 12–110 Vdc

Please contact Customer Service for more information (847-441-2540).

Specifications (UL 508)

Part Number		750XBXH	750XCXH
Contact Characteristics			
Terminal Style		Octal	Octal
Contact Material		Silver Alloy	Silver Alloy
Load Type		Standard	Standard
Contact Configuration		DPDT	3PDT
Carrying Current		12 A	12 A
Maximum Switching Voltage		300 V	300 V
Rated Switching Current (Conforming to UL and ANSI/ISA 12.12.01)		**Resistive:** 12 A at 120 Vac, 50/60 Hz 12 A at 240 Vac, 50/60 Hz 12 A at 28 Vdc **Motor:** 1/2 hp at 240 Vac, 50/60 Hz 1/3 hp at 120 Vac, 50/60 Hz **Pilot Duty:** B300	**Resistive:** 12 A at 120 Vac, 50/60 Hz 12 A at 240 Vac, 50/60 Hz 12 A at 28 Vdc **Motor:** 1/2 hp at 240 Vac, 50/60 Hz 1/3 hp at 120 Vac, 50/60 Hz **Pilot Duty:** B300
Minimum Switching Requirement		100 mA at 5 Vdc	100 mA at 5 Vdc
Coil Characteristics			
Maximum Operating Voltage		110% (AC/DC)	110% (AC/DC)
Maximum Pickup Voltage		85% (AC); 80% (DC)	85% (AC); 80% (DC)
Drop-out Voltage Threshold		30% (AC); 10% (DC)	30% (AC); 10% (DC)
Average Consumption		1.2 VA (AC); 0.9 W (DC)	2 VA (AC); 1.2 W (DC)
General Characteristics			
Electrical Life at Rated Load		100,000 operations	
Mechanical Life (Unpowered)		5,000,000 operations	
Operating Time		20 ms	
Dielectric Strength	Between Coil and Contact (AC)	1500 V (rms)	
	Between Poles (AC)	1500 V (rms)	
Ambient Air Temperature around the Device	Storage	−60 to +105 °C (−76 to +221 °F)	
	Operation	DC: −45 to +70 °C (−49 to +158 °F) AC: −45 to +55 °C (−49 to +131 °F)	
Temperature Code for Hazardous Locations		DC: T5, Max. Ambient Temperature +70 °C AC: T4A, Max. Ambient Temperature +40 °C	
Vibration Resistance—In Operation		6 gn at 10–55 Hz	
Shock Resistance		5 gn (11 ms)	
Degree of Protection		Hermetically sealed	
Weight		130 g (4.59 oz)	
Agency Approvals		UL with socket, UR (E209950), RoHS	

Note: Actual product performance may vary depending on application and environmental conditions.

Dimensions, in. (mm)

750H

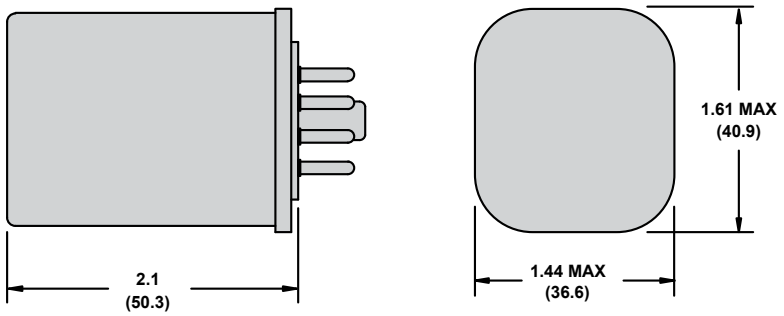

Wiring Diagrams

DPDT

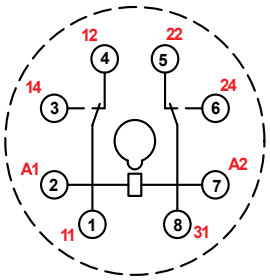

3PDT

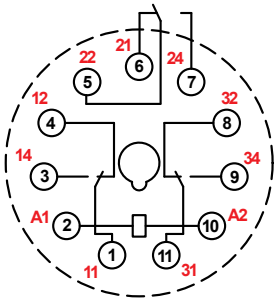

NEMA
IEC

Magnecraft General Purpose Relays

750H Hazardous Location Series Accessories

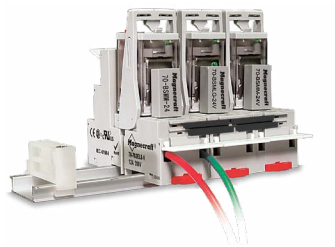

Description

Optional sockets offer customizable, Fingersafe solutions including protection modules, hold-down clips, and ID tags. Sockets are DIN rail and panel mount compatible.

Relay Accessories

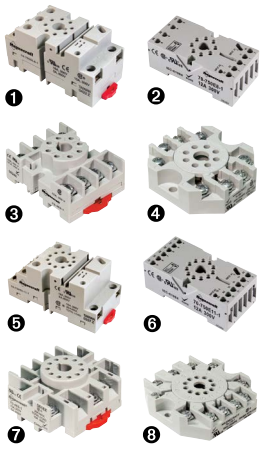

Description	Function	For Use with Relays	Pkg. Min.	Standard Part Number
Socket ❶	DIN / Panel mount with screw terminals	750XBXH	10	70-750DL8-1
Socket ❷	DIN / Panel mount with elevator terminals, module compatible		10	70-750E8-1
Socket ❸	DIN / Panel mount with screw terminals and clamping plates		10	70-464-1
Socket ❹	Panel mount with screw terminals and clamping plates		10	70-169-1
Socket ❺	DIN / Panel mount	750XCXH	10	70-750DL11-1
Socket ❻	DIN / Panel mount with elevator terminals		10	70-750E11-1
Socket ❼	DIN / Panel mount with screw terminals and clamping plates		10	70-465-1
Socket ❽	Panel mount with screw terminals and clamping plates		10	70-170-1

Socket Accessories

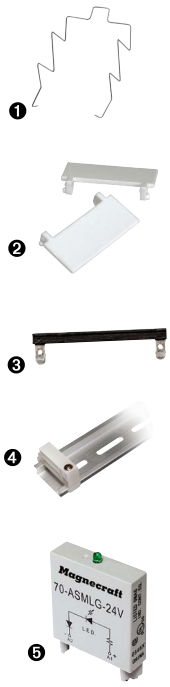

Description	Function	For Use with Sockets	Coil Voltage	Pkg. Min.	Standard Part Number
Metal Spring Clip ❶	Secures relay in socket	70-750DL8-1, 70-750E8-1, 70-464-1, 70-750E11-1, 70-750DL11-1, 70-465-1	–	10	16-1351
Plastic ID Tag ❷	Write-on plastic labels	70-750E8-1, 70-750E11-1	–	10	16-750/788FT-1
Insulated Coil Bus Jumper System ❸	Wireless socket connection	70-750DL8-1, 70-750DL11-1	–	10	16-750/788CBJ-1
Extruded Aluminum DIN Rail, 39.37 in. (1000 mm) ❹	Quick installation and removal of sockets	70-750DL8-1, 70-750E8-1, 70-464-1, 70-750E11-1, 70-750DL11-1, 70-465-1	–	10	16-700DIN
DIN Rail End Clip ❹	Holds sockets firmly in place on DIN rail	–	–	10	16-DCLIP-1
Large Socket Module	MOV suppressor *(protects from damaging electrical spikes)*	70-750DL8-1, 70-750E8-1, 70-750E11-1, 70-750DL11-1	24 Vac/Vdc	10	70-ASMM-24
Large Socket Module	Protection diode *(protects external drive circuitry from inductive voltages)*		250 Vdc	10	70-ASMD-250
Large Socket Module ❺	LED indicator *(provides coil status at a glance)*		110/240 Vac/Vdc	10	70-ASMLG-110/240
Large Socket Module	RC suppressor *(snubs back EMF of relay coil)*		110/240 Vac	10	70-ASMR-110/240

Note: Use of an LED or RC socket module can increase coil power draw by up to 10%.

Magnecraft General Purpose Relays

Sockets and Mounting Adapters

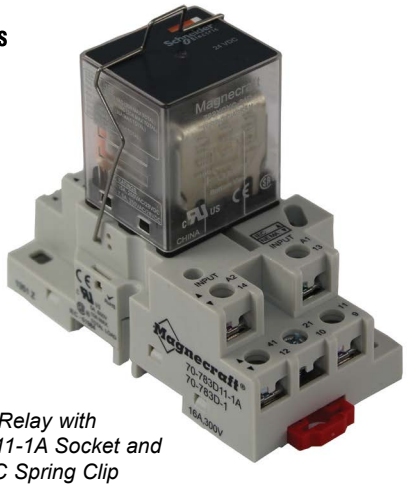

783XCX Relay with 70-783D11-1A Socket and 16-783SC Spring Clip

- Socket Specifications 42
- Mounting Adapter Specifications 65

The following relay/socket combinations comprise a UL Listed assembly when used with each other. This added benefit allows for easier installation as there are no end-use evaluations required when using Magnecraft relays or sockets with third party components.

UL Listed Relay/Socket Combinations

Mating Relay(s)	Number of Socket Pins	Socket Part Number
781R	5	70-781D5R-1A
782	8	70-782D8-1A
		70-459-1
792XBX	8	70-782EL8-1
792XDX	14	70-782D14-1
		70-782E14-1
		70-782EL14-1
		70-461-1
783	11	70-783D11-1A
784	14	70-784D14-1
750R	8	70-464-1
		70-750E8-1
		70-750EL8-1
		70-750DL8-1
	11	70-465-1
		70-750E11-1
		70-750EL11-1
		70-750DL11-1
788R	11	70-463-1
		70-788EL11-1
782H	14	70-782EL14-1
		70-782E14-1
		70-782D14-1
		70-461-1
750H	8	70-464-1
		70-750E8-1
	11	70-465-1
		70-750E11-1

Socket Specifications

Part Number	70-124-2
Contact Configuration	3PDT
Number of Terminals	11
Mounting Style	Panel / Chassis
Current Rating	15 A
Nominal Voltage Rating	300 V
Storage Temperature Range	−40 to +105 °C (−40 to +221 °F)
Operating Temperature Range	−40 to +55 °C (−40 to +131 °F)
Protection Category (Fingersafe)	IP20
Internal Metal Tracks	Copper Alloy, Zinc Plated
Screw Terminals	Copper Alloy, Zinc Plated
Screw Style	–
Screw Size	–
Maximum Screw Torque	–
Terminal Connection	Solder
Terminal Layout	Mix
Maximum Wire Size	**Solid Cu:** (Output) 16 AWG,1.0 mm²; **Stranded Cu:** (Output) 16 AWG,1.0 mm²
DIN Rail Mounting, EN 60715	–
Chassis Mount Screw Torque	–
Flammability Rating	94V-0
Weight	12.1 g (0.43 oz)
Agency Approvals	UL (E70550), CE, CSA (LR40787), RoHS

Dimensions, in. (mm)

70-124-2

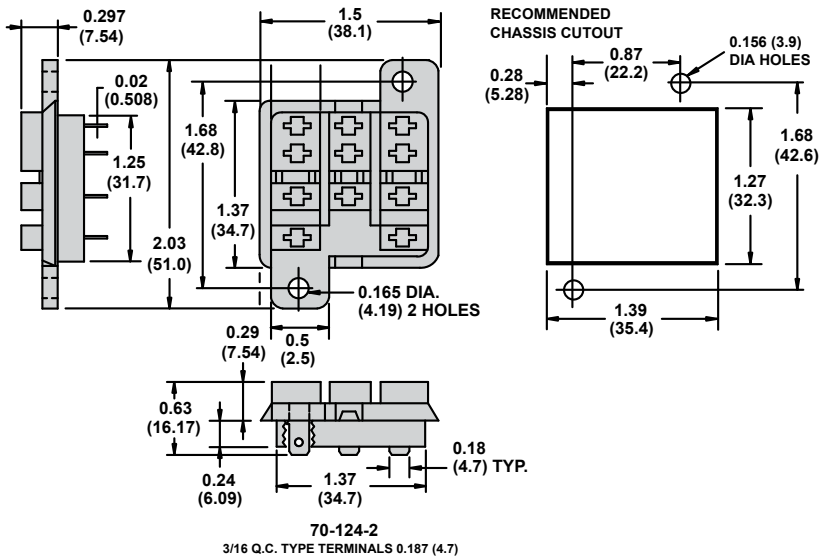

Wiring Diagram

70-124-2

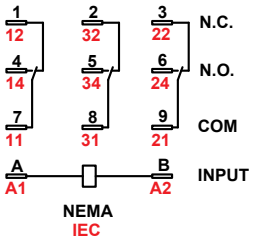

Magnecraft General Purpose Relays

Socket Specifications
70-169-1 and 70-170-1

Socket Specifications

Part Number	70-169-1	70-170-1
Contact Configuration	DPDT	3PDT
Number of Terminals	8	11
Mounting Style	Panel	Panel
Current Rating	15 A	15 A
Nominal Voltage Rating	300 V	300 V
Storage Temperature Range	−40 to +105 °C (−40 to +221 °F)	−40 to +105 °C (−40 to +221 °F)
Operating Temperature Range	−40 to +55 °C (−40 to +131 °F)	−40 to +55 °C (−40 to +131 °F)
Protection Category (Fingersafe)	–	–
Internal Metal Tracks	Copper Alloy, Zinc Plated	Copper Alloy, Zinc Plated
Screw Terminals	Steel, Zinc Plated	Steel, Zinc Plated
Screw Style	Combination Head	Combination Head
Screw Size	M3.5 mm	M3.5 mm
Maximum Screw Torque	9 lb-in / 1.0 N•m	9 lb-in / 1.0 N•m
Terminal Connection	Screw Clamping	Screw Clamping
Terminal Layout	Mix	Mix
Maximum Wire Size	**Solid Cu:** two 14–12 AWG; two 2.5–4 mm² **Stranded Cu:** two 14–12 AWG; two 2.5–4 mm²	**Solid Cu:** two 14–12 AWG; two 2.5–4 mm² **Stranded Cu:** two 14–12 AWG; two 2.5–4 mm²
DIN Rail Mounting, EN 60715	35 mm	35 mm
Chassis Mount Screw Torque	7 lb-in / 0.8 N•m	7 lb-in / 0.8 N•m
Flammability Rating	94V-0	94V-0
Weight	57 g (2.01 oz)	57 g (2.01 oz)
Agency Approvals	UL (E70550), CE, CSA (LR97899), RoHS	UL (E70550), CE, CSA (LR97899), RoHS

Dimensions, in. (mm)

70-169-1

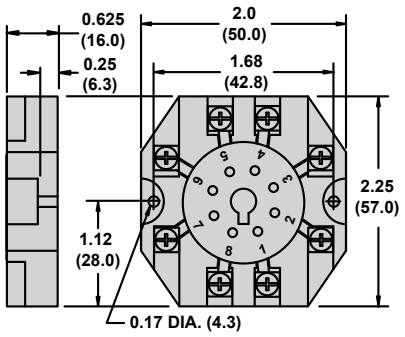

70-170-1

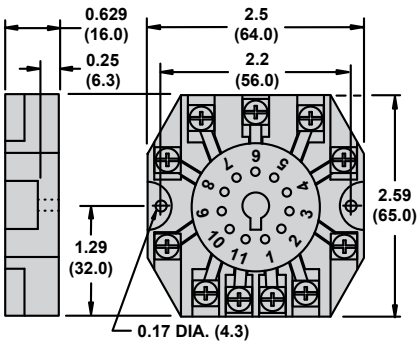

Wiring Diagrams

70-169-1

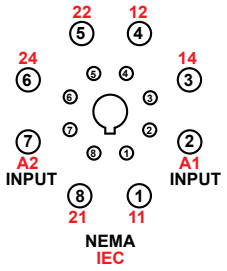

70-170-1

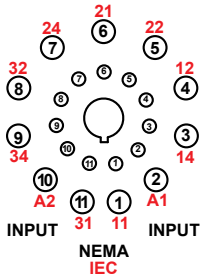

Magnecraft General Purpose Relays

Socket Specifications
70-178-1 and 70-178-2

Socket Specifications

Part Number	70-178-1	70-178-2
Contact Configuration	3PDT	3PDT
Number of Terminals	11	11
Mounting Style	Panel / PCB	PCB
Current Rating	15 A	15 A
Nominal Voltage Rating	300 V	300 V
Storage Temperature Range	−40 to +105 °C (−40 to +221 °F)	−40 to +105 °C (−40 to +221 °F)
Operating Temperature Range	−40 to +55 °C (−40 to +131 °F)	−40 to +55 °C (−40 to +131 °F)
Protection Category (Fingersafe)	IP20	IP20
Internal Metal Tracks	Copper Alloy, Zinc Plated	Copper Alloy, Zinc Plated
Screw Terminals	Copper Alloy, Zinc Plated	Copper Alloy, Zinc Plated
Screw Style	–	–
Screw Size	–	–
Maximum Screw Torque	–	–
Terminal Connection	PCB	PCB
Terminal Layout	Mix	Mix
Maximum Wire Size	**Solid Cu:** (Output): 16 AWG, 1.0 mm² **Stranded Cu:** (Output): 16 AWG, 1.0 mm²	**Solid Cu:** (Output): 16 AWG, 1.0 mm² **Stranded Cu:** (Output): 16 AWG, 1.0 mm²
DIN Rail Mounting, EN 60715	–	–
Chassis Mount Screw Torque	–	–
Flammability Rating	94V-0	94V-0
Weight	12.1 g (0.43 oz)	12.1 g (0.43 oz)
Agency Approvals	UL (E70550), CE, CSA (LR40787), RoHS	UL (E70550), CE, CSA (LR40787), RoHS

Dimensions, in. (mm)

70-178-1

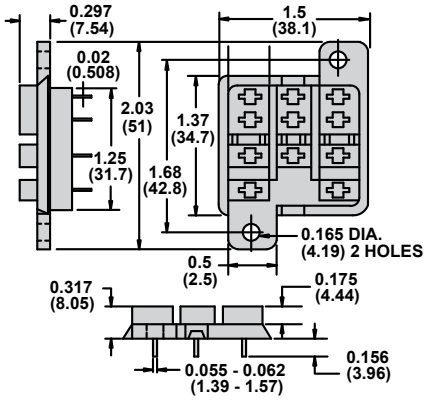

70-178-2

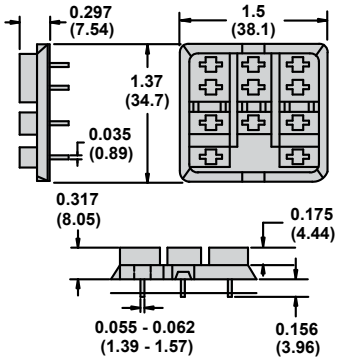

RECOMMENDED CIRCUIT BOARD LAYOUT FOR 70-178-1 & 70-178-2 BOTTOM VIEW

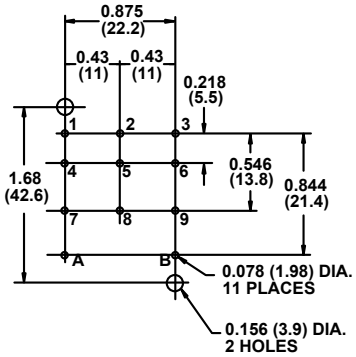

Wiring Diagram

70-178-1 & 70-178-2

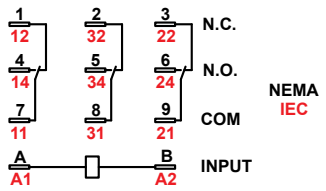

Magnecraft General Purpose Relays

Socket Specifications
70-378-1 and 70-379-1

Socket Specifications

Part Number	70-378-1	70-379-1
Contact Configuration	4PDT	4PDT
Number of Terminals	14	14
Mounting Style	Chassis	PCB
Current Rating	5 A	5 A
Nominal Voltage Rating	120 V	120 V
Storage Temperature Range	−40 to +105 °C (−40 to +221 °F)	−40 to +105 °C (−40 to +221 °F)
Operating Temperature Range	−40 to +55 °C (−40 to +131 °F)	−40 to +55 °C (−40 to +131 °F)
Protection Category (Fingersafe)	–	–
Internal Metal Tracks	Copper Alloy, Zinc Plated	Copper Alloy, Zinc Plated
Screw Terminals	Copper Alloy, Zinc Plated	Copper Alloy, Zinc Plated
Screw Style	–	–
Screw Size	–	–
Maximum Screw Torque	–	–
Terminal Connection	Solder	PCB
Terminal Layout	Mix	Mix
Maximum Wire Size	**Solid Cu:** (Output): 18 AWG, 0.8 mm² **Stranded Cu:** (Output): 18 AWG, 0.8 mm²	–
DIN Rail Mounting, EN 60715	35 mm	–
Chassis Mount Screw Torque	7 lb-in / 0.8 N•m	–
Flammability Rating	94V-0	94V-0
Weight	6.2 g (0.22 oz)	5.8 g (0.20 oz)
Agency Approvals	UL (E70550), CE, CSA (LR40787), RoHS	UL (E70550), CE, CSA (LR40787), RoHS

Dimensions, in. (mm)

70-378-1

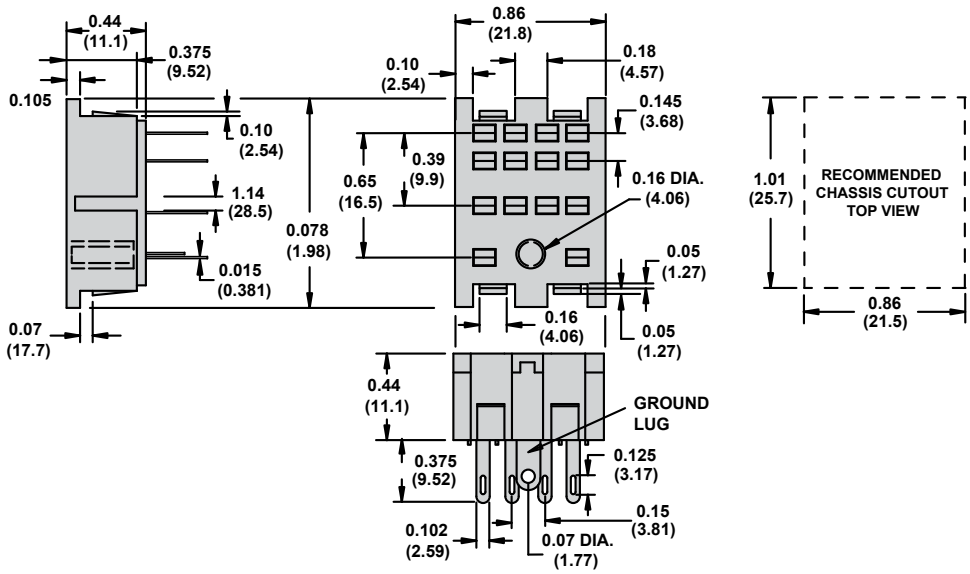

Magnecraft General Purpose Relays

Socket Specifications

70-378-1 and 70-379-1

Dimensions, in. (mm)

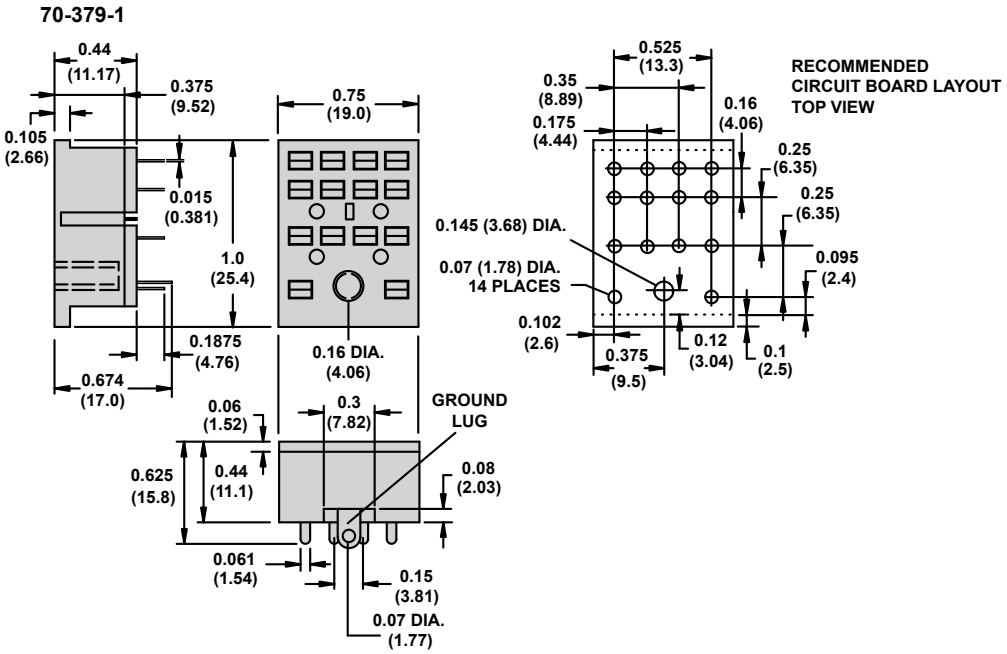

Wiring Diagrams

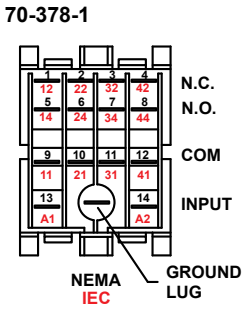

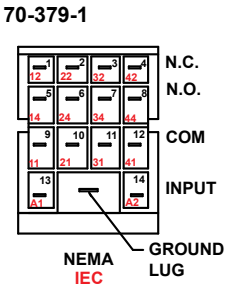

Magnecraft General Purpose Relays

Socket Specifications
70-401-1 and 70-402-1

Socket Specifications

Part Number	70-401-1	70-402-1
Contact Configuration	DPDT	DPDT
Number of Terminals	8	8
Mounting Style	Chassis	PCB
Current Rating	10 A	10 A
Nominal Voltage Rating	300 V	300 V
Storage Temperature Range	−40 to +105 °C (−40 to +221 °F)	−40 to +105 °C (−40 to +221 °F)
Operating Temperature Range	−40 to +55 °C (−40 to +131 °F)	−40 to +55 °C (−40 to +131 °F)
Protection Category (Fingersafe)	–	–
Internal Metal Tracks	Copper Alloy, Zinc Plated	Copper Alloy, Zinc Plated
Screw Terminals	Copper Alloy, Zinc Plated	Copper Alloy, Zinc Plated
Screw Style	Combination Head	–
Screw Size	M3.5 mm	–
Maximum Screw Torque	9 lb-in / 1.0 N•m	–
Terminal Connection	Solder	PCB
Terminal Layout	Mix	Mix
Maximum Wire Size	**Solid Cu:** (Output): 18 AWG, 0.8 mm² **Stranded Cu:** (Output): 18 AWG, 0.8 mm²	–
DIN Rail Mounting, EN 60715	–	–
Chassis Mount Screw Torque	7 lb-in / 0.8 N•m	–
Flammability Rating	94V-0	94V-0
Weight	6.2 g (0.22 oz)	6.5 g (0.23 oz)
Agency Approvals	UL (E70550), CE, RoHS	UL (E70550), CE, RoHS

Dimensions, in. (mm)

70-401-1

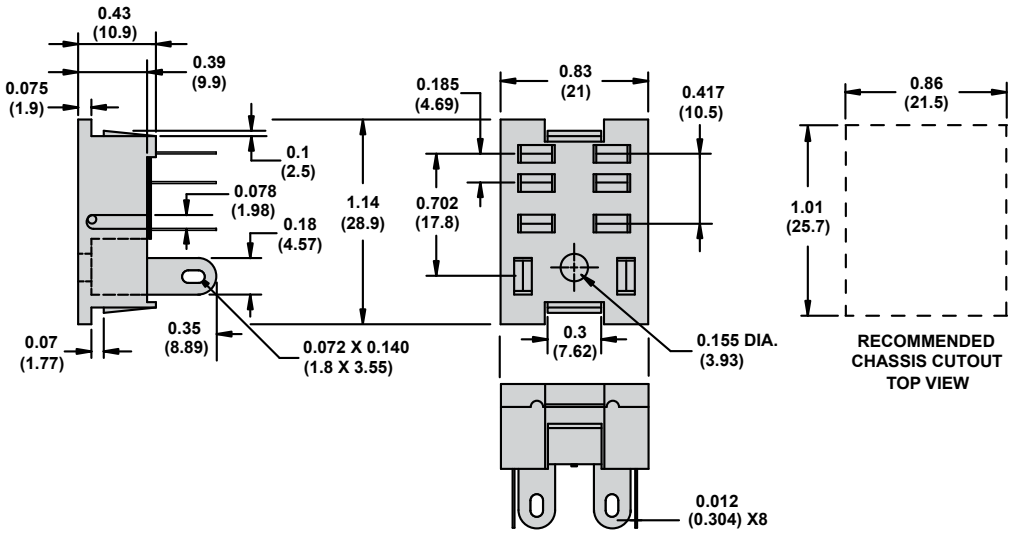

Magnecraft General Purpose Relays

Socket Specifications
70-401-1 and 70-402-1

Dimensions, in. (mm)

70-402-1

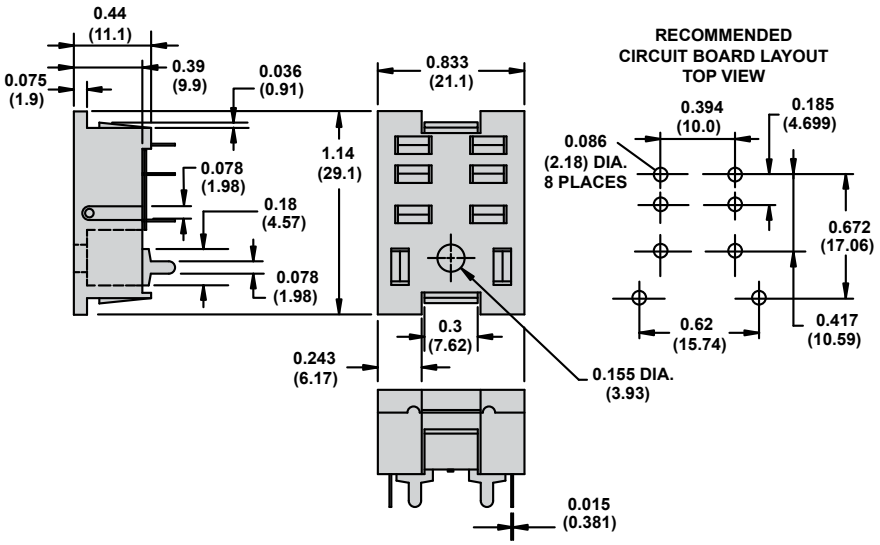

Wiring Diagrams

70-401-1

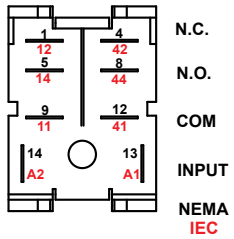

70-402-1

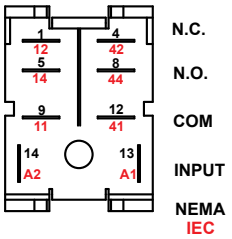

Magnecraft General Purpose Relays

Socket Specifications

70-459-1, 70-461-1, and 70-463-1

Socket Specifications

Part Number	70-459-1	70-461-1	70-463-1
Contact Configuration	DPDT	4PDT	3PDT
Number of Terminals	8	14	11
Mounting Style	Panel / DIN rail	Panel / DIN rail	Panel / DIN rail
Current Rating	10 A	10 A	15 A
Nominal Voltage Rating	300 V	300 V	300 V
Storage Temperature Range	−40 to +105 °C (−40 to +221°F)	−40 to +105 °C (−40 to +221 °F)	−40 to +105 °C (−40 to +221 °F)
Operating Temperature Range	−40 to +55 °C (−40 to +131 °F)	−40 to +70 °C (−40 to +158 °F)	−40 to +55 °C (−40 to +131 °F)
Protection Category (Fingersafe)	–	–	–
Internal Metal Tracks	Copper Alloy, Zinc Plated	Copper Alloy, Zinc Plated	Copper Alloy, Zinc Plated
Screw Terminals	Steel, Zinc Plated	Steel, Zinc Plated	Steel, Zinc Plated
Screw Style	Combination Head	Combination Head	Combination Head
Screw Size	M3.5 mm	M3 mm	M3.5 mm
Maximum Screw Torque	9 lb-in / 1.0 N•m	7 lb-in / 0.8 N•m	9 lb-in / 1.0 N•m
Terminal Connection	Screw Clamping	Elevator	Screw Clamping
Terminal Layout	Mix	Separate	Mix
Maximum Wire Size	**Solid Cu:** two 14–12 AWG; two 2.5–4 mm² **Stranded Cu:** two 14–12 AWG; two 2.5–4 mm²	**Solid Cu:** two 16–14 AWG; two 1.5–2.5mm² **Stranded Cu:** two 16–14 AWG; two 1.5–2.5mm²	**Solid Cu:** two 14–12 AWG; two 2.5–4 mm² **Stranded Cu:** two 14–12 AWG; two 2.5–4 mm²
DIN Rail Mounting, EN 60715	35 mm	35 mm	35 mm
Chassis Mount Screw Torque	7 lb-in / 0.8 N•m	7 lb-in / 0.8 N•m	7 lb-in / 0.8 N•m
Flammability Rating	94V-0	94V-0	94V-0
Weight	50 g (1.76 oz)	50 g (1.76 oz)	51 g (1.79 oz)
Agency Approvals	UL (E70550), CE, CSA (LR97899), RoHS	UL (E70550), CE, CSA (LR97899), RoHS	UL (E70550), CE, CSA (LR97899), RoHS

Dimensions, in. (mm)

70-459-1

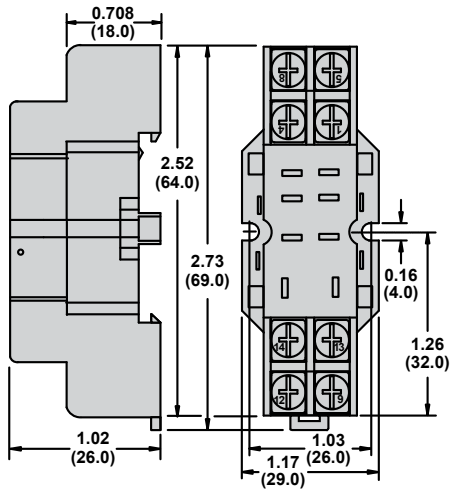

70-461-1

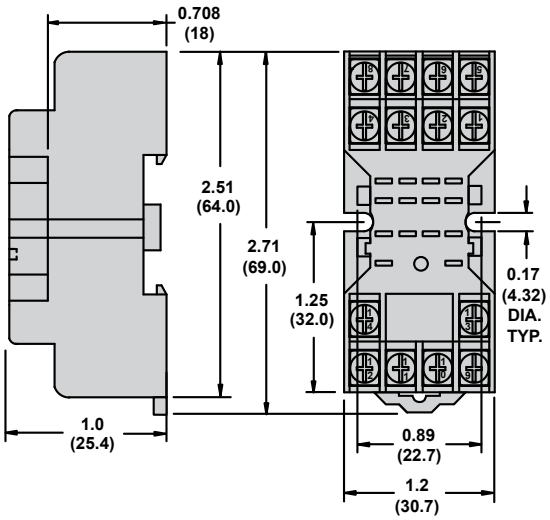

Magnecraft General Purpose Relays

Socket Specifications

70-459-1, 70-461-1, and 70-463-1

Dimensions, in. (mm)

70-463-1

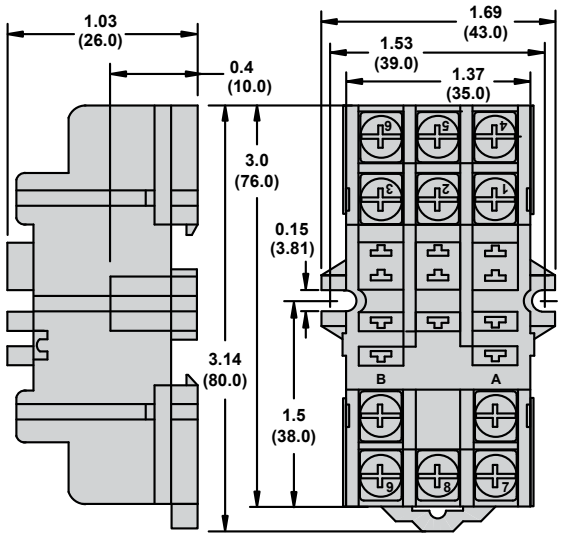

Wiring Diagrams

70-459-1

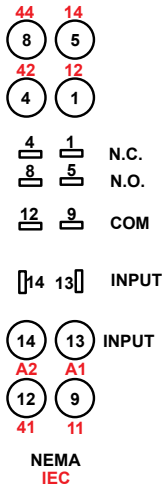

70-461-1

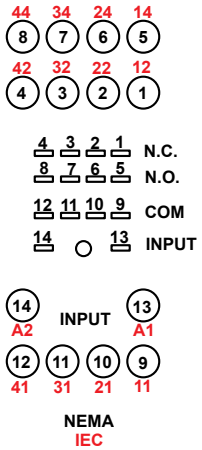

70-463-1

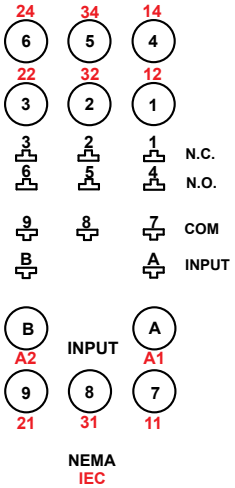

Magnecraft General Purpose Relays

Socket Specifications
70-464-1 and 70-465-1

Socket Specifications

Part Number	70-464-1	70-465-1
Contact Configuration	DPDT	3PDT
Number of Terminals	8	11
Mounting Style	Panel / DIN rail	Panel / DIN rail
Current Rating	15 / 10 A	15 / 5 A
Nominal Voltage Rating	300 / 600 V	300 / 600 V
Storage Temperature Range	−40 to +105 °C (−40 to +221 °F)	−40 to +105 °C (−40 to +221 °F)
Operating Temperature Range	−40 to +55 °C (−40 to +131 °F)	−40 to +55 °C (−40 to +131 °F)
Protection Category (Fingersafe)	–	–
Internal Metal Tracks	Copper Alloy, Zinc Plated	Copper Alloy, Zinc Plated
Screw Terminals	Steel, Zinc Plated	Steel, Zinc Plated
Screw Style	Combination Head	Combination Head
Screw Size	M3.5 mm	M3.5 mm
Maximum Screw Torque	9 lb-in / 1.0 N•m	9 lb-in / 1.0 N•m
Terminal Connection	Screw Clamping	Screw Clamping
Terminal Layout	Mix	Mix
Maximum Wire Size	**Solid Cu:** two 14–12 AWG; two 2.5–4 mm² **Stranded Cu:** two 14–12 AWG; two 2.5–4 mm²	**Solid Cu:** two 14–12 AWG; two 2.5–4 mm² **Stranded Cu:** two 14–12 AWG; two 2.5–4 mm²
DIN Rail Mounting, EN 60715	35 mm	35 mm
Chassis Mount Screw Torque	7 lb-in / 0.8 N•m	7 lb-in / 0.8 N•m
Flammability Rating	94V-0	94V-0
Weight	40 g (1.41 oz)	57 g (2.01 oz)
Agency Approvals	UL (E70550), CE, CSA (LR97899), RoHS	UL (E70550), CE, CSA (LR97899), RoHS

Dimensions, in. (mm)

70-464-1

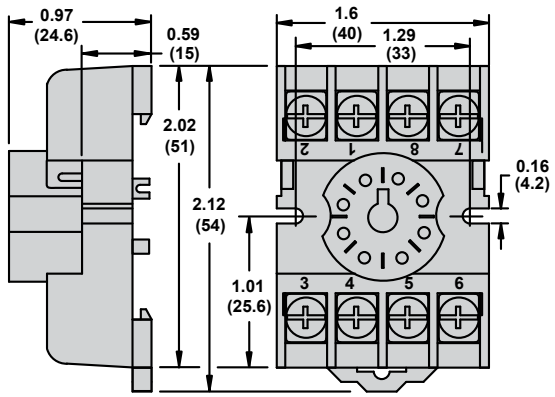

70-465-1

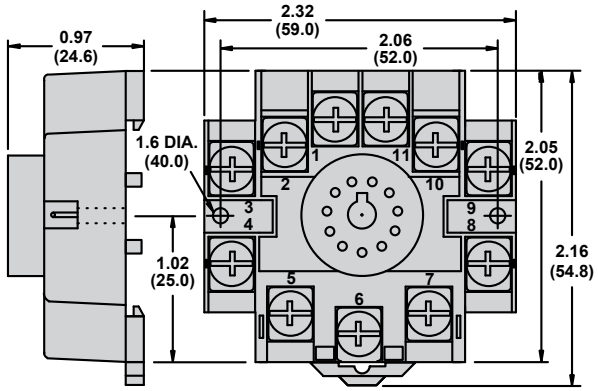

Wiring Diagrams

70-464-1

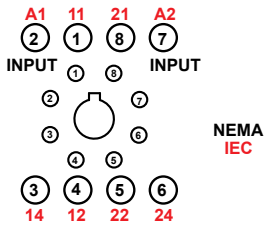

70-465-1

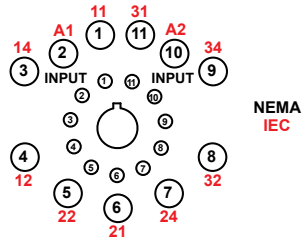

Magnecraft General Purpose Relays

Socket Specifications

70-750DL8-1 and 70-750DL11-1

Socket Specifications

Part Number	70-750DL8-1	70-750DL11-1
Contact Configuration	DPDT	3PDT
Number of Terminals	8	11
Mounting Style	Panel / DIN rail	Panel / DIN rail
Current Rating	16 A	16 A
Nominal Voltage Rating	300 V	600 V
Storage Temperature Range	−40 to +105 °C (−40 to +221 °F)	−40 to +105 °C (−40 to +221 °F)
Operating Temperature Range	−40 to +55 °C (−40 to +131 °F)	−40 to +55 °C (−40 to +131 °F)
Protection Category (Fingersafe)	IP20	IP20
Internal Metal Tracks	Copper Alloy, Zinc Plated	Copper Alloy, Zinc Plated
Screw Terminals	Steel, Zinc Plated	Steel, Zinc Plated
Screw Style	Combination Head	Combination Head
Screw Size	M3.5 mm	M3.5 mm
Maximum Screw Torque	9 lb-in / 1.0 N•m	9 lb-in / 1.0 N•m
Terminal Connection	Screw Clamping	Screw Clamping
Terminal Layout	Mix	Mix
Maximum Wire Size	**Solid Cu:** two 14–12 AWG; two 2.5–4 mm² **Stranded Cu:** two 14–12 AWG; two 2.5–4 mm²	**Solid Cu:** two 14–12 AWG; two 2.5–4 mm² **Stranded Cu:** two 14–12 AWG; two 2.5–4 mm²
DIN Rail Mounting, EN 60715	35 mm	35 mm
Chassis Mount Screw Torque	7 lb-in / 0.8 N•m	7 lb-in / 0.8 N•m
Flammability Rating	94V-0	94V-0
Weight	60 g (2.12 oz)	78 g (2.75 oz)
Agency Approvals	UL (E70550), CE, CSA (LR40787), RoHS	UL (E70550), CE, CSA (LR40787), RoHS

Dimensions, in. (mm)

70-750DL11-1

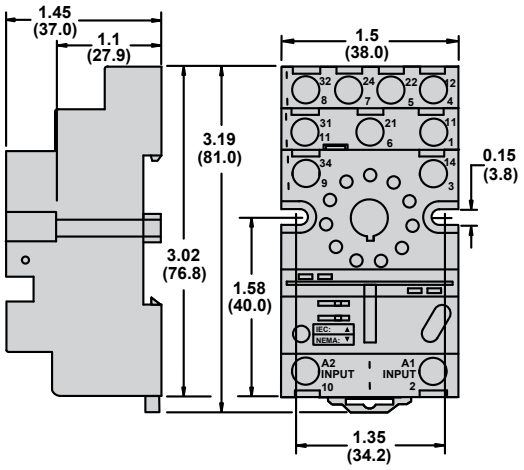

70-750DL8-1

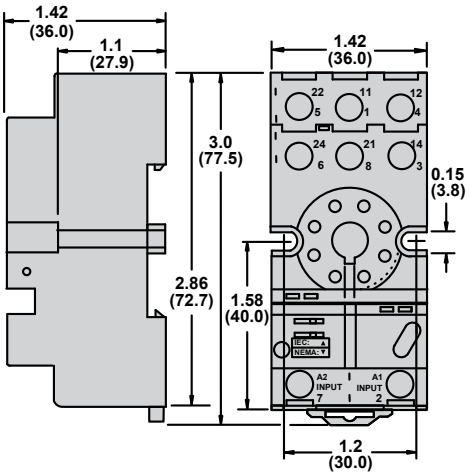

Magnecraft General Purpose Relays

Socket Specifications

70-750DL8-1, 70-750DL11-1, 70-750E8, and 70-750E11-1

Wiring Diagrams

70-750DL11-1

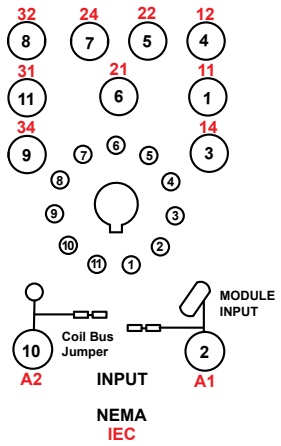

70-750DL8-1

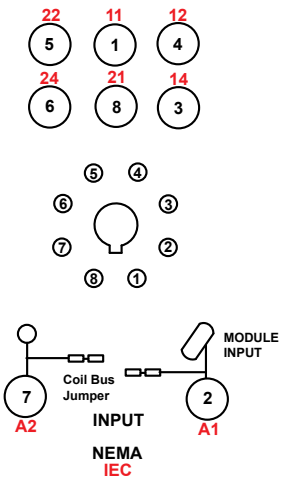

Socket Specifications

Part Number	70-750E8-1	70-750E11-1
Contact Configuration	DPDT	3PDT
Number of Terminals	8	11
Mounting Style	Panel / DIN rail	Panel / DIN rail
Current Rating	12 A	12 A
Nominal Voltage Rating	300 V	300 V
Storage Temperature Range	−40 to +105 °C (−40 to +221 °F)	−40 to +105 °C (−40 to +221 °F)
Operating Temperature Range	−40 to +55 °C (−40 to +131 °F)	−40 to +55 °C (−40 to +131 °F)
Protection Category (Fingersafe)	IP20	IP20
Internal Metal Tracks	Copper Alloy, Zinc Plated	Copper Alloy, Zinc Plated
Screw Terminals	Steel, Zinc Plated	Steel, Zinc Plated
Screw Style	Combination Head	Combination Head
Screw Size	M3.5 mm	M3.5 mm
Maximum Screw Torque	9 lb-in / 1.0 N•m	9 lb-in / 1.0 N•m
Terminal Connection	Elevator	Elevator
Terminal Layout	Separate	Separate
Maximum Wire Size	**Solid Cu:** two 14–12 AWG; two 2.5–4 mm² **Stranded Cu:** two 14–12 AWG; two 2.5–4 mm²	**Solid Cu:** two 14–12 AWG; two 2.5–4 mm² **Stranded Cu:** two 14–12 AWG; two 2.5–4 mm²
DIN Rail Mounting, EN 60715	35 mm	35 mm
Chassis Mount Screw Torque	7 lb-in / 0.8 N•m	7 lb-in / 0.8 N•m
Flammability Rating	94V-0	94V-0
Weight	85 g (3.0 oz)	85 g (3.0 oz)
Agency Approvals	UL (E70550), CE, CSA (LR40787), RoHS	UL (E70550), CE, CSA (LR40787), RoHS

Magnecraft General Purpose Relays

Socket Specifications

70-750E8 and 70-750E11-1

Dimensions, in. (mm)

70-750E11-1

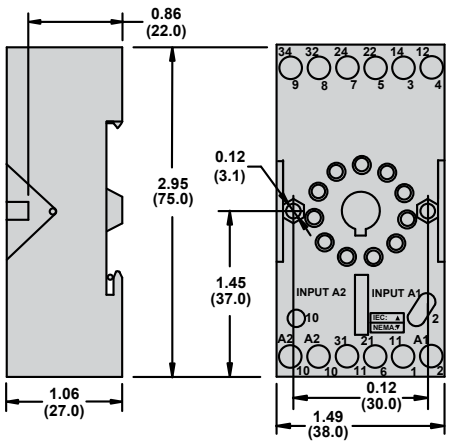

70-750E8-1

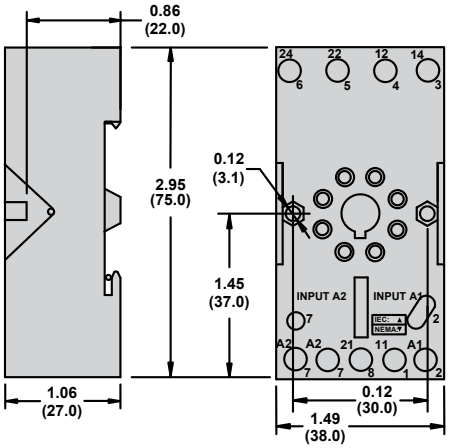

Wiring Diagrams

70-750E11-1

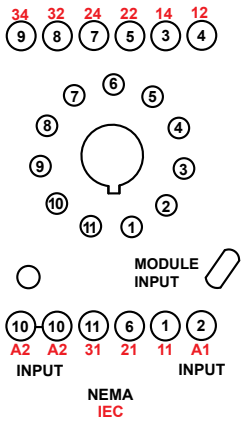

70-750E8-1

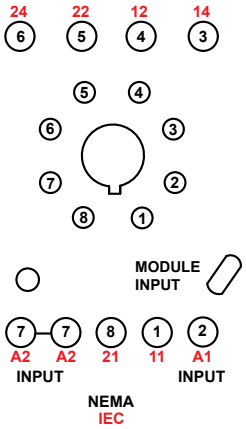

Magnecraft General Purpose Relays

Socket Specifications

70-750EL8-1 and 70-750EL11-1

Socket Specifications

Part Number	70-750EL8-1	70-750EL11-1
Contact Configuration	DPDT	3PDT
Number of Terminals	8	11
Mounting Style	Panel / DIN rail	Panel / DIN rail
Current Rating	16 A	16 A
Nominal Voltage Rating	300 V	300 V
Storage Temperature Range	−40 to +105 °C (−40 to +221 °F)	−40 to +105 °C (−40 to +221 °F)
Operating Temperature Range	−40 to +55 °C (−40 to +131 °F)	−40 to +55 °C (−40 to +131 °F)
Protection Category (Fingersafe)	IP20	IP20
Internal Metal Tracks	Copper Alloy, Zinc Plated	Copper Alloy, Zinc Plated
Screw Terminals	Steel, Zinc Plated	Steel, Zinc Plated
Screw Style	Combination Head	Combination Head
Screw Size	M3.5 mm	M3.5 mm
Maximum Screw Torque	9 lb-in / 1.0 N•m	9 lb-in / 1.0 N•m
Terminal Connection	Elevator	Elevator
Terminal Layout	Separate	Separate
Maximum Wire Size	**Solid Cu:** two 14–12 AWG; two 2.5–4 mm² **Stranded Cu:** two 14–12 AWG; two 2.5–4 mm²	**Solid Cu:** two 14–12 AWG; two 2.5–4 mm² **Stranded Cu:** two 14–12 AWG; two 2.5–4 mm²
DIN Rail Mounting, EN 60715	35 mm	35 mm
Chassis Mount Screw Torque	7 lb-in / 0.8 N•m	7 lb-in / 0.8 N•m
Flammability Rating	94V-0	94V-0
Weight	79 g (2.79 oz)	79 g (2.79 oz)
Agency Approvals	UL (E70550), CE, CSA (LR40787), RoHS	UL (E70550), CE, CSA (LR40787), RoHS

Dimensions, in. (mm)

70-750EL11-1

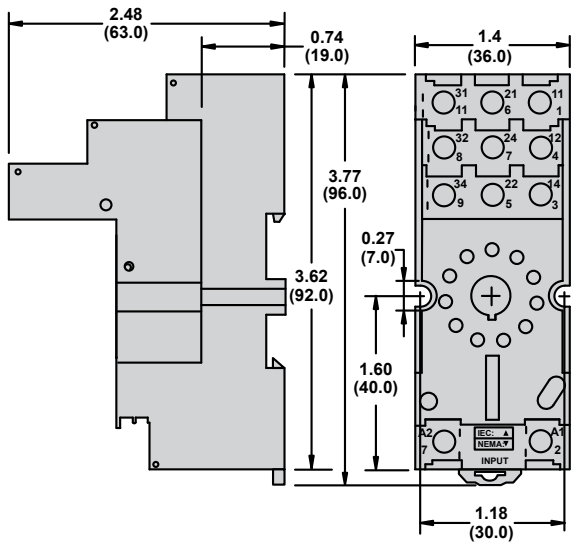

70-750EL8-1

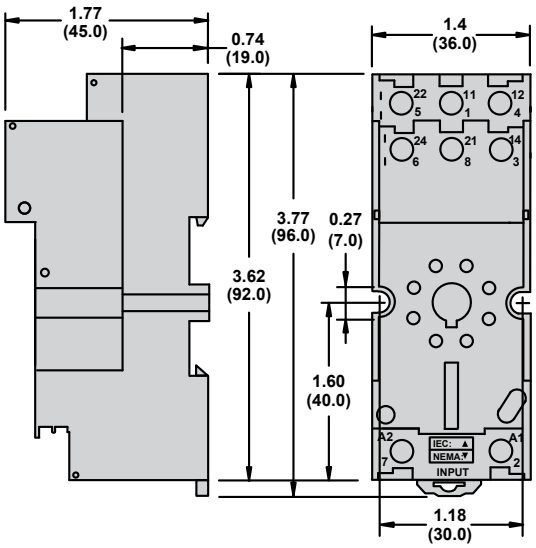

Magnecraft General Purpose Relays

Socket Specifications

70-750EL8-1, 70-750EL11-1, 70-781D5R-1A, and 70-781T-1

Wiring Diagrams

70-750EL11-1

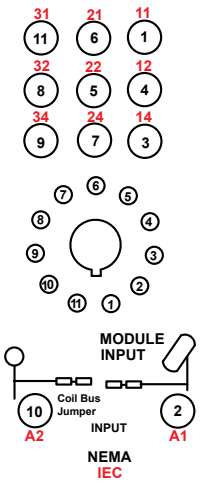

70-750EL8-1

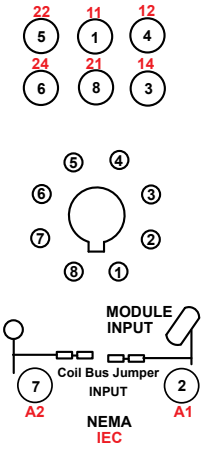

Socket Specifications

Part Number	70-781D5R-1A	70-781T-1
Contact Configuration	SPDT	SPDT
Number of Terminals	5	5
Mounting Style	Panel / DIN rail	PCB
Current Rating	16 A	10 A
Nominal Voltage Rating	300 V	300 V
Storage Temperature Range	−40 to +105 °C (−40 to +221 °F)	−40 to +105 °C (−40 to +221 °F)
Operating Temperature Range	−40 to +55 °C (−40 to +131 °F)	−40 to +55 °C (−40 to +131 °F)
Protection Category (Fingersafe)	IP20	–
Internal Metal Tracks	Copper Alloy, Zinc Plated	Copper Alloy, Zinc Plated
Screw Terminals	Steel, Zinc Plated	Copper Alloy, Zinc Plated
Screw Style	Combination Head	–
Screw Size	M3 mm / M3.5 mm	–
Maximum Screw Torque	M3 : 9 lb-in / 0.8 N•m; M3.5 : 9 lb-in / 1.0 N•m	
Terminal Connection	Screw Clamping	PCB
Terminal Layout	Mix	Mix
Maximum Wire Size	**Solid Cu:** two 14–12 AWG; two 2.5–4 mm² **Stranded Cu:** two 14–12 AWG; two 2.5–4 mm²	–
DIN Rail Mounting, EN 60715	35 mm	–
Chassis Mount Screw Torque	7 lb-in / 0.8 N•m	–
Flammability Rating	94V-0	94V-0
Weight	31 g (1.09 oz)	18 g (0.63 oz)
Agency Approvals	UL (E70550), CE, CSA (168986), RoHS	UL (E70550), CE, RoHS

Magnecraft General Purpose Relays

Socket Specifications

70-781D5R-1A and 70-781T-1

Dimensions, in. (mm)

70-781D5R-1A

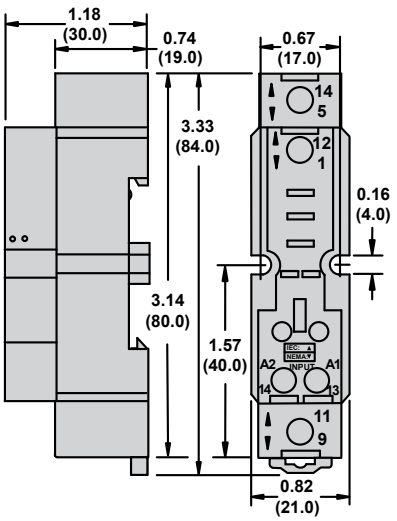

70-781T-1

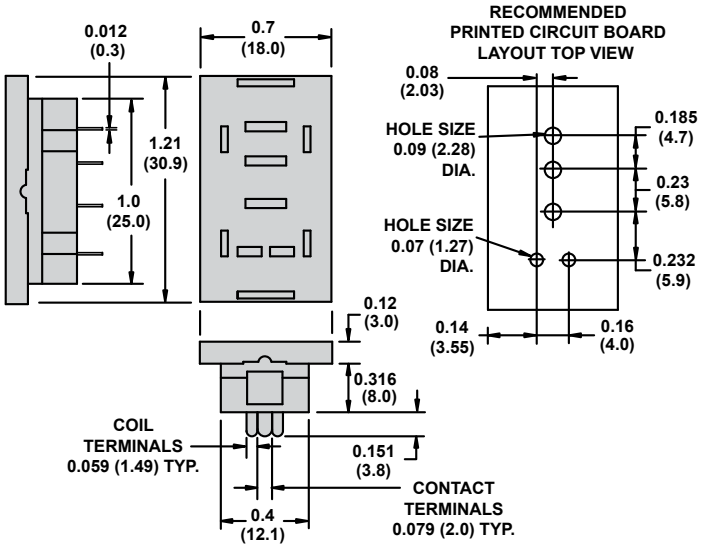

Wiring Diagrams

70-781D5R-1A

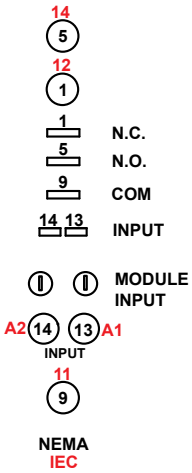

70-781T-1

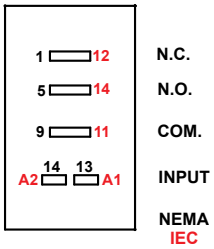

Magnecraft General Purpose Relays

Socket Specifications

70-782D8-1A and 70-782D14-1

Socket Specifications

Part Number	70-782D8-1A	70-782D14-1
Contact Configuration	DPDT	4PDT
Number of Terminals	8	14
Mounting Style	Panel / DIN rail	Panel / DIN rail
Current Rating	16 A	10 A
Nominal Voltage Rating	300 V	300 V
Storage Temperature Range	−40 to +105 °C (−40 to +221 °F)	−40 to +105 °C (−40 to +221 °F)
Operating Temperature Range	−40 to +55 °C (−40 to +131 °F)	−40 to +70 °C (−40 to +158 °F)
Protection Category (Fingersafe)	IP20	IP20
Internal Metal Tracks	Copper Alloy, Zinc Plated	Copper Alloy, Zinc Plated
Screw Terminals	Steel, Zinc Plated	Steel, Zinc Plated
Screw Style	Combination Head	Combination Head
Screw Size	M3.5 mm	M3 mm
Maximum Screw Torque	9 lb-in / 1.0 N•m	7 lb-in / 0.8 N•m
Terminal Connection	Screw Clamping	Screw Clamping
Terminal Layout	Mix	Mix
Maximum Wire Size	**Solid Cu:** two 14–12 AWG; two 2.5–4 mm² **Stranded Cu:** two 14–12 AWG; two 2.5–4 mm²	**Solid Cu:** two 14–12 AWG; two 2.5–4 mm² **Stranded Cu:** two 14–12 AWG; two 2.5–4 mm²
DIN Rail Mounting, EN 60715	35 mm	35 mm
Chassis Mount Screw Torque	7 lb-in / 0.8 N•m	7 lb-in / 0.8 N•m
Flammability Rating	94V-0	94V-0
Weight	55 g (1.94 oz)	62 g (2.19 oz)
Agency Approvals	UL (E70550), CE, CSA (LR40787), RoHS	UL (E70550), CE, CSA (LR40787), RoHS

Dimensions, in. (mm)

70-782D8-1A

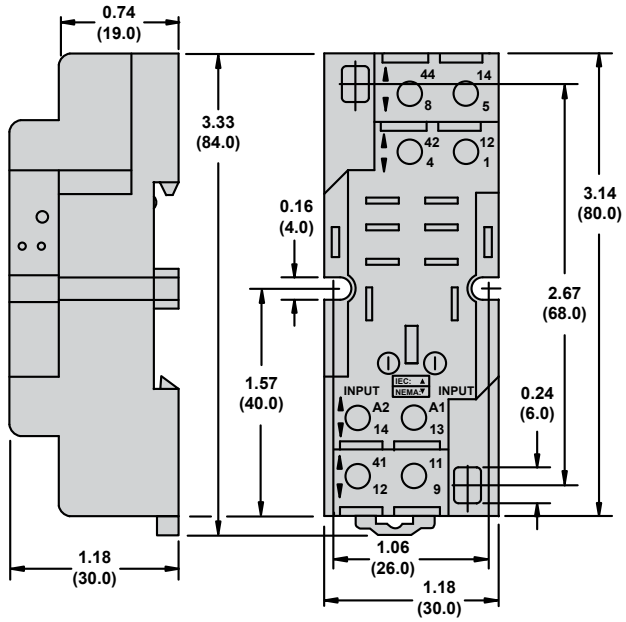

70-782D14-1

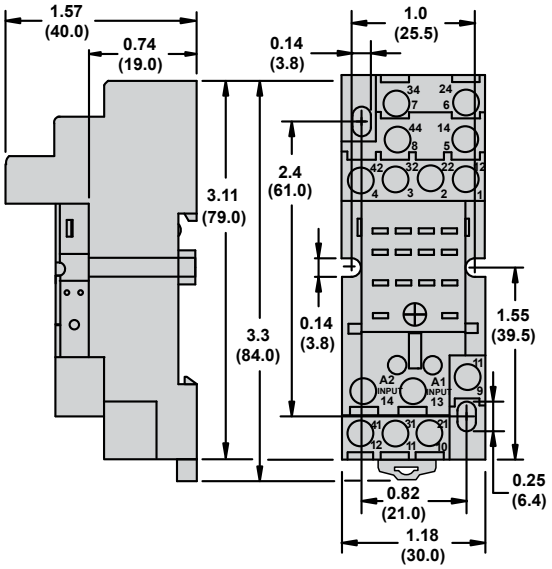

Magnecraft General Purpose Relays

Socket Specifications

70-782D8-1A, 70-782D14-1, 70-782E14-1, and 70-782EL8-1

Wiring Diagrams

70-782D8-1A

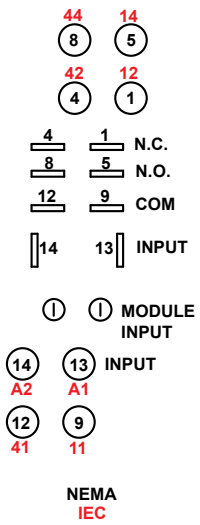

70-782D14-1

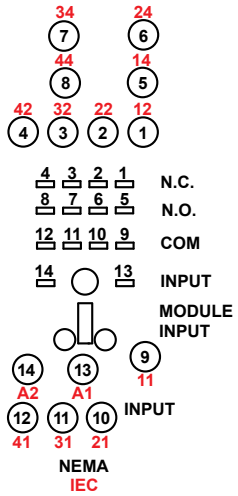

Socket Specifications

Part Number	70-782E14-1	70-782EL8-1
Contact Configuration	4PDT	DPDT
Number of Terminals	14	8
Mounting Style	Panel / DIN rail	Panel / DIN rail
Current Rating	10 A	12 A
Nominal Voltage Rating	300 V	300 V
Storage Temperature Range	−40 to +105 °C (−40 to +221 °F)	−40 to +105 °C (−40 to +221 °F)
Operating Temperature Range	−40 to +70 °C (−40 to +158 °F)	−40 to +55 °C (−40 to +131 °F)
Protection Category (Fingersafe)	IP20	IP20
Internal Metal Tracks	Copper Alloy, Zinc Plated	Copper Alloy, Zinc Plated
Screw Terminals	Steel, Zinc Plated	Steel, Zinc Plated
Screw Style	Combination Head	Combination Head
Screw Size	M3 mm	M3.5 mm
Maximum Screw Torque	7 lb-in / 0.8 N•m	9 lb-in / 1.0 N•m
Terminal Connection	Elevator	Elevator
Terminal Layout	Separate	Separate
Maximum Wire Size	**Solid Cu:** two 16–14 AWG; two 1.5–2.5 mm² **Stranded Cu:** two 16–14 AWG; two 1.5–2.5 mm²	**Solid Cu:** two 14–12 AWG; two 2.5–4 mm² **Stranded Cu:** two 14–12 AWG; two 2.5–4 mm²
DIN Rail Mounting, EN 60715	35 mm	35 mm
Chassis Mount Screw Torque	7 lb-in / 0.8 N•m	7 lb-in / 0.8 N•m
Flammability Rating	94V-0	94V-0
Weight	56 g (1.98 oz)	46 g (1.62 oz)
Agency Approvals	UL (E70550) CE, CSA (LR40787), RoHS	UL (E70550), CE, CSA (LR40787), RoHS

Magnecraft General Purpose Relays

Socket Specifications

70-782E14-1 and 70-782EL8-1

Dimensions, in. (mm)

70-782EL8-1

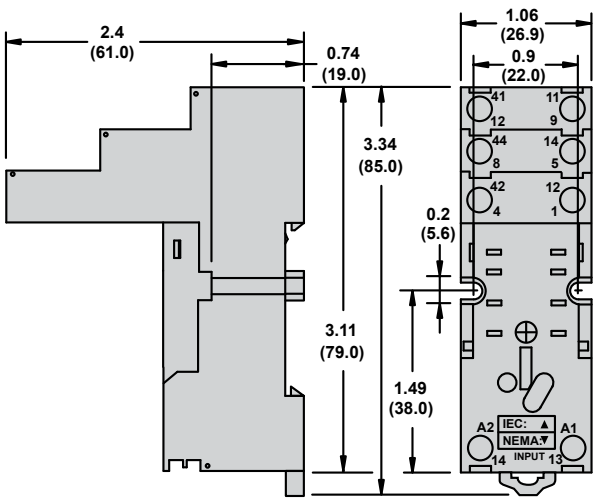

70-782E14-1

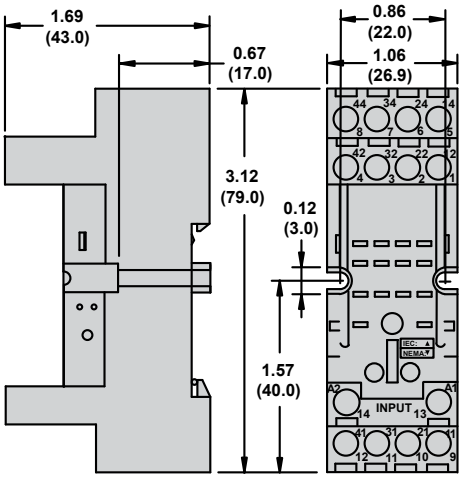

Wiring Diagrams

70-782EL8-1

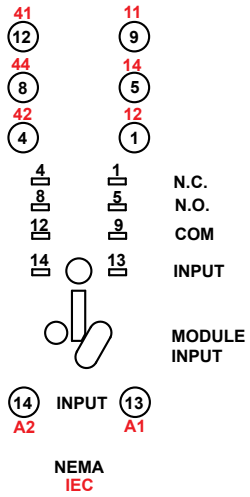

70-782E14-1

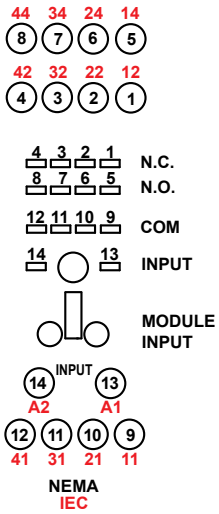

Socket Specifications

Part Number	70-782EL14-1
Contact Configuration	4PDT
Number of Terminals	14
Mounting Style	Panel / DIN rail
Current Rating	10 A
Nominal Voltage Rating	300 V
Storage Temperature Range	−40 to +105 °C (−40 to +221 °F)
Operating Temperature Range	−40 to +70 °C (−40 to +158 °F)
Protection Category (Fingersafe)	IP20
Internal Metal Tracks	Copper Alloy, Zinc Plated
Screw Terminals	Steel, Zinc Plated
Screw Style	Combination Head
Screw Size	M3 mm
Maximum Screw Torque	7 lb-in / 0.8 N•m
Terminal Connection	Elevator
Terminal Layout	Separate
Maximum Wire Size	**Solid Cu:** two 16–14 AWG; two 1.5–2.5 mm² **Stranded Cu:** two 16–14 AWG; two 1.5–2.5 mm²
DIN Rail Mounting, EN 60715	35 mm
Chassis Mount Screw Torque	7 lb-in / 0.8 N•m
Flammability Rating	94V-0
Weight	62 g (2.19 oz)
Agency Approvals	UL (E70550), CE, CSA (LR40787), RoHS

Dimensions, in. (mm)

70-782EL14-1

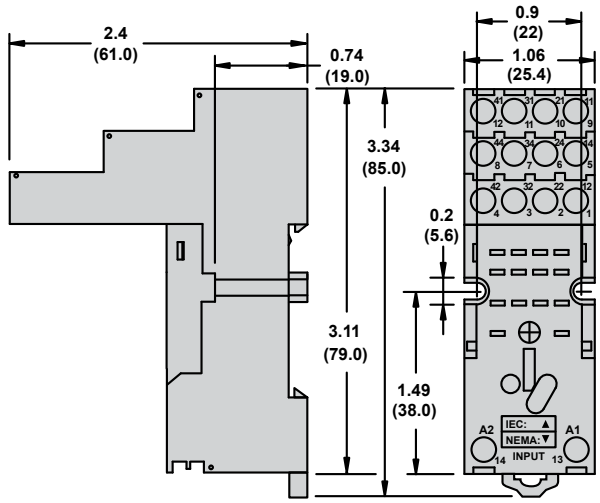

Wiring Diagram

70-782EL14-1

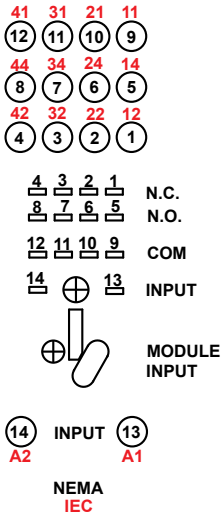

Socket Specifications

Part Number	70-783D11-1A	70-784D14-1
Contact Configuration	3PDT	4PDT
Number of Terminals	11	14
Mounting Style	Panel / DIN rail	Panel / DIN rail
Current Rating	16 A	16 A
Nominal Voltage Rating	300 V	300 V
Storage Temperature Range	−40 to +105 °C (−40 to +221 °F)	−40 to +105 °C (−40 to +221 °F)
Operating Temperature Range	−40 to +55 °C (−40 to +131 °F)	−40 to +55 °C (−40 to +131 °F)
Protection Category (Fingersafe)	IP20	IP20
Internal Metal Tracks	Copper Alloy, Zinc Plated	Copper Alloy, Zinc Plated
Screw Terminals	Steel, Zinc Plated	Steel, Zinc Plated
Screw Style	Combination Head	Combination Head
Screw Size	M3.5 mm	M3.5 mm
Maximum Screw Torque	9 lb-in / 1.0 N•m	9 lb-in / 1.0 N•m
Terminal Connection	Screw Clamping	Screw Clamping
Terminal Layout	Mix	Mix
Maximum Wire Size	**Solid Cu:** two 14–12 AWG; two 2.5–4 mm² **Stranded Cu:** two 14–12 AWG; two 2.5–4 mm²	**Solid Cu:** two 14–12 AWG; two 2.5–4 mm² **Stranded Cu:** two 14–12 AWG; two 2.5–4 mm²
DIN Rail Mounting, EN 60715	35 mm	35 mm
Chassis Mount Screw Torque	7 lb-in / 0.8 N•m	7 lb-in / 0.8 N•m
Flammability Rating	94V-0	94V-0
Weight	55 g (1.94oz)	62 g (2.19 oz)
Agency Approvals	CE, RoHS, UL (E70550), CSA (LR40787)	CE, RoHS, UL (E70550), CSA (LR40787)

Magnecraft General Purpose Relays

Socket Specifications

70-783D11-1A and 70-784D14-1

Dimensions, in. (mm)

70-783D11-1A

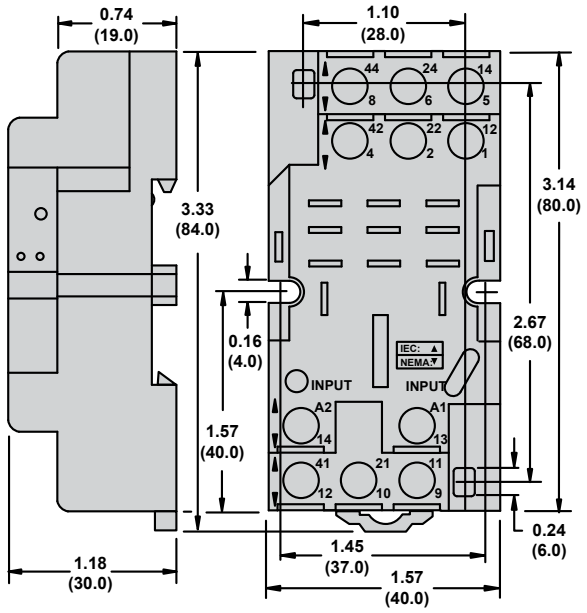

70-784D14-1

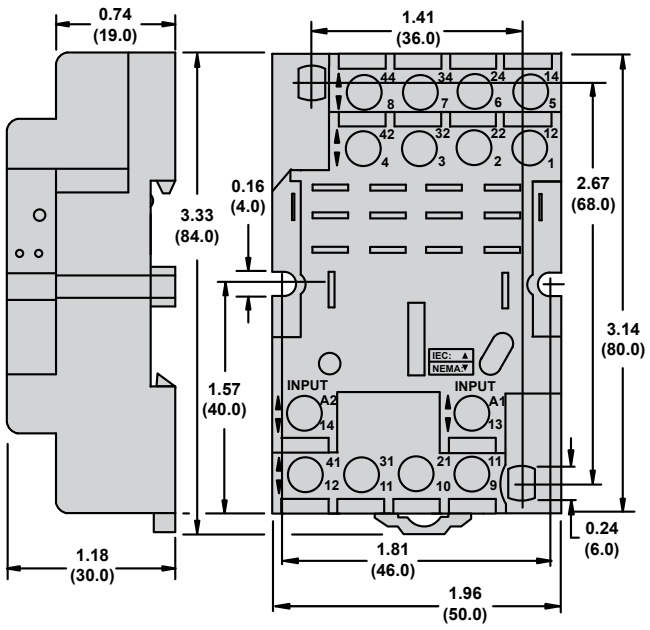

Wiring Diagrams

70-783D11-1A

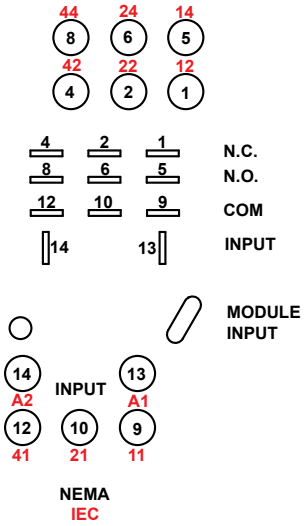

70-784D14-1

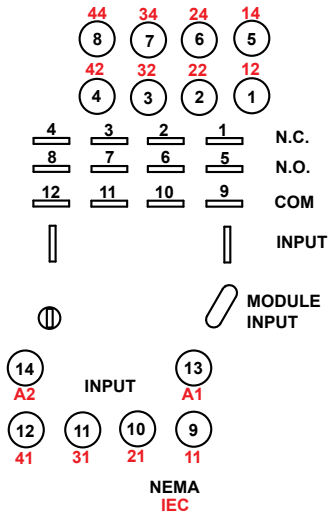

Socket Specifications

Part Number	70-788EL11-1
Contact Configuration	3PDT
Number of Terminals	11
Mounting Style	DIN rail
Current Rating	25 A
Nominal Voltage Rating	300 V
Storage Temperature Range	−40 to +105 °C (−40 to +221 °F)
Operating Temperature Range	−40 to +55 °C (−40 to +131 °F)
Protection Category (Fingersafe)	IP20
Internal Metal Tracks	Copper Alloy, Zinc Plated
Screw Terminals	Steel, Zinc Plated
Screw Style	Combination Head
Screw Size	M3.5 mm
Maximum Screw Torque	9 lb-in / 1.0 N•m
Terminal Connection	Elevator
Terminal Layout	Separate
Maximum Wire Size	**Solid Cu:** two 14–10 AWG; two 2.5–6 mm² **Stranded Cu:** two 14–10 AWG; two 2.5–6 mm²
DIN Rail Mounting, EN 60715	35 mm
Chassis Mount Screw Torque	7 lb-in / 0.8 N•m
Flammability Rating	94V-0
Weight	96 g (3.39 oz)
Agency Approvals	UL (E70550), CE, CSA (LR40787), RoHS

Dimensions, in. (mm)

70-788EL11-1

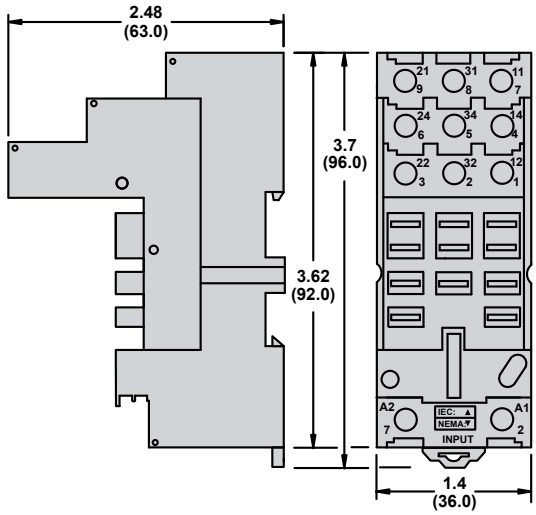

Wiring Diagram

70-788EL11-1

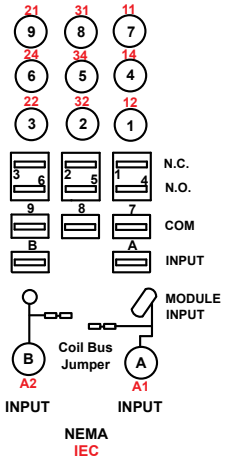

Mounting Adapter Specifications

Part Number	16-781C	16-782C	16-783C	16-784C	16-781C1	16-782C2	16-783C1	16-784C1
Mounting Style	DIN rail / panel				Panel			
Mating Relays	781R Series	792 Series 782 Series	783 Series	784 Series	781R Series	792 Series 782 Series	783 Series	784 Series
Agency Approvals	RoHS							

Key Features

- No need to purchase a socket
- DIN or Panel mounting
- Plastic construction
- Light weight
- Low cost
- Low profile
- Write-on label
- Narrow mounting
- Easy termination

Mounting Adapter Dimensions, in. (mm)

All DIN Adapters

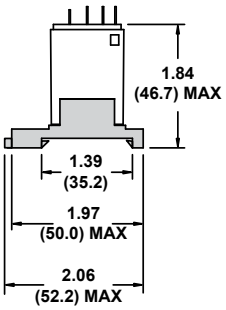

16-781C

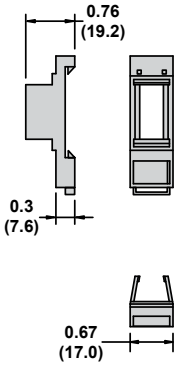

16-782C

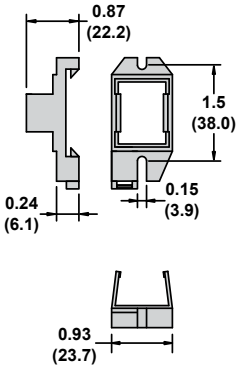

16-783C

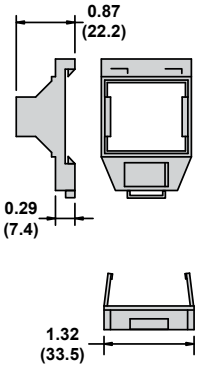

16-784C

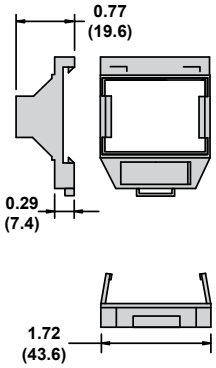

All Flange Adapters

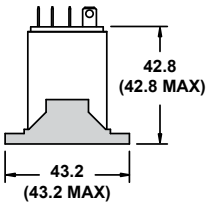

16-781C1

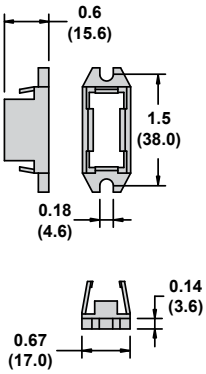

16-782C1

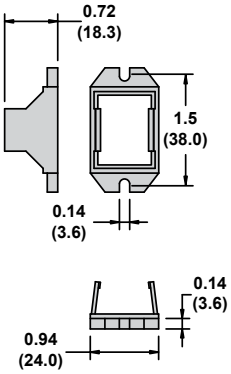

16-783C1

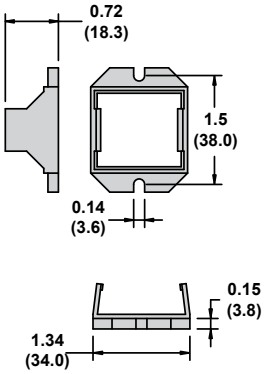

16-784C1

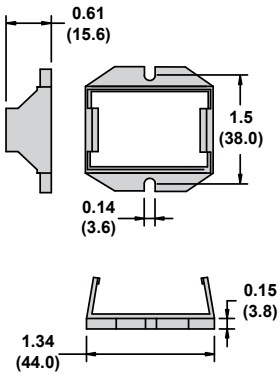

Magnecraft General Purpose Relays

Socket Accessories

- Overview 67
- Hold-Down Clips 68
- Insulated Coil Bus Jumper System 71
- DIN Rail and DIN Clip 71
- ID Tags 71
- Panel Mount Adapter 72
- Socket Modules 72

Product Overview

Hold-Down Clips
Safely secure the relay to the socket. Available in plastic or stainless steel.

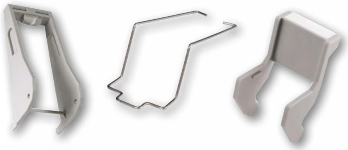

Socket Modules
Allow for optional circuit protection (Diode, MOV or RC) or status indicator LED. Modules plug into mating sockets.

DIN Rail and Locking End Clip
Enables quick installation and removal of sockets.

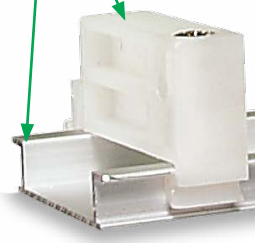

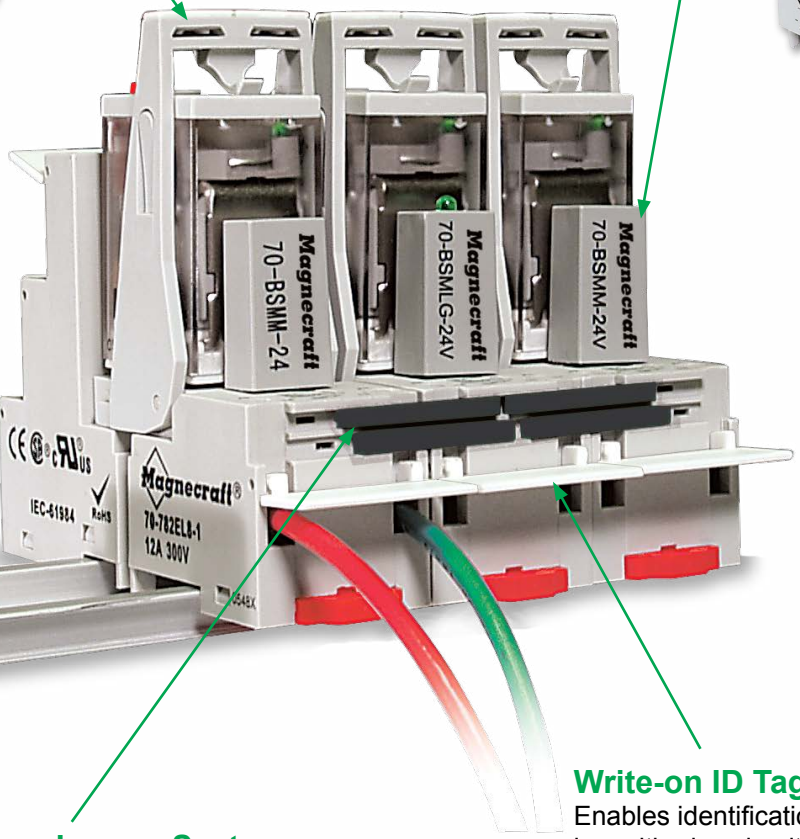

Insulated Coil Bus Jumper System
Allows for connection to adjacent sockets without any additional wiring, or any tools.

Write-on ID Tags
Enables identification of relays in multi-relay circuits. Tag snaps onto mating socket.

Magnecraft General Purpose Relays

Socket Accessories

Hold-Down Clips

Use the table below to easilty select Magnecraft hold-down clips based on socket and relay compatibility.

Key Features

- Stainless steel spring clips: secure the relay to the socket in harsh environments
- Plastic ejector clips: secure and eject relays from tight, multi-socket applications
- Plastic ID clips: allow for easy identification of circuits in multi-relay applications; include an ID tag with each clip

Socket Part Number	Relays	Clip Part Number	Clip Type
70-124-2	788XBXR / 788XCXR	16-1351	Spring Clip
70-178-1	788XBXR / 788XCXR	16-1351	Spring Clip
70-178-2	788XBXR / 788XCXR	16-1351	Spring Clip
70-378-1	792XDX Control, 782XDXH	16-1342	Spring Clip
70-379-1	792XDX Control, 782XDXH	16-1342	Spring Clip
70-401-1	782XBX Power	16-1342	Spring Clip
70-402-1	782XBX Power	16-1342	Spring Clip
70-459-1	782XBX Power	16-1342	Spring Clip
70-461-1	792XDX Control, 782XDXH	16-1342	Spring Clip
70-463-1	788XBXR / 788XCXR	16-1351	Spring Clip
70-464-1	750XBXR, 750XBXH	16-1351	Spring Clip
70-465-1	750XCXR, 750XCXH	16-1351	Spring Clip
70-750DL8-1	750XBXR	16-1332	Spring Clip
	750XBXH	16-1351	Spring Clip
70-750DL11-1	750XCXR	16-1332	Spring Clip
	750XCXH	16-1351	Spring Clip
70-750E8-1	750XBXR	16-1344	Spring Clip
	750XBXR, 750XBXH	16-1351	Spring Clip
70-750E11-1	750XCXR, 750XCXH	16-1351	Spring Clip
70-750EL8-1	750XBXR	16-1351	Spring Clip
70-750EL11-1	750XCXR	16-1351	Spring Clip
70-781D5R-1A	781XAXR	16-781IDC	ID Clip
		16-781SC	Spring Clip
70-781T-1	781XAXR	16-781SC	Spring Clip
70-782D8-1A	782XBX Power	16-1342	Spring Clip
		16-782IDC	ID Clip
	782XBX Power (full-feature cover only)	16-782PC-1	Ejector Clip
70-782D14-1	792XBX / 792XDX Control	16-782SC	Spring Clip
	792XBX / 792XDX Control (full-feature cover only)	16-782PC-1	Ejector Clip
	782XDXH	16-1342	Spring Clip
70-782E14-1	792XBX / 792XDX Control	16-782SC	Spring Clip
	792XBX / 792XDX Control (full-feature cover only)	16-782PC-1	Ejector Clip
	782XDXH	16-1342	Spring Clip
70-782EL8-1	792XBX Control	16-782SC	Spring Clip
	792XBX Control (full-feature cover only)	16-782PC-1	Ejector Clip
70-782EL14-1	792XBX / 792XDX Control	16-782SC	Spring Clip
	792XBX / 792XDX Control (full-feature cover only)	16-782PC-1	Ejector Clip
	782XDXH	16-1342	Spring Clip
70-783D11-1A	783XCX	16-783IDC	ID Clip
		16-783SC	Spring Clip
70-784D14-1	784XDX	16-784IDC	ID Clip
		16-784SC	Spring Clip
70-788EL11-1	788XBXR / 788XCXR	16-1351	Spring Clip

Hold-Down Clip Dimensions, in. (mm)

16-781IDC

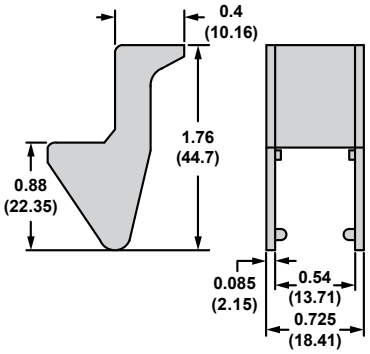

16-781SC

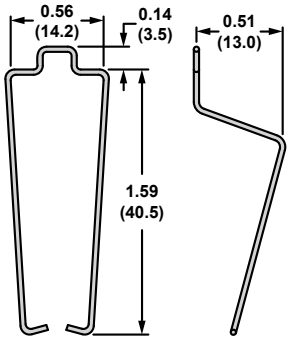

16-782IDC

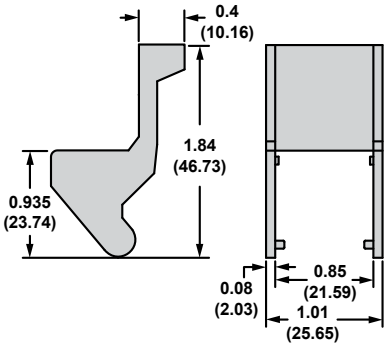

16-782PC

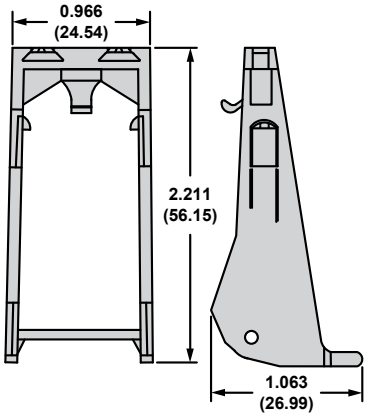

16-782SC

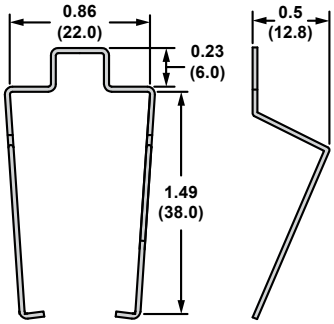

16-783IDC

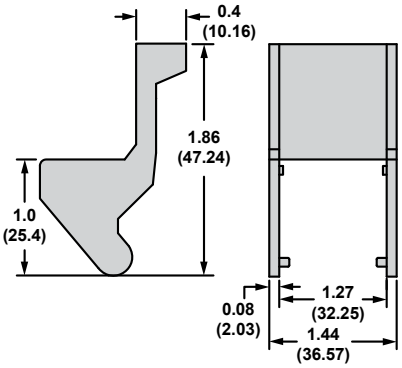

16-783SC

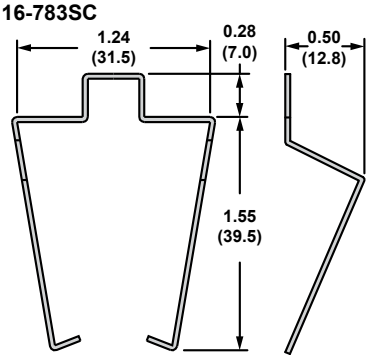

16-784IDC

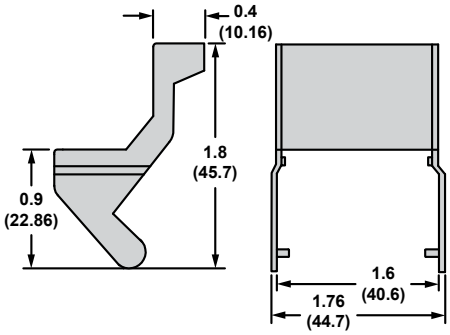

16-784SC

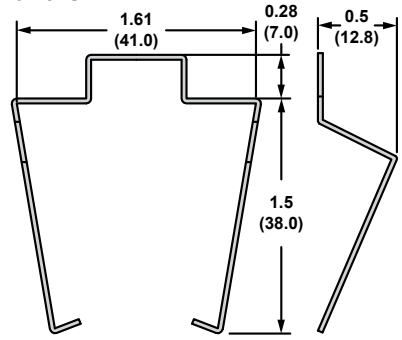

Hold-Down Clip Dimensions *(continued)*, in. (mm)

16-1332

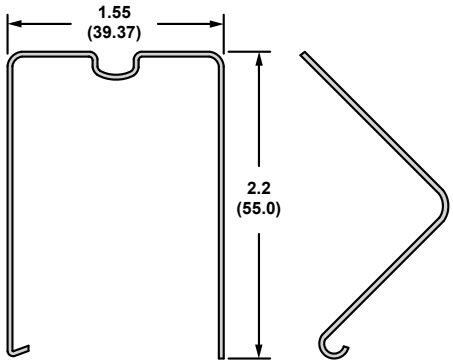

16-1342

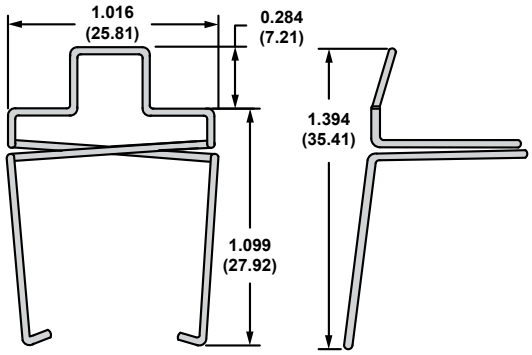

16-1344

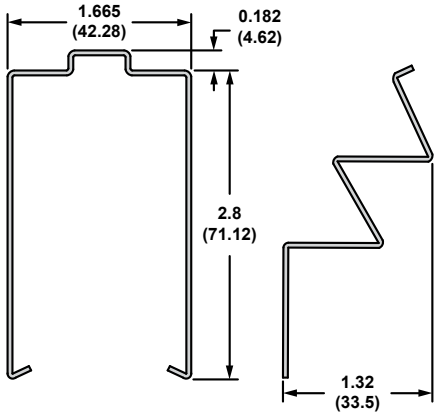

16-1351

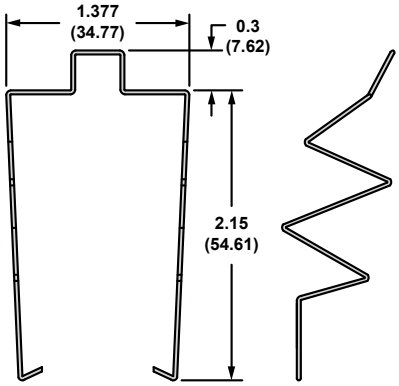

Insulated Coil Bus Jumper Dimensions, in. (mm)

16-750/788CBJ-1 Coil Bus Jumper

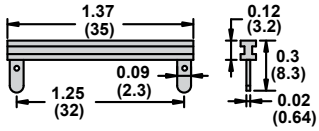

16-750/788CBJ-1 Coil Bus Jumper

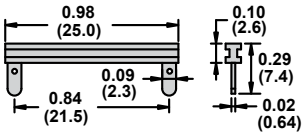

DIN Rail and DIN Clip Dimensions, in. (mm)

16-700DIN Metal DIN Rail

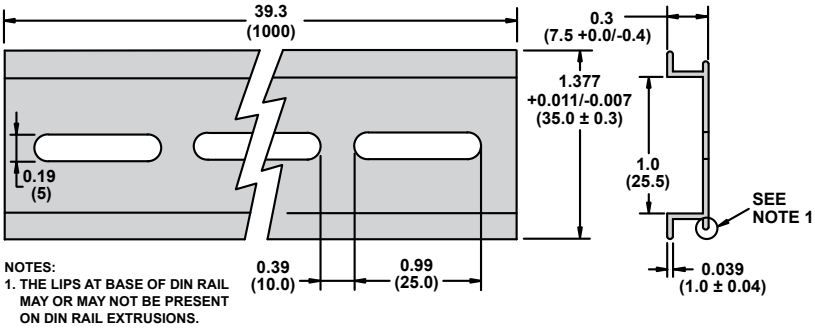

NOTES:
1. THE LIPS AT BASE OF DIN RAIL MAY OR MAY NOT BE PRESENT ON DIN RAIL EXTRUSIONS.

16-DCLIP-1 DIN Rail Clip

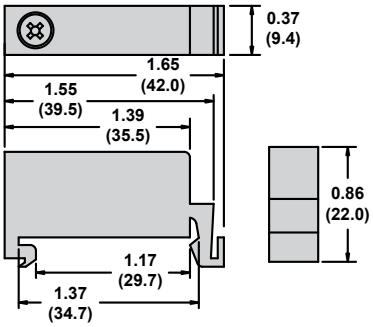

ID Tag Dimensions, in. (mm)

16-700ST-1 ID Tag/Label

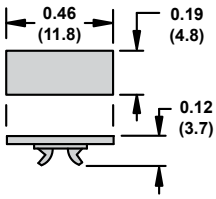

16-750/788FT-1 ID Tag/Label

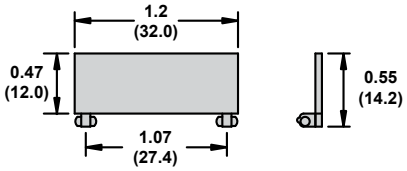

16-782FT-1 ID Tag/Label

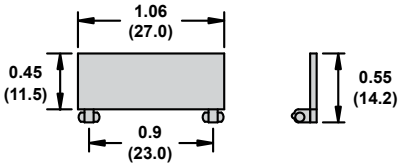

Panel Mount Adapter Dimensions, in. (mm)

16-788C1 Panel Mount Adapter

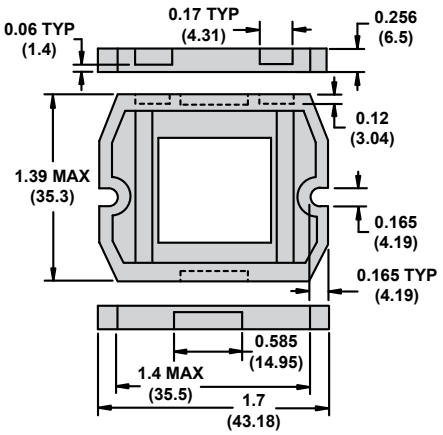

Socket Module Dimensions, in. (mm)

70-ASM Socket Modules

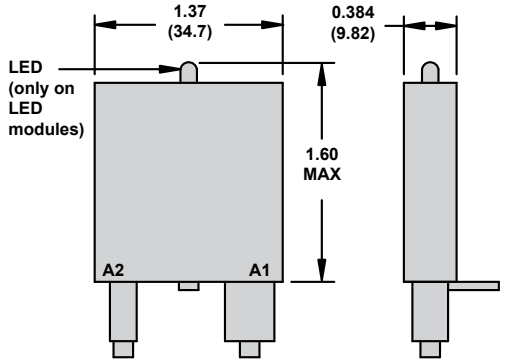

70-BSM Socket Modules

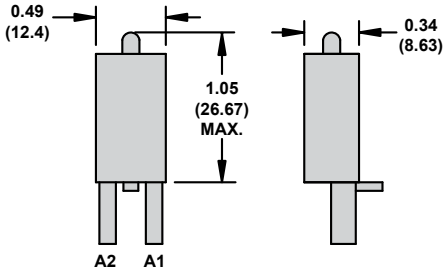

Socket Module Wiring Diagrams

70-ASM & 70-BSM Socket Modules

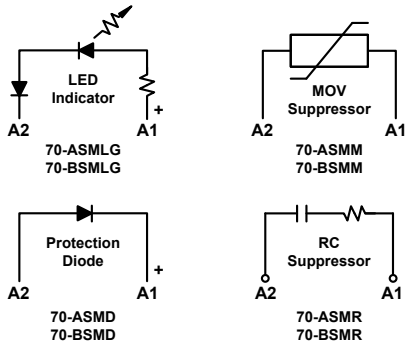

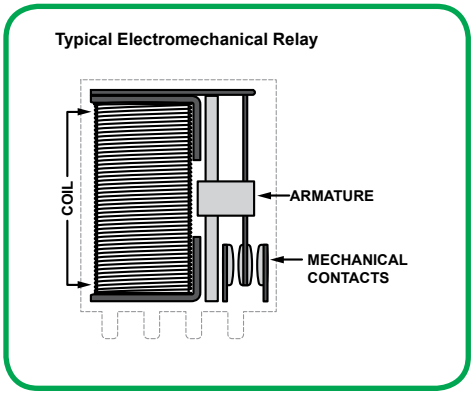

General Purpose Relays

General purpose relays are electromechanical relays which consist of a coil, armature and contacts (see figure at left).

Principle of Operation

When power is applied to the coil, the resulting magnetic field causes the armature to move and the contacts to open or close.

Applications

With multiple options, features, and available accessories, Magnecraft general purpose relays offer a complete system solution to improve your design, expedite installation, and simplify testing of your application.

Typical Examples of General Purpose Relay Applications

Automation Panels
Process controls, motor controls, standby lighting

Food & Beverage
Commercial/industrial cooking equipment, filtration systems, bottling, chillers, convection ovens

Packaging Machinery
Conveyor motors, food processors, product/shrink wrap, solenoid controls

Lighting Control
Traffic signal systems, motorway information systems, theatrical lighting, ballast lighting

Power Supplies
Universal power supplies, battery backup systems

Material Handling
Motor control, conveyor controls

HVAC & Refrigeration
Anti-condensation equipment, compressor controls, blower controls, motorized duct/vent controls

Appliances
Air conditioners, water heaters, portable heaters, spa controls, water pumps

Magnecraft General Purpose Relays

The Magnecraft website **(www.serelays.com)** is designed to help you easily find the proper relay to fit your design requirements, and to help you simplify and shorten your workflow.

Easily find the proper relay to fit your design requirements

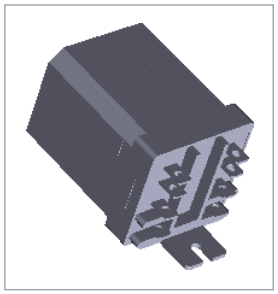

3D Models

■ Online Catalog

Find the right product by choosing specifications, comparing products side-by-side, and viewing technical specifications, 2D and 3D drawings, and associated accessories.

■ Cross-Reference Search

Search our comprehensive database to identify products by manufacturer and part number, and link directly to part specifications.

■ 3D CAD Library

View, email, download, or insert a file directly into your open CAD software. There are 18 different file formats to choose from.

■ Order Free Samples

Magnecraft offers free samples as a courtesy to individuals and companies evaluating our products for their designs and applications. Sample orders are subject to approval.

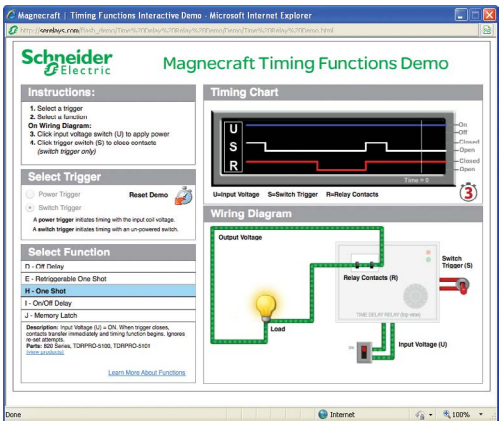

Time Delay Relay Demo

Simplify and shorten your workflow

■ Interactive Tools

View interactive demonstrations, such as our Time Delay Relay Interactive Demo (left), which visually demonstrates the ten different timing functions offered on Magnecraft time delay relays.

■ Distributor Inventory Search

Search authorized distributors' current Magnecraft inventory and buy online. (Buy online not available for all distributors).

Schneider Electric USA, Inc.
1300 S. Wolf Rd.
Des Plaines, IL 60018
Tel: 847-441-2540
www.serelays.com

Electrical equipment should be installed, operated, serviced, and maintained only by qualified personnel. No responsibility is assumed by Schneider Electric for any consequences arising out of the use of this material.

© 2012–2015 Schneider Electric. All Rights Reserved.
Schneider Electric and Fingersafe are trademarks of Schneider Electric SE, its subsidiaries and affiliated companies. All other trademarks are the property of their respective owners.

8501CT1105R01/15, 03/2015
Replaces 8501CT1105R09/14 dated 09/2014

Общество с ограниченной ответственностью «МосЧип» ИНН 7719860671 / КПП 771901001
Адрес: 105318, г.Москва, ул.Щербаковская д.3, офис 1107

Данный компонент на территории Российской Федерации

Вы можете приобрести в компании MosChip.

Для оперативного оформления запроса Вам необходимо перейти по данной ссылке:

http://moschip.ru/get-element

Вы можете разместить у нас заказ для любого Вашего проекта, будь то серийное производство или разработка единичного прибора.

В нашем ассортименте представлены ведущие мировые производители активных и пассивных электронных компонентов.

Нашей специализацией является поставка электронной компонентной базы двойного назначения, продукции таких производителей как XILINX, Intel (ex.ALTERA), Vicor, Microchip, Texas Instruments, Analog Devices, Mini-Circuits, Amphenol, Glenair.

Сотрудничество с глобальными дистрибьюторами электронных компонентов, предоставляет возможность заказывать и получать с международных складов практически любой перечень компонентов в оптимальные для Вас сроки.

На всех этапах разработки и производства наши партнеры могут получить квалифицированную поддержку опытных инженеров.

Система менеджмента качества компании отвечает требованиям в соответствии с ГОСТ Р ИСО 9001, ГОСТ РВ 0015-002 и ЭС РД 009

Офис по работе с юридическими лицами:

105318, г.Москва, ул.Щербаковская д.3, офис 1107, 1118, ДЦ «Щербаковский»

Телефон: +7 495 668-12-70 (многоканальный)

Факс: +7 495 668-12-70 (доб.304)

E-mail: info@moschip.ru

Skype отдела продаж:
moschip.ru
moschip.ru_4
moschip.ru_6
moschip.ru_9