Data Sheet

AR18 and AR35 Series

Miniature Programmable Single-Turn Absolute Encoder with Resolution Ranging from 17 bits to 21 Bits

Description

The Broadcom® AR18 and AR35 Series are the miniature Absolute Encoder ASIC designed to cater for the growing demand on the space constraint application.

The AR18 encoder is designed for an overall diameter of 18 mm and offers user-programmable resolution ranging from 17, 19, and 21 bit single-turn absolute output. The AR35 encoder is designed for an overall diameter of 35 mm and offers 17 and 21 bits single-turn absolute output.

Both the AR18 and AR35 series provide the incremental ABI and UVW in differential mode. Both come with a recommended high temperature range of –40°C to 115°C suitable for most industrial applications. Dual-mode operating voltage of 3.3V and 5V enable handheld and portable device applications.

Employing Broadcom patented Reflective Optical Encoding Theory, the AR18 and AR35 series offer a high accuracy with correction, which is unattainable by the magnetic encoder.

Features

- Miniature absolute encoder ASIC surface mount DFN package: 10.9 mm (L) x 9.1 mm (W) x 1.5 mm (H)
- User-programmable resolution ranging from:
  - 17, 19, and 21 bit single turn (OD18).
  - 17 and 21 bit single turn (OD35).
- User-programmable incremental output (ABI) resolution ranging from 128 to 8192 CPR
- User-programmable commutation signal (UVW) ranging from 2, 3, 4, 5, 12, 30, 32 pole pair
- Differential output for ABI and UVW
- High temperature range of –40°C to 115°C suitable for most of the industrial operation.
- Dual-mode operating voltage of 3.3V and 5V, enabling handheld and portable device applications.
- Selectable SSI mode communication protocol.
- Selectable RS485 mode communication protocol.
- RoHs compliance.

Applications

- Robotic automation and engineering
- Factory automation and drone
- Medical and dentistry, devices and equipment
- High-accuracy portable and handheld devices
- Miniature motor, servo motor, linear actuator

Functional Block Diagram

With SSI 3-Wire Communication Protocol Selection

Figure 1: SSI 3-Wire Block Diagram

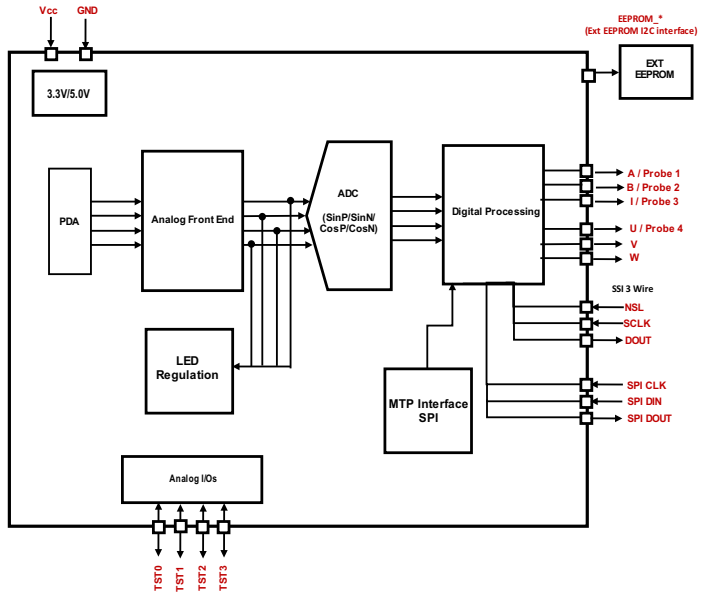

With ESL Communication Protocol Selection

Figure 2: ESL Block Diagram

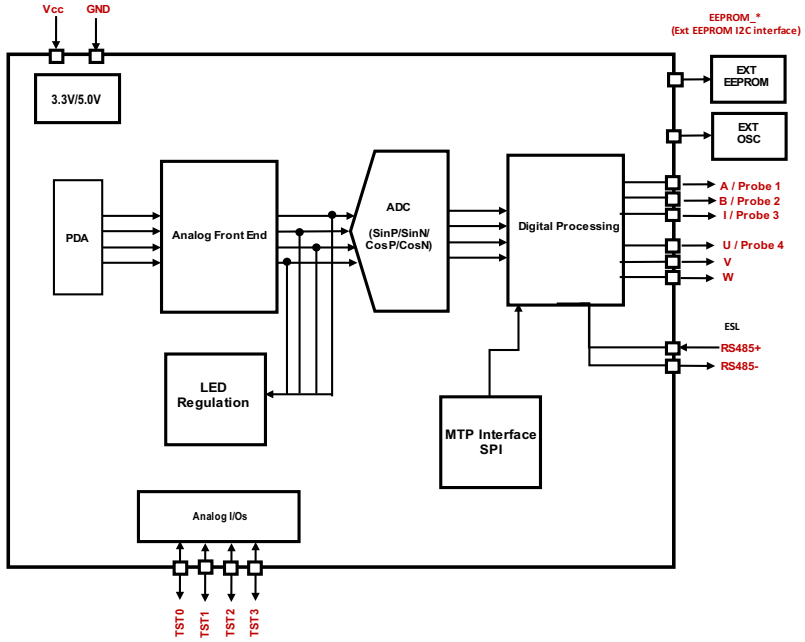

Mechanical Specifications

DFN Package Dimensions

Figure 3: Overall Package Dimensions and Pinout

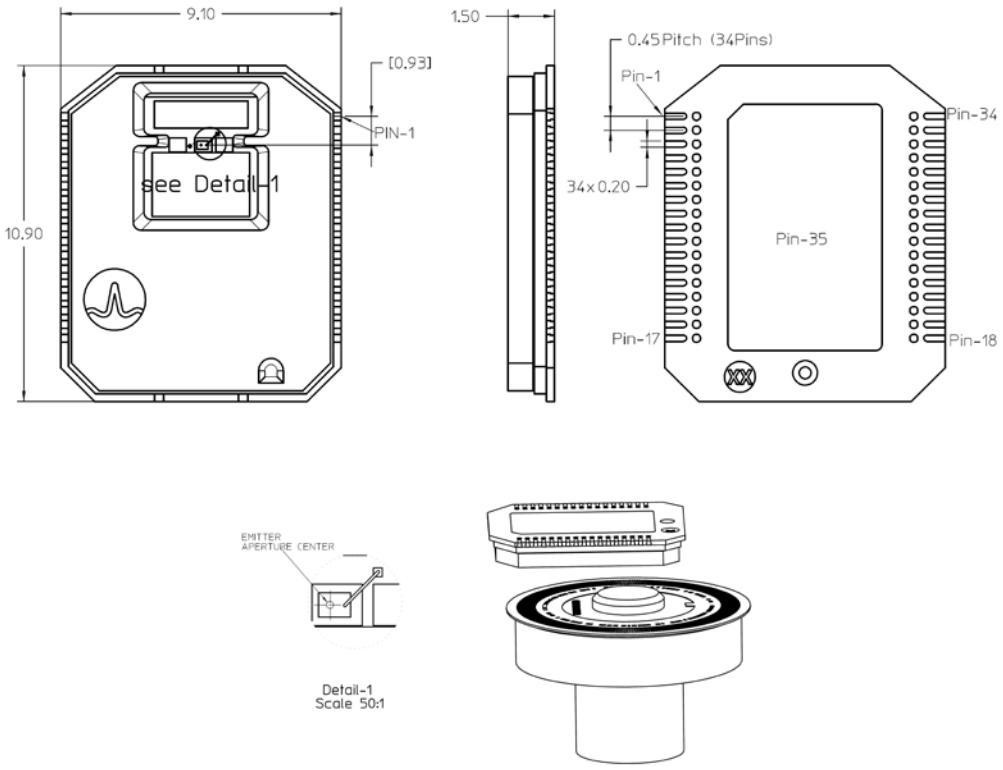

Note: All dimensions given in mm. Tolerances of form and position according to JEDEC MO-220.

Package Markings

Figure 4: Product Marking Information

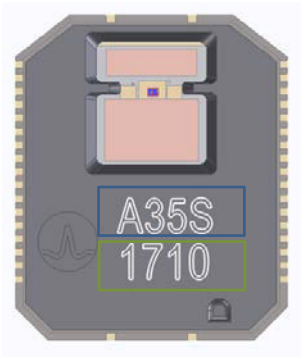

Part Type

- A18S/E
- A35S/E

Date Code

YYWW (Year, Work Week)

Encoder Mounting

Figure 5: Encoder Mounting Guide

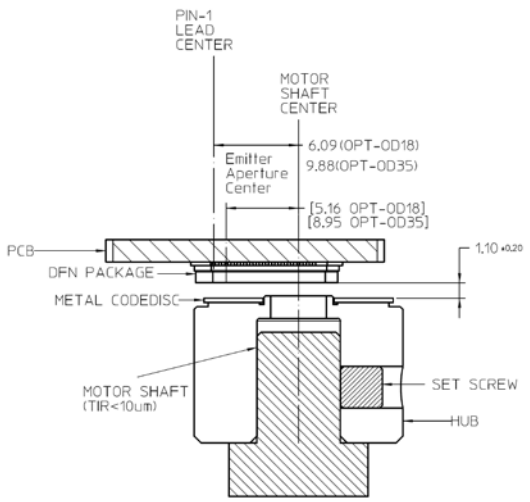

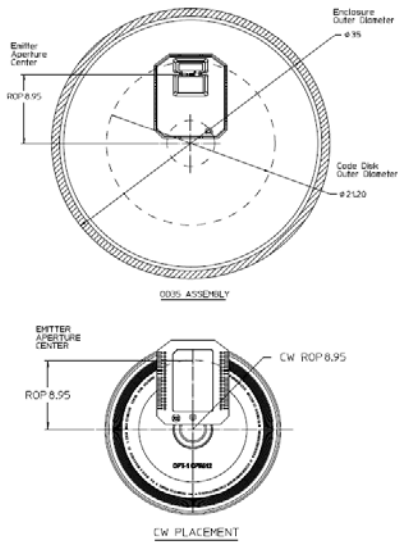

AR35

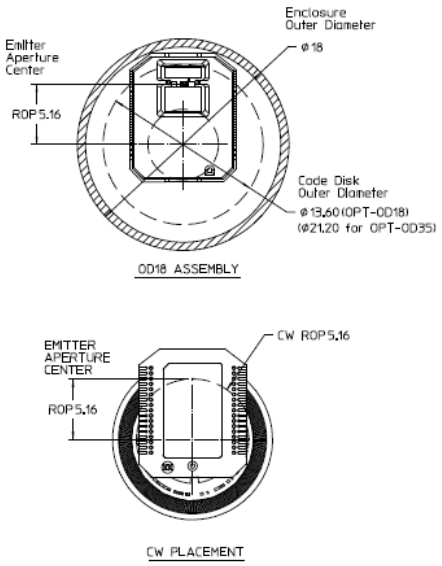

AR18

Notes of assembly:

- The assembly of the encoder needs clean room condition, Class 100k or better.
- The encoder needs to be enclosed with IP50 enclosure.

Recommended PCB Land Pattern

Figure 6: PCB Land Pattern

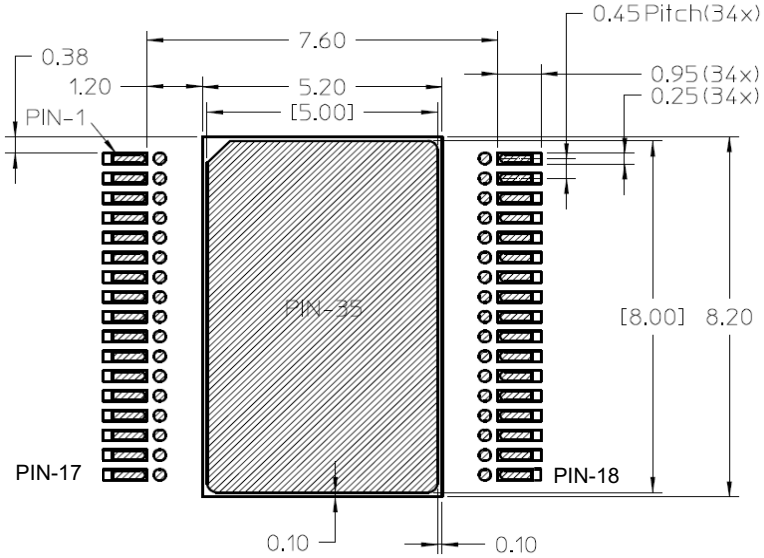

SMT Reflow Profile: JEDEC Pb-Free (J-STD-020D)

Electrical Specifications

Recommended Operating Conditions

Parameter	Symbol	Value			Unit	Notes
		Min	Typical	Max		
DC Supply Voltage	V_{dd}	+4.5	+5.0	+5.5	V	
DC Supply Voltage	V_{dd}	+3.0	+3.3	+3.6	V	
Ripple of Supply Voltage		—	—	100	mVpp	100 kHz
Ambient Temperature	T_{amb}	—	+25	—	°C	
Operational Temperature	T_A	–40	+25	+115	°C	
Storage Temperature	T_S	–40	+25	+115	°C	
Humidity	RH	—	—	85	%	Temp = 40°C
INC Operating Frequency		—	—	128	kHz	Velocity (rpm) x CPR/60
Radial Misalignment		–200	0	+200	µm	
Tangential Misalignment		–200	0	+200	µm	
Encoder Shaft Speed	SRPM	—	—	30000	rpm	256CPR (AR18)
Encoder Shaft Speed	SRPM	—	—	15000	rpm	512CPR (AR35)

Absolute Maximum Ratings

Parameter	Symbol	Value
Storage Temperature	T_S	–40°C to 115°C
Operating Temperature	T_A	–40°C to 115°C
Supply Voltage	V_{dd}	7V
Moisture Sensitive Level		3 (Maximum floor life = 168h)

DC Characteristics

DC characteristics over recommended operating range, typical at 25°C.

Parameter	Symbol	Conditions	Value			Unit	Notes
			Min	Typ.	Max		
V_{dd} Supply Current	I_{dd}	V_{dd} = 3.3V/5V	—	70	—	mA	
Absolute Single-Turn Resolution (AR18)			—	17, 19, and 21	—	Bit	
Absolute Single-Turn Resolution (AR35)			—	17 and 21	—	Bit	
Incremental Resolution			—	2^n	—	CPR	n = 7, 8, 9,10, 11, 12, 13

Encoder Characteristics

Incremental encoder characteristics over recommended operating range, at 25°C.

Parameter	Symbol	Min	Typ	Max[a]	Unit
Cycle Error	ΔC	—	—	45	°e
State Error	ΔS	—	—	45	°e
Index Pulse Width	Po	—	90,180, 360	—	°e

a. Maximum values represent the encoder performance across the range of recommended mounting tolerance.

Encoder Pin Functions

Figure 7: Pinouts from Top View

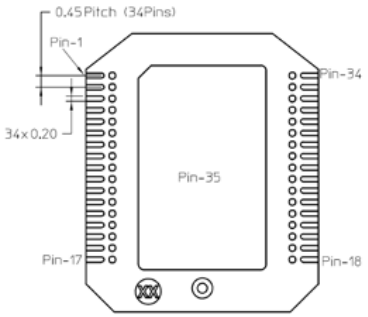

SSI 3-Wire Option Pinout Configuration

NOTE: Pin 35 must be grounded to VSSA and pin 17 connect to common GND.

Table 1: SSI 3-Wire Pinout

Pin	Name	Function	Pad Type	Analog/Digital	Input/ Output
1	CN/TST3	Analog Voltage Output NCOS	5V/3.3V pads	Analog	I/O
2	CP/TST2	Analog Voltage Output PCOS	5V/3.3V pads	Analog	I/O
3	SN/TST1	Analog Voltage Output NSIN	5V/3.3V pads	Analog	I/O
4	SP/TST0	Analog Voltage Output PSIN	5V/3.3V pads	Analog	I/O
5	SPI DOUT	SPI Data Output	3.3V/5V (VDDPAD)	Digital	Output
6	SPI DIN	SPI Data Input	3.3V/5V (VDDPAD)	Digital	Input
7	SPI CLK	SPI Clock	3.3V/5V (VDDPAD)	Digital	Input
8	VDD	Digital Supply Voltage	3.3V/5V (VDDPAD)	Digital	Power
9	VSS	Digital GND	Digital ground	Digital ground	Ground
10	+ SSI DOUT	SSI Data Output (+)	3.3V/5V (VDDPAD)	Digital	I/O
11	– SSI DOUT	SSI Data Output (–)	3.3V/5V (VDDPAD)	Digital	I/O
12	+ SSI NSL	SSI Input (+)	3.3V/5V (VDDPAD)	Digital	I/O
13	– SSI NSL	SSI Input (–)	3.3V/5V (VDDPAD)	Digital	Input
14	+ SSI SCL	SSI Clock (+)	3.3V/5V (VDDPAD)	Digital	Input
15	– SSI SCL	SSI Clock (–)	3.3V/5V (VDDPAD)	Digital	Input
16					
17	ESL SEL	Protocol Selection	Selection (GND)	Ground	Ground
18	EEPROM SCL	EXT EEPROM Clock	3.3V/5V (VDDPAD)	Digital	I/O
19	EEPROM SDA	EXT EEPROM Data	3.3V/5V (VDDPAD)	Digital	I/O
20	EEPROM WP	EXT EEPROM Write Protect	3.3V/5V (VDDPAD)	Digital	Output
21	–A	Incremental –A Output	3.3V/5V (VDDPAD)	Digital	Output
22	+A/PROBE1	Incremental +A Output	3.3V/5V (VDDPAD)	Digital	Output
23	–B	Incremental –B Output	3.3V/5V (VDDPAD)	Digital	Output
24	+B/PROBE2	Incremental +B Output	3.3V/5V (VDDPAD)	Digital	Output
25	–I	Incremental –Index Output	3.3V/5V (VDDPAD)	Digital	Output
26	+I/PROBE3	Incremental +Index Output	3.3V/5V (VDDPAD)	Digital	Output
27	VSSA	Analog GND	Analog ground	Analog ground	Ground
28	VDDA	Analog Supply Voltage	3.3V/5V (VDDPAD)	Analog	Power
29	–U	Incremental –U Output	3.3V/5V (VDDPAD)	Digital	Output
30	+U/PROBE4	Incremental +U Output	3.3V/5V (VDDPAD)	Digital	Output
31	–V	Incremental –V Output	3.3V/5V (VDDPAD)	Digital	Output
32	+V	Incremental +V Output	3.3V/5V (VDDPAD)	Digital	Output
33	–W	Incremental –W Output	3.3V/5V (VDDPAD)	Digital	Output
34	+W	Incremental +W Output	3.3V/5V (VDDPAD)	Digital	Output
35	Common GND (VSSA)	Ground to VSSA	Analog ground	Analog ground	Ground

ESL Option Pinout Configuration

NOTE: Pin 35 must be grounded to VSSA and pin 17 connect to VDD (5V/3.3V).

Table 2: ESL Pinout

Pin	Name	Function	Pad Type	Analog/Digital	Input/ Output
1	CN/TST3	Analog Voltage Output NCOS	5V/3.3V pads	Analog	I/O
2	CP/TST2	Analog Voltage Output PCOS	5V/3.3V pads	Analog	I/O
3	SN/TST1	Analog Voltage Output NSIN	5V/3.3V pads	Analog	I/O
4	SP/TST0	Analog Voltage Output PSIN	5V/3.3V pads	Analog	I/O
5					
6					
7					
8	VDD	Digital Supply Voltage	3.3V/5V (VDDPAD)	Digital	Power
9	VSS	Digital GND	Digital ground	Digital ground	Ground
10	+ RS485	RS485 Data Output (+)	3.3V/5V (VDDPAD)	Digital	I/O
11	– RS485	RS485 Data Output (–)	3.3V/5V (VDDPAD)	Digital	I/O
12					
13					
14					
15					
16	OSC_EXT	External Oscillator	3.3V pads	Digital	Input
17	ESL SEL	Protocol Selection	Selection (VDD)	Digital	Power
18	EEPROM SCL	EXT EEPROM Clock	3.3V/5V (VDDPAD)	Digital	I/O
19	EEPROM SDA	EXT EEPROM Data	3.3V/5V (VDDPAD)	Digital	I/O
20	EEPROM WP	EXT EEPROM Write Protect	3.3V/5V (VDDPAD)	Digital	Output
21	–A	Incremental –A Output	3.3V/5V (VDDPAD)	Digital	Output
22	+A/PROBE1	Incremental +A Output	3.3V/5V (VDDPAD)	Digital	Output
23	–B	Incremental –B Output	3.3V/5V (VDDPAD)	Digital	Output
24	+B/PROBE2	Incremental +B Output	3.3V/5V (VDDPAD)	Digital	Output
25	–I	Incremental –Index Output	3.3V/5V (VDDPAD)	Digital	Output
26	+I/PROBE3	Incremental +Index Output	3.3V/5V (VDDPAD)	Digital	Output
27	VSSA	Analog GND	Analog ground	Analog ground	Ground
28	VDDA	Analog Supply Voltage	3.3V/5V (VDDPAD)	Analog	Power
29	–U	Incremental –U Output	3.3V/5V (VDDPAD)	Digital	Output
30	+U/PROBE4	Incremental +U Output	3.3V/5V (VDDPAD)	Digital	Output
31	–V	Incremental –V Output	3.3V/5V (VDDPAD)	Digital	Output
32	+V	Incremental +V Output	3.3V/5V (VDDPAD)	Digital	Output
33	–W	Incremental –W Output	3.3V/5V (VDDPAD)	Digital	Output
34	+W	Incremental +W Output	3.3V/5V (VDDPAD)	Digital	Output
35	Common GND (VSSA)	Ground to VSSA	Analog ground	Analog ground	Ground

Communication Protocol

SSI 3-Wire

Figure 8: SSI 3-Wire Timing Diagram

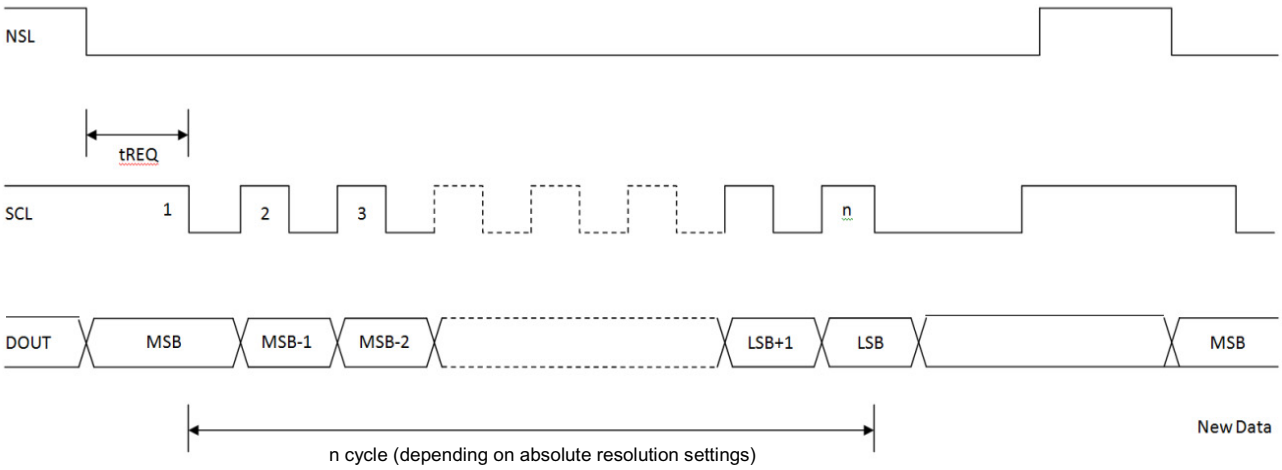

Notes:
NSL toggles from high to low to start request position data.
SCL maximum frequency is 10 MHz.
tREQ = 10 µs is the time of data request processing.

Figure 9: AR18 SSI 3-Wire Format Output

Figure 10: AR35 SSI 3-Wire Format Output

ESL

Figure 11: General Transmission Frames Format on Half Duplex Line

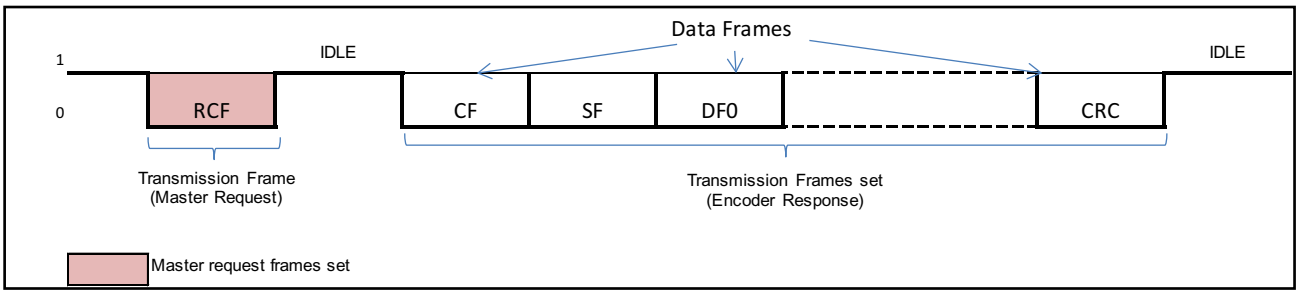

Start of transmission frames set: Upon detected the first logic of Low state 0 on the transmission line after idling state, and if the following 3 bit conforms to command identifier, the encoder will acknowledge as a valid Request Command Frame (RCF), indicating the start of transmission frame set; else, it will continue to search for next available logic of low state 0.

End of transmission frames set: After the Request Command Frame is detected, if there is no Start Bit after the End Bit of the last frame read and no subsequent frame detected, end of transmission frame set is concluded.

Idle state: Idle state means a space between each transmission frames set and subsequent transmission frames. At idling state, logic of output in transmission line is kept to high state 1.

Encoder Data Read Out Frame Sets Format and Timing

Figure 12: Encoder Data Read Out Frames Set

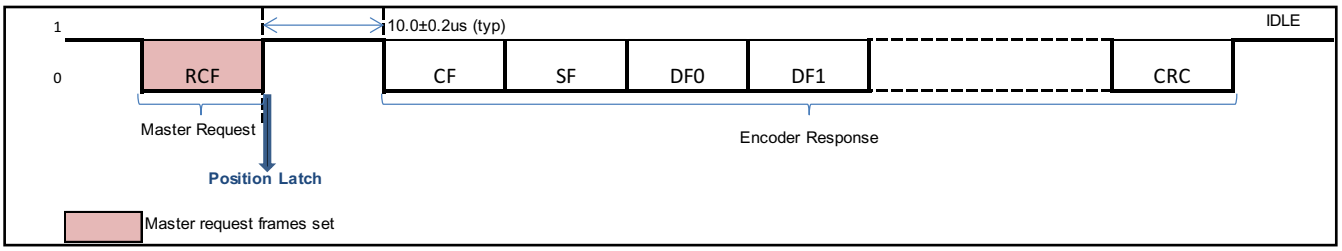

Upon the master issue a RCF frame request, after 10.0 µs (typ.), the encoder will respond with encoder data frames set with the following content:

1. CF: Corresponds to the Request Command Frame (RCF) issued from master.
2. SF: Status Frame.
3. DF0~DF7: Data Frames.
4. CRC: Cyclic Redundancy Check (CRC) Frame.

Encoder position calculation will be completed within 10.0 µs (typ.) after the end bit of Master Request Command Frame (RCF).

The Encoder Response data frames set format are dependent on the requested operation by the master, see Table 3.

Table 3: Data Frames Content with Respective Command ID

Command ID	DF0	DF1	DF2	DF3	DF4	DF5	DF6	DF7
Command ID 4	ALMC[a]	ABS0[b]	ABS1	ABS2	ABS3			
Command ID 6	ABS0	ABS1	ABS2	ABS3				
Command ID 8	ENID[c]							
Command ID A	ALMC							
Command ID B	ALMC	ABS0	ABS1	ABS2	ABS3			
Command ID C	ALMC	ABS0	ABS1	ABS2	ABS3			

a. **ALMC:** Encoder Alarm Flags.

b. **ABSn:** Single-turn counts. LSB of the single-turn counts are located in ABS0, and MSB of the counts data are located in ABS3. Combining ABS0~ABS3 will provide total to 32 bits of single-turn data. For single-turn 25 bits encoder option, the 7 MSB of ABS3 is fixed to 0, hence giving total 25 bits single turn-data.

c. **ENID:** Encoder Single-turn bits identification.

Memory Data Read Out Frames Set Format and Timing

Figure 13: Memory Data Read Out Frames Set

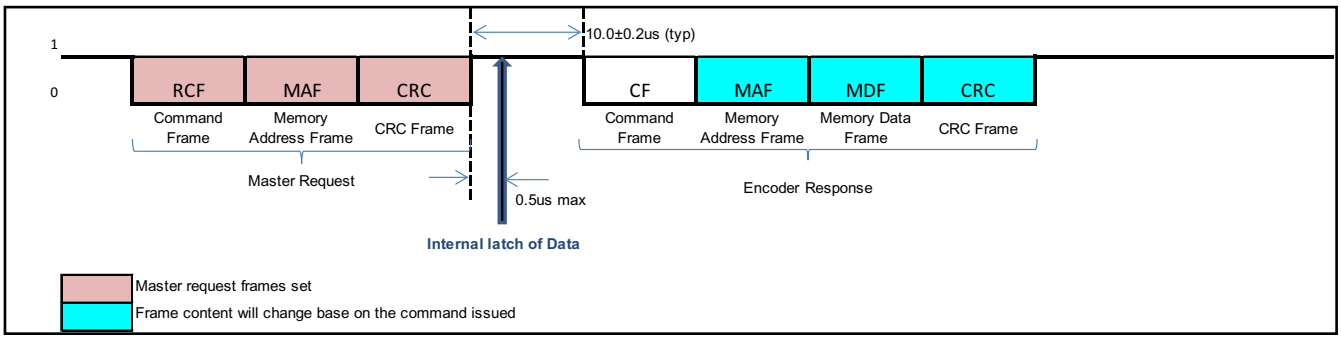

Content of transmission frames:

1. RCF: Request Command Frame from master.
2. CF: Corresponds to the Request Command Frame (RCF) issued from master.
3. MAF: Memory Address Frame indicates the memory location to read.
4. MDF: Memory Data Frame contains the data read from memory.
5. CRC: Cyclic Redundancy Check (CRC) Frame.

Memory Data Write Frames Set Format and Timing

Figure 14: Memory Data Write Frames Set

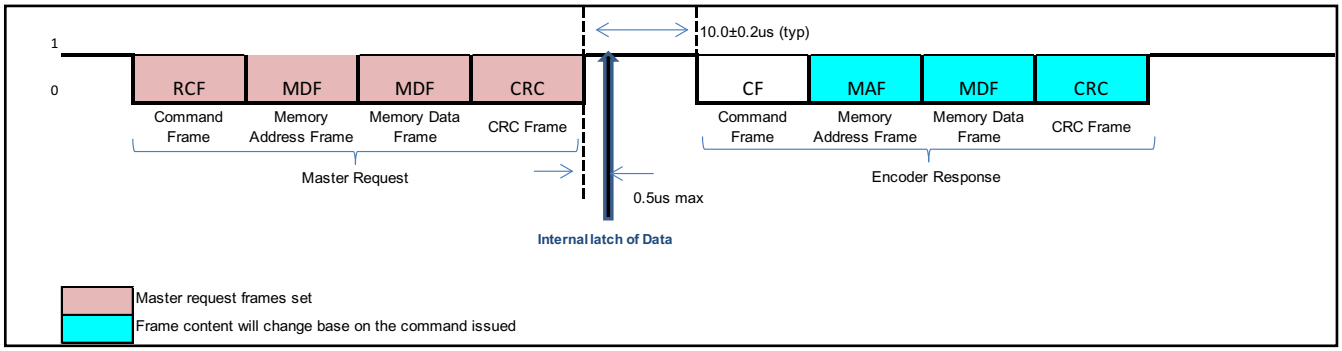

Content of transmission frames:

1. RCF: Request Command Frame from master.
2. CF: Corresponds to the Request Command Frame (RCF) issued from master.
3. MAF: Memory Address Frame indicates the memory location to write.
4. MDF: Memory Data Frame contains the data write from memory.
5. CRC: Cyclic Redundancy Check (CRC) Frame.

Configurations and Signal Output

Customer Configurations

Table 4: Encoder Configuration Settings

Page (Hex)	Address	Bit (s)	Name	Settings	Output	Default (Hex)
0x08	0x00	0-7	Register Unlock	Unlock (Write 0xAB)	Unlock register	8'h00
0x0E	0x09	7	EEPROM Disable	0	Disable EEPROM	8'h00
				1	Enable EEPROM	
		5	CW Direction	0	Count UP (CCW)	
				1	Count UP (CW)	
		3-4	RS485 Baud Rate Setting	0	SSI 3W	
				1	2.5MHz ESL	
				11	10MHz ESL	
		0-2	RS485 Encoder ID	000	Default	
	0x0A	5-7	UVW Setting [2:0]	0	2 pole-pairs	8'hC0
				1	3 pole-pairs	
				10	4 pole-pairs	
				11	5 pole-pairs	
				100	12 pole-pairs	
				101	30 pole-pairs	
				110	32 pole-pairs	
				111	32 pole-pairs	
		3-4	I-width Setting	0	90 edeg	
				1	180 edeg	
				10	360 edeg	
				11	90 edeg	
		0-2	CPR Setting	0	8192	
				1	4096	
				10	2048	
				11	1024	
				100	512	
				101	256	
				110	128	
				111	128	
	0x0B	0-1	Abs Resolution	AR35 Bit: 00	17 Bit	8'h3F
				AR35 Bit: 01	21 Bit	
				AR18 Bit: 00	17 Bit	
				AR18 Bit: 01	19 Bit	
				AR18 Bit: 10	21 Bit	

Customer Reserved Zero Offset and Calibration Registers

Table 5: Customer Zero Offset and Calibration

Page	Address	Bit (s)	Name	Description
0x0E	0x09	0-5	Customer Configuration 1	User Programmable
	0x0A	0-7	Customer Configuration 2	User Programmable
	0x0C	0-7	Zero Reset 0	Zero Reset Position [8:1]
	0x0D	0-7	Zero Reset 1	Zero Reset Position [16:9]
	0x0E	0-7	Zero Reset 2	Zero Reset Position [24:17]
	0x00	0-7	Ext Gain Calibration	Calibration
	0x0B	2-7	Mon Calibration	Calibration
	0x08	2-7	Phase Calibration (Config_Sync)	Calibration
	0x10	0-5	Probe and PMUX	Calibration
	0x19	1 and 5	Calibration and Function ON	Calibration
	0x14	7	Safety Nrst	Alarm Clear

Incremental Output Format

Figure 15: ABI Signals Output (based on codewheel direction settings = 0)

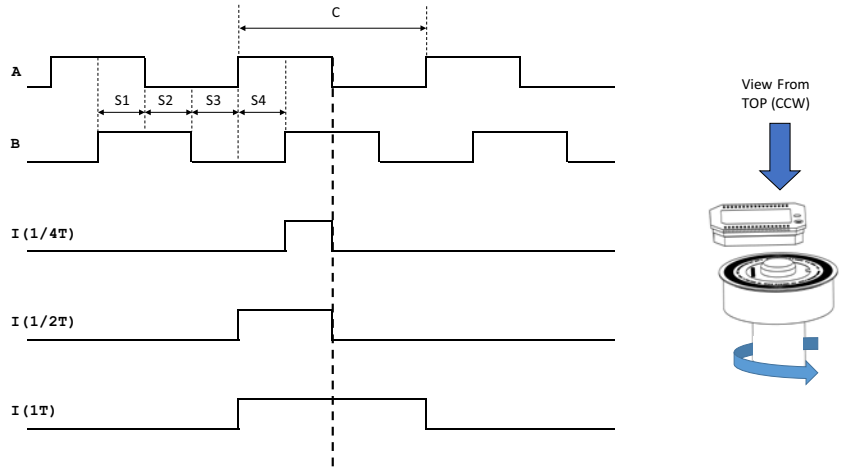

Figure 16: UVW Signals Output (based on codewheel direction settings = 0)

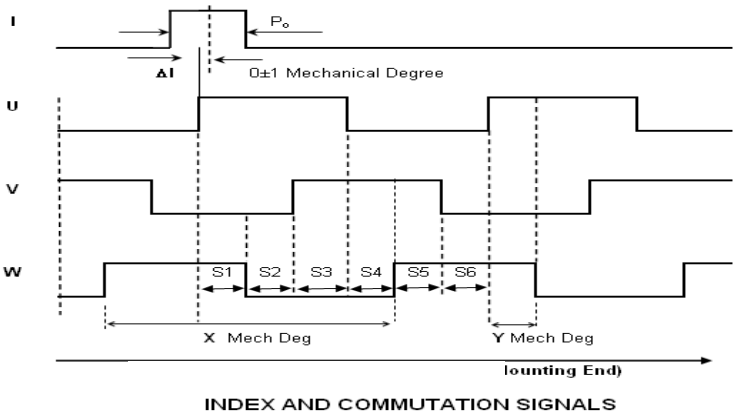

	X	Y
2pp	180	30
3pp	120	20
4pp	90	15
5pp	72	12
12pp	30	5
30pp	12	2
32pp	11.25	1.875

Ordering Information

Encoder Ordering Information

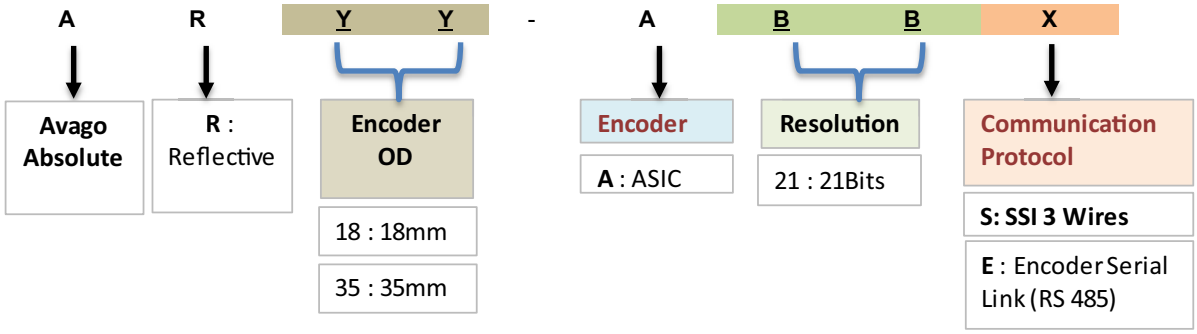

Calibration Kit

- Ordering Part No: A21E-0010
- Description: AR18/35 Electronic Calibration Kits

Packaging

- Encoder Packaging Information (Tray): 60 units per tray
- Codewheel Packaging Information (Tray): 30 units per tray

Broadcom, the pulse logo, Connecting everything, Avago Technologies, Avago, and the A logo are among the trademarks of Broadcom and/or its affiliates in the United States, certain other countries and/or the EU.

Copyright © 2017 by Broadcom. All Rights Reserved.

The term “Broadcom” refers to Broadcom Limited and/or its subsidiaries. For more information, please visit www.broadcom.com.

Broadcom reserves the right to make changes without further notice to any products or data herein to improve reliability, function, or design. Information furnished by Broadcom is believed to be accurate and reliable. However, Broadcom does not assume any liability arising out of the application or use of this information, nor the application or use of any product or circuit described herein, neither does it convey any license under its patent rights nor the rights of others.

Общество с ограниченной ответственностью «МосЧип» ИНН 7719860671 / КПП 771901001
Адрес: 105318, г.Москва, ул.Щербаковская д.3, офис 1107

Данный компонент на территории Российской Федерации

Вы можете приобрести в компании MosChip.

Для оперативного оформления запроса Вам необходимо перейти по данной ссылке:

http://moschip.ru/get-element

Вы можете разместить у нас заказ для любого Вашего проекта, будь то серийное производство или разработка единичного прибора.

В нашем ассортименте представлены ведущие мировые производители активных и пассивных электронных компонентов.

Нашей специализацией является поставка электронной компонентной базы двойного назначения, продукции таких производителей как XILINX, Intel (ex.ALTERA), Vicor, Microchip, Texas Instruments, Analog Devices, Mini-Circuits, Amphenol, Glenair.

Сотрудничество с глобальными дистрибьюторами электронных компонентов, предоставляет возможность заказывать и получать с международных складов практически любой перечень компонентов в оптимальные для Вас сроки.

На всех этапах разработки и производства наши партнеры могут получить квалифицированную поддержку опытных инженеров.

Система менеджмента качества компании отвечает требованиям в соответствии с ГОСТ Р ИСО 9001, ГОСТ РВ 0015-002 и ЭС РД 009

Офис по работе с юридическими лицами:

105318, г.Москва, ул.Щербаковская д.3, офис 1107, 1118, ДЦ «Щербаковский»

Телефон: +7 495 668-12-70 (многоканальный)

Факс: +7 495 668-12-70 (доб.304)

E-mail: info@moschip.ru

Skype отдела продаж:
moschip.ru
moschip.ru_4
moschip.ru_6
moschip.ru_9