# Amphenol® JT/LJT Subminiature Cylindrical Connectors

12-090-18

**Amphenol**

**Table of Contents**


| *Description* | *Page* |
|---|---|
| Amphenol® JT/LJT General Information | 1 |
| JT/LJT - The subminiature cylindrical for every application | 2 |
| JT/LJT - Specifications | 3 |
| JT/LJT - Insert availability and identification; alternate positioning | 4, 5 |
| JT/LJT - Insert availability and identification | 6 |
| JT/LJT - Insert arrangements | 7 – 11 |
| JT - Crimp, JT00R (MS27472) wall mounting receptacle | 12 |
| JT - Crimp, JTPQ00R (MS27497), wall mounting receptacle, back panel mounting | 13 |
| JT - Crimp, JT01R, line receptacle | 14 |
| JT - Crimp, JT02R (MS27499), box mounting receptacle | 15 |
| JT - Crimp, JTP02R (MS27508), box mounting recept., back panel mounting | 16 |
| JT - Crimp, JT06R (MS27473), straight plug | 17 |
| JT - Crimp, JTG06R (MS27484), straight plug with grounding fingers | 18 |
| JT - Crimp, JT07R (MS27474), jam nut receptacle | 19 |
| JT - Crimp, JTL07R, jam nut receptacle, miniature jam nut mounting dimensions | 20 |
| JT - Crimp, JT08R (MS27500), 90° plug | 21 |
| JT - Hermetic, JT00 (MS27475), wall mounting receptacle | 22 |
| JT - Hermetic, JT02 (MS27476), box mounting receptacle | 23 |
| JT - Hermetic, JT07 (MS27477), jam nut receptacle | 24 |
| JT - Hermetic, JTI (MS27478), solder mounting receptacle | 25 |
| JT - Accessories, plug protection cap | 26 |
| JT - Accessories, receptacle protection cap | 27 |
| JT - Accessories, strain relief (crimp type) | 28 |
| LJT - Crimp, LJT00R (MS27466) wall mounting receptacle | 29 |
| LJT - Crimp, LJTPQ00R (MS27656) wall mounting receptacle, back panel mounting | 30 |
| LJT - Crimp, LJT01R line receptacle | 31 |
| LJT - Crimp, LJT02R (MS27496) box mounting receptacle | 32 |
| LJT - Crimp, LJTP02R (MS27505) box mounting receptacle, back panel mounting | 32 |
| LJT - Crimp, LJT06R (MS27467) straight plug | 33 |
| LJT - Crimp, LJT07R (MS27468) jam nut receptacle | 34 |
| LJT - Hermetic, LJT00 (MS27469) wall mounting receptacle | 35 |
| LJT - Hermetic, LJT07 (MS27470) jam nut receptacle | 36 |
| LJT - Hermetic, LJTI (MS27471) solder mounting receptacle | 37 |
| LJT - Accessories, plug protection cap | 38 |
| LJT - Accessories, receptacle protection cap | 39 |
| LJT - Accessories, strain relief (solder type) | 40 |
| JT/LJT - Crimp contacts, printed circuit board, wire wrap contacts (sockets) | 41 |
| LJT - Printed circuit board, wire wrap contacts (sockets) | 42 |
| JT/LJT - Printed circuit board, wire wrap contacts (pins) | 43 |
| JT/LJT - Accessories, Universal “Header Assembly” for flex print or PCB mounting | 44, 45 |
| JT/LJT - Thermocouple contacts, plastic protection caps, sealing plugs | 46 |
| JT/LJT - Application tools | 47 |
| JT/LJT - Solder contact connectors | 48 |
| JT/LJT - How to Order | 49 |
| Specials - JT/LJT Connectors Types - Filter, Aquacon, Breakaway/Quick Disconnect | 50 |
| Specials - JT/LJT Ground Plane Connectors | 51 |
| Sales Office and Distributor Listing | 52 |

| *MS Number* | *Page* |
|---|---|
| MS20047 | 39 |
| MS20048 | 38 |
| MS27352 | 26 |
| MS27353 | 27 |
| MS27466 | 29 |
| MS27467 | 33 |
| MS27468 | 34 |
| MS27469 | 35 |
| MS27470 | 36 |
| MS27471 | 37 |
| MS27472 | 12 |
| MS27473 | 17 |
| MS27474 | 19 |
| MS27475 | 22 |
| MS27476 | 23 |
| MS27477 | 24 |
| MS27478 | 25 |
| MS27479 | 12 |
| MS27482 | 22 |
| MS27483 | 24 |
| MS27484 | 18 |
| MS27488 | 44 |
| MS27496 | 32 |
| MS27497 | 13 |
| MS27499 | 15 |
| MS27500 | 21 |
| MS27501 | 38 |
| MS27502 | 39 |
| MS27503 | 25 |
| MS27505 | 32 |
| MS27506-2 | 28 |
| MS27508 | 16 |
| MS27510 | 26 |
| MS27511 | 27 |
| MS27656 | 30 |


NOTE:

The connector products in this brochure were formerly known as Bendix® products. These products are now manufactured and sold under the Amphenol® brand name. The name “Amphenol” will replace the name “Bendix” on products and literature in the future.

**See Amphenol catalogs on-line at: www.amphenol-aerospace.com**

**Amphenol Aerospace is a Certified ISO 9001 Manufacturer**

# Amphenol® JT/LJT

## high reliability and high contact density with maximum weight and space savings

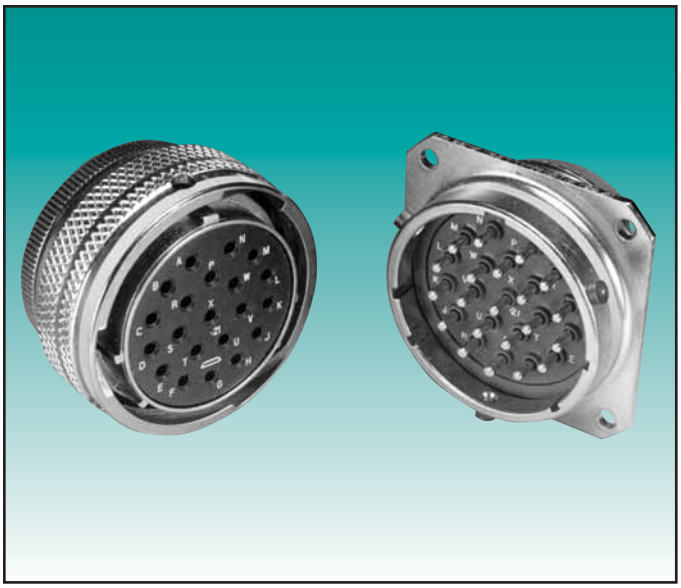

**Amphenol® JT Connector**

**Amphenol® LJT Connector**

For additional information on Amphenol JT/LJT connectors, or for special application requirements, contact your local sales office or:


Amphenol Corporation
Amphenol Aerospace
40 – 60 Delaware Avenue, Sidney, NY 13838-1395
Telephone: 607-563-5011 Fax: 607-563-5157
www.amphenol-aerospace.com


**Amphenol® LJT and JT Series subminiature cylindrical connectors are qualified to MIL-DTL-38999*, Series I and II respectively. These connectors were developed to meet the needs of the aerospace industries, and provided the impetus for development of the MIL-C-38999 specifications, which recently were superseded by MIL-DTL-38999. Meeting or exceeding MIL-DTL-38999 requirements, Amphenol® JT/LJT connectors feature:**

- **Lightweight, Space Saving Design**
- **Contact Protection -** 100% scoop-proof LJT design prevents bent pins and short circuits during mating
- **Quick Positive Coupling** - 3 point bayonet lock system
- **Mismating Eliminated** - with 5 key/keyway design
- **Error Proof Alternate Positioning** - insured by different key/keyway locations
- **EMI Shielding** - grounding fingers standard in LJT Series; optional in JT Series
- **Nine Shell Sizes and a Variety of Shell Styles**
- **Contact Options** - size 8, 10, 12, 16, 20, 22M and 22D Crimp, Solder, PCB, Wire wrap, Coax, Twinax, Triax, Thermocouple, Fiber Optic and Filter
- **Fixed Solder Contacts** - per MIL-C-27599 (see page 52 and Amphenol Product Data Sheet 158)
- **Hermetic** - air leakage limited to 1 X $10^{-7}$ $cm^3$ per second optional
- **"Breakaway" Lanyard Release Style** - available in LJT plugs. Provides quick disconnect of the connector plug and receptacle with axial pull on the lanyard. See pages 38-41.
- **Inventory Support Commonality** - uses standard MIL-DTL-38999 contacts, insert arrangements and application tools.
- **RoHS Compliant Product Available -** Consult Amphenol Aerospace Operations.

Where proof of high reliability and lot control is required, MS approved equivalents to most proprietary JT and LJT connectors are available.

* MIL-DTL-38999 Series I supersedes MIL-C-38999 Series I.
MIL-DTL-38999 Series II supersedes MIL-C-38999 Series II.

# JT/LJT
# the subminiature cylindrical for every application

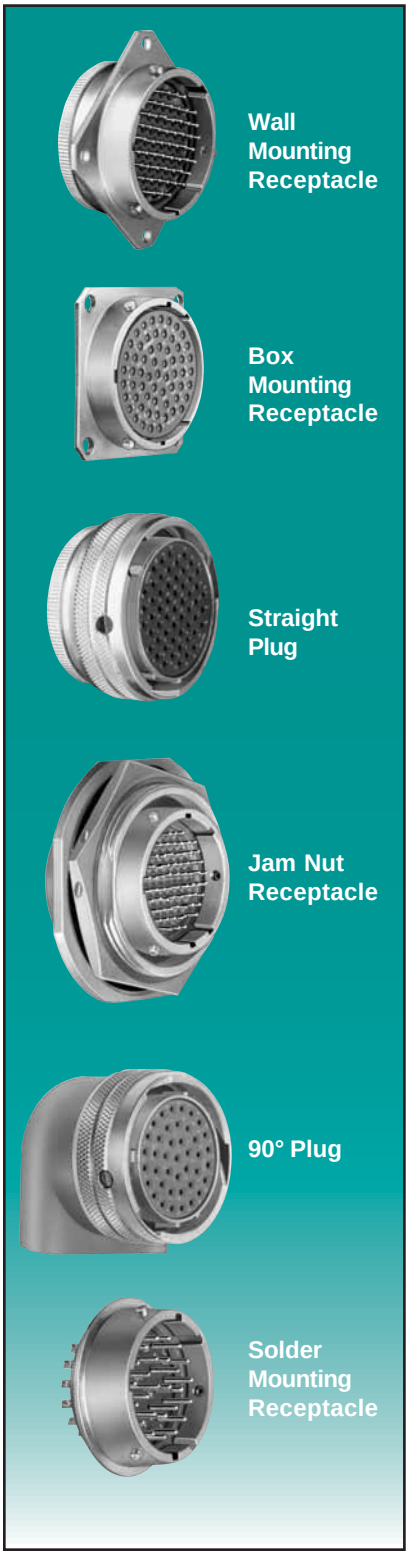

## Components

Shell components are impact extruded or machined bar stock aluminum. Standard plating on shell components is cadmium over nickel. Many finishes are optional (see "Specifications" page 3). Hermetic seal receptacles are available in carbon steel or stainless steel shells. Dependable 5 key/keyway polarization with bayonet lock coupling is incorporated to aid and assure positive mating.

Insert material is a rigid dielectric with excellent electrical characteristics, providing durable protection for molded-in solder type contacts. Contrasting letter or number designations are used on insert faces.

A fluorinated silicone interfacial seal wafer is featured on the mating face of "crimp type pin" inserts. This assures complete electrical isolation of pins when connector halves are mated. In addition, a main joint gasket is installed in the receptacle for moisture sealing between connector halves. Both features are also available for hermetic receptacles.

## Contacts

Maximum design flexibility is built into the JT/LJT Series, with a minimum of 2 to a maximum of 128 circuits per connector in a wide variety of contact arrangements. Contacts are available in sizes 8, 10, 12, 16, 20, 22, 22D and 22M with standard 50 micro inch minimum gold plating (100 micro inches optional). All socket contacts are probe proof. Crimp type rear removable contacts are featured in JT-R and LJT-R connectors. Solder termination contacts are also available, as well as PCB, wire wrap, thermocouple, fiber optic, coaxial, triaxial and twinax contact options.

## Optional Features

High temperature capability of 392°F is available only in JTS or LJTS crimp type connectors. High temperature versions feature gold plated contacts, high temperature shell plating, stainless steel coupling nut spring, and epoxy inserts/fluorinated silicone grommet combination. Standard temperature capability for both solder and crimp is 302°F.

The JTN or LJTN type connectors are available for $N_2O_4$resistance provided they are mated, and ungrommeted rear faces are suitably protected.

For complete listing and definition of connector types, shell styles and service classes, see How to Order, page 53. For information on Fail-Safe Lanyard Release style plugs see pages 38-41.

# JT/LJT specifications

## CONTACT RATING

| Contact Size | Test Current | | Maximum Millivolt Drop Crimp* | Maximum Millivolt Drop | |
|---|---|---|---|---|---|
| | Solder & Crimp | Hermetic | | Solder* | Hermetic* |
| 22M | 3 | 2 | 45 | 20 | 60 |
| | | | | | |
| 22D 5 | 3 | 73 | | 85 | |
| 22 | 5 | 3 | 73 | 20 | 85 |
| 20 | 7.5 | 5 | 55 | 20 | 60 |
| 16 | 13 | 10 | 49 | 20 | 85 |
| 12 | 23 | 17 | 42 | 20 | 85 |
| 10 (Power) | 33 | NA | 33 | NA | NA |

* 10 (Power) tested using silver plated wire.

| Contact Size | Crimp Well Data | | Solder Well Data | |
|---|---|---|---|---|
| | Well Diameter | Nominal Well Depth | Well Diameter | Nominal Well Depth |
| 22M | .028 ±.001 | .141 | .029 +.004 –.000 | |
| 22D | .0345 ±.0010 | .141 | | |
| 22 | .0365 ±.0010 | .141 | .036 +.004 –.000 | .094 |
| 20 | .047 ±.001 | .209 | .044 +.004 –.004 | .125 |
| 16 | .067 ±.001 | .209 | .078 +.000 –.004 | .141 |
| 12 | .100 ±.002 | .209 | .116 +.004 –.002 | .141 |
| 10 (Power) | .137 ±.002 | .355 | NA | NA |

## SERVICE RATING**

| Service Rating | Suggested Operating Voltage (Sea Level) | | Test Voltage (Sea Level) | Test Voltage 50,000 ft | Test Voltage 70,000 ft | Test Voltage 110,000 ft |
|---|---|---|---|---|---|---|
| | AC (RMS) | DC | | | | |
| M | 400 | 500 | 1300 VRMS | 550 VRMS | 350 VRMS | 200 VRMS |
| N | 300 | 450 | 1000 VRMS | 400 VRMS | 260 VRMS | 200 VRMS |
| I | 600 | 850 | 1800 VRMS | 600 VRMS | 400 VRMS | 200 VRMS |
| II | 900 | 1250 | 2300 VRMS | 800 VRMS | 500 VRMS | 200 VRMS |

** Please note that the establishment of electrical safety factors is left entirely in the designer's hands, since he is in the best position to know what peak voltage, switching
surges, transients, etc. can be expected in a particular circuit.

## FINISH DATA

| Aluminum Shell Components Non-Hermetic | | | | |
|---|---|---|---|---|
| Finish | Suffix | | Indicated Finish Standard for JT Types Listed Below | Indicated Finish Standard for LJT Types Listed Below |
| | Military | Proprietary | | |
| Cadmium Plated Nickel Base | MS (A) | – | JT/JTG/JTL/JTP | LJT/LJTP |
| Anodic Coating (Alumilite) | MS (C) | (005) | JTS/JTPS/JTLS | LJTPS/LJTS |
| Chromate Treated (Iridite 14-2) | | (011) | JTN/JTPN/JTLN | LJTN/LJTPN |
| Olive Drab Cadmium Plate Nickel Base | MS (B) | (014) | | |
| Electroless Nickel | MS (F) | (023) | | |

| Hermetic Connectors | | | | |
|---|---|---|---|---|
| Material/Finish | Suffix | | Indicated Finish Standard for JT Types Listed Below | Indicated Finish Standard for LJT Types Listed Below |
| | Military | Proprietary | | |
| Carbon Steel Shell<br>Tin Plated Shell and Contacts | | | JT( )H/JT( )Y<br>JTL( )H/JTL( )Y | LJT( )Y/LJT( )H |
| Carbon Steel Shell<br>Tin Plated Shell and Gold Plated Contacts | MS (D) | | | |
| Stainless Steel Shell<br>Gold Plated Contacts | MS (E) | (162) | JTS( )Y<br>JTLS( )Y | LJTS( )Y |

# JT/LJT
# insert availability and identification, alternate positioning

| JT | LJT | Solder | Crimp | Hermetics Class H | Hermetics Class Y* | Service Rating | Total Contacts | Contact Size 22D | 22M | 22 | 20 | 16 | 12 | 8 (Coax) |
|---|---|---|---|---|---|---|---|---|---|---|---|---|---|---|
| 8-2 | | P | | | | M | 2 | | | | 2 | | | |
| | | | | | | | | | | | | | | |
| 8-3 | | X | N/A | P | P | M | 3 | | | | 3 | | | |
| | 9-3 | X | | | | | | | | | | | | |
| 8-6 | | X | X | P | P | M | 6 | | 6 | | | | | |
| | 9-6 | X | X | P | P | | | | | | | | | |
| | | | | | | M | 7 | | 7 | | | | | |
| | 9-7 | X | | | | | | | | | | | | |
| | | | | | | I | 2 | | | | 2 | | | |
| | 9-22 | X | | | | | | | | | | | | |
| 8-35 | | | X | P | P | M | 6 | 6 | | | | | | |
| | 9-35 | | X | P | P | | | | | | | | | |
| 8-44 | | | X | P | P | M | 4 | | | 4 | | | | |
| | 9-44 | | X | | | | | | | | | | | |
| 8-97 | | X | | | | M | 4 | | 2 | | 2 | | | |
| | | | | | | | | | | | | | | |
| 8-98 | | S | X | P | P | I | 3 | | | | 3 | | | |
| | 9-98 | X | X | P | P | | | | | | | | | |
| | | | | | | I | 2 | | | | | 2 | | |
| | 11-2★ | | X | P** | | | | | | | | | | |
| 10-4 | | | 3 | | | I | 4 | | | | 4 | | | |
| | 11-4 | X | 2 | | | | | | | | | | | |
| 10-5 | | X | X | P | P | I | 5 | | | | 5 | | | |
| | 11-5 | X | X | | | | | | | | | | | |
| | | | | | | I | 6 | | | | 6 | | | |
| | 11-6 | S | | | | | | | | | | | | |
| 10-13 | | X | X | P | P | M | 13 | | 13 | | | | | |
| | 11-13 | X | X | P | P | | | | | | | | | |
| 10-35 | | | X | P | P | M | 13 | 13 | | | | | | |
| | 11-35 | | X | P | P | | | | | | | | | |
| 10-98 | | X | X | P | P | I | 6 | | | | 6 | | | |
| | 11-98 | X | X | P | P | | | | | | | | | |
| 10-99 | | | X | P | P | I | 7 | | | | 7 | | | |
| | 11-99 | | P | | | | | | | | | | | |
| 12-3 | | X | X | P | P | II | 3 | | | | | 3 | | |
| | 13-3 | | P | | | | | | | | | | | |
| 12-4 | | X | X | P | P | I | 4 | | | | | 4 | | |
| | 13-4★ | X | X | P | P | | | | | | | | | |
| 12-8 | | X | X | P | P | I | 8 | | | | 8 | | | |
| | 13-8 | X | X | P | P | | | | | | | | | |
| 12-22 | | | X | P | P | M | 22 | | 22 | | | | | |
| | 13-22 | X | X | P | P | | | | | | | | | |
| 12-35 | | | X | P | P | M | 22 | 22 | | | | | | |
| | 13-35 | | X | P | P | | | | | | | | | |
| 12-98 | | X | X | P | P | I | 10 | | | | 10 | | | |
| | 13-98 | X | X | P | P | | | | | | | | | |
| 14-4 | | | 2 | | | I | 4 | | | | | | 4 | |
| | 15-4 | | 2 | | | | | | | | | | | |
| 14-5 | | X | X | P | P | II | 5 | | | | | 5 | | |
| | 15-5★ | X | X | | | | | | | | | | | |
| 14-15 | | X | X | P | P | I | 15 | | | | 14 | 1 | | |
| | 15-15 | X | X | P | P | | | | | | | | | |
| 14-18 | | X | X | P | P | I | 18 | | | | 18 | | | |
| | 15-18 | X | X | P | P | | | | | | | | | |
| 14-19 | | X | X | | | I | 19 | | | | 19 | | | |
| | 15-19 | | X | | | | | | | | | | | |
| 14-35 | | | X | P | P | M | 37 | 37 | | | | | | |
| | 15-35 | | X | P | P | | | | | | | | | |
| 14-37 | | X | X | P | P | M | 37 | | 37 | | | | | |
| | 15-37 | X | X | P | P | | | | | | | | | |
| 14-68 | | | 2 | | | 1 | 8 | | | | | 8 | | |
| | 15-68 | X | 3 | | | | | | | | | | | |
| 14-97 | | | 2 | P | P | I | 12 | | | | 8 | 4 | | |
| | 15-97 | X | X | P | P | | | | | | | | | |

## JT MASTER KEY/KEYWAY ROTATION

| AB ANGLE OF ROTATION (Degrees) | | | | | |
|---|---|---|---|---|---|
| Shell Size | Normal | A | B | C | D |
| 8 | 100° | 82° | – | – | 118° |
| 10 | 100° | 86° | 72° | 128° | 114° |
| 12 | 100° | 80° | 68° | 132° | 120° |
| 14 | 100° | 79° | 66° | 134° | 121° |
| 16 | 100° | 82° | 70° | 130° | 118° |
| 18 | 100° | 82° | 70° | 130° | 118° |
| 20 | 100° | 82° | 70° | 130° | 118° |
| 22 | 100° | 85° | 74° | 126° | 115° |
| 24 | 100° | 85° | 74° | 126° | 115° |

A plug with a given rotation letter will mate with a receptacle with the same rotation letter. The AB angle for a given connector is the same whether it contains pins or sockets. Only the master key/keyway rotates in the shell, and the insert always remains in the same position relative to the minor keys.

AB angles shown are viewed from the front face of the connector, a receptacle is shown below. The angles for the plug are exactly the same except the direction of rotation is opposite of that shown for the receptacle.

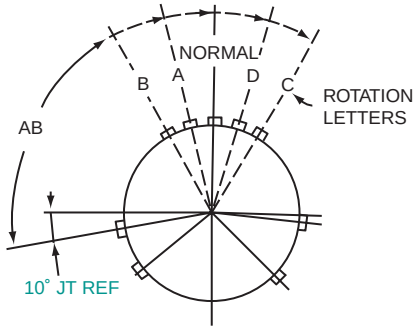


RELATIVE POSSIBLE POSITION OF ROTATED MASTER KEYWAY (front face of receptacle shown)

(P) Pin inserts only (consult Amphenol, Sidney, NY for socket availability)
(2) Not tooled for RP or 02RE
(3) Pin inserts only, not tooled for RP or 02RE (consult Amphenol, Sidney, NY for availability)
* Same as H with interfacial seal
** Tooled with special terminal only (consult Amphenol, Sidney, NY for availability of standard terminal)
★ Ground plane proprietary option available. See page 55 for further information on ground plane connectors.

# JT/LJT
# insert availability and identification, alternate positioning

| JT | LJT | Solder | Crimp | Hermetics Class H | Hermetics Class Y* | Service Rating | Total Con-tacts | Contact Size 22D | 22M | 22 | 20 | 16 | 12 | 8 (Coax) | 8 (Twinax) |
|---|---|---|---|---|---|---|---|---|---|---|---|---|---|---|---|
| | | | | | | M | 39 | 38 | | | | | | | 1 |
| | 17-2 | | X | | | | | | | | | | | | |
| 16-6 | | | X | P | P | I | 6 | | | | | | 6 | | |
| | 17-6 | | X | P | P | | | | | | | | | | |
| 16-8 | | X | X | P | P | II | 8 | | | | | 8 | | | |
| | 17-8★ | X | X | P | P | | | | | | | | | | |
| 16-13 | | | 2 | | | I | 13 | | | | | 13 | | | |
| | 17-13 | | 2 | | | | | | | | | | | | |
| | | | | | | Coax | 4 | | | | | | 2 Coax | 2 | |
| | 17-22 | | | | | | | | | | | | | | |
| | | | | | | M | 24 | 22 | | | | | | 2 | |
| | 17-25 | | 2 | | | | | | | | | | | | |
| 16-26 | | X | X | P | P | I | 26 | | | | 26 | | | | |
| | 17-26 | X | X | P | P | | | | | | | | | | |
| 16-35 | | | X | P | P | M | 55 | 55 | | | | | | | |
| | 17-35 | X | X | P | P | | | | | | | | | | |
| 16-42 | | | X | | | M | 42 | | | 42 | | | | | |
| | 17-42 | | P | | | | | | | | | | | | |
| 16-55 | | X | X | P | P | M | 55 | | 55 | | | | | | |
| | 17-55 | X | X | P | | | | | | | | | | | |
| 16-99 | | X | X | P | P | I | 23 | | | | 21 | 2 | | | |
| | 17-99 | X | X | | | | | | | | | | | | |
| 18-11 | | X | X | P | P | II | 11 | | | | | 11 | | | |
| | 19-11★ | X | X | P | P | | | | | | | | | | |
| | | | | | | M | 18 | 14 | | | | | | | 4 |
| | 19-18 | | 2 | | | | | | | | | | | | |
| 18-28 | | X | X | P | P | I | 28 | | | | 26 | 2 | | | |
| | 19-28 | X | P | | | | | | | | | | | | |
| 18-30 | | X | X | | | I | 30 | | | | 29 | 1 | | | |
| | 19-30 | X | P | | | | | | | | | | | | |
| 18-32 | | X | X | P | P | I | 32 | | | | 32 | | | | |
| | 19-32 | X | X | P | P | | | | | | | | | | |
| 18-35 | | | X | P | P | M | 66 | 66 | | | | | | | |
| | 19-35 | | X | P | P | | | | | | | | | | |
| 18-53 | | X | X | | | M | 53 | | | 53 | | | | | |
| | 19-53 | | P | | | | | | | | | | | | |
| 18-66 | | X | X | P | P | M | 66 | | 66 | | | | | | |
| | 19-66 | | X | P | P | | | | | | | | | | |
| | | | | | | M | 67 | | 67 | | | | | | |
| | 19-67 | X | 3 | | | | | | | | | | | | |
| 18-68 | | | 2 | | | I | 18 | | | | | 18 | | | |
| | 19-68 | | 3 | | | | | | | | | | | | |
| 18-96 | | | 2 | | | I | 9 | | | | | | 9 | | |
| | | | | | | | | | | | | | | | |
| 20-1 | | | X | P | | M | 79 | | 79 | | | | | | |
| | 21-1 | | X | | | | | | | | | | | | |
| 20-2 | | | X | | | M | 65 | | | 65 | | | | | |
| | 21-2 | | 2 | | | | | | | | | | | | |
| 20-11 | | | 3 | | | I | 11 | | | | | | 11 | | |
| | 21-11★ | | 2 | | | | | | | | | | | | |
| 20-16 | | X | X | P | P | II | 16 | | | | | 16 | | | |
| | 21-16★ | X | X | P | P | | | | | | | | | | |
| | | | | | | I | 24 | | | | 24 | | | | |
| | 21-24 | X | | | | | | | | | | | | | |
| | | | | | | I | 25 | | | | 25 | | | | |
| | 21-25 | X | | | | | | | | | | | | | |
| | | | | | | I | 27 | | | | 27 | | | | |
| | 21-27 | X | | | | | | | | | | | | | |
| 20-35 | | | X | | | M | 79 | 79 | | | | | | | |
| | 21-35 | | X | | | | | | | | | | | | |
| 20-39 | | X | X | P | P | I | 39 | | | | 37 | 2 | | | |
| | 21-39 | X | X | | | | | | | | | | | | |
| 20-41 | | X | X | P | P | I | 41 | | | | 41 | | | | |
| | 21-41 | X | X | | | | | | | | | | | | |

## LJT MASTER KEY/KEYWAY ROTATION

| AB ANGLE OF ROTATION (Degrees) | | | | | |
|---|---|---|---|---|---|
| Shell Size | Normal | A | B | C | D |
| 9 | 95° | 77° | – | – | 113° |
| 11 | 95° | 81° | 67° | 123° | 109° |
| 13 | 95° | 75° | 63° | 127° | 115° |
| 15 | 95° | 74° | 61° | 129° | 116° |
| 17 | 95° | 77° | 65° | 125° | 113° |
| 19 | 95° | 77° | 65° | 125° | 113° |
| 21 | 95° | 77° | 65° | 125° | 113° |
| 23 | 95° | 80° | 69° | 121° | 110° |
| 25 | 95° | 80° | 69° | 121° | 110° |

A plug with a given rotation letter will mate with a receptacle with the same rotation letter. The AB angle for a given connector is the same whether it contains pins or sockets. Only the master key/keyway rotates in the shell, and the insert always remains in the same position relative to the minor keys.

AB angles shown are viewed from the front face of the connector, a receptacle is shown below. The angles for the plug are exactly the same except the direction of rotation is opposite of that shown for the receptacle.

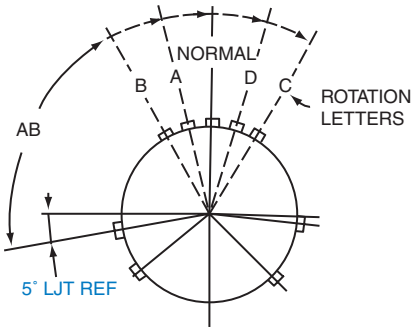


RELATIVE POSSIBLE POSITION OF ROTATED MASTER KEYWAY (front face of receptacle shown)

(P) Pin inserts only (consult Amphenol, Sidney, NY for socket availability)
(2) Not tooled for RP or 02RE
(3) Pin inserts only, not tooled for RP or 02RE (consult Amphenol, Sidney, NY for availability)
* Same as H with interfacial seal
★ Ground plane proprietary option available. See page 55 for further information on ground plane connectors.

# JT/LJT
# insert availability and identification

| JT | LJT | Solder | Crimp | Hermetics Class H | Hermetics Class Y* | Service Rating | Total Con-tacts | Contact Size 22D | 22M | 22 | 20 | 16 | 12 | 8 (Coax) | 8†† (Twinax) | 10 (Power) | 12 Coax |
|---|---|---|---|---|---|---|---|---|---|---|---|---|---|---|---|---|---|
| | 21-75★ | | 2 | | | N | 4 | | | | | | | (See Note 4) | | | |
| | 21-79 | | 2 | | | II | 19 | 17 | | | | | | (See Note 5) | | | |
| 22-1 | 23-1 | | X X | | | M | 100 | | 100 | | | | | | | | |
| 22-2 | 23-2 | X X | X X | P P | P P | M | 85 | | | 85 | | | | | | | |
| | 23-6★ | | P | | | M | 6 | | | | | | | | 6 | | |
| 22-14 | 23-14 | | 2 2 | | | I | 14 | | | | | | 14 | | | | |
| 22-21 | 23-21★ | X X | X X | P P | P P | II | 21 | | | | | 21 | | | | | |
| 22-32 | 23-32 | X X | X P | P | | I | 32 | | | | 32 | | | | | | |
| | 23-34 | X | | | | I | 34 | | | | 34 | | | | | | |
| 22-35 | 23-35 | | X X | | | M | 100 | 100 | | | | | | | | | |
| 22-53 | 23-53 | X | P X | P | | I | 53 | | | | 53 | | | | | | |
| 22-55 | 23-55 | X | X 3 | P | P | I | 55 | | | | 55 | | | | | | |
| | 23-97 | X | | | | II | 16 | | | | | 16 | | | | | |
| | 23-99 | X | | | | II | 11 | | | | | 11 | | | | | |
| 24-1 | 25-1 | | X X | | | M | 128 | | 128 | | | | | | | | |
| 24-2 | 25-2 | | X X | | | M | 100 | | | 100 | | | | | | | |
| 24-4 | 25-4 | | X X | P | P | I | 56 | | | | 48 | 8 | | | | | |
| | 25-7 | | 2 | | | M | 99 | 97 | | | | | | | 2 | | |
| | 25-11 | | 2 | | | N | 11 | | | | 2 | | | | | 9 | |
| 24-19 | 25-19★ | | 2 2 | | | I | 19 | | | | | | 19 | | | | |
| | 25-20 | | 2 | | | N | 30 | | | | 10 | 13 | | | 3 | | 4 |
| 24-24 | 25-24★ | | X X | P | P | I | 24 | | | | | 12 | 12 | | | | |
| 24-29 | 25-29★ | X | X X | | | I | 29 | | | | | 29 | | | | | |
| 24-35 | 25-35 | | X X | | | M | 128 | 128 | | | | | | | | | |
| 24-37 | 25-37★ | | 2 2 | | | I | 37 | | | | | 37 | | | | | |
| 24-43 | 25-43 | X | 3 2 | P | P | I | 43 | | | | 23 | 20 | | | | | |
| | 25-46 | | 2 | | | I | 46 | | | | 40 | 4 | | 2† | | | |
| 24-61 | 25-61 | X X | X X | P P | P P | I | 61 | | | | 61 | | | | | | |

(P) Pin inserts only (consult Amphenol, Sidney, NY for socket availability)
(2) Not tooled for RP or 02RE
(3) Pin inserts only, not tooled for RP or 02RE (consult Amphenol, Sidney, NY for availability)
* Same as H with interfacial seal
** Two size 16 contacts dedicated to fiber optics. Consult Amphenol, Sidney, NY or catalog section 12-352 for fiber optic contact information.

† For RG180/U and RG195/U cables only (consult Amphenol, Sidney, NY for other cable applications)
†† Size 8 Coax and Twinax are interchangeable
(4) MS connector 21-75 is supplied with four size 8 twinax contacts. Proprietary connector 21-75 is supplied with four size 8 coax contacts.
(5) MS connector 21-79 has provision for two size 8 coax contacts. Coax contacts are not supplied unless specified by customer.
★ Ground plane proprietary option available. See page 55 for further information on ground plane connectors.

# JT/LJT
# insert arrangements

black arrangements – JT or LJT
green arrangements – JT only
blue arrangements – LJT only

**front face of pin inserts illustrated**

| | | | | | | | | | |
|---|---|---|---|---|---|---|---|---|---|
| **Insert Arrangement (JT)** | 8-2 | 8-3 | 8-6 | | | 8-35 | 8-44 | 8-97 | 8-98 |
| **Insert Arrangement (LJT)** | | 9-3 | 9-6 | 9-7 | 9-22 | 9-35 | 9-44 | | 9-98 |
| **Service Rating** | M | M | M | M | I | M | M | M | I |
| **Number of Contacts** | 2 | 3 | 6 | 7 | 2 | 6 | 4 | 2 2 | 3 |
| **Contact Size** | 20 | 20 | 22M | 22M | 20 | 22D | 22 | 22M 20 | 20 |

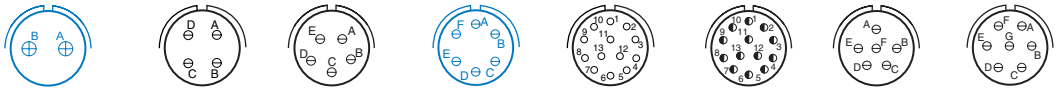

| | | | | | | | | |
|---|---|---|---|---|---|---|---|---|
| **Insert Arrangement (JT)** | | 10-4 | 10-5 | | 10-13 | 10-35 | 10-98 | 10-99 |
| **Insert Arrangement (LJT)** | 11-2 | 11-4 | 11-5 | 11-6 | 11-13 | 11-35 | 11-98 | 11-99 |
| **Service Rating** | I | I | I | I | M | M | I | I |
| **Number of Contacts** | 2 | 4 | 5 | 6 | 13 | 13 | 6 | 7 |
| **Contact Size** | 16 | 20 | 20 | 20 | 22M | 22D | 20 | 20 |

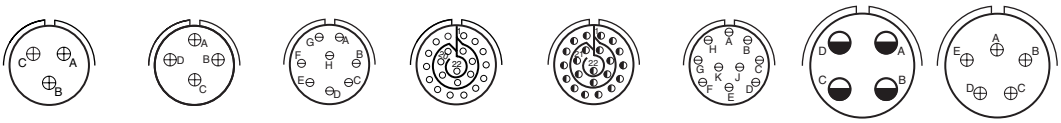

| | | | | | | | | |
|---|---|---|---|---|---|---|---|---|
| **Insert Arrangement (JT)** | 12-3 | 12-4 | 12-8 | 12-22 | 12-35 | 12-98 | 14-4 | 14-5 |
| **Insert Arrangement (LJT)** | 13-3 | 13-4 | 13-8 | 13-22 | 13-35 | 13-98 | 15-4 | 15-5 |
| **Service Rating** | II | I | I | M | M | I | I | II |
| **Number of Contacts** | 3 | 4 | 8 | 22 | 22 | 10 | 4 | 5 |
| **Contact Size** | 16 | 16 | 20 | 22M | 22D | 20 | 12 | 16 |

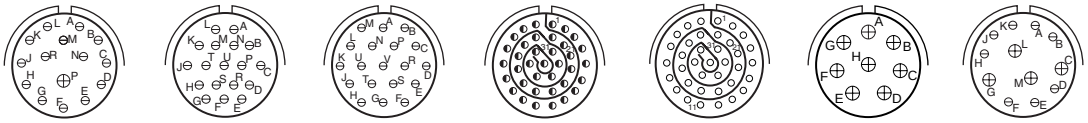

| | | | | | | | |
|---|---|---|---|---|---|---|---|
| **Insert Arrangement (JT)** | 14-15 | 14-18 | 14-19 | 14-35 | 14-37 | 14-68 | 14-97 |
| **Insert Arrangement (LJT)** | 15-15 | 15-18 | 15-19 | 15-35 | 15-37 | 15-68 | 15-97 |
| **Service Rating** | I | I | I | M | M | I | I |
| **Number of Contacts** | 14 1 | 18 | 19 | 37 | 37 | 8 | 8 4 |
| **Contact Size** | 20 16 | 20 | 20 | 22D | 22M | 16 | 20 16 |

**CONTACT LEGEND** 8 10 12 16 20 22 22M 22D

# JT/LJT
# insert arrangements

black arrangements – JT or LJT
green arrangements – JT only
blue arrangements – LJT only

**front face of pin inserts illustrated**

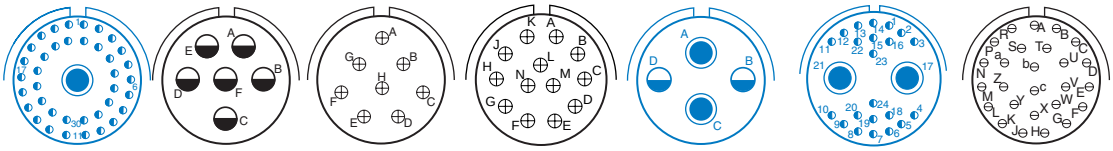

| | | | | | | | |
|---|---|---|---|---|---|---|---|
| Insert Arrangement (JT) | | 16-6 | 16-8 | 16-13 | | | 16-26 |
| Insert Arrangement (LJT) | 17-2 | 17-6 | 17-8 | 17-13 | 17-22 | 17-25 | 17-26 |
| Service Rating | M | I | II | I | Coax | M | I |
| Number of Contacts | 38 1 | 6 | 8 | 13 | 2 2 | 22 2 | 26 |
| Contact Size | 22D 8 Twinax | 12 | 16 | 16 | 12 Coax 8 Coax | 22D 8 Coax | 20 |

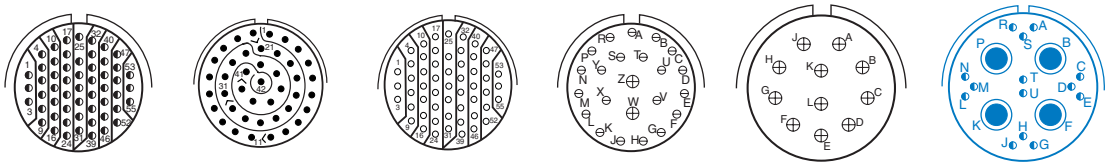

| | | | | | | |
|---|---|---|---|---|---|---|
| Insert Arrangement (JT) | 16-35 | 16-42 | 16-55 | 16-99 | 18-11 | |
| Insert Arrangement (LJT) | 17-35 | 17-42 | 17-55 | 17-99 | 19-11 | 19-18 |
| Service Rating | M | M | M | I | II | M |
| Number of Contacts | 55 | 42 | 55 | 21 2 | 11 | 14 4 |
| Contact Size | 22D | 22 | 22M | 20 16 | 16 | 22D 8 Twinax |

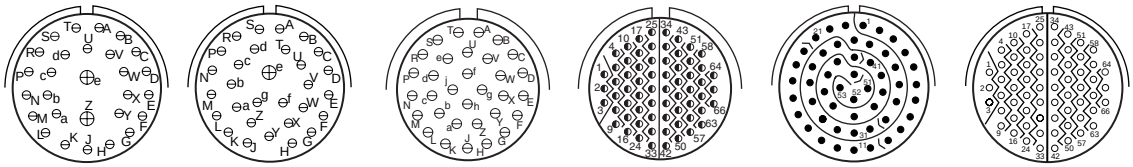

| | | | | | | |
|---|---|---|---|---|---|---|
| Insert Arrangement (JT) | 18-28 | 18-30 | 18-32 | 18-35 | 18-53 | 18-66 |
| Insert Arrangement (LJT) | 19-28 | 19-30 | 19-32 | 19-35 | 19-53 | 19-66 |
| Service Rating | I | I | I | M | M | M |
| Number of Contacts | 26 2 | 29 1 | 32 | 66 | 53 | 66 |
| Contact Size | 20 16 | 20 16 | 20 | 22D | 22 | 22M |

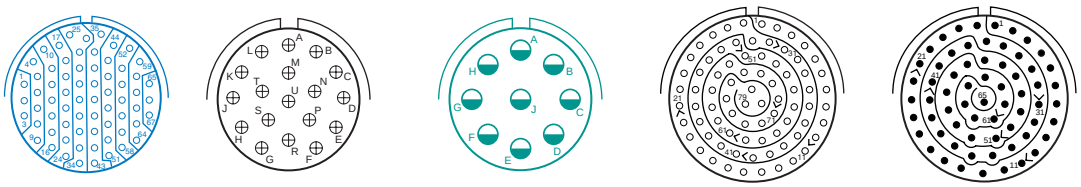

| | | | | | |
|---|---|---|---|---|---|
| Insert Arrangement (JT) | | 18-68 | 18-96 | 20-1 | 20-2 |
| Insert Arrangement (LJT) | 19-67 | 19-68 | | 21-1 | 21-2 |
| Service Rating | M | I | I | M | M |
| Number of Contacts | 67 | 18 | 9 | 79 | 65 |
| Contact Size | 22M | 16 | 12 | 22M | 22 |

CONTACT LEGEND 8 10 12 16 20 22 22M 22D

# JT/LJT
# insert arrangements

black arrangements – JT or LJT
green arrangements – JT only
blue arrangements – LJT only

**front face of pin inserts illustrated**

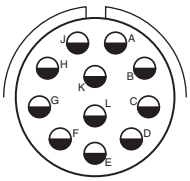
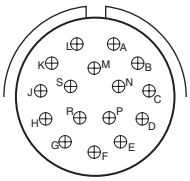
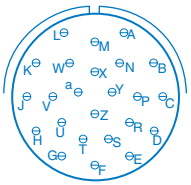
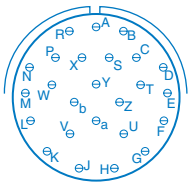
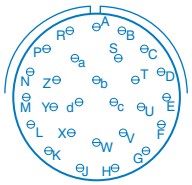

| | | | | | |
|---|---|---|---|---|---|
| **Insert Arrangement (JT)** | **20-11** | **20-16** | | | |
| **Insert Arrangement (LJT)** | **21-11** | **21-16** | **21-24** | **21-25** | **21-27** |
| **Service Rating** | **I** | **II** | **I** | **I** | **I** |
| **Number of Contacts** | **11** | **16** | **24** | **25** | **27** |
| **Contact Size** | **12** | **16** | **20** | **20** | **20** |

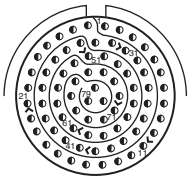
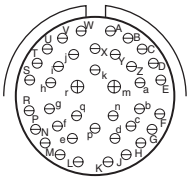
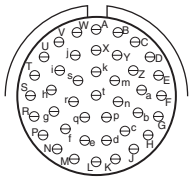
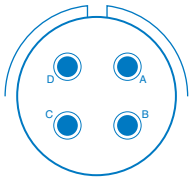
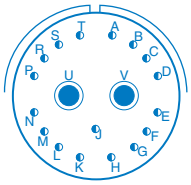

| | | | | | |
|---|---|---|---|---|---|
| **Insert Arrangement (JT)** | **20-35** | **20-39** | **20-41** | | |
| **Insert Arrangement (LJT)** | **21-35** | **21-39** | **21-41** | **21-75** | **21-79** |
| **Service Rating** | **M** | **I** | **I** | **N** | **II** |
| **Number of Contacts** | **79** | **37 2** | **41** | **4** | **17** |
| **Contact Size** | **22D** | **20 16** | **20** | **(See Note)** | **22D (See Note)** |

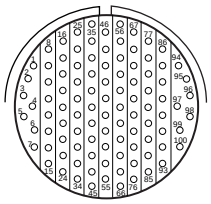
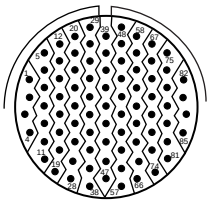
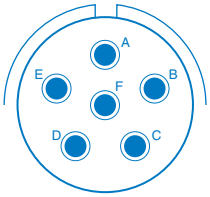
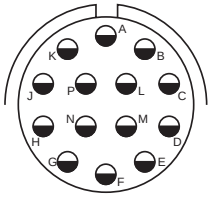

| | | | | |
|---|---|---|---|---|
| **Insert Arrangement (JT)** | **22-1** | **22-2** | | **22-14** |
| **Insert Arrangement (LJT)** | **23-1** | **23-2** | **23-6** | **23-14** |
| **Service Rating** | **M** | **M** | **M** | **I** |
| **Number of Contacts** | **100** | **85** | **6** | **14** |
| **Contact Size** | **22M** | **22** | **8 Twinax** | **12** |

Note: MS connector 21-75 is supplied with four size 8 twinax contacts.
Proprietary connector 21-75 is supplied with four size 8 coax contacts.

MS connector 21-79 has provision for two size 8 coax contacts.
Coax contacts are not supplied unless specified by customer.

**CONTACT LEGEND** 8 10 12 16 20 22 22M 22D

# JT/LJT
# insert arrangements

black arrangements – JT or LJT
green arrangements – JT only
blue arrangements – LJT only

**front face of pin inserts illustrated**

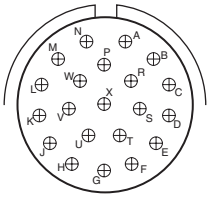
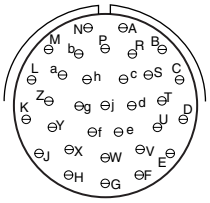
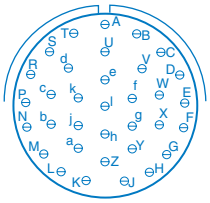
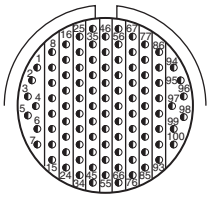

| | | | | |
|---|---|---|---|---|
| **Insert Arrangement (JT)** | **22-21** | **22-32** | | **22-35** |
| **Insert Arrangement (LJT)** | **23-21** | **23-32** | **23-34** | **23-35** |
| **Service Rating** | **II** | **I** | **I** | **M** |
| **Number of Contacts** | **21** | **32** | **34** | **100** |
| **Contact Size** | **16** | **20** | **20** | **22D** |

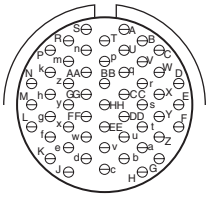
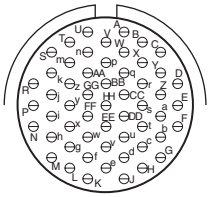
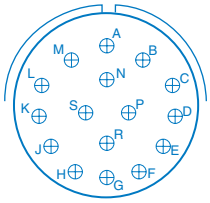
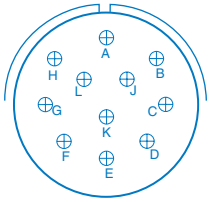

| | | | | |
|---|---|---|---|---|
| **Insert Arrangement (JT)** | **22-53** | **22-55** | | |
| **Insert Arrangement (LJT)** | **23-53** | **23-55** | **23-97** | **23-99** |
| **Service Rating** | **I** | **I** | **II** | **II** |
| **Number of Contacts** | **53** | **55** | **16** | **11** |
| **Contact Size** | **20** | **20** | **16** | **16** |

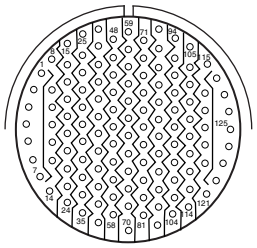
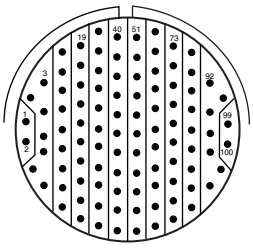
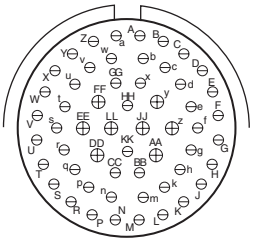

| | | | |
|---|---|---|---|
| **Insert Arrangement (JT)** | **24-1** | **24-2** | **24-4** |
| **Insert Arrangement (LJT)** | **25-1** | **25-2** | **25-4** |
| **Service Rating** | **M** | **M** | **I** |
| **Number of Contacts** | **128** | **100** | **48 8** |
| **Contact Size** | **22M** | **22** | **20 16** |

**CONTACT LEGEND** 8 10 12 16 20 22 22M 22D

# JT/LJT
# insert arrangements

black arrangements – JT or LJT
green arrangements – JT only
blue arrangements – LJT only

**front face of pin inserts illustrated**

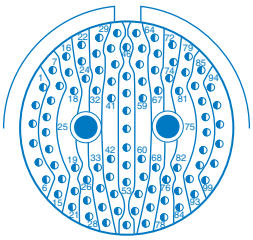
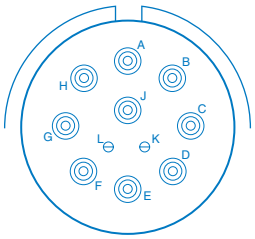
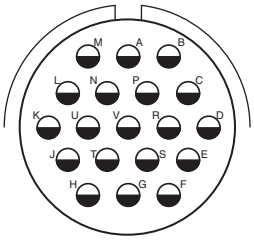
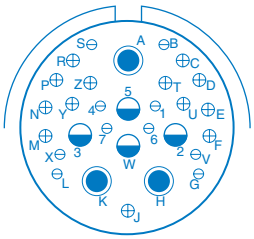

| | | | | |
|---|---|---|---|---|
| **Insert Arrangement (JT)** | | | **24-19** | |
| **Insert Arrangement (LJT)** | **25-7** | **25-11** | **25-19** | **25-20** |
| **Service Rating** | **M** | **N** | **I** | **N** |
| **Number of Contacts** | **97 2** | **2 9** | **19** | **10 13 3 4** |
| **Contact Size** | **22D 8 Twinax** | **20 10** | **12** | **20 16 8 Twinax 12 Coax** |
| | | | | **(Locations U and Y - Dedicated to Fiber Optics)** |

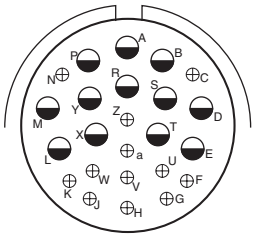
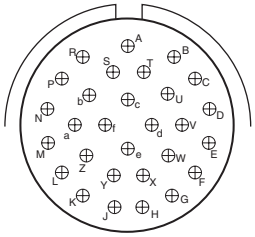
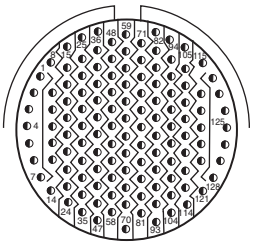
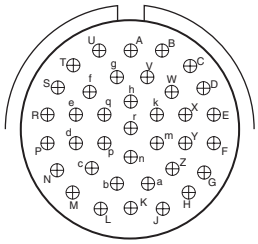

| | | | | |
|---|---|---|---|---|
| **Insert Arrangement (JT)** | **24-24** | **24-29** | **24-35** | **24-37** |
| **Insert Arrangement (LJT)** | **25-24** | **25-29** | **25-35** | **25-37** |
| **Service Rating** | **I** | **I** | **M** | **I** |
| **Number of Contacts** | **12 12** | **29** | **128** | **37** |
| **Contact Size** | **16 12** | **16** | **22D** | **16** |

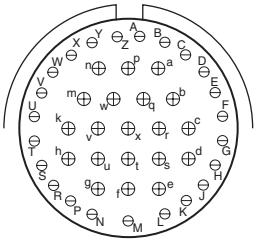
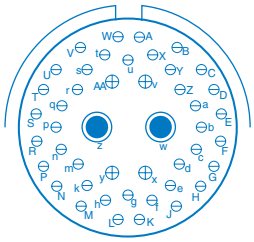
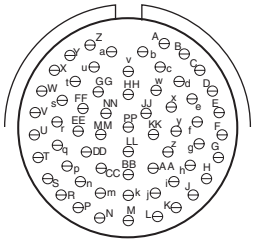

| | | | |
|---|---|---|---|
| **Insert Arrangement (JT)** | **24-43** | | **24-61** |
| **Insert Arrangement (LJT)** | **25-43** | **25-46** | **25-61** |
| **Service Rating** | **I** | **I** | **I** |
| **Number of Contacts** | **23 20** | **40 4 2** | **61** |
| **Contact Size** | **20 16** | **20 16 8 Coax†** | **20** |

† Coax contacts for RG180 or RG195 cable.

**CONTACT LEGEND** 8 10 12 16 20 22 22M 22D

# JT00R (MS27472) — crimp
## wall mounting receptacle

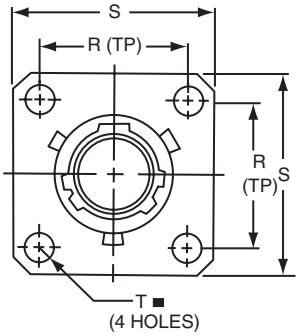


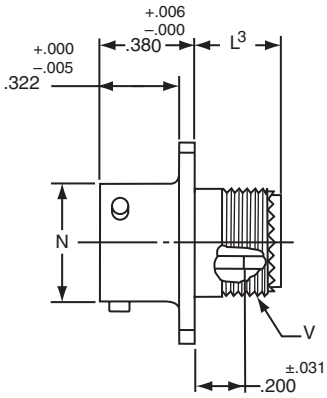


* JT00RT-XX-XXX(MS27472T)
** JTS00RT-XX-XXX(MS27479T)
*** JTN00RT-XX-XXX

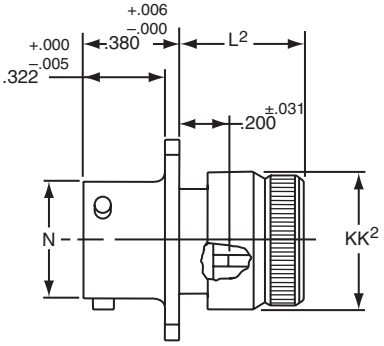


* JT00RE-XX-XXX (MS27472E)
** JTS00RE-XX-XXX(MS27479E)
*** JTN00RE-XX-XXX

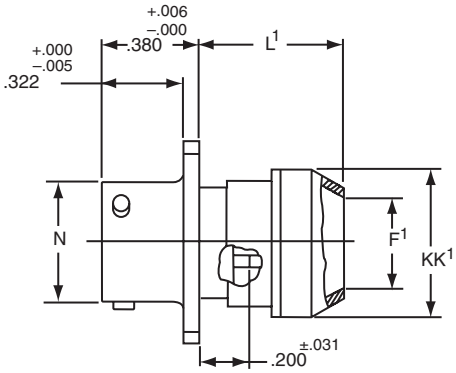


* JT00RP-XX-XXX(MS27472P)
** JTS00RP-XX-XXX
*** JTN00RP-XX-XXX

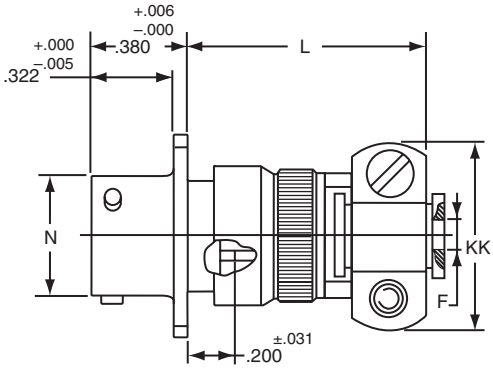


* JT00RE-XX-XXX (SR)
** JTS00RE-XX-XXX (SR)
*** JTN00RE-XX-XXX (SR)

■ ⊕ .005 DIA Ⓜ

* To complete order number see page 53.
** High temperature version; to complete order number see page 53.
*** Clear iridite finish (gold color), $N_2O_4$ resistant; to complete order number see page 53.

| Shell Size | F Dia. +.010 –.025 | F[1] Dia. ±.010 | L Max. | L[1] Max. | L[2] Max. | L[3] Max. | N +.001 –.005 | R (TP) | S ±.016 | T ±.005 | V Thread UNEF Class 2A (Plated) | KK Max. | KK[1] Dia. Max. | KK[2] Dia. Max. |
|---|---|---|---|---|---|---|---|---|---|---|---|---|---|---|
| 8 | .125 | .444 | 1.094 | .609 | .547 | .500 | .473 | .594 | .812 | .120 | .4375-28 | .812 | .625 | .578 |
| 10 | .188 | .558 | 1.094 | .609 | .547 | .500 | .590 | .719 | .938 | .120 | .5625-24 | .875 | .750 | .703 |
| 12 | .312 | .683 | 1.094 | .609 | .547 | .500 | .750 | .812 | 1.031 | .120 | .6875-24 | 1.000 | .875 | .828 |
| 14 | .375 | .808 | 1.344 | .609 | .547 | .500 | .875 | .906 | 1.125 | .120 | .8125-20 | 1.125 | 1.000 | .953 |
| 16 | .500 | .909 | 1.344 | .609 | .547 | .500 | 1.000 | .969 | 1.219 | .120 | .9375-20 | 1.188 | 1.125 | 1.078 |
| 18 | .625 | 1.034 | 1.344 | .609 | .547 | .500 | 1.125 | 1.062 | 1.312 | .120 | 1.0625-18 | 1.438 | 1.250 | 1.203 |
| 20 | .625 | 1.159 | 1.344 | .609 | .547 | .500 | 1.250 | 1.156 | 1.438 | .120 | 1.1875-18 | 1.438 | 1.375 | 1.328 |
| 22 | .750 | 1.284 | 1.469 | .609 | .547 | .500 | 1.375 | 1.250 | 1.562 | .120 | 1.3125-18 | 1.625 | 1.500 | 1.453 |
| 24 | .800 | 1.409 | 1.469 | .688 | .547 | .500 | 1.500 | 1.375 | 1.688 | .147 | 1.4375-18 | 1.719 | 1.625 | 1.578 |

All dimensions for reference only.

# JTPQ00R (MS27497) — crimp
## wall mounting receptacle (back panel mounting)

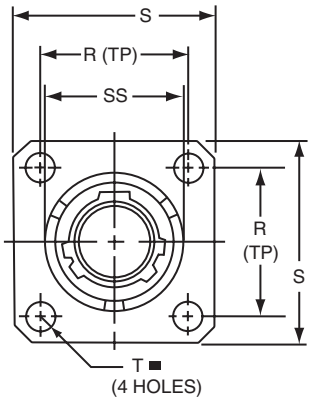


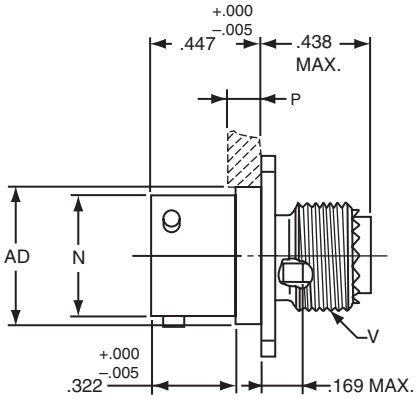


* JTPQ00RT-XX-XXX(MS27497T)
** JTPSQ00RT-XX-XXX

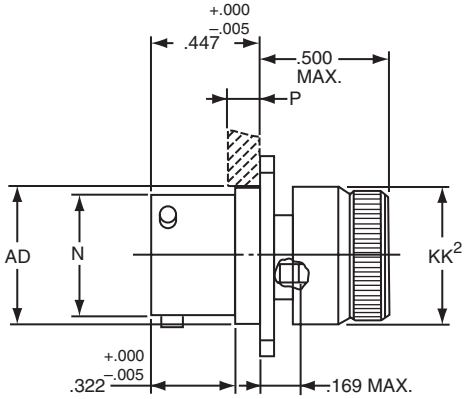


* JTPQ00RE-XX-XXX (MS27497E)

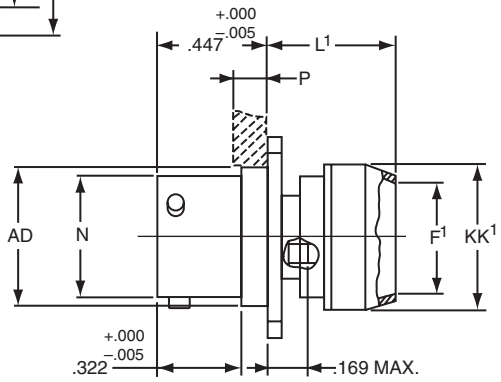


* JTPQ00RP-XX-XXX(MS27497P)

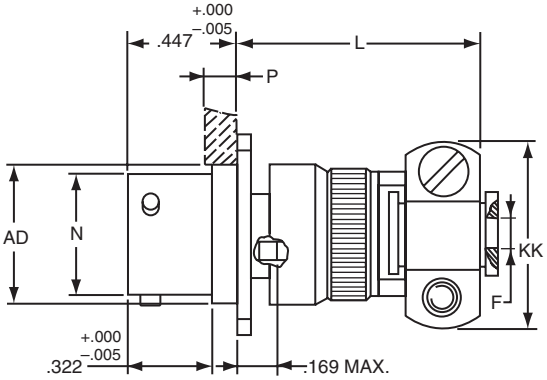


*JTPQ00RE-XX-XXX (SR)

■ ⊕ .005 DIA Ⓜ

* To complete order number see page 53.
** High temperature version; to complete order number see page 53.

| Shell Size | F Dia. +.010 –.025 | F[1] Dia. ±.010 | L Max. | L[1] Max. | N Dia. +.001 –.005 | P Max. Panel Thickness | R (TP) | S ±.016 | T Dia. ±.005 | V Thread UNEF Class 2A (Plated) | AD Dia. ±.005 | KK Max. | KK[1] Dia. Max. | KK[2] Dia. Max. | SS Dia. +.000 –.016 |
|---|---|---|---|---|---|---|---|---|---|---|---|---|---|---|---|
| 8 | .125 | .444 | 1.140 | .468 | .473 | .142 | .594 | .812 | .120 | .4375-28 | .516 | .781 | .625 | .578 | .563 |
| 10 | .188 | .558 | 1.140 | .468 | .590 | .142 | .719 | .938 | .120 | .5625-24 | .633 | .844 | .750 | .703 | .680 |
| 12 | .312 | .683 | 1.140 | .468 | .750 | .142 | .812 | 1.031 | .120 | .6875-24 | .802 | .969 | .875 | .828 | .859 |
| 14 | .375 | .808 | 1.375 | .468 | .875 | .142 | .906 | 1.125 | .120 | .8125-20 | .927 | 1.094 | 1.000 | .953 | .984 |
| 16 | .500 | .909 | 1.375 | .468 | 1.000 | .142 | .969 | 1.219 | .120 | .9375-20 | 1.052 | 1.154 | 1.125 | 1.078 | 1.108 |
| 18 | .625 | 1.034 | 1.375 | .468 | 1.125 | .142 | 1.062 | 1.312 | .120 | 1.0625-18 | 1.177 | 1.406 | 1.250 | 1.203 | 1.233 |
| 20 | .625 | 1.159 | 1.375 | .468 | 1.250 | .142 | 1.156 | 1.438 | .120 | 1.1875-18 | 1.302 | 1.406 | 1.375 | 1.328 | 1.358 |
| 22 | .750 | 1.284 | 1.516 | .468 | 1.375 | .142 | 1.250 | 1.562 | .120 | 1.3125-18 | 1.427 | 1.594 | 1.500 | 1.453 | 1.483 |
| 24 | .800 | 1.409 | 1.500 | .540 | 1.500 | .142 | 1.375 | 1.688 | .147 | 1.4375-18 | 1.552 | 1.688 | 1.625 | 1.578 | 1.610 |

All dimensions for reference only.

# JT01R — crimp
## line receptacle

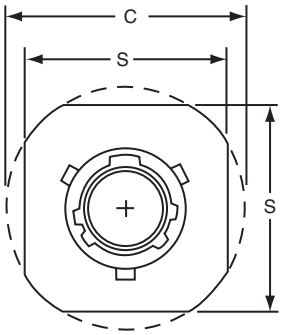


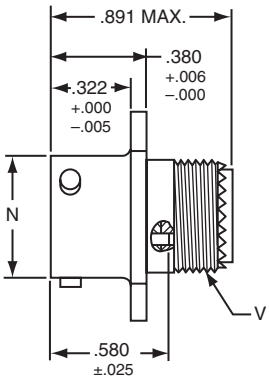


* JT01RT-XX-XXX
** JTS01RT-XX-XXX
*** JTN01RT-XX-XXX

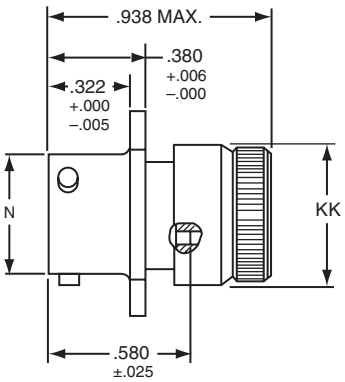


* JT01RE-XX-XXX
** JTS01RE-XX-XXX
*** JTN01RE-XX-XXX

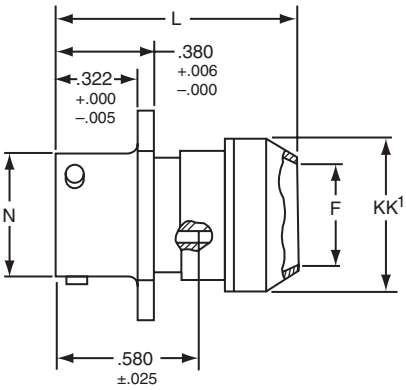


* JT01RP-XX-XXX
** JTS01RP-XX-XXX
*** JTN01RP-XX-XXX

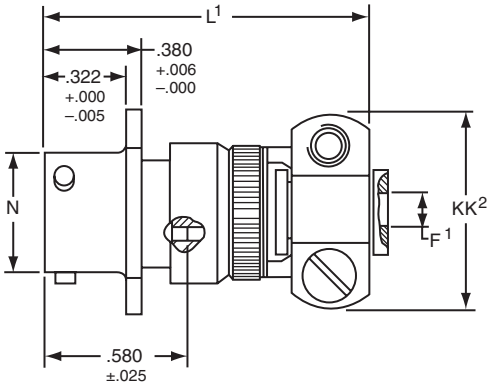


* JT01RE-XX-XXX (SR)
** JTS01RE-XX-XXX (SR)
*** JTN01RE-XX-XXX (SR)

* To complete order number see page 53.
** High temperature version; to complete order number see page 53.
*** Clear iridite finish (gold color), $N_2O_4$ resistant; to complete order number see page 53.

| Shell Size | C Max. | F Dia. ±.010 | F[1] Dia. +.010 –.025 | L Max. | L[1] Max. | N Dia. +.001 –.005 | S +.017 –.016 | V Thread UNEF Class 2A (Plated) | KK Dia. Max. | KK[1] Dia. Max. | KK[2] Max. |
|---|---|---|---|---|---|---|---|---|---|---|---|
| 8 | .965 | .444 | .125 | 1.031 | 1.562 | .473 | .812 | .4375-28 | .578 | .625 | .812 |
| 10 | 1.089 | .558 | .188 | 1.031 | 1.562 | .590 | .938 | .5625-24 | .703 | .750 | .875 |
| 12 | 1.183 | .683 | .312 | 1.031 | 1.562 | .750 | 1.031 | .6875-24 | .828 | .875 | 1.000 |
| 14 | 1.277 | .808 | .375 | 1.031 | 1.812 | .875 | 1.125 | .8125-20 | .953 | 1.000 | 1.125 |
| 16 | 1.371 | .909 | .500 | 1.031 | 1.812 | 1.000 | 1.219 | .9375-20 | 1.078 | 1.125 | 1.188 |
| 18 | 1.465 | 1.034 | .625 | 1.031 | 1.812 | 1.125 | 1.312 | 1.0625-18 | 1.203 | 1.250 | 1.438 |
| 20 | 1.589 | 1.159 | .625 | 1.031 | 1.812 | 1.250 | 1.438 | 1.1875-18 | 1.328 | 1.375 | 1.438 |
| 22 | 1.715 | 1.284 | .750 | 1.031 | 1.938 | 1.375 | 1.562 | 1.3125-18 | 1.453 | 1.500 | 1.625 |
| 24 | 1.838 | 1.409 | .800 | 1.109 | 1.938 | 1.500 | 1.688 | 1.4375-18 | 1.578 | 1.625 | 1.719 |

All dimensions for reference only.

# JT02R (MS27499) — crimp
box mounting receptacle
# JT02R (MS27513) — crimp
box mounting receptacle

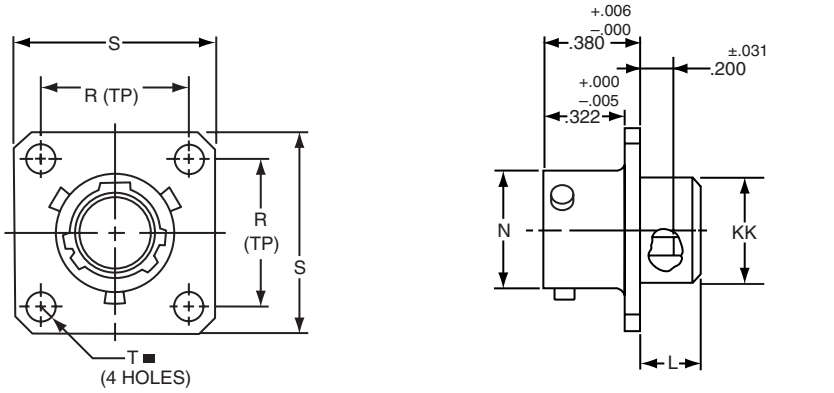


* JT02R-XX-XXX (MS27499)
** JTS02R-XX-XXX
*** JTN02R-XX-XXX

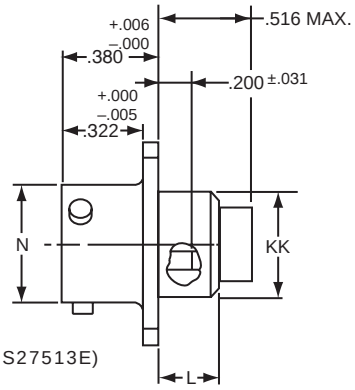


* JT02RE-XX-XXX (MS27513E)
** JTS02RE-XX-XXX
*** JTN02RE-XX-XXX

■ ⊕ .005 DIA Ⓜ

* To complete order number see page 53.
** High temperature version; to complete order number see page 53.
*** Clear iridite finish (gold color), $N_2O_4$ resistant; to complete order number see page 53.

| Shell Size | L Max. | N +.001 –.005 | R (TP) | S ±.016 | T ±.005 | KK Dia. Max. |
|---|---|---|---|---|---|---|
| 8 | .286 | .473 | .594 | .812 | .120 | .438 |
| 10 | .286 | .590 | .719 | .938 | .120 | .563 |
| 12 | .286 | .750 | .812 | 1.031 | .120 | .688 |
| 14 | .286 | .875 | .906 | 1.125 | .120 | .813 |
| 16 | .286 | 1.000 | .969 | 1.219 | .120 | .938 |
| 18 | .286 | 1.125 | 1.062 | 1.312 | .120 | 1.047 |
| 20 | .286 | 1.250 | 1.156 | 1.438 | .120 | 1.172 |
| 22 | .286 | 1.375 | 1.250 | 1.562 | .120 | 1.297 |
| 24 | .286 | 1.500 | 1.375 | 1.688 | .147 | 1.422 |

All dimensions for reference only.
NOTE: For applications requiring an environmental seal, please refer to JT00R, page 12.

# JTP02R (MS27508) – crimp
box mounting receptacle (back panel mounting)

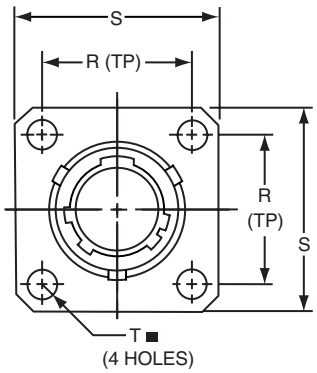


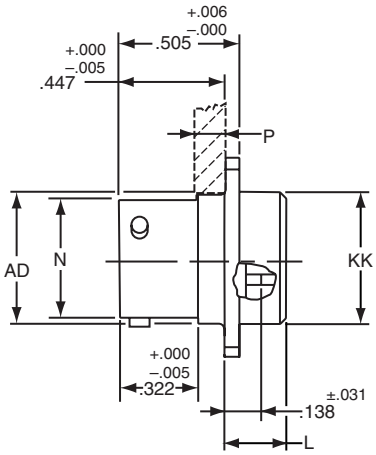


* JTP02RE-XX-XXX (MS27508E)
** JTPS02RE-XX-XXX
*** JTPN02RE-XX-XXX

■ ⊕ .005 DIA Ⓜ

* To complete order number see page 53.
** High temperature version; to complete order number see page 53.
*** Clear iridite finish (gold color), $N_2O_4$ resistant; to complete order number see page 53.

| Shell Size | L Max. | N +.001 –.005 | P Max. Panel Thickness | R (TP) | S ±.016 | T Dia. ±.005 | AD Dia. ±.005 | KK Dia. Max. |
|---|---|---|---|---|---|---|---|---|
| 8 | .225 | .473 | .147 | .594 | .812 | .120 | .516 | .531 |
| 10 | .225 | .590 | .152 | .719 | .938 | .120 | .633 | .656 |
| 12 | .225 | .750 | .152 | .812 | 1.031 | .120 | .802 | .828 |
| 14 | .225 | .875 | .152 | .906 | 1.125 | .120 | .927 | .953 |
| 16 | .225 | 1.000 | .152 | .969 | 1.219 | .120 | 1.052 | 1.078 |
| 18 | .225 | 1.125 | .152 | 1.062 | 1.312 | .120 | 1.177 | 1.203 |
| 20 | .225 | 1.250 | .179 | 1.156 | 1.438 | .120 | 1.302 | 1.328 |
| 22 | .225 | 1.375 | .179 | 1.250 | 1.562 | .120 | 1.427 | 1.453 |
| 24 | .225 | 1.500 | .169 | 1.375 | 1.688 | .147 | 1.552 | 1.578 |

All dimensions for reference only.

# JT06R (MS27473) – crimp
straight plug

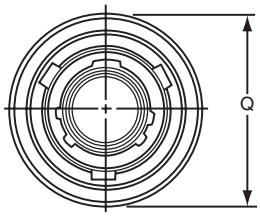


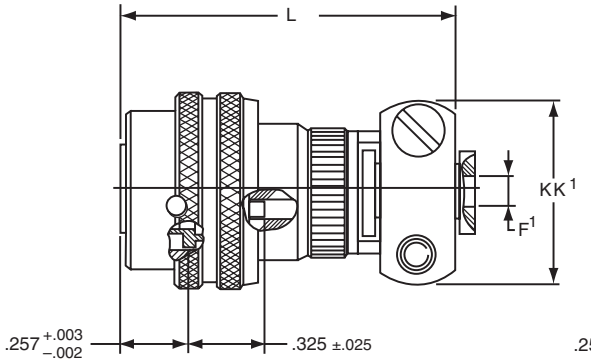


* JT06RE-XX-XXX (SR)
** JTS06RE-XX-XXX (SR)
*** JTN06RE-XX-XXX (SR)

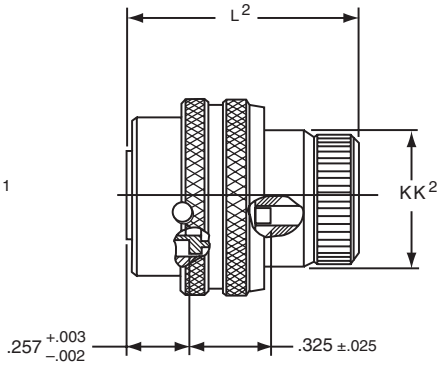


* JT06RE-XX-XXX (MS27473E)
** JTS06RE-XX-XXX
*** JTN06RE-XX-XXX

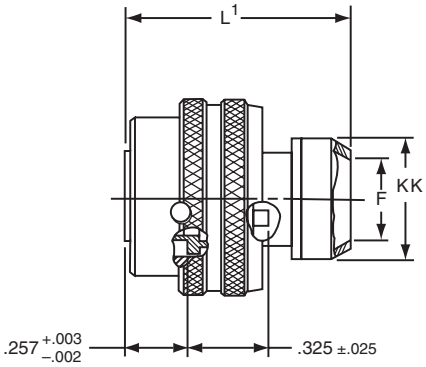


* JT06RP-XX-XXX (MS27473P)
** JTS06RP-XX-XXX
*** JTN06RP-XX-XXX

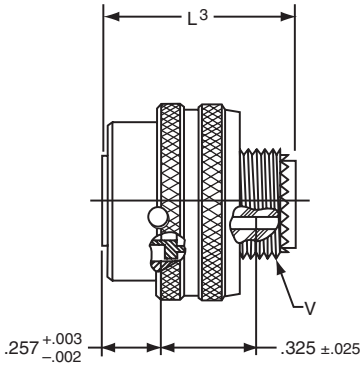


* JT06RT-XX-XXX (MS27473T)
** JTS06RT-XX-XXX
*** JTN06RT-XX-XXX

* To complete order number see page 53.
** High temperature version; to complete order number see page 53.
*** Clear iridite finish (gold color), $N_2O_4$ resistant; to complete order number see page 53.

| Shell Size | F Dia. | F[1] Dia. +.010 –.025 | L Max. | L[1] Max. | L[2] Max. | L[3] Max. | Q Dia. Max. | V Thread Modified | | KK Dia. Max. | KK[1] Max. | KK[2] Dia. Max. |
|---|---|---|---|---|---|---|---|---|---|---|---|---|
| | | | | | | | | Class 2A UNEF | Modified Major Dia. | | | |
| 8 | .444 | .125 | 1.562 | 1.000 | .938 | .891 | .734 | .4375-28 | .421 – .417 | .625 | .812 | .578 |
| 10 | .558 | .188 | 1.562 | 1.000 | .938 | .891 | .844 | .5625-24 | .542 – .538 | .750 | .875 | .703 |
| 12 | .683 | .312 | 1.562 | 1.000 | .938 | .891 | 1.016 | .6875-24 | .667 – .663 | .875 | 1.000 | .828 |
| 14 | .808 | .375 | 1.812 | 1.000 | .938 | .891 | 1.141 | .8125-20 | .791 – .787 | 1.000 | 1.125 | .953 |
| 16 | .909 | .500 | 1.812 | 1.000 | .938 | .891 | 1.265 | .9375-20 | .916 – .912 | 1.125 | 1.188 | 1.078 |
| 18 | 1.034 | .625 | 1.812 | 1.000 | .938 | .891 | 1.391 | 1.0625-18 | 1.034 – 1.030 | 1.250 | 1.438 | 1.203 |
| 20 | 1.159 | .625 | 1.812 | 1.000 | .938 | .891 | 1.500 | 1.1875-18 | 1.158 – 1.154 | 1.375 | 1.438 | 1.328 |
| 22 | 1.284 | .750 | 1.938 | 1.000 | .938 | .891 | 1.625 | 1.3125-18 | 1.283 – 1.279 | 1.500 | 1.625 | 1.453 |
| 24 | 1.409 | .800 | 1.938 | 1.062 | .938 | .891 | 1.750 | 1.4375-18 | 1.408 – 1.404 | 1.625 | 1.719 | 1.578 |

All dimensions for reference only.

# JTG06R (MS27484) – crimp
## straight plug (with grounding fingers)

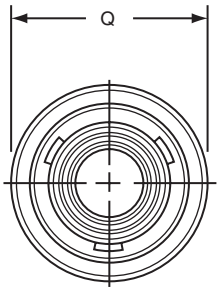


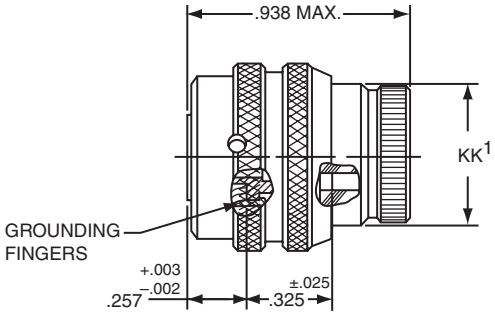


* JTG06RE-XX-XXX (MS27484E)
** JTNG06RE-XX-XXX

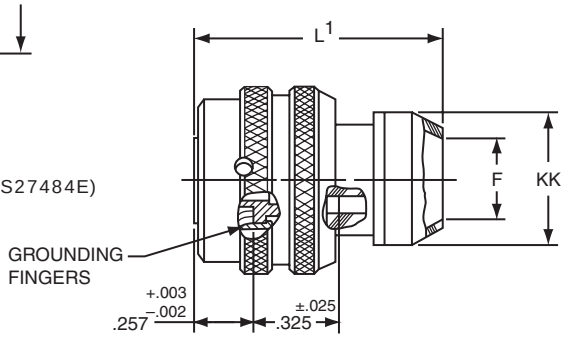


* JTG06RP-XX-XXX (MS27484P)
** JTNG06RP-XX-XXX

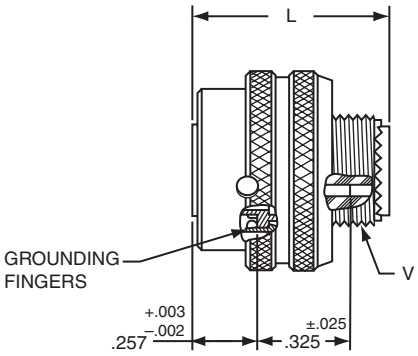


* JTG06RT-XX-XXX (MS27484T)
** JTNG06RT-XX-XXX

* To complete order number see page 53.
** Clear iridite finish (gold color), $N_2O_4$ resistant; to complete order number see page 53.

| Shell Size | F Dia. | L Max. | L1 Max. | Q Dia. Max. | V Thread Modified Class 2A UNEF | V Thread Modified Modified Major Dia. | KK Dia. Max. | KK1 Dia. Max. |
|---|---|---|---|---|---|---|---|---|
| 8 | .444 | .891 | 1.000 | .734 | .4375-28 | .421 – .417 | .625 | .578 |
| 10 | .558 | .891 | 1.000 | .844 | .5625-24 | .542 – .538 | .750 | .703 |
| 12 | .683 | .891 | 1.000 | 1.016 | .6875-24 | .667 – .663 | .875 | .828 |
| 14 | .808 | .891 | 1.000 | 1.141 | .8125-20 | .791 – .787 | 1.000 | .953 |
| 16 | .909 | .891 | 1.000 | 1.265 | .9375-20 | .916 – .912 | 1.125 | 1.078 |
| 18 | 1.034 | .891 | 1.000 | 1.391 | 1.0625-18 | 1.034 – 1.030 | 1.250 | 1.203 |
| 20 | 1.159 | .891 | 1.000 | 1.500 | 1.1875-18 | 1.158 – 1.154 | 1.375 | 1.328 |
| 22 | 1.284 | .891 | 1.000 | 1.625 | 1.3125-18 | 1.283 – 1.279 | 1.500 | 1.453 |
| 24 | 1.409 | .891 | 1.062 | 1.750 | 1.4375-18 | 1.408 – 1.404 | 1.625 | 1.578 |

All dimensions for reference only.

# JT07R (MS27474) — crimp
## jam nut receptacle

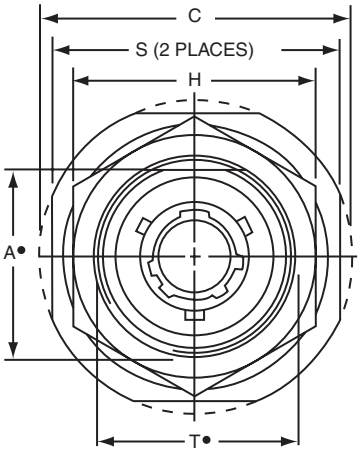


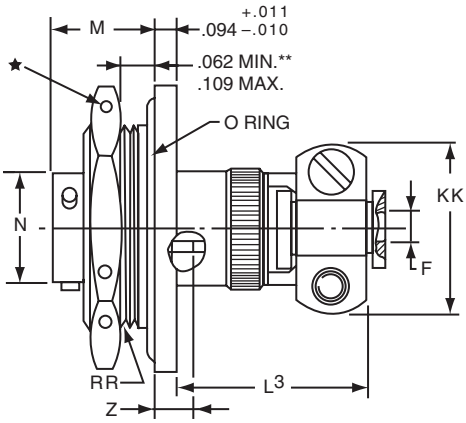


* JT07RE-XX-XXX (SR)
*** JTS07RE-XX-XXX (SR)
**** JTN07RE-XX-XXX (SR)

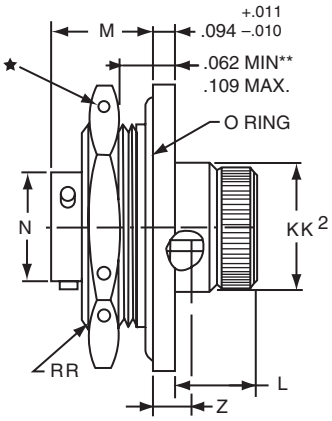


* JT07RE-XX-XXX (MS27474E)
*** JTS07RE-XX-XXX
**** JTN07RE-XX-XXX

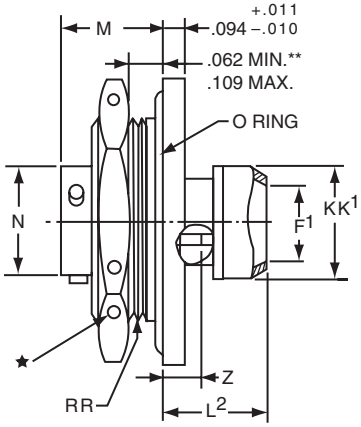


* JT07RP-XX-XXX (MS27474P)
*** JTS07RP-XX-XXX
**** JTN07RP-XX-XXX

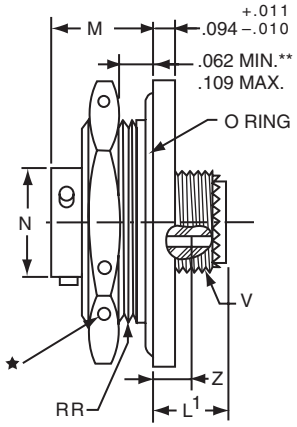


* JT07RT-XX-XXX (MS27474T)
*** JTS07RT-XX-XXX
**** JTN07RT-XX-XXX

★ .059 Dia. Min. 3 lockwire holes.
Formed lockwire hole design (6 holes) is optional.
• "D" shaped mounting hole dimensions.
* To complete order number see page 53.
** Panel Thickness
*** High temperature version; to complete order number see page 53.
**** Clear iridite finish (gold color), $N_2O_4$ resistant; to complete order number see page 53.

| Shell Size | A• +.000 –.010 | C Max. | F Dia +.010 –.025 | F1 Dia. | H Hex +.017 –.016 | L Max. | L1 Max. | L2 Max. | L3 Max. | M ±.005 | N +.001 –.005 | S ±.016 | T• +.010 –.000 | V Thread UNEF Class 2A | Z ±.031 | KK Max. | KK1 Dia. Max. | KK2 Dia. Max. | RR Thread (Plated) Class 2A |
|---|---|---|---|---|---|---|---|---|---|---|---|---|---|---|---|---|---|---|---|
| 8 | .830 | 1.390 | .125 | .444 | 1.062 | .484 | .453 | .563 | 1.047 | .438 | .473 | 1.250 | .884 | .4375-28 | .144 | .812 | .625 | .578 | .8750-20UNEF |
| 10 | .955 | 1.515 | .188 | .558 | 1.188 | .484 | .453 | .563 | 1.047 | .438 | .590 | 1.375 | 1.007 | .5625-24 | .144 | .875 | .750 | .703 | 1.0000-20UNEF |
| 12 | 1.084 | 1.640 | .312 | .683 | 1.312 | .484 | .453 | .563 | 1.047 | .438 | .750 | 1.500 | 1.134 | .6875-24 | .144 | 1.000 | .875 | .828 | 1.1250-18UNEF |
| 14 | 1.208 | 1.765 | .375 | .808 | 1.438 | .484 | .453 | .563 | 1.297 | .438 | .875 | 1.625 | 1.259 | .8125-20 | .144 | 1.125 | 1.000 | .953 | 1.2500-18UNEF |
| 16 | 1.333 | 1.953 | .500 | .909 | 1.562 | .484 | .453 | .563 | 1.297 | .438 | 1.000 | 1.781 | 1.384 | .9375-20 | .144 | 1.188 | 1.125 | 1.078 | 1.3750-18UNEF |
| 18 | 1.459 | 2.031 | .625 | 1.034 | 1.688 | .484 | .453 | .563 | 1.297 | .438 | 1.125 | 1.890 | 1.507 | 1.0625-18 | .144 | 1.438 | 1.250 | 1.203 | 1.5000-18UNEF |
| 20 | 1.576 | 2.156 | .625 | 1.159 | 1.812 | .453 | .422 | .531 | 1.266 | .464 | 1.250 | 2.016 | 1.634 | 1.1875-18 | .188 | 1.438 | 1.375 | 1.328 | 1.6250-18UNEF |
| 22 | 1.701 | 2.280 | .750 | 1.284 | 2.000 | .453 | .422 | .531 | 1.391 | .464 | 1.375 | 2.140 | 1.759 | 1.3125-18 | .188 | 1.625 | 1.500 | 1.453 | 1.7500-18UNS |
| 24 | 1.826 | 2.405 | .800 | 1.409 | 2.125 | .375 | .422 | .609 | 1.391 | .464 | 1.500 | 2.265 | 1.884 | 1.4375-18 | .188 | 1.719 | 1.625 | 1.578 | 1.8750-16UN |

All dimensions for reference only.

# JTL07R — crimp
## jam nut receptacle
## (miniature jam nut mounting dimensions)

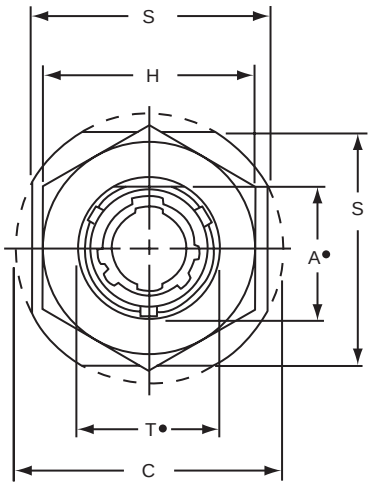


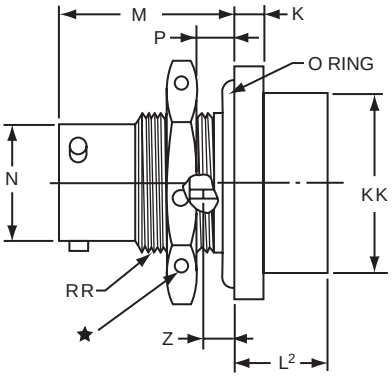


* JTL07RP-XX-XXX
*** JTLS07RP-XX-XXX
**** JTLN07RP-XX-XXX

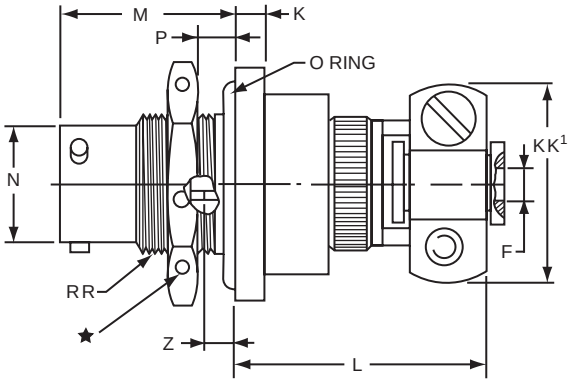


* JTL07RE-XX-XXX (SR)
*** JTLS07RE-XX-XXX (SR)
**** JTLN07RE-XX-XXX (SR)

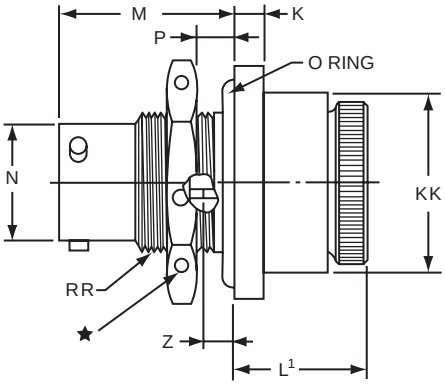


* JTL07RE-XX-XXX
*** JTLS07RE-XX-XXX
**** JTLN07RE-XX-XXX

★ .059 Dia. Min. 3 lockwire holes.
Formed lockwire hole design (6 holes) is optional.
• "D" shaped mounting hole dimensions.
* To complete order number see page 53.
*** High temperature version; to complete order number see page 53.
**** Clear iridite finish (gold color), $N_2O_4$ resistant; to complete order number see page 53.

| Shell Size | A• +.000 –.010 | C Max. | F Dia. +.010 –.025 | H Hex +.017 –.016 | K +.011 –.010 | L Max. | L1 Max. | L2 Max. | M ±.005 | N Dia. +.001 –.005 | P Panel Thickness Min. | P Panel Thickness Max. | S ±.016 | T• +.010 –.000 | Z ±.026 | KK Dia. Max. | KK1 Max. | RR Thread Class 2A |
|---|---|---|---|---|---|---|---|---|---|---|---|---|---|---|---|---|---|---|
| 8 | .542 | 1.077 | .125 | .750 | .125 | 1.062 | .641 | .375 | .630 | .473 | .062 | .125 | .938 | .572 | .047 | .688 | .812 | .5625-24UNEF |
| 10 | .669 | 1.203 | .188 | .875 | .125 | 1.062 | .641 | .375 | .630 | .590 | .062 | .125 | 1.062 | .697 | .047 | .812 | .875 | .6875-24UNEF |
| 12 | .830 | 1.390 | .312 | 1.062 | .125 | 1.062 | .641 | .375 | .630 | .750 | .062 | .125 | 1.250 | .844 | .047 | .938 | 1.000 | .8750-20UNEF |
| 14 | .955 | 1.515 | .375 | 1.188 | .125 | 1.062 | .641 | .375 | .630 | .875 | .062 | .125 | 1.375 | 1.007 | .047 | 1.062 | 1.125 | 1.0000-20UNEF |
| 16 | 1.084 | 1.640 | .500 | 1.312 | .125 | 1.062 | .641 | .375 | .630 | 1.000 | .062 | .125 | 1.500 | 1.134 | .047 | 1.188 | 1.188 | 1.1250-18UNEF |
| 18 | 1.208 | 1.765 | .625 | 1.438 | .125 | 1.062 | .641 | .375 | .630 | 1.125 | .062 | .125 | 1.625 | 1.259 | .047 | 1.312 | 1.438 | 1.2500-18UNEF |
| 20 | 1.333 | 1.953 | .625 | 1.562 | .156 | 1.062 | .703 | .328 | .755 | 1.250 | .062 | .250 | 1.812 | 1.384 | .172 | 1.469 | 1.438 | 1.3750-18UNEF |
| 22 | 1.459 | 2.075 | .750 | 1.688 | .156 | 1.062 | .703 | .328 | .755 | 1.375 | .062 | .250 | 1.938 | 1.507 | .172 | 1.594 | 1.625 | 1.5000-18UNEF |
| 24 | 1.575 | 2.203 | .800 | 1.812 | .156 | 1.062 | .703 | .328 | .755 | 1.500 | .062 | .250 | 2.062 | 1.634 | .172 | 1.719 | 1.719 | 1.6250-18UNEF |

All dimensions for reference only.

# JT08R (MS27500) — crimp
## 90° plug

* JT08RP-XX-XXX
** JTS08RP-XX-XXX
*** JTN08RP-XX-XXX

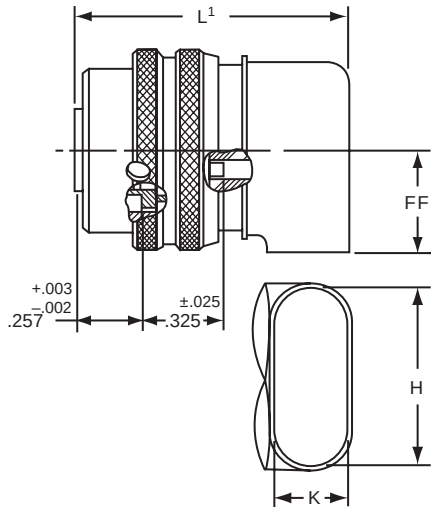


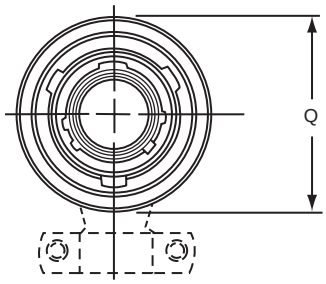


* JT08RE-XX-XXX (MS27500E)
** JTS08RE-XX-XXX
*** JTN08RE-XX-XXX

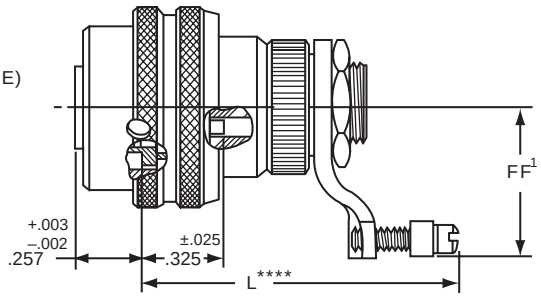


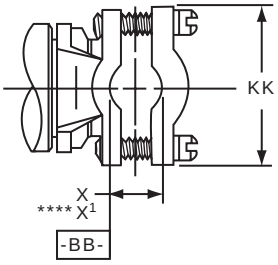


* To complete order number see page 53.
** High temperature version; to complete order number see page 53.
*** Clear iridite finish (gold color), $N_2O_4$ resistant; to complete order number see page 53.
**** Dimensions L and $X^1$ are applicable when the end of the screw is flush with the surface BB.

| Shell Size | H ±.010 | K ±.010 | L Max. | L¹ Max. | Q Dia. Max. | X Min. Cable | X¹ Max. Cable | FF Max. | FF¹ Max. | KK Max. |
|---|---|---|---|---|---|---|---|---|---|---|
| 8 | .547 | .156 | 1.578 | 1.125 | .734 | .082 | .234 | .438 | .984 | .755 |
| 10 | .709 | .188 | 1.578 | 1.156 | .844 | .082 | .234 | .516 | 1.016 | .755 |
| 12 | .829 | .281 | 1.656 | 1.250 | 1.016 | .114 | .328 | .594 | 1.078 | .817 |
| 14 | 1.000 | .438 | 1.844 | 1.406 | 1.141 | .176 | .457 | .656 | 1.203 | .943 |
| 16 | 1.021 | .500 | 2.000 | 1.469 | 1.265 | .238 | .634 | .719 | 1.265 | 1.067 |
| 18 | 1.145 | .562 | 2.046 | 1.531 | 1.391 | .208 | .614 | .781 | 1.328 | 1.149 |
| 20 | 1.270 | .625 | 2.125 | 1.594 | 1.500 | .302 | .608 | .844 | 1.359 | 1.399 |
| 22 | 1.395 | .688 | 2.250 | 1.656 | 1.625 | .302 | .823 | .906 | 1.421 | 1.399 |
| 24 | 1.520 | .750 | 2.422 | 1.797 | 1.750 | .332 | .853 | .969 | 1.703 | 1.587 |

All dimensions for reference only.

# JT00 (MS27475) — hermetic
## wall mounting receptacle

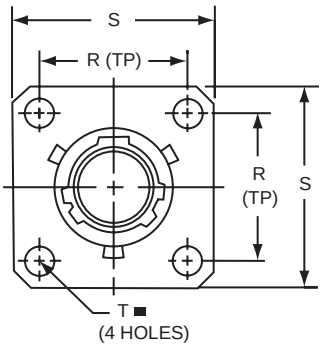


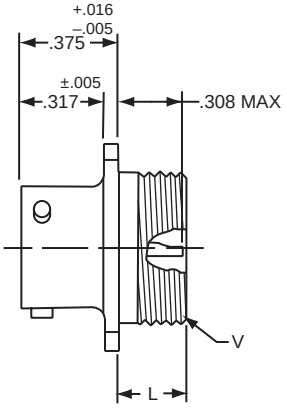


* JT00H-XX-XXX
** JT00Y-XX-XXX (MS27475YXXDXXX)
*** JTS00Y-XX-XXX (MS27482YXXEXXX)

■ ⊕ .005 DIA Ⓜ

* To complete order number see page 53.
** Interfacial seal wafer; to complete order number see page 53.
*** High temperature version, interfacial seal wafer with stainless steel shell; to complete order number see page 53.

| Shell Size | L Max. | N +.001 –.005 | R (TP) | S ±.016 | T ±.005 | V Thread Class 2A |
|---|---|---|---|---|---|---|
| 8 | .234 | .473 | .594 | .812 | .120 | .5625-24UNEF |
| 10 | .234 | .590 | .719 | .938 | .120 | .6875-24UNEF |
| 12 | .234 | .750 | .812 | 1.031 | .120 | .8125-20UNEF |
| 14 | .234 | .875 | .906 | 1.125 | .120 | .9375-20UNEF |
| 16 | .234 | 1.000 | .969 | 1.219 | .120 | 1.0625-18UNEF |
| 18 | .234 | 1.125 | 1.062 | 1.312 | .120 | 1.1875-18UNEF |
| 20 | .234 | 1.250 | 1.156 | 1.438 | .120 | 1.3125-18UNEF |
| 22 | .234 | 1.375 | 1.250 | 1.562 | .120 | 1.4375-18UNEF |
| 24 | .313 | 1.500 | 1.375 | 1.688 | .147 | 1.5625-18UNEF |

All dimensions for reference only.

# JT02 (MS27476) — hermetic
box mounting receptacle

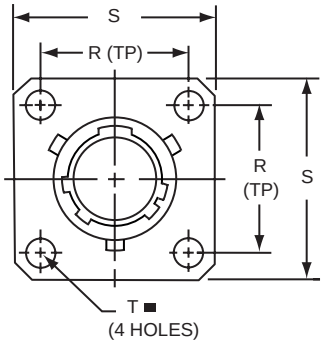


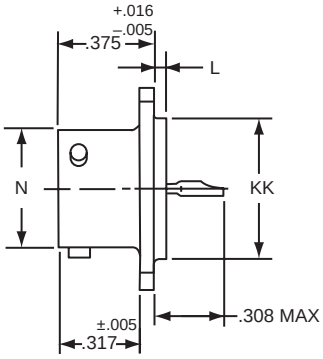


* JT02H-XX-XXX
** JT02Y-XX-XXX (MS27476YXXDXXX)
*** JTS02Y-XX-XXX (MS27476YXXEXXX)

■ ⊕ .005 DIA Ⓜ

* To complete order number see page 53.
** Interfacial seal wafer; to complete order number see page 53.
*** High temperature version, interfacial seal wafer with stainless steel shell; to complete order number see page 53.

| Shell Size | L +.006 –.015 | N +.001 –.005 | R (TP) | S ±.016 | T ±.005 | KK +.001 –.005 |
|---|---|---|---|---|---|---|
| 8 | .051 | .473 | .594 | .812 | .120 | .562 |
| 10 | .051 | .590 | .719 | .938 | .120 | .672 |
| 12 | .051 | .750 | .812 | 1.031 | .120 | .781 |
| 14 | .051 | .875 | .906 | 1.125 | .120 | .906 |
| 16 | .051 | 1.000 | .969 | 1.219 | .120 | 1.031 |
| 18 | .051 | 1.125 | 1.062 | 1.312 | .120 | 1.156 |
| 20 | .051 | 1.250 | 1.156 | 1.438 | .120 | 1.250 |
| 22 | .080 | 1.375 | 1.250 | 1.562 | .120 | 1.375 |
| 24 | .080 | 1.500 | 1.375 | 1.688 | .147 | 1.500 |

All dimensions for reference only.

# JT07 (MS27477) — hermetic
## jam nut receptacle

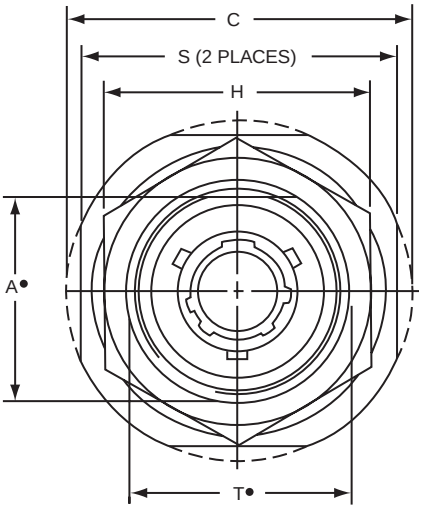


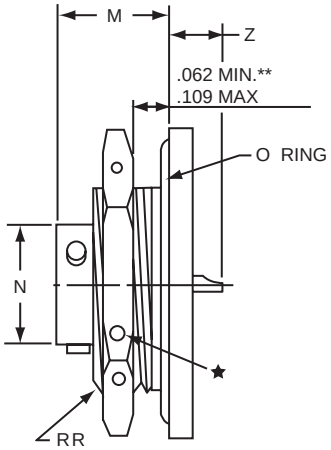


* JT07H-XX-XXX
*** JT07Y-XX-XX (MS27477YXXDXXX)
**** JTS07Y-XX-XXX (MS27483YXXEXXX)

★ .059 Dia. Min. 3 lockwire holes. Formed lockwire hole design (6 holes) is optional.
• "D" shaped mounting hole dimensions.
* To complete order number see page 53.
** Panel Thickness
*** Interfacial seal wafer; to complete order number see page 53.
**** High temperature version, interfacial seal wafer with stainless steel shell; to complete order number see page 53.

| Shell Size | A• +.000 –.010 | C Max. | H +.017 –.016 | M ±.005 | N +.001 –.005 | S ±.016 | T• +.010 –.000 | Z Max. | RR Thread Class 2A |
|---|---|---|---|---|---|---|---|---|---|
| 8 | .830 | 1.390 | 1.062 | .438 | .473 | 1.250 | .884 | .244 | .8750-20UNEF |
| 10 | .955 | 1.515 | 1.188 | .438 | .590 | 1.375 | 1.007 | .244 | 1.0000-20UNEF |
| 12 | 1.084 | 1.640 | 1.312 | .438 | .750 | 1.500 | 1.134 | .244 | 1.1250-18UNEF |
| 14 | 1.208 | 1.765 | 1.438 | .438 | .875 | 1.625 | 1.259 | .244 | 1.2500-18UNEF |
| 16 | 1.333 | 1.953 | 1.562 | .438 | 1.000 | 1.781 | 1.384 | .244 | 1.3750-18UNEF |
| 18 | 1.459 | 2.031 | 1.688 | .438 | 1.125 | 1.890 | 1.507 | .244 | 1.5000-18UNEF |
| 20 | 1.576 | 2.156 | 1.812 | .464 | 1.250 | 2.016 | 1.634 | .218 | 1.6250-18UNEF |
| 22 | 1.701 | 2.280 | 2.000 | .464 | 1.375 | 2.140 | 1.759 | .218 | 1.7500-18UNS |
| 24 | 1.826 | 2.405 | 2.125 | .464 | 1.500 | 2.265 | 1.884 | .218 | 1.8750-16UN |

All dimensions for reference only.

# JTI (MS27478) — hermetic
## solder mounting receptacle

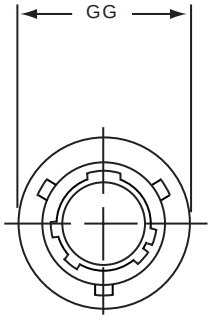


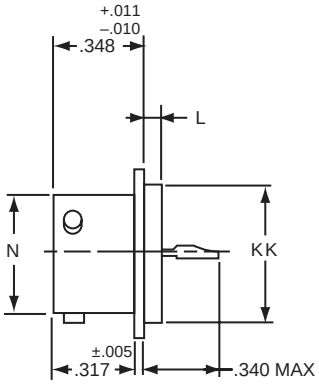


* JTIH-XX-XXX
** JTIY-XX-XX (MS27478YXXDXXX)
*** JTSIY-XX-XXX (MS27503YXXEXXX)

* To complete order number see page 53.
** Interfacial seal wafer; to complete order number see page 53.
*** High temperature version, interfacial seal wafer with stainless steel shell; to complete order number see page 53.

| Shell Size | L +.011 –.010 | N +.001 –.005 | GG +.011 –.010 | KK +.001 –.005 |
|---|---|---|---|---|
| 8 | .078 | .473 | .687 | .562 |
| 10 | .078 | .590 | .797 | .672 |
| 12 | .078 | .750 | .906 | .781 |
| 14 | .078 | .875 | 1.031 | .906 |
| 16 | .078 | 1.000 | 1.156 | 1.031 |
| 18 | .078 | 1.125 | 1.281 | 1.156 |
| 20 | .078 | 1.250 | 1.375 | 1.250 |
| 22 | .107 | 1.375 | 1.500 | 1.375 |
| 24 | .107 | 1.500 | 1.625 | 1.500 |

All dimensions for reference only.
Weld mounting hermetic receptacle also available. Consult Amphenol, Sidney, NY for availability and dimensions.

# JT — accessories
## plug protection cap

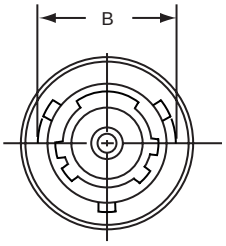


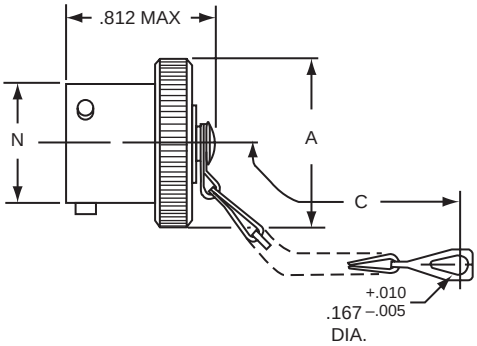


* 10-547138-XXX (MS27510XXC)

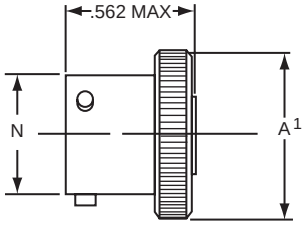


* 10-241853-XXX (MS27352XXX)

*For MS stamping identification, accessories must be ordered by MS part number.*
*If ordered by 10- part number, they will be stamped with said number.*
* To complete order number, add shell size and suffix number.
For example, shell size 10 with cadmium plate, nickel base would be 10-241801-107, MS27510A10C or MS27352A10.

| Shell Size | A Dia. Max. | A[1] Dia. Max. | B +.000 –.016 | C Approx. | N Dia. +.001 –.005 |
|---|---|---|---|---|---|
| 8 | .719 | .703 | .563 | 3.000 | .473 |
| 10 | .844 | .828 | .680 | 3.000 | .590 |
| 12 | 1.000 | .984 | .859 | 3.500 | .750 |
| 14 | 1.125 | 1.109 | .984 | 3.500 | .875 |
| 16 | 1.250 | 1.234 | 1.108 | 3.500 | 1.000 |
| 18 | 1.375 | 1.359 | 1.233 | 3.500 | 1.125 |
| 20 | 1.500 | 1.484 | 1.358 | 4.000 | 1.250 |
| 22 | 1.625 | 1.609 | 1.483 | 4.000 | 1.375 |
| 24 | 1.750 | 1.734 | 1.610 | 4.000 | 1.500 |

All dimensions for reference only.

| Finish | 10- Number Suffix | MS Number Suffix with chain | MS Number Suffix without chain |
|---|---|---|---|
| Chromate treat | -XX0 | | |
| Anodic coating | -XX5 | CXXC | CXX |
| Cadmium plate nickel base | -XX7 | AXXC | AXX |
| Olive drab, cadmium, nickel base | -XX9 | BXXC | BXX |
| Electroless nickel | | -XXG | FXXC |

FXX

# JT — accessories
## receptacle protection cap

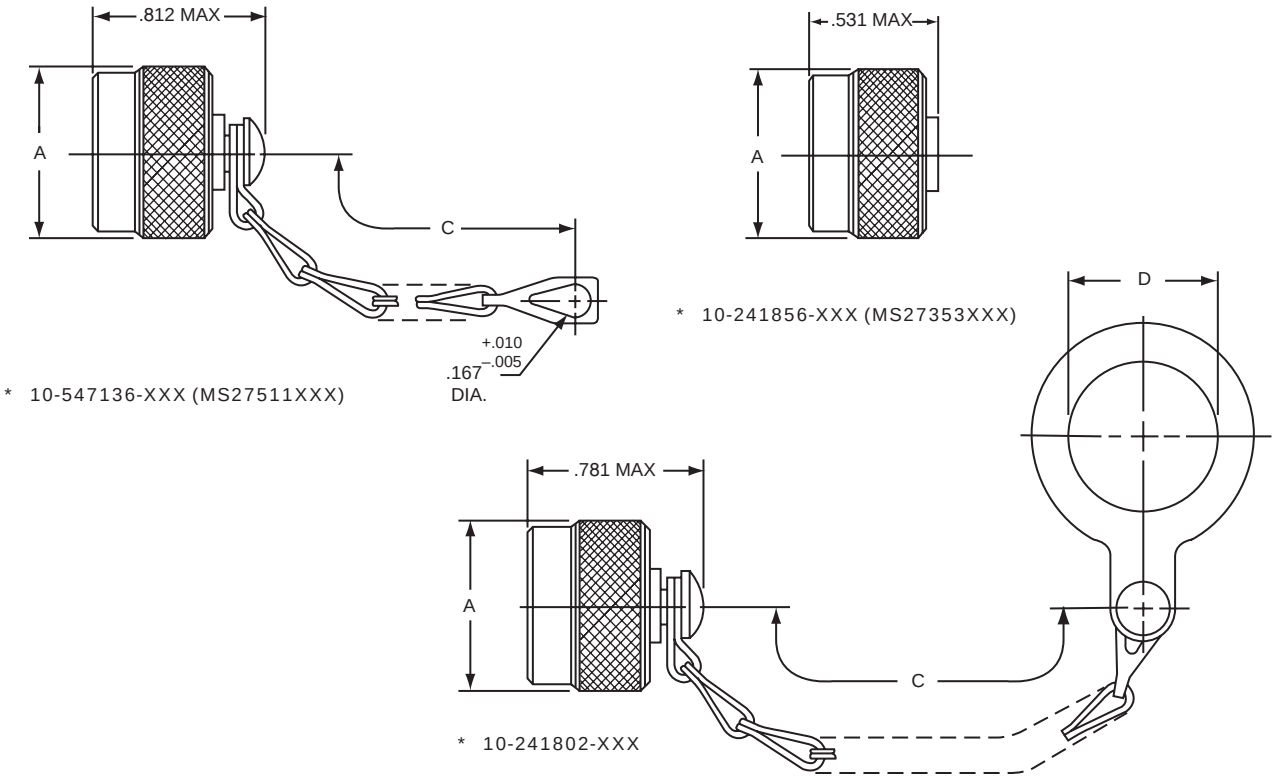


*For MS stamping identification, accessories must be ordered by MS part number.*
*If ordered by 10- part number, they will be stamped with said number.*
* To complete order number, add shell size and suffix number.
For example, shell size 10 with cadmium plate, nickel base would be 10-241800-107, MS27511A10C or MS27353A10.

| Shell Size | A Dia. Max. | C Approx. | D +.010 –.000 |
|---|---|---|---|
| 8 | .719 | 3.000 | .891 |
| 10 | .844 | 3.000 | 1.016 |
| 12 | 1.000 | 3.500† | 1.141 |
| 14 | 1.125 | 3.500 | 1.266 |
| 16 | 1.250 | 3.500 | 1.391 |
| 18 | 1.375 | 3.500 | 1.516 |
| 20 | 1.500 | 4.000 | 1.641 |
| 22 | 1.625 | 4.000 | 1.766 |
| 24 | 1.750 | 4.000 | 1.891 |

† 3.000 for MS27511
All dimensions for reference only.

| Finish | 10- Number Suffix | MS Number Suffix with chain | MS Number Suffix without chain |
|---|---|---|---|
| Chromate treat | -XX0 | | |
| Anodic coating | -XX5 | CXXC | CXX |
| Cadmium plate nickel base | -XX7 | AXXC | AXX |
| Olive drab, cadmium, nickel base | -XX9 | BXXC | BXX |
| Electroless nickel | | -XXG | FXXC |

FXX

# JT/LJT — accessories
## strain relief (crimp type)

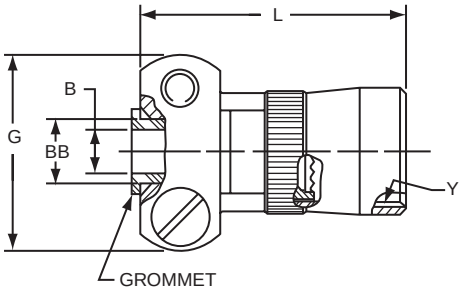


* 10-405982-XXX (MS27506XXX-2 reference M85049/49)

*For MS stamping identification, accessories must be ordered by MS part number.*
*If ordered by 10-part number, they will be stamped with said number.*

*To complete order number, add shell size and suffix number.

| Finish | 10-Number Suffix | MS27506 Suffix | M85049/49 Suffix |
|---|---|---|---|
| Chromate treat | -XX0 | | NA |
| Anodic coating | -XX5 | CXX-2 | (-2-XXA) |
| Cadmium plate nickel base | -XX7 | AXX-2 | NA |
| Olive drab, cadmium, nickel base | -XX9 | BXX-2 | (-2-XXW) |
| Electroless nickel | -XXG | FXX-2 | (-2-XXN) |

For example: Shell size 10 with cadmium plate, nickel base would be 10-405982-107
or M85049/49-2-10W

| Shell Size | B Dia. +.010 –.025 | G Max. | L Max. | Y Thread (Modified) Size Class 2B | Y Thread (Modified) Modified Minor Dia. | BB Dia. +.000 –.011 | Screw Size |
|---|---|---|---|---|---|---|---|
| 8 | .125 | .775 | .984 | .4375-28UNEF | .399 – .405 | .250 | 6-32UNC |
| 10 | .188 | .837 | .984 | .5625-24UNEF | .524 – .529 | .312 | 6-32UNC |
| 12 | .312 | .963 | .984 | .6875-24UNEF | .649 – .654 | .438 | 6-32UNC |
| 14 | .375 | 1.087 | 1.234 | .8125-20UNEF | .766 – .771 | .562 | 6-32UNC |
| 16 | .500 | 1.150 | 1.234 | .9375-20UNEF | .891 – .896 | .625 | 6-32UNC |
| 18 | .625 | 1.400 | 1.234 | 1.0625-18UNEF | 1.002 – 1.007 | .750 | 8-32UNC |
| 20 | .625 | 1.400 | 1.234 | 1.1875-18UNEF | 1.135 – 1.140 | .750 | 8-32UNC |
| 22 | .750 | 1.587 | 1.359 | 1.3125-18UNEF | 1.252 – 1.257 | .938 | 8-32UNC |
| 24 | .800 | 1.681 | 1.281 | 1.4375-18UNEF | 1.377 – 1.382 | 1.000 | 8-32UNC |

All dimensions for reference only.
Note: For solder type cable clamp 10-241055-XXX (M85049/49) consult Amphenol, Sidney, NY.

# LJT00R (MS27466) — crimp
## wall mounting receptacle

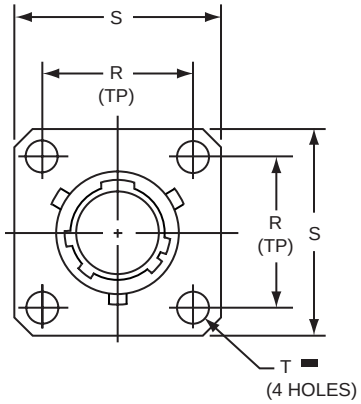


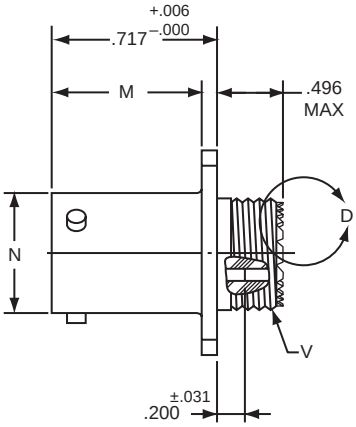


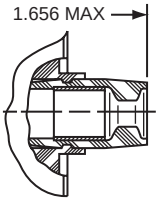


VIEW D ENLARGED
FOR COAXIAL USE ONLY

*LJT00RE-XX-XXX (MS27466E)
*LJT00RT-XX-XXX (MS27466T)

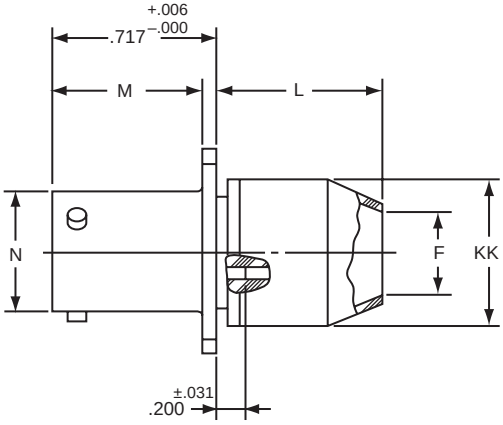


*LJT00RP-XX-XXX (MS27466P)

▬ ⊕ .005 DIA Ⓜ

* To complete order number see page 53.

| Shell Size | F Dia. | L Max. | M +.000 –.005 | N +.001 –.005 | R (TP) | S ±.016 | T Dia. ±.005 | V Thread Class 2A (Plated) | KK Dia. Max. |
|---|---|---|---|---|---|---|---|---|---|
| 9 | .444 | .813 | .632 | .572 | .719 | .938 | .128 | .4375-28 UNEF | .608 |
| 11 | .558 | .813 | .632 | .700 | .812 | 1.031 | .128 | .5625-24 UNEF | .734 |
| 13 | .683 | .813 | .632 | .850 | .906 | 1.125 | .128 | .6875-24 UNEF | .858 |
| 15 | .808 | .813 | .632 | .975 | .969 | 1.219 | .128 | .8125-20 UNEF | .984 |
| 17 | .909 | .813 | .632 | 1.100 | 1.062 | 1.312 | .128 | .9375-20 UNEF | 1.110 |
| 19 | 1.034 | .813 | .632 | 1.207 | 1.156 | 1.438 | .128 | 1.0625-18 UNEF | 1.234 |
| 21 | 1.159 | .906 | .602 | 1.332 | 1.250 | 1.562 | .128 | 1.1875-18 UNEF | 1.360 |
| 23 | 1.284 | .906 | .602 | 1.457 | 1.375 | 1.688 | .147 | 1.3125-18 UNEF | 1.484 |
| 25 | 1.409 | .906 | .602 | 1.582 | 1.500 | 1.812 | .147 | 1.4375-18 UNEF | 1.610 |

All dimensions for reference only.

# LJTPQ00R (MS27656) — crimp
## wall mounting receptacle (back panel mounting)

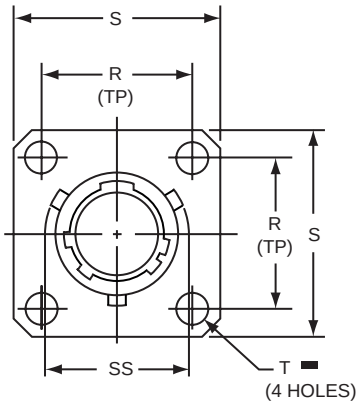


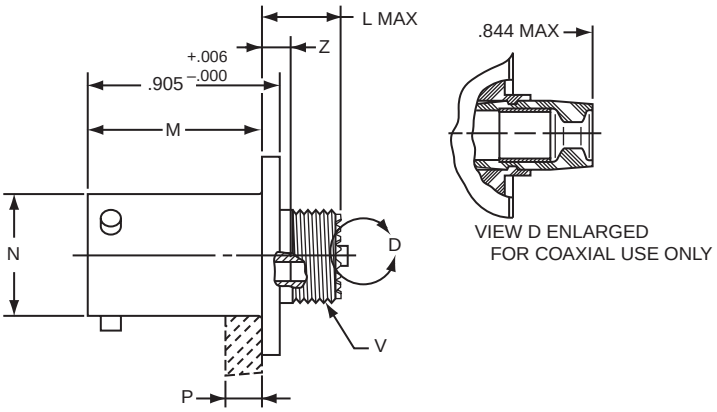


* LJTPQ00RE-XX-XXX (MS27656E)
* LJTPQ00RT-XX-XXX (MS27656T)

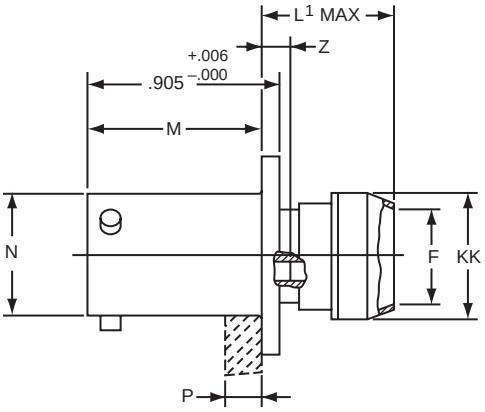


* LJTPQ00RP-XX-XXX (MS27656P)

▬ ⊕ .005 DIA Ⓜ

* To complete order number see page 53.

| Shell Size | F Dia. ±.010 | L Max. | L[1] Max. | M +.000 –.005 | N Dia. | P Max Panel Thickness | R (TP) | S +.011 –.010 | T Dia. ±.005 | V Thread Class 2A (Plated) | Z Max | KK Dia. Max | SS Dia. +.000 –.016 |
|---|---|---|---|---|---|---|---|---|---|---|---|---|---|
| 9 | .444 | .453 | .641 | .820 | .572 | .234 | .719 | .938 | .128 | .4375-28 UNEF | .138 | .625 | .662 |
| 11 | .558 | .453 | .641 | .820 | .700 | .234 | .812 | 1.031 | .128 | .5625-24 UNEF | .138 | .750 | .810 |
| 13 | .683 | .453 | .641 | .820 | .850 | .234 | .906 | 1.125 | .128 | .6875-24 UNEF | .138 | .875 | .960 |
| 15 | .808 | .453 | .641 | .820 | .975 | .234 | .969 | 1.219 | .128 | .8125-20 UNEF | .138 | 1.000 | 1.085 |
| 17 | .909 | .453 | .641 | .820 | 1.100 | .234 | 1.062 | 1.312 | .128 | .9375-20 UNEF | .138 | 1.125 | 1.210 |
| 19 | 1.034 | .453 | .641 | .820 | 1.207 | .234 | 1.156 | 1.438 | .128 | 1.0625-18 UNEF | .138 | 1.250 | 1.317 |
| 21 | 1.159 | .484 | .672 | .790 | 1.332 | .204 | 1.250 | 1.562 | .128 | 1.1875-18 UNEF | .168 | 1.375 | 1.442 |
| 23 | 1.284 | .484 | .672 | .790 | 1.457 | .204 | 1.375 | 1.688 | .147 | 1.3125-18 UNEF | .168 | 1.500 | 1.567 |
| 25 | 1.409 | .484 | .672 | .790 | 1.582 | .193 | 1.500 | 1.812 | .147 | 1.4375-18 UNEF | .168 | 1.625 | 1.692 |

All dimensions for reference only.
Note: MS27656 superseded MS 27515.

# LJT01R — crimp
## line receptacle

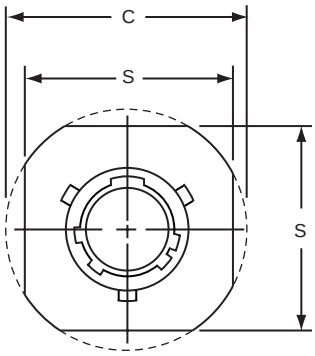


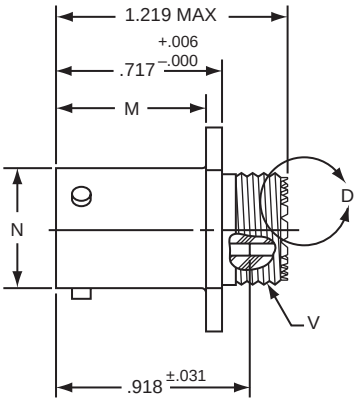


* LJT01RE-XX-XXX
* LJT01RT-XX-XXX

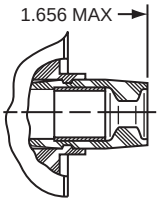


VIEW D ENLARGED
FOR COAXIAL USE ONLY

* To complete order number see page 53.

| Shell Size | C Max. | M +.000 –.005 | N +.001 –.005 | S ±.016 | V Thread Ref. Class 2A (Plated) |
|---|---|---|---|---|---|
| 9 | 1.094 | .632 | .572 | .938 | .4375-28 UNEF |
| 11 | 1.188 | .632 | .700 | 1.031 | .5625-24 UNEF |
| 13 | 1.281 | .632 | .850 | 1.125 | .6875-24 UNEF |
| 15 | 1.375 | .632 | .975 | 1.219 | .8125-20 UNEF |
| 17 | 1.469 | .632 | 1.100 | 1.312 | .9375-20 UNEF |
| 19 | 1.594 | .632 | 1.207 | 1.438 | 1.0625-18 UNEF |
| 21 | 1.719 | .602 | 1.332 | 1.562 | 1.1875-18 UNEF |
| 23 | 1.844 | .602 | 1.457 | 1.688 | 1.3125-18 UNEF |
| 25 | 1.969 | .602 | 1.582 | 1.812 | 1.4375-18 UNEF |

All dimensions for reference only.

# LJT02R (MS27496) — crimp
box mounting receptacle
# LJTP02R (MS27505) — crimp
box mounting receptacle (back panel mounting)

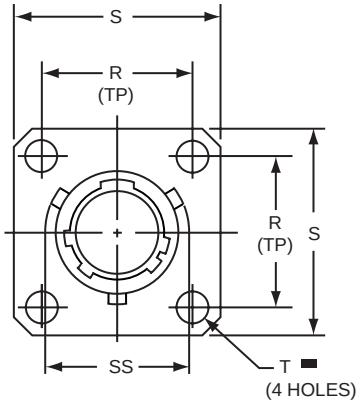


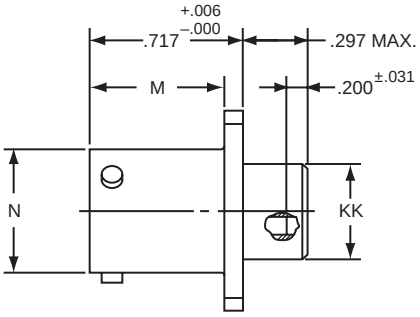


* LJT02RE-XX-XXX (MS27496E)

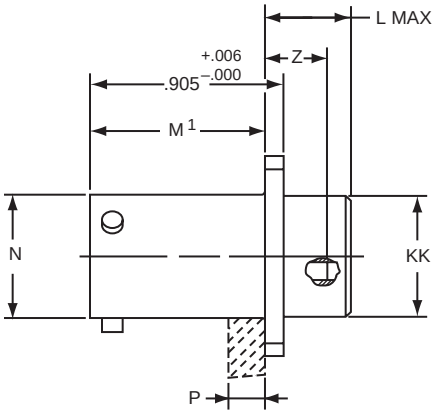


* LJTP02RE-XX-XXX (MS27505E)

■ ⊕ .005 DIA Ⓜ

* To complete order number see page 53.

| Shell Size | L Max. | M +.000 –.005 | M[1] +.001 –.005 | N Dia. +.001 –.005 | P Max. Panel Thickness | R (TP) | S +.011 –.010 | T Dia. ±.005 | Z ±.031 | KK Dia. +.006 –.005 | SS Dia. +.000 –.016 |
|---|---|---|---|---|---|---|---|---|---|---|---|
| 9 | .203 | .632 | .820 | .572 | .234 | .719 | .938 | .128 | .107 | .433 | .662 |
| 11 | .203 | .632 | .820 | .700 | .234 | .812 | 1.031 | .128 | .107 | .557 | .810 |
| 13 | .203 | .632 | .820 | .850 | .234 | .906 | 1.125 | .128 | .107 | .676 | .960 |
| 15 | .203 | .632 | .820 | .975 | .234 | .969 | 1.219 | .128 | .107 | .801 | 1.085 |
| 17 | .203 | .632 | .820 | 1.100 | .234 | 1.062 | 1.312 | .128 | .107 | .926 | 1.210 |
| 19 | .203 | .632 | .820 | 1.207 | .234 | 1.156 | 1.438 | .128 | .107 | 1.032 | 1.317 |
| 21 | .234 | .602 | .790 | 1.332 | .204 | 1.250 | 1.562 | .128 | .137 | 1.157 | 1.442 |
| 23 | .234 | .602 | .790 | 1.457 | .204 | 1.375 | 1.688 | .147 | .137 | 1.282 | 1.567 |
| 25 | .234 | .602 | .790 | 1.582 | .193 | 1.500 | 1.812 | .147 | .137 | 1.407 | 1.692 |

All dimensions for reference only.

# LJT06R (MS27467) — crimp
## straight plug

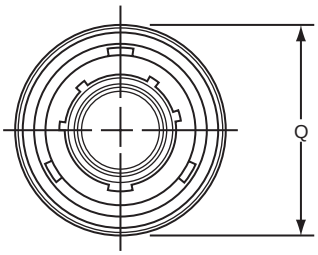


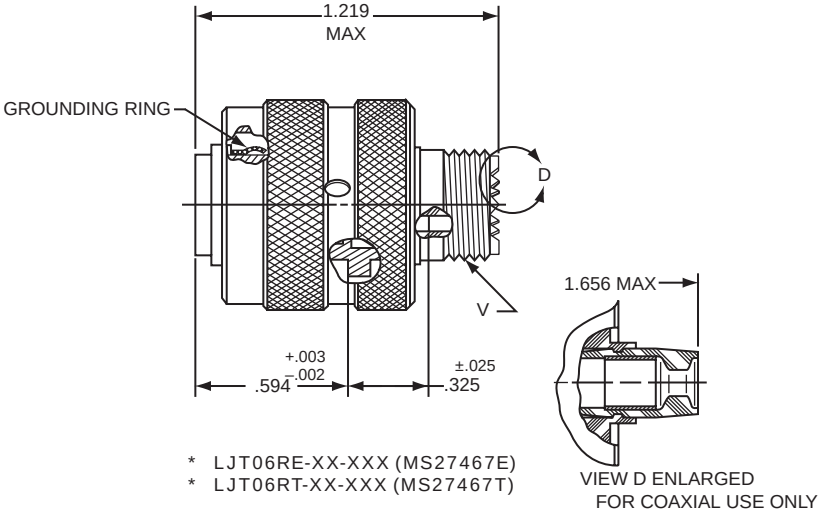


* LJT06RE-XX-XXX (MS27467E)
* LJT06RT-XX-XXX (MS27467T)

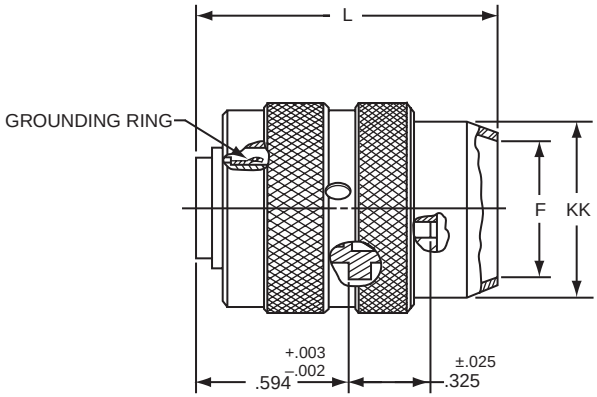


* LJT06RP-XX-XXX (MS27467P)

* To complete order number see page 53.

| Shell Size | F Dia. | L Max. | Q Max. | V Thread Class 2A (Plated) | KK Dia. Max. |
|---|---|---|---|---|---|
| 9 | .444 | 1.531 | .844 | .4375-28 UNEF | .608 |
| 11 | .528 | 1.531 | .969 | .5625-24 UNEF | .734 |
| 13 | .683 | 1.531 | 1.141 | .6875-24 UNEF | .858 |
| 15 | .808 | 1.531 | 1.266 | .8125-20 UNEF | .984 |
| 17 | .909 | 1.531 | 1.391 | .9375-20 UNEF | 1.110 |
| 19 | 1.034 | 1.531 | 1.500 | 1.0625-18 UNEF | 1.234 |
| 21 | 1.159 | 1.625 | 1.625 | 1.1875-18 UNEF | 1.360 |
| 23 | 1.284 | 1.625 | 1.750 | 1.3125-18 UNEF | 1.484 |
| 25 | 1.409 | 1.625 | 1.875 | 1.4375-18 UNEF | 1.610 |

All dimensions for reference only.

# LJT07R (MS27468) — crimp
## jam nut receptacle

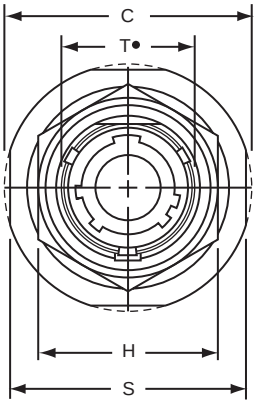


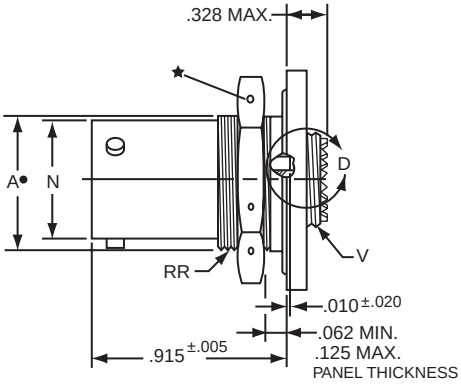


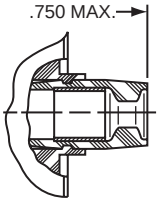


VIEW D ENLARGED
FOR COAXIAL USE ONLY

* LJT07RE-XX-XXX (MS27468E)
* LJT07RT-XX-XXX (MS27468T)

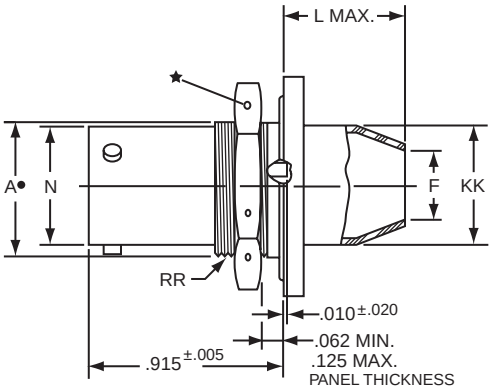


* LJT07RP-XX-XXX (MS27468P)

★ .059 Dia. Min. 3 lockwire holes.
Formed lockwire hole design (6 holes) is optional.

• "D" shaped mounting hole dimensions.

* To complete order number see page 53.

| Shell Size | A• +.000 –.010 | C Max. | F Dia. | H Hex +.017 –.016 | L Max. | N +.001 –.005 | S ±.016 | T• +.010 –.000 | V Thread Class 2A (Plated) | KK Dia. Max. | RR Thread Class 2A (Plated) |
|---|---|---|---|---|---|---|---|---|---|---|---|
| 9 | .669 | 1.199 | .444 | .875 | .625 | .572 | 1.062 | .697 | .4375-28 UNEF | .608 | .6875-24 UNEF |
| 11 | .769 | 1.386 | .558 | 1.000 | .625 | .700 | 1.250 | .822 | .5625-24 UNEF | .734 | .8125-20 UNEF |
| 13 | .955 | 1.511 | .683 | 1.188 | .625 | .850 | 1.375 | 1.007 | .6875-24 UNEF | .858 | 1.0000-20 UNEF |
| 15 | 1.084 | 1.636 | .808 | 1.312 | .625 | .975 | 1.500 | 1.134 | .8125-20 UNEF | .984 | 1.1250-18 UNEF |
| 17 | 1.208 | 1.761 | .909 | 1.438 | .625 | 1.100 | 1.625 | 1.259 | .9375-20 UNEF | 1.110 | 1.2500-18 UNEF |
| 19 | 1.333 | 1.949 | 1.034 | 1.562 | .656 | 1.207 | 1.812 | 1.384 | 1.0625-18 UNEF | 1.234 | 1.3750-18 UNEF |
| 21 | 1.459 | 2.073 | 1.159 | 1.688 | .750 | 1.332 | 1.938 | 1.507 | 1.1875-18 UNEF | 1.360 | 1.5000-18 UNEF |
| 23 | 1.580 | 2.199 | 1.284 | 1.812 | .750 | 1.457 | 2.062 | 1.634 | 1.3125-18 UNEF | 1.484 | 1.6250-18 UNEF |
| 25 | 1.709 | 2.323 | 1.409 | 2.000 | .750 | 1.582 | 2.188 | 1.759 | 1.4375-18 UNEF | 1.610 | 1.7500-18 UNS |

All dimensions for reference only.

# LJT00 (MS27469) — hermetic
## wall mounting receptacle

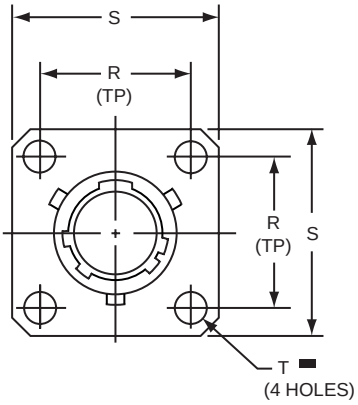


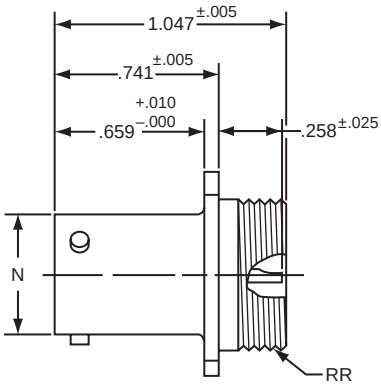


* LJT00H-XX-XXX
** LJT00Y-XX-XXX (MS27469YXXD)
*** LJTS00Y-XX-XXX (MS27469YXXE)

■ ⊕ .005 DIA Ⓜ

* To complete order number see page 53.
** Interfacial seal wafer; to complete order number see page 53.
*** High temperature version, interfacial seal wafer with stainless steel shell; to complete order number see page 53.

| Shell Size | N Dia. +.001 –.005 | R (TP) | S ±.016 | T Dia. ±.005 | RR Thread Class 2A |
|---|---|---|---|---|---|
| 9 | .572 | .719 | .938 | .128 | .6875-24 UNEF |
| 11 | .700 | .812 | 1.031 | .128 | .8125-20 UNEF |
| 13 | .850 | .906 | 1.125 | .128 | .9375-20 UNEF |
| 15 | .975 | .969 | 1.219 | .128 | 1.0625-18 UNEF |
| 17 | 1.100 | 1.062 | 1.312 | .128 | 1.1875-18 UNEF |
| 19 | 1.207 | 1.156 | 1.438 | .128 | 1.3125-18 UNEF |
| 21 | 1.332 | 1.250 | 1.562 | .128 | 1.4375-18 UNEF |
| 23 | 1.457 | 1.375 | 1.688 | .147 | 1.5625-18 UNEF |
| 25 | 1.582 | 1.500 | 1.812 | .147 | 1.6875-18 UNEF |

All dimensions for reference only.

# LJT07 (MS27470) — hermetic
## jam nut receptacle

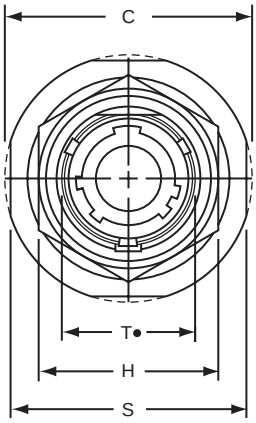


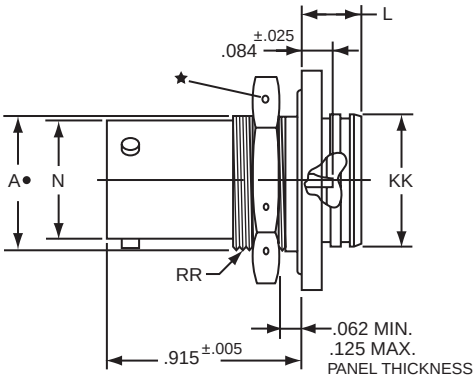


* LJT07H-XX-XXX
** LJT07Y-XX-XXX (MS27470YXXD)
*** LJTS07Y-XX-XXX (MS27470YXXE)

★ .059 Dia. Min. 3 lockwire holes.
Formed lockwire hole design (6 holes) is optional.
• "D" shaped mounting hole dimensions.
* To complete order number see page 53.
** Interfacial seal wafer; to complete order number see page 53.
*** High temperature version, interfacial seal wafer with stainless steel shell, to complete order number see page 53.

| Shell Size | A• +.000 –.010 | C Max. | H Hex +.017 –.016 | L Max | N +.000 –.005 | S ±.016 | T• +.010 –.000 | KK +.011 –.000 | RR Thread Class 2A (Plated) |
|---|---|---|---|---|---|---|---|---|---|
| 9 | .669 | 1.199 | .875 | .297 | .572 | 1.062 | .697 | .642 | .6875-24 UNEF |
| 11 | .769 | 1.386 | 1.000 | .297 | .700 | 1.250 | .822 | .766 | .8125-20 UNEF |
| 13 | .955 | 1.511 | 1.188 | .297 | .850 | 1.375 | 1.007 | .892 | 1.0000-20 UNEF |
| 15 | 1.084 | 1.636 | 1.312 | .297 | .975 | 1.500 | 1.134 | 1.018 | 1.1250-18 UNEF |
| 17 | 1.208 | 1.761 | 1.438 | .297 | 1.100 | 1.625 | 1.259 | 1.142 | 1.2500-18 UNEF |
| 19 | 1.333 | 1.949 | 1.562 | .328 | 1.207 | 1.812 | 1.384 | 1.268 | 1.3750-18 UNEF |
| 21 | 1.459 | 2.073 | 1.688 | .328 | 1.332 | 1.938 | 1.507 | 1.392 | 1.5000-18 UNEF |
| 23 | 1.580 | 2.199 | 1.812 | .328 | 1.457 | 2.062 | 1.634 | 1.518 | 1.6250-18 UNEF |
| 25 | 1.709 | 2.328 | 2.000 | .328 | 1.582 | 2.188 | 1.759 | 1.642 | 1.7500-18 UNS |

All dimensions for reference only.

# LJTI (MS27471) — hermetic
## solder mounting receptacle

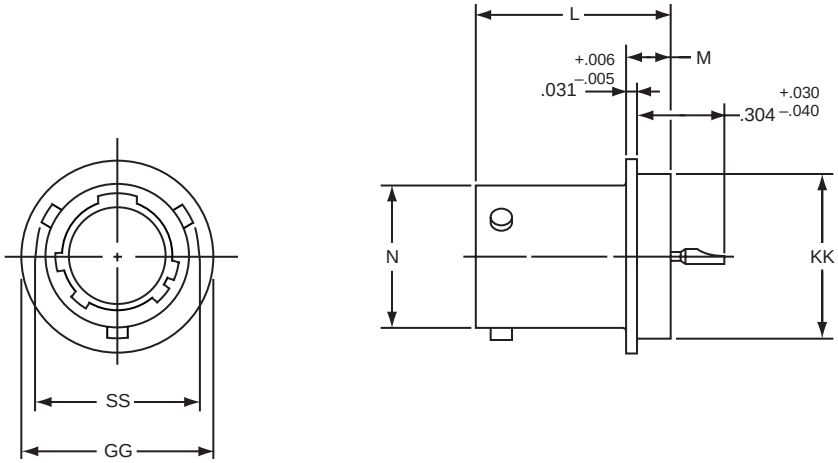


* LJTIH-XX-XXX
** LJTIY-XX-XXX (MS27471YXXD)
*** LJTSIY-XX-XXX (MS27471YXXE)

* To complete order number see page 49.
** Interfacial seal wafer; to complete order number see page 49.
*** High temperature version, interfacial seal wafer with stainless steel shell; to complete order nunmber see page 49.

| Shell Size | N Dia. +.001 –.005 | SS Dia. +.000 –.016 | L +.011 –.000 | M +.006 –.005 | GG Dia. +.011 –.010 | KK Dia. +.001 –.005 |
|---|---|---|---|---|---|---|
| 9 | .572 | .662 | .789 | .125 | .750 | .672 |
| 11 | .700 | .810 | .789 | .125 | .844 | .781 |
| 13 | .850 | .960 | .789 | .125 | .969 | .906 |
| 15 | .975 | 1.085 | .789 | .125 | 1.094 | 1.031 |
| 17 | 1.100 | 1.210 | .789 | .125 | 1.218 | 1.156 |
| 19 | 1.207 | 1.317 | .789 | .125 | 1.312 | 1.250 |
| 21 | 1.332 | 1.442 | .789 | .125 | 1.438 | 1.375 |
| 23 | 1.457 | 1.567 | .821 | .156 | 1.563 | 1.500 |
| 25 | 1.582 | 1.692 | .821 | .156 | 1.688 | 1.625 |

All dimensions for reference only.
Weld mounting hermetic receptacle also available. Consult Amphenol, Sidney, NY for availability and dimensions.

# LJT Breakaway Fail Safe
## quick-disconnect with an axial pull of lanyard

**Amphenol LJT Breakaway Fail Safe Connectors provide unequalled performance in environments requiring instant disengagement.**

Designed to provide quick disconnect of a connector plug and receptacle with an axial pull on the lanyard, the "Breakaway" Fail Safe connector family offers a wide range of electrical and mechanical features:

- Instant decoupling and damage free separation
- Completely intermateable with standard LJT receptacles
- Inventory support commonality through the use of standard insert arrangements and contacts

Breakaway un-mating is initiated by applying a pull force to the lanyard which causes the operating sleeve on the plug to move away from the receptacle. Coupling segments on the plug then move away from the mating receptacle while expanding, thus releasing the receptacle. After completion of the un-mating sequence, spring compression returns the sleeve and segments to their original positions. Un-mating of the plug may also be accomplished by normal rotation of the coupling ring without affecting the breakaway capability.

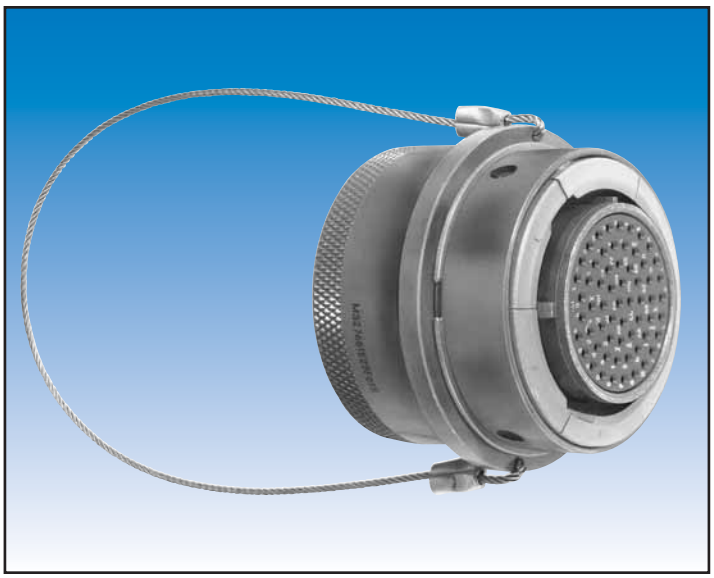

**The LJT Breakaway Fail Safe connector features which provide EMI/EMP shielding in excess of MIL-DTL-38999 Series I requirements:**

- Solid metal-to-metal coupling
- EMI grounding fingers
- Conductive finishes

In addition to standard Breakaway connectors, Amphenol also manufactures custom breakaway connectors including those with:

- Increased pull-force capability
- Custom lanyard lengths and backshells
- Low force separation capabilities
- Low insertion/separation force contacts
- Non-cadmium finishes
- Custom JT Series Breakaway designs have been developed for special applications; however the LJT Series is recommended over the JT Series for the quick-disconnect breakaway style.

Contact Amphenol Aerospace for more information on breakaway, quick-disconnect connectors. Other Amphenol cylindrical families (MIL-DTL-38999 Series III, MIL-C-26482, MIL-C-83723) also offer breakaway quick-disconnect connectors.

# LJT Fail Safe 88-5388/91-5388 (MS27661)
## lanyard release plug

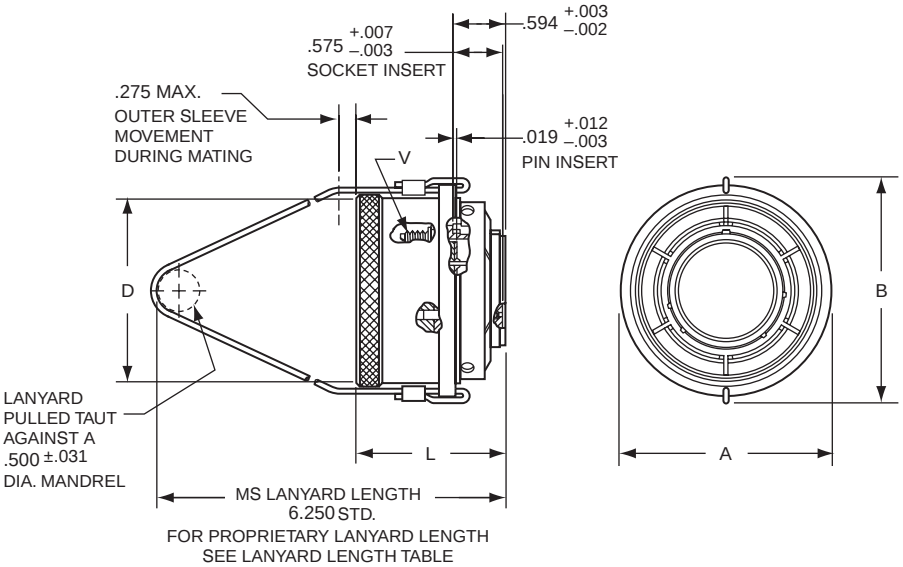


* To complete order number see page 40-41.

| Shell Size | A Dia. Max. | B Max. | D Max. Accessory Dia. | L Max. | V Thread UNEF Class 2A (Plated) |
|---|---|---|---|---|---|
| 11 | 1.393 | 1.797 | .740 | 1.703 | .5625-24 |
| 13 | 1.558 | 1.969 | .926 | 1.703 | .6875-24 |
| 15 | 1.669 | 2.078 | 1.051 | 1.703 | .8125-20 |
| 17 | 1.797 | 2.203 | 1.176 | 1.703 | .9375-20 |
| 19 | 1.926 | 2.323 | 1.300 | 1.703 | 1.0625-18 |
| 21 | 2.054 | 2.469 | 1.426 | 1.703 | 1.1875-18 |
| 23 | 2.183 | 2.594 | 1.551 | 1.703 | 1.3125-18 |
| 25 | 2.293 | 2.703 | 1.676 | 1.766 | 1.4375-18 |

All dimensions for reference only.

# LJT Breakaway Fail Safe
## lanyard release plug insert availability, how to order

### INSERT AVAILABILITY

| Insert Arrangement | Service Rating | Total Contacts | Contact Size 22D | 20 | 16 | 12 | 12 Coax | 8 Coax* | 8 Twinax |
|---|---|---|---|---|---|---|---|---|---|
| 11-2 | I | 2 | | | 2 | | | | |
| 11-35 | M | 13 | 13 | | | | | | |
| 11-98 | I | 6 | | 6 | | | | | |
| 13-4 | I | 4 | | | 4 | | | | |
| 13-8 | I | 8 | | 8 | | | | | |
| 13-35 | M | 22 | 22 | | | | | | |
| 13-98 | I | 10 | | 10 | | | | | |
| 15-5 | II | 5 | | | 5 | | | | |
| 15-15 | I | 15 | | 14 | 1 | | | | |
| 15-18 | I | 18 | | 18 | | | | | |
| 15-19 | I | 19 | | 19 | | | | | |
| 15-35 | M | 37 | 37 | | | | | | |
| 15-97 | I | 12 | | 8 | 4 | | | | |
| 17-6 | I | 6 | | | | 6 | | | |
| 17-8 | II | 8 | | | 8 | | | | |
| 17-26 | I | 26 | | 26 | | | | | |
| 17-35 | M | 55 | 55 | | | | | | |
| 17-99 | I | 23 | | 21 | 2 | | | | |
| 19-11 | II | 11 | | | 11 | | | | |
| 19-32 | I | 32 | | 32 | | | | | |
| 19-35 | M | 66 | 66 | | | | | | |
| 21-11 | I | 11 | | | | 11 | | | |
| 21-16 | II | 16 | | | 16 | | | | |
| 21-35 | M | 79 | 79 | | | | | | |
| 21-39 | I | 39 | | 37 | 2 | | | | |
| 21-41 | I | 41 | | 41 | | | | | |
| 23-21 | II | 21 | | | 21 | | | | |
| 23-35 | M | 100 | 100 | | | | | | |
| 23-53 | I | 53 | | 53 | | | | | |
| 23-54 | M | 53 | 40 | | 9 | 4 | | | |
| 23-55 | I | 55 | | 55 | | | | | |
| 25-4 | I | 56 | | 48 | 8 | | | | |
| 25-19 | I | 19 | | | | 19 | | | |
| 25-20 | N | 30 | | 10 | 13 | | 4 | | 3 |
| 25-24 | I | 24 | | | 12 | 12 | | | |
| 25-29 | I | 29 | | | 29 | | | | |
| 25-35 | M | 128 | 128 | | | | | | |
| 25-43 | I | 43 | | 23 | 20 | | | | |
| 25-46 | I | 46 | | 40 | 4 | | | 2* | |
| 25-61 | I | 61 | | 61 | | | | | |

| LJT Lanyard Separation Forces | | |
|---|---|---|
| Shell Size | Straight Pull (lbs. max.) | 15 Degree Pull (lbs. max.) |
| 11<br>13<br>15 | 45 | 55 |
| 17<br>19<br>21<br>23<br>25 | 90 | 100 |

* For RG 180/U and RG 195/U cables only. (Check Amphenol Aerospace, Sidney, NY for other cable applications.

For availability of other insert arrangements and accessories consult Amphenol Aerospace.

### TABLE I
### INSERT ARRANGEMENT CODE

| Basic Part Number | MIL-DTL-38999 Insert Arrangement |
|---|---|
| 88/91-538808 | 11-2 |
| 06 | 11-35 |
| 07 | 11-98 |
| 10 | 13-4 |
| 11 | 13-8 |
| 13 | 13-98 |
| 14 | 13-35 |
| 18 | 15-5 |
| 23 | 15-15 |
| 22 | 15-18 |
| 19 | 15-19 |
| 20 | 15-35 |
| 27 | 17-6 |
| 28 | 17-8 |
| 29 | 17-26 |
| 30 | 17-35 |
| 31 | 17-99 |
| 37 | 19-11 |
| 39 | 19-32 |
| 40 | 19-35 |
| 47 | 21-11 |
| 48 | 21-16 |
| 49 | 21-35 |
| 50 | 21-41 |
| 51 | 21-39 |
| 57 | 23-21 |
| 58 | 23-35 |
| 59 | 23-53 |
| 61 | 23-54 |
| 60 | 23-55 |
| 66 | 25-19 |
| 74 | 25-20 |
| 67 | 25-29 |
| 68 | 25-35 |
| 69 | 25-43 |
| 70 | 25-61 |
| 71 | 25-4 |
| 72 | 25-24 |

### TABLE II
### LANYARD LENGTH CODES

| Lanyard Length (in.) ± .250 | MS | Proprietary Code |
|---|---|---|
| 4.000 | No Code Std. Length 6.250 | 40 |
| 4.250 | | 41 |
| 4.500 | | 42 |
| 4.750 | | 43 |
| 5.000 | | 50 |
| 5.250 | | 51 |
| 5.500 | | 52 |
| 5.750 | | 53 |
| 6.000 | | 60 |
| 6.250 | | 61 |
| 6.500 | | 62 |
| 6.750 | | 63 |
| 7.000 | | 70 |
| 7.250 | | 71 |
| 7.500 | | 72 |
| 7.750 | | 73 |
| 8.000 | | 80 |
| 8.250 | | 81 |
| 8.500 | | 82 |
| 8.750 | | 83 |
| 9.000 | | 90 |
| 9.250 | | 91 |
| 9.500 | | 92 |
| 9.750 | | 93 |

# LJT Breakaway Fail Safe
## lanyard release plug
## how to order, cont.

### HOW TO ORDER - BY MILITARY PART NUMBER FAIL SAFE MS27661

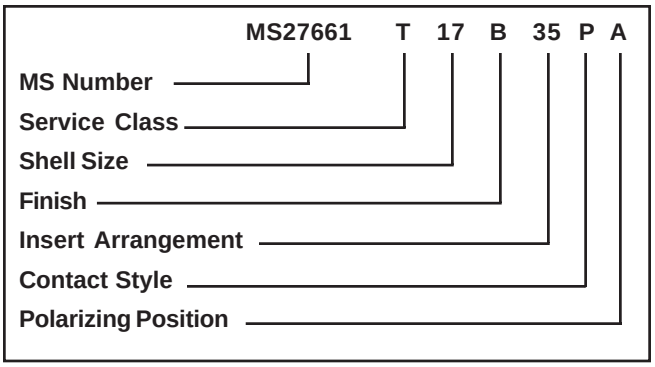


**MS Number**

MS Number designates MIL-DTL-38999, Series I LJT Lanyard Release Plug

**Service Class**

E for environmental crimp applications (inactive for new design)
T for environmental crimp applications with serrations on rear threads of shell

**Shell Size**

MIL-DTL-38999, sizes 11 through 25

**Finish**

B designates corrosion resistant olive drab cadmium plated aluminum, 500 hour extended salt spray, EMI shielding effectiveness –50dB @ 10 GHz specification min., 175°C
F designates electroless nickel plated aluminum, 48 hour salt spray, EMI shielding effectiveness –65dB @ 10 GHz500 specification min., 200°C
These are standard finishes. Consult Amphenol Aerospace for variations.

**Insert Arrangement**

MIL-DTL-38999, see insert identification chart on page 40.

**Contact Style**

P designates Lanyard Release plug with pin contacts
S designates Lanyard Release plug with socket contacts

**Polarizing Postion**

For alternate positions of connector (to prevent cross-mating) see LJT key/keyway rotation description on page 5. (No letter is required for normal).

### HOW TO ORDER - BY PROPRIETARY PART NUMBER FAIL SAFE 88-5388 OR 91-5388

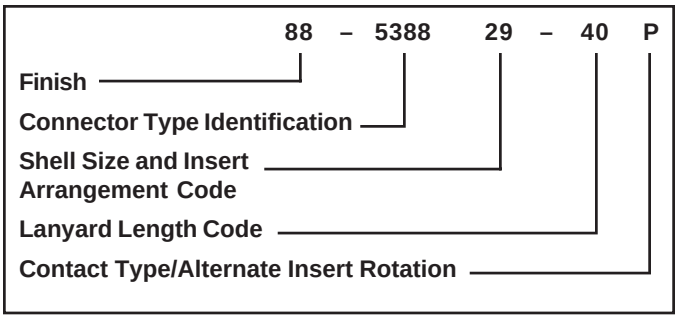


**Finish**

88 designates corrosion resistant olive drab cadmium plate over nickel, 500 hour extended salt spray, EMI –50dB @ 10 GHz specification min., 175°C

91 designates electroless nickel plated aluminum, optimum EMI shielding effectiveness –65dB @ 10 GHz specification min., 48 hour salt spray, 200°C
These are standard finishes. Consult Amphenol Aerospace, Sidney, NY for variations.

**Connector Type Identification**

88/91-5388 designates MIL-DTL-38999, Series I LJT Lanyard Release Plug

**Shell Size and Insert Arrangement Code**

Shell sizes are MIL-DTL-38999, Series III from 11 thru 25. The basic part number selected specifies the insert arrangement. See Table I (page 40) for coded part number that correlates to insert arrangement.

**Lanyard Length Code**

See Table II (page 40) for lanyard length code number.

**Contact Type/Alternate Rotations**

P designates pin, S designates socket for normal positioning of contacts. When an alternate position of the connector is required to prevent cross-mating, a different letter (other than P or S) is used. See alternate positioning for LJT on page 5, then convert to Amphenol proprietary coding by the following chart.

| Pin Contacts | | Socket Contacts | |
|---|---|---|---|
| MS Letter | Amphenol Letter | MS Letter | Amphenol Letter |
| P | P (normal) | S | S (normal) |
| PA | E | SA | F |
| PB | R | SB | T |
| PC | W | SC | X |
| PD | Y | SD | Z |

# LJT — accessories
## plug protection cap

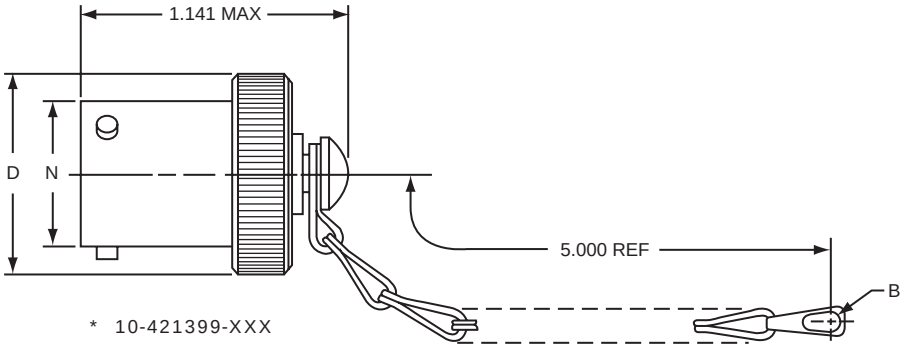


* 10-421399-XXX

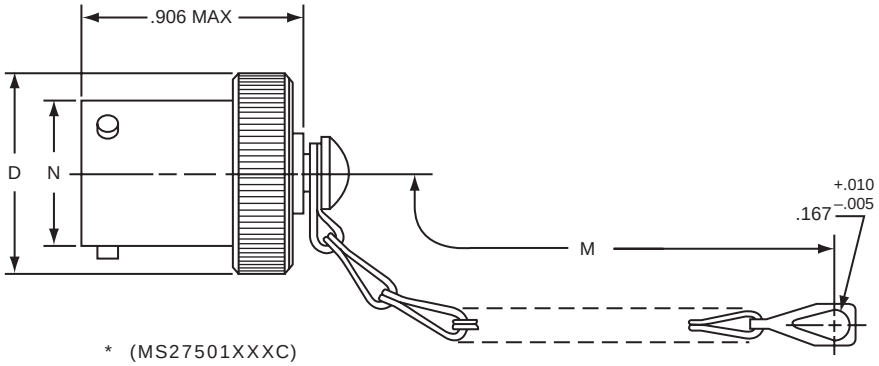


* (MS27501XXXC)

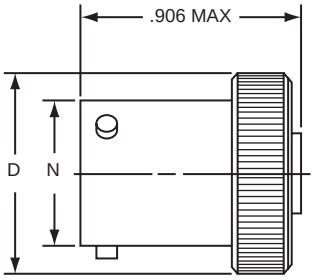


* 10-275196-XXX (MS27501)

* To complete order number, add shell size and suffix number.
For example, shell size 11 with cadmium plate, nickel base would be 10-421399-117, MS27501A11C or MS20048A11.

| Shell Size | B Dia. Ref | D Dia. Max | M ±.250 | N Dia. +.001 –.005 |
|---|---|---|---|---|
| 9 | .180 | .812 | 3.000 | .572 |
| 11 | .180 | .938 | 3.000 | .700 |
| 13 | .180 | 1.062 | 3.500 | .850 |
| 15 | .180 | 1.188 | 3.500 | .975 |
| 17 | .180 | 1.312 | 3.500 | 1.100 |
| 19 | .209 | 1.438 | 3.500 | 1.207 |
| 21 | .209 | 1.562 | 4.000 | 1.332 |
| 23 | .209 | 1.688 | 4.000 | 1.457 |
| 25 | .209 | 1.812 | 4.000 | 1.582 |

All dimensions for reference only.

| Finish | 10-Number Suffix | MS Number Suffix with chain | MS Number Suffix without chain |
|---|---|---|---|
| Chromate treat | -XX0 | | |
| Anodic coating | -XX5 | | |
| Cadmium plate nickel base | -XX7 | AXXC | AXX |
| Olive drab, cadmium, nickel base | -XX9 | BXXC | BXX |
| Electroless nickel | | -XXG | FXXC |

FXX

# LJT — accessories
## receptacle protection cap

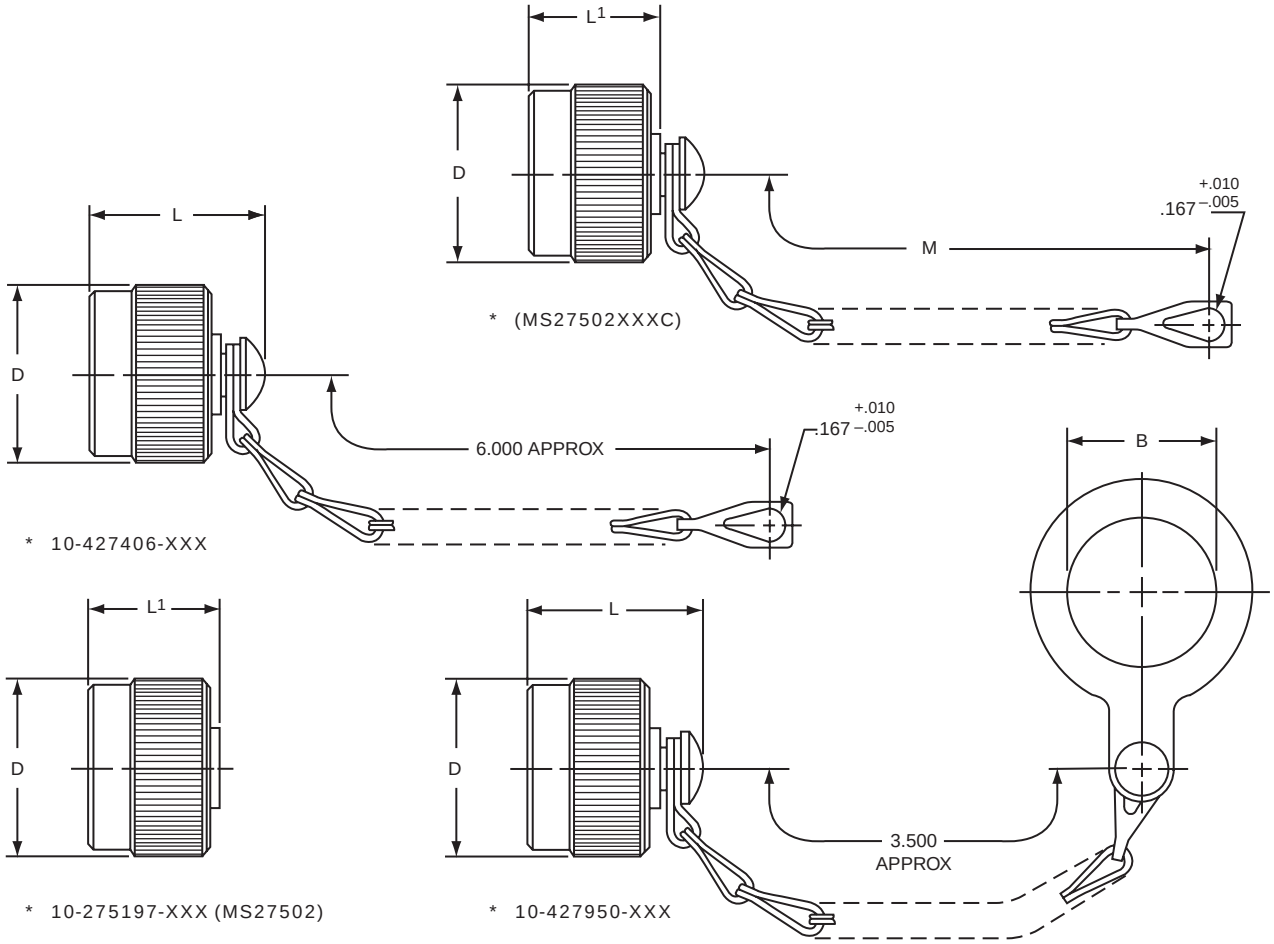


*For MS stamping identification, accessories must be ordered by MS part number.*
*If ordered by 10- part number, they will be stamped with said number.*

* To complete order number, add shell size and suffix number.
For example, shell size 11 with cadmium plate, nickel base would be 10-427406-117, MS27502A11C or MS20047A11.

| Shell Size | B Dia. +.010 –.000 | D Dia. Max | L Max. | L¹ Max. | M ±.250 |
|---|---|---|---|---|---|
| 9 | .703 | .844 | 1.070 | .844 | 3.000 |
| 11 | .844 | .969 | 1.070 | .844 | 3.000 |
| 13 | 1.016 | 1.125 | 1.070 | .844 | 3.500 |
| 15 | 1.141 | 1.250 | 1.070 | .844 | 3.500 |
| 17 | 1.266 | 1.406 | 1.070 | .844 | 3.500 |
| 19 | 1.391 | 1.500 | 1.070 | .844 | 3.500 |
| 21 | 1.516 | 1.625 | 1.070 | .844 | 4.000 |
| 23 | 1.641 | 1.750 | 1.070 | .844 | 4.000 |
| 25 | 1.766 | 1.875 | 1.089 | .875 | 4.000 |

All dimensions for reference only.

| Finish | 10- Number Suffix | MS Number Suffix with chain | MS Number Suffix without chain |
|---|---|---|---|
| Chromate treat | -XX0 | | |
| Anodic coating | -XX5 | CXXC | CXX |
| Cadmium plate nickel base | -XX7 | AXXC | AXX |
| Olive drab, cadmium, nickel base | -XX9 | BXXC | BXX |
| Electroless nickel | | -XXG | FXXC |

FXX

# LJT — accessories
## strain relief (solder type)

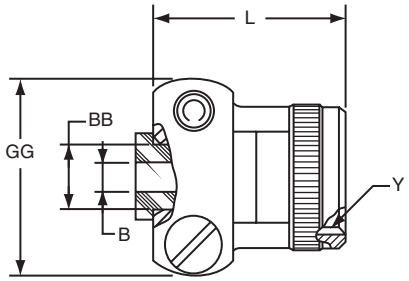


* 10-436792-XXX

*For military type cable clamp see MS27506 or M85049/49 on page 28.*

* To complete order number, add shell size and suffix number.

| Finish | 10-Number Suffix |
|---|---|
| Chromate treat | -XX0 |
| Anodic coating | -XX5 |
| Cadmium plate nickel base | -XX7 |
| Olive drab, cadmium, nickel base | -XX9 |
| Electroless nickel | -XXG |

For example: Shell size 11 with cadmium plate, nickel base would be 10-436792-117.

| Shell Size | B Dia. +.010 –.025 | L Max. | Y Thread Class 2B (Plated) | GG Max. | BB Dia. +.000 –.011 |
|---|---|---|---|---|---|
| 9 | .125 | .859 | .4375-28 UNEF | .775 | .250 |
| 11 | .188 | .859 | .5625-24 UNEF | .837 | .312 |
| 13 | .312 | .859 | .6875-24 UNEF | .963 | .438 |
| 15 | .375 | 1.109 | .8125-20 UNEF | 1.087 | .562 |
| 17 | .500 | 1.109 | .9375-20 UNEF | 1.150 | .625 |
| 19 | .625 | 1.109 | 1.0625-18 UNEF | 1.400 | .750 |
| 21 | .625 | 1.109 | 1.1875-18 UNEF | 1.400 | .750 |
| 23 | .750 | 1.234 | 1.3125-18 UNEF | 1.587 | .938 |
| 25 | .800 | 1.234 | 1.4375-18 UNEF | 1.681 | 1.000 |

All dimensions for reference only.

# JT/LJT – crimp contacts, printed circuit board, wire wrap contacts (socket)

## JT/LJT CRIMP CONTACTS

| Contact Size | JT/LJT Pins MS No. | JT Sockets MS No. | LJT Sockets MS No. |
|---|---|---|---|
| 8 (Coax)* | M39029/60-367 | NA | M39029/59-366 |
| 8 (Twinax) | M39029/90-529** | NA | M39029/91-530 |
| 10 (Power) | M39029/58-528 | NA | M39029/56-527 |
| 12 | M39029/58-365 | M39029/57-359 | M39029/56-353 |
| 16 | M39029/58-364 | M39029/57-358 | M39029/56-352 |
| 20 | M39029/58-363 | M39029/57-357 | M39029/56-351 |
| 22 | M39029/58-362 | M39029/57-356 | M39029/56-350 |
| 22M | M39029/58-361 | M39029/57-355 | M39029/56-349 |
| 22D | M39029/58-360 | M39029/57-354 | M39029/56-348 |

## PRINTED CIRCUIT BOARD/WIRE WRAP CONTACTS
## JT SOCKETS

| PCB Contacts | Contact Stickout Max/Min (See Illustration) | | | | | | | |
|---|---|---|---|---|---|---|---|---|
| | Size | Tail Dia. | MS27472 | MS27497 | MS27499 | MS27508 | MS27473 | MS27474 |
| 10-407553-15 | 22M | .019 | .379<br>.305 | .379<br>.305 | .577<br>.506 | .577<br>.506 | .379<br>.305 | .379<br>.305 |
| 10-407553-45 | 22M | .019 | .156<br>.082 | .156<br>.082 | .354<br>.283 | .354<br>.283 | .156<br>.082 | .156<br>.082 |
| 10-407553-55 | 22M | .019 | .268<br>.194 | .268<br>.194 | .466<br>.395 | .466<br>.395 | .268<br>.194 | .268<br>.194 |
| 10-407553-85 | 22M | .019 | .104<br>.035 | .104<br>.035 | .302<br>.236 | .302<br>.236 | .104<br>.035 | .104<br>.035 |
| 10-497641-25 | 20 | .019 | .257<br>.204 | .257<br>.204 | .455<br>.406 | .455<br>.406 | .257<br>.204 | .257<br>.204 |
| 10-497641-45 | 20 | .019 | NS | NS | .192<br>.143 | .192<br>.143 | NS | NS |
| 10-497631-25 | 16 | .062 | .392<br>.339 | .392<br>.339 | .590<br>.541 | .590<br>.541 | .392<br>.339 | .392<br>.339 |
| Wire Wrap Contacts | | Tail Square | | | | | | |
| 10-407573-15 | 22D | .025 | .058<br>NS | .058<br>NS | .256<br>.194 | .256<br>.194 | .058<br>NS | .058<br>NS |
| 10-407573-35 | 22D | .025 | .199<br>.130 | .199<br>.130 | .397<br>.331 | .397<br>.331 | .199<br>.130 | .199<br>.130 |
| 10-407573-65 | 22D | .025 | .364<br>.299 | .364<br>.299 | .562<br>.500 | .562<br>.500 | .364<br>.299 | .364<br>.299 |

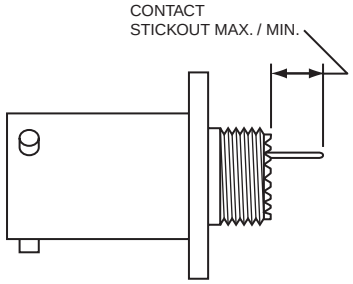


All dimensions for reference only. Consult Amphenol, Sidney, NY for specific contact contour stickout data. NS designates No Stickout.

See also catalog 12-170, Amphenol Cylindrical Connectors for PCB Applications. This catalog provides the most commonly used insert pattern pin-out drawings which have been tooled for the purpose of attaching cylindrical connectors to printed circuit boards.

Above part numbers include standard finish designation - gold plating over suitable underplate in accordance with MIL-C-39029. For other finish variations, consult Amphenol, Sidney, NY.

Note: 22M and 22D contacts are interchangeable.

NS - No Stickout

* For use with RG180B/U and RG195A/U cable. For other size 8 coax or optional sizes 12 and 18 coax contacts available for use in JT/LJT connectors, see catalog 12-030, or consult Amphenol, Sidney, NY.

** For use with 17/M176-00002 cable.

† Optional design - see slash sheet MS39029

For further contact options available for use in JT/LJT connectors (thermocouple, fiber optics), consult Amphenol, Sidney, NY.

# LJT
# wire wrap contacts (sockets)

## PRINTED CIRCUIT BOARD/WIRE WRAP CONTACTS
## LJT SOCKETS

| PCB Contacts | Size | Tail Dia | MS27466 LJT00RT | MS27656 LJTPQ00RT | MS27496 LJT02RE | MS27505 LJTP02 | MS27467 LJT06RE | MS27368 LJT07RE (9-17) | MS27368 LJT07RE (19-25) |
|---|---|---|---|---|---|---|---|---|---|
| | | | Contact Stickout Max/Min (See Illustration) | | | | | | |
| 10-497623-15 | 22D | .019 | .328<br>.263 | .313<br>.248 | .532<br>.467 | .532<br>.466 | .328<br>.263 | .307<br>.242 | .285<br>.225 |
| 10-497623-25 | 22D | .019 | .905<br>.840 | .890<br>.825 | 1.109<br>1.044 | 1.109<br>1.043 | .905<br>.840 | .884<br>.819 | .862<br>.802 |
| 10-497623-35 | 22D | .019 | .385<br>.320 | .370<br>.305 | .589<br>.524 | .589<br>.523 | .385<br>.320 | .364<br>.299 | .342<br>.282 |
| 10-497623-45 | 22D | .019 | .245<br>.180 | .230<br>.165 | .449<br>.384 | .449<br>.383 | .245<br>.180 | .224<br>.159 | .202<br>.142 |
| 10-497623-75 | 22D | .019 | .183<br>.118 | .168<br>.103 | .387<br>.322 | .387<br>.321 | .183<br>.118 | .162<br>.097 | .140<br>.080 |
| 10-497623-105 | 22D | .019 | .065<br>.000 | .050<br>NS | .269<br>.204 | .269<br>.203 | .065<br>.000 | .044<br>NS | .022<br>NS |
| 10-497623-145 | 22D | .019 | .646<br>.576 | .631<br>.561 | .850<br>.780 | .850<br>.779 | .646<br>.576 | .625<br>.555 | .603<br>.538 |
| 10-497623-155 | 22D | .019 | .460<br>.395 | .445<br>.380 | .664<br>.599 | .664<br>.598 | .460<br>.395 | .439<br>.374 | .417<br>.357 |
| 10-497643-15 | 20 | .019 | .385<br>.339 | .370<br>.316 | .589<br>.535 | .589<br>.536 | .385<br>.331 | .364<br>.310 | .342<br>.293 |
| 10-497643-25 | 20 | .019 | .250<br>.204 | .235<br>.181 | .454<br>.400 | .454<br>.401 | .250<br>.196 | .229<br>.175 | .207<br>.158 |
| 10-497643-35 | 20 | .019 | .592<br>.546 | .577<br>.523 | .796<br>.742 | .796<br>.743 | .592<br>.538 | .571<br>.517 | .549<br>.500 |
| 10-497643-45 | 20 | .019 | .175<br>.129 | .160<br>.106 | .379<br>.325 | .379<br>.326 | .175<br>.121 | .154<br>.100 | .132<br>.083 |
| 10-497650-15 | 16 | .040 | .292<br>.246 | .277<br>.223 | .496<br>.442 | .496<br>.443 | .292<br>.238 | .271<br>.217 | .249<br>.200 |
| Wire Wrap Contacts | | Tail Square | | | | | | | |
| 10-497577-15 | 22D | .025 | .192<br>.127 | .177<br>.112 | .396<br>.331 | .396<br>.330 | .192<br>.127 | .171<br>.106 | .149<br>.089 |
| 10-497577-25 | 22D | .025 | .039<br>NS | .024<br>NS | .243<br>.178 | .243<br>.177 | .039<br>NS | .018<br>NS | NS<br>NS |
| 10-497577-35 | 22D | .025 | .238<br>.173 | .223<br>.158 | .442<br>.377 | .442<br>.376 | .238<br>.173 | .217<br>.152 | .195<br>.135 |
| 10-497577-55 | 22D | .025 | .603<br>.538 | .588<br>.523 | .807<br>.742 | .807<br>.741 | .603<br>.538 | .582<br>.517 | .560<br>.500 |
| 10-497621-15 | 20 | .025 | .188<br>.146 | .173<br>.123 | .392<br>.342 | .392<br>.343 | .188<br>.138 | .167<br>.117 | .145<br>.100 |
| 10-497621-25 | 20 | .025 | .642<br>.600 | .627<br>.577 | .846<br>.796 | .846<br>.797 | .642<br>.592 | .621<br>.571 | .599<br>.554 |
| 10-497621-35 | 20 | .025 | .345<br>.303 | .330<br>.280 | .549<br>.499 | .549<br>.500 | .345<br>.295 | .324<br>.274 | .302<br>.257 |

Above part numbers include standard finish designation – gold plating over suitable underplate in accordance with MIL-C-39029. For other finish variations, consult Amphenol, Sidney, NY.

Note: 22M and 22D contacts are interchangeable.

NS – No Stickout

For other contact options available for use in LJT connectors (thermocouple, fiber optic), consult Amphenol, Sidney, NY.

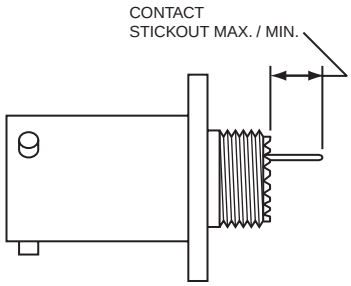


All dimensions for reference only. Consult Amphenol, Sidney, NY for specific contact contour stickout data. NS designates No Stickout.

See also catalog 12-170, Amphenol Cylindrical Connectors for PCB Applications. This catalog provides the most commonly used insert pattern pin-out drawings which have been tooled for the purpose of attaching cylindrical connectors to printed circuit boards.

# JT/LJT — printed circuit board and wire wrap contacts (pins)

## PRINTED CIRCUIT BOARD/WIRE WRAP CONTACTS, JT/LJT PINS

| PCB Contacts | Size | Tail Dia | Contact Stickout Max/Min (See illustration page 42) | | | | | | | | | | | | |
|---|---|---|---|---|---|---|---|---|---|---|---|---|---|---|---|
| | | | MS27472 JT00RT | MS7466 LJT00RT | MS27497 JTPQ00RT | MS27656 LJTPQ00RT | MS27499 JT02RE | MS27496 LJT02RE | MS27508 JTP02RE | MS27505 LJTP02RE | MS27473 JT06RT | MS27467 LJT06RE | MS27474 JT07RT | MS27468 LJT07RE (9-17) | MS27468 LJT07RE (19-25) |
| 10-407552-15 | 22M | .019 | .379<br>.317 | .372<br>.317 | .379<br>.317 | .357<br>.302 | .577<br>.520 | .576<br>.521 | .577<br>.520 | .576<br>.520 | .379<br>.317 | .372<br>.317 | .379<br>.317 | .351<br>.296 | .329<br>.279 |
| 10-407552-55 | 22M | .019 | .268<br>.206 | .261<br>.206 | .268<br>.206 | .246<br>.191 | .466<br>.409 | .465<br>.410 | .466<br>.409 | .465<br>.409 | .268<br>.206 | .261<br>.206 | .268<br>.206 | .240<br>.185 | .218<br>.168 |
| 10-407552-85 | 22M | .019 | .104<br>.047 | .097<br>.047 | .104<br>.047 | .082<br>.032 | .302<br>.250 | .301<br>.251 | .302<br>.250 | .301<br>.250 | .104<br>.047 | .097<br>.047 | .104<br>.047 | .076<br>.026 | .054<br>.009 |
| 10-407552-95 | 22M | .019 | NS | NS | NS | NS | .105<br>.057 | .104<br>.058 | .105<br>.057 | .104<br>.057 | NS | NS | NS | NS | NS |
| 10-407552-115 | 22M | .019 | .042<br>NS | .035<br>NS | .042<br>NS | .020<br>NS | .240<br>.188 | .239<br>.189 | .240<br>.188 | .239<br>.188 | .042<br>NS | .035<br>NS | .042<br>NS | .014<br>NS | NS |
| 10-497640-15 | 20 | .019 | .392<br>.335 | .385<br>.335 | .392<br>.335 | .370<br>.320 | .590<br>.538 | .589<br>.539 | .590<br>.538 | .589<br>.538 | .392<br>.335 | .385<br>.335 | .392<br>.335 | .364<br>.314 | .342<br>.297 |
| 10-497640-25 | 20 | .019 | .257<br>.200 | .250<br>.200 | .257<br>.200 | .235<br>.185 | .455<br>.403 | .454<br>.404 | .455<br>.403 | .454<br>.403 | .257<br>.200 | .250<br>.200 | .257<br>.200 | .229<br>.179 | .207<br>.162 |
| 10-497640-45 | 20 | .019 | NS | NS | NS | NS | .192<br>.140 | .191<br>.141 | .192<br>.140 | .191<br>.140 | NS | NS | NS | NS | NS |
| 10-497640-65 | 20 | .019 | .182<br>.125 | .175<br>.125 | .182<br>.125 | .160<br>.110 | .380<br>.328 | .379<br>.329 | .380<br>.328 | .379<br>.328 | .182<br>.125 | .175<br>.125 | .182<br>.125 | .154<br>.104 | .132<br>.087 |
| 10-497596-15 | 20 | .025 | .102<br>.049 | .095<br>.049 | .102<br>.049 | .080<br>.034 | .300<br>.252 | .299<br>.253 | .300<br>.252 | .299<br>.252 | .102<br>.049 | .095<br>.049 | .102<br>.049 | .074<br>.028 | .052<br>.011 |
| 10-497596-25 | 20 | .025 | .192<br>.139 | .185<br>.139 | .192<br>.139 | .170<br>.124 | .390<br>.342 | .389<br>.343 | .390<br>.342 | .389<br>.342 | .192<br>.139 | .185<br>.139 | .192<br>.139 | .164<br>.118 | .142<br>.101 |
| 10-497596-35 | 20 | .025 | .273<br>.220 | .266<br>.220 | .273<br>.220 | .251<br>.205 | .471<br>.423 | .470<br>.424 | .471<br>.423 | .470<br>.423 | .273<br>.220 | .266<br>.220 | .273<br>.220 | .245<br>.199 | .223<br>.182 |
| 10-497596-55 | 20 | .025 | .390<br>.337 | .383<br>.337 | .390<br>.337 | .368<br>.322 | .588<br>.540 | .587<br>.541 | .588<br>.540 | .587<br>.540 | .390<br>.337 | .383<br>.337 | .390<br>.337 | .362<br>.316 | .340<br>.299 |
| 10-497695-15 | 16 | .040 | .299<br>.242 | .292<br>.242 | .299<br>.242 | .277<br>.227 | .497<br>.445 | .496<br>.446 | .497<br>.445 | .496<br>.445 | .299<br>.242 | .292<br>.242 | .299<br>.242 | .271<br>.221 | .249<br>.204 |
| 10-497630-25 | 16 | .062 | .392<br>.335 | .385<br>.335 | .392<br>.335 | .370<br>.320 | .590<br>.538 | .589<br>.539 | .590<br>.538 | .589<br>.538 | .392<br>.335 | .385<br>.335 | .392<br>.335 | .364<br>.314 | .342<br>.297 |
| 10-497630-35 | 16 | .062 | .104<br>.047 | .097<br>.047 | .104<br>.047 | .082<br>.032 | .302<br>.250 | .301<br>.251 | .302<br>.250 | .301<br>.250 | .104<br>.047 | .097<br>.047 | .104<br>.047 | .076<br>.026 | .054<br>.009 |
| 10-497630-45 | 16 | .062 | .152<br>.099 | .145<br>.099 | .152<br>.099 | .130<br>.084 | .350<br>.302 | .349<br>.303 | .350<br>.302 | .349<br>.302 | .152<br>.099 | .145<br>.099 | .152<br>.099 | .124<br>.078 | .102<br>.061 |
| 10-597502-15 | 12 | .081 | .272<br>.215 | .265<br>.215 | .272<br>.215 | .250<br>.200 | .470<br>.418 | .469<br>.410 | .470<br>.418 | .469<br>.418 | .272<br>.215 | .265<br>.215 | .272<br>.215 | .244<br>.194 | .222<br>.177 |
| Wire Wrap Contacts | | Tail Square | | | | | | | | | | | | | |
| 10-407572-15 | 22D | .025 | .058<br>.005 | .051<br>.005 | .058<br>.005 | .036<br>NS | .256<br>.208 | .255<br>.209 | .256<br>.208 | .255<br>.208 | .058<br>.005 | .051<br>.005 | .058<br>.005 | .030<br>NS | .008<br>NS |
| 10-407572-35 | 22D | .025 | .199<br>.142 | .192<br>.142 | .199<br>.142 | .177<br>.127 | .397<br>.345 | .396<br>.346 | .397<br>.345 | .396<br>.345 | .199<br>.142 | .192<br>.142 | .199<br>.142 | .171<br>.121 | .149<br>.104 |
| 10-407572-45 | 22D | .025 | .299<br>.242 | .292<br>.242 | .299<br>.242 | .277<br>.227 | .497<br>.445 | .496<br>.446 | .497<br>.445 | .496<br>.445 | .299<br>.242 | .292<br>.242 | .299<br>.242 | .271<br>.221 | .249<br>.204 |
| 10-407572-75 | 22D | .025 | .565<br>.512 | .558<br>.512 | .565<br>.512 | .543<br>.497 | .763<br>.715 | .762<br>.716 | .763<br>.715 | .762<br>.717 | .565<br>.512 | .558<br>.512 | .565<br>.512 | .537<br>.491 | .515<br>.474 |
| 10-407584-25 | 20 | .025 | .649<br>.596 | .642<br>.596 | .649<br>.596 | .627<br>.581 | .847<br>.799 | .846<br>.800 | .847<br>.799 | .846<br>.799 | .649<br>.596 | .642<br>.596 | .649<br>.596 | .621<br>.575 | .599<br>.558 |
| 10-407584-35 | 20 | .025 | .352<br>.299 | .345<br>.299 | .352<br>.299 | .330<br>.284 | .550<br>.502 | .549<br>.503 | .550<br>.502 | .549<br>.502 | .352<br>.299 | .345<br>.299 | .352<br>.299 | .324<br>.278 | .302<br>.261 |

Above part numbers include standard finish designation – gold plating over suitable underplate in accordance with MIL-C-39029.

For other finish variations, consult Amphenol, Sidney, N.Y.

Note: 22M and 22D contacts are interchangeable.

NS – No Stickout

For other contact options available for use in JT/LJT connectors, (thermocouple, fiber optic, high speed coax, twinax, triax, quadrax and differential twinax) consult Amphenol, Sidney, NY.

# JT/LJT – accessories
## universal "header assembly" for flex print or PC board mounting

### Mounts to all MIL-DTL-38999 and MIL-C-26482 Connectors

The use of connectors with printed circuit termination is rapidly gaining popularity due to the rise of high volume, vapor phase or wave solder manufacturing processes. Termination of this style of connector to flex print or a printed circuit board represents a major cost in the manufacturing process for users. When adding flex or printed circuit board assemblies to an expensive filter or filter/transient protection connector, the total cost of a failed solder joint, a bent pin, or an unanticipated electrical failure becomes prohibitive. The universal header assembly from Amphenol will provide for easy separation of the connector from the board on these occasions.

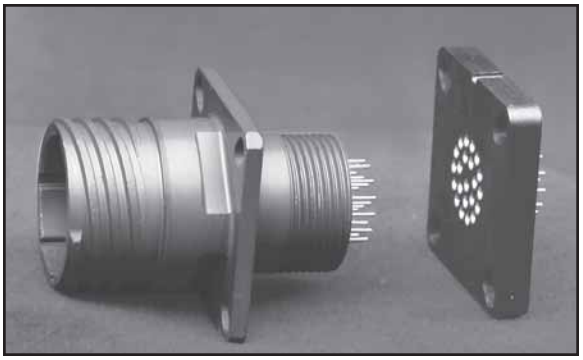

**Headers provide easy separation of the connector from the PC board.**

### Header Assemblies Provide Cost Savings

Incorporation of the header assembly provides the user with time and cost saving potentials. These header assemblies can be vapor phase or wave soldered to flex or printed circuit boards prior to the receipt of the EMI/EMP connector. Headers can be installed to standard connectors, allowing for electrical testing that would adversely affect the sensitive diodes, MOV's or capacitors in the EMI/EMP connectors. Expensive connector assemblies can be easily removed from and reattached to the header assembly as the manufacturing process dictates.

### Mounting Applications

Shell modifications are recommended, but are not necessary. The header assembly can be attached to connectors with standard flange placement or directly to the circuit board. The ideal application would involve either a single flange moved all the way to the rear of the connector or a double flange. Cinch nuts can be installed in either flange to allow easier mounting to the panel or the header assembly. The forward flange would mount the connector to the panel; the rear flange would be used to mount the header assembly. Various types of captivated or loose attaching screws can be utilized for unique applications.

Amphenol universal headers are slotted to allow mounting to all series of MIL-DTL-38999 or MIL-C-26482 connectors without special alterations. They are of similar dimension as the flange of the mounting connector and would be approximately .185 inches (4.70 mm) thick.

### Incorporates a Shorter Pin/Socket Contact

The heart of the header assembly is a short pin/socket contact. The tail of the contact would accommodate standard through-hole diameters and thickness of the flex or printed circuit board materials. The socket is imbedded in the molded material, making electrical engagement with the printed circuit tail of the connector.

### Cylindrical Configuration

- 3 PCB stickout dimensions are available.
- Size 22D contacts use .175 thick headers
- Size 16 to 20 contacts use .195 thick headers
- Consult Amphenol, Sidney NY for additional configurations.
- Headers for cylindrical connectors accommodate up to 128 pins. See pages 4-11 for JT/LJT mating connector contact layouts. Also see catalog 12-092 for MIL-DTL-38999, Series III mating contact layouts and catalog 12-070 for MIL-C-26482 mating contact layouts.

### Mounting to Rectangular ARINC Connectors

- Headers for ARINC connector arrangements accommodate up to 150 pins
- Consult Amphenol, Sidney, NY for ARINC configurations and detailed dimensions.

### Materials

- Body is molded from Torlon or PPS (Polyphenylene Sulfide)
- Electrical engagement areas of the header contact are plated with .00003 inches minimum of gold over .00005 inches minimum of nickel.

# JT/LJT – accessories
## universal “header assembly” for flex print or PC board mounting, cont.

The drawing below shows the standard universal adapter for use with MIL-DTL-38999 and MIL-C-26482 connectors. Consult Amphenol Aerospace, Sidney NY for drawings of headers for ARINC configurations.

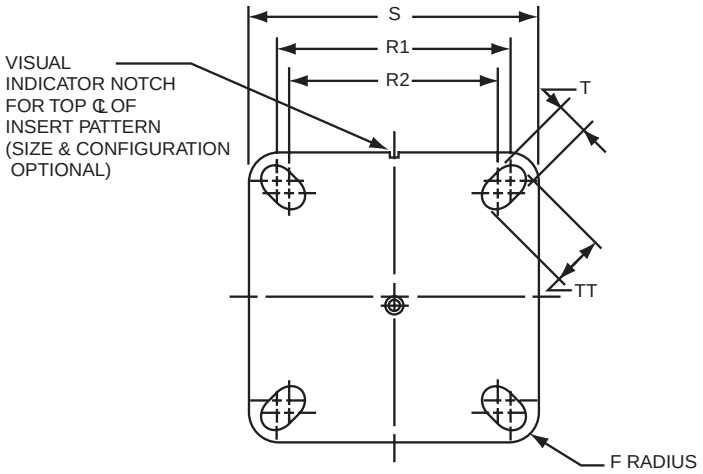


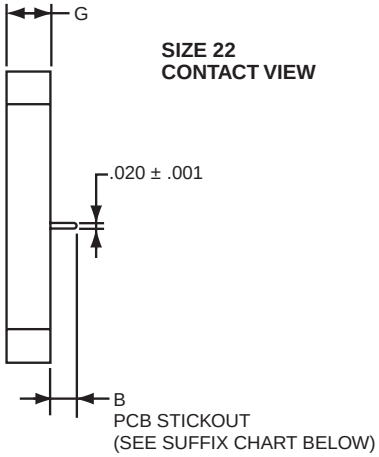


| Assembly Part Number | Shell Size | F Radius | G ± .005 | S ± .005 | T + .008 – .006 | R1 TP† | R2 TP† | TT + .008 – .006 |
|---|---|---|---|---|---|---|---|---|
| 21-904008-XX( ) | 8/9 | .094 | | .938 | .128 | .719 | .594 | .216 |
| 21-904010-XX( ) | 10/11 | .094 | | 1.031 | .128 | .812 | .719 | .194 |
| 21-904012-XX( ) | 12/13 | .094 | | 1.125 | .128 | .906 | .812 | .194 |
| 21-904014-XX( ) | 14/15 | .125 | | 1.219 | .128 | .969 | .906 | .173 |
| 21-904016-XX( ) | 16/17 | .125 | | 1.312 | .128 | 1.062 | .969 | .194 |
| 21-904018-XX( ) | 18/19 | .125 | | 1.438 | .128 | 1.156 | 1.062 | .194 |
| 21-904020-XX( ) | 20/21 | .125 | | 1.562 | .128 | 1.250 | 1.156 | .194 |
| 21-904022-XX( ) | 22/23 | .125 | | 1.688 | .154 | 1.375 | 1.250 | .242 |
| 21-904024-XX( ) | 24/25 | .125 | | 1.812 | .154 | 1.500 | 1.375 | .242 |

See Suffix Chart

Assemblies containing Size 22 contacts only: .175
Assemblies containing Size16 or 20 contacts: .195

† TP designates true position dimensioning.

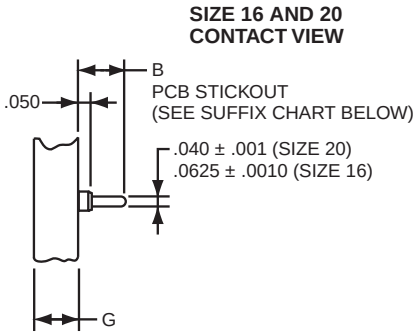


### HOW TO ORDER INFORMATION
**For Universal Adapter Used with MIL-DTL-38999 Connectors**

Use coded number as follows:

**21-9040 XX - XX X**

- Designates Amphenol Interface Adapter
- Shell size designation for MIL-DTL-38999 Series I, II. See Suffix chart.
- Arrangement number - See MIL-STD-1560 or MIL-STD-1669. See insert availability charts on pages 4-6.
- Contact PCB Stickout designation See Suffix chart.

Universal adapters are also used with MIL-DTL-38999 Series III and with MIL-C-26482, Series 1 and 2. For how to order information on adapters to be used with ARINC connectors, consult Amphenol, Sidney NY.

### ASSEMBLY NUMBER SUFFIX CHART

| Shell Size Designation* | Arrangement Number Suffix*** | Contact PCB Stickout** | |
|---|---|---|---|
| | | Suffix | B ± .015 Stickout |
| 08 | Insert Arrangement Suffix from MIL-STD-1560 or MIL-STD-1669 | 1 | .120 |
| 10 | | 2 | .185 |
| 12 | | 3 | .270 |
| 14 | | | |
| 16 | | | |
| 18 | | | |
| 20 | | | |
| 22 | | | |
| 24 | | | |

* Shell size designation for MIL-DTL-38999 Series I, II, III and IV and MIL-C-26482 Series 1 and 2.
Examples: Shell size 9 use 08. Shell size 25 use 24.

** Size 22 contacts available in all 3 stickout lengths.
Size 16 and 20 contacts available only in .185 and .270 lengths.

*** Insert arrangement 14-97 and 15-97 are not available at this time. Consult Amphenol, Sidney NY for information.

# JT/LJT – thermocouple contacts, plastic protection caps, sealing plugs

## THERMOCOUPLE CONTACTS

| Contact Size | Material | JT/LJT Pins | JT Sockets | LJT Sockets |
|---|---|---|---|---|
| 20 | Chromel | 10-407862-310 | 10-407863-310 | 10-407236-310 |
| | Alumel | 10-407862-320 | 10-407863-320 | 10-407865-320 |
| | Iron | 10-407862-335 | 10-407863-335 | 10-407865-335 |
| | Constantan | 10-407862-342 | 10-407863-342 | 10-407865-342 |

Partial listing. If you do not see the contact for your application, consult Amphenol, Sidney, N.Y.

## PLASTIC PROTECTION CAPS

| JT | LJT | Plug | Receptacle |
|---|---|---|---|
| 8 | | 10-70500-10 | 10-70506-10S |
| | 9 | 10-70506-14 | 10-70500-10 |
| 10 | | 10-70506-14 | 10-70506-12 |
| | 11 | 10-70506-16 | 10-70500-12 |
| 12 | | 10-70506-16 | 10-70506-14 |
| | 13 | 10-70506-18 | 10-70500-14 |
| 14 | | 10-70506-18 | 10-70506-16 |
| | 15 | 10-70506-20 | 10-70500-16 |
| 16 | | 10-70506-20 | 10-70506-18 |
| | 17 | 10-70506-22 | 10-70500-18 |
| 18 | | 10-70506-22 | 10-70506-20 |
| | 19 | 10-70506-24 | 10-70500-20 |
| 20 | | 10-70506-24 | 10-70506-22 |
| | 21 | 10-70576-24 | 10-70500-22 |
| 22 | | 10-70576-24 | 10-70506-24 |
| | 23 | 10-70506-28 | 10-70500-24 |
| 24 | | 10-70506-28 | 10-70576-24 |
| | 25 | 10-558651-25 | 10-70506-28 |

## SEALING PLUGS

| Contact Size | Sealing Plugs | |
|---|---|---|
| | Proprietary No | MS No |
| 8 (Coax) | 10-482099-8 | MS27488-8 |
| 8 (Twinax) | T3-4008-59P | N/A |
| 10 (Power) | 10-576225 | N/A |
| 12 | 10-405996-12 | MS27488-12 |
| 16 | 10-405996-16 | MS27488-16 |
| 20 | 10-405996-20 | MS27488-20 |
| 22 | 10-405996-22 | MS27488-22 |
| 22M | 10-405996-22 | MS27488-22 |
| 22D | 10-405996-22 | MS27488-22 |

# JT/LJT application tools

The following data includes information pertaining to the application tools which have been established for crimping, inserting, and removing the size 12, 16, 20, 22, 22D and 22M contacts incorporated in the JT-R, LJT-R and MIL-DTL-38999 (MS) series connectors as applicable.

All crimping tools included are the “full cycling” type and when used as specified in the installation instructions (L-624 and L-844 covering the JT-R, LJT-R and MS series connectors) will provide reliable crimped wire to contact terminations. There is a possibility of additional crimping tools other than those included being available at present or in the future for this specific application.

For additional information on coaxial contacts, consult Amphenol catalog section 12-130.

## CRIMPING TOOLS

| Contact Size/Type | Crimping Tool | Turret Die or Positioner |
|---|---|---|
| 12 Pin and Socket | M22520/1-01 | M22520/1-04 |
| 16 Pin and Socket | M22520/1-01<br>M22520/7-01 | M22520/1-04<br>M22520/7-04 |
| 20 Pin and Socket | M22520/1-01<br>M22520/2-01<br>M22520/7-01 | M22520/1-04<br>M22520/2-10<br>M22520/7-08 |
| 22, 22D, 22M Pin | M22520/2-01<br>M22520/7-01 | M22520/2-09<br>M22520/7-07 |
| 22, 22D, 22M Socket (LJT-R) | M22520/2-01<br>M22520/7-01 | M22520/2-07<br>M22520/7-05 |
| 22D Socket (JT-R) | M22520/2-01<br>M22520/7-01 | M22520/2-06<br>M22520/7-06 |
| 8 Twinax Center Pin and Socket | M22520/2-01 | M22520/2-37 |
| 8 Twinax Intermediate Outer Pin & Socket | M22520/5-01 | M22520/5-200 |

| Contact Size/Type | Crimping Tool | Turret Die or Positioner |
|---|---|---|
| 8 (Coaxial Inner Pin and Socket) | M22520/2-01 | M22520/2-31 |
| 8 Coaxial Outer Pin and Socket | M22520/5-01 | M22520/5-05 Die Closure B |
| | M22520/5-01 | M22520/5-41 Die Closure B |
| | M22520/10-01 | M22520/10-07 Die Closure B |
| 16 Coaxial Inner Pin and Socket | M22520/2-01 | M22520/2-35 |
| 16 Coaxial Outer Pin and Socket | M22520/4-01 | M22520/4-02 |
| 12 Coaxial Inner Pin and Socket | M22520/2-01 | M22520/2-34 |
| 12 Coaxial Outer Pin and Socket | M22520/31-01 | M22520/31-02 |
| 10 (Power) | †† | †† |

Where 2 or 3 tools are listed for a contact size, only one tool and its die or positioner are required to crimp the contact. The above crimping tools and positioners are available from the approved tool manufacturer.

## INSERTION TOOLS

| Use with Contact Size | Plastic Tools | | Metal Tools | | | |
|---|---|---|---|---|---|---|
| | | | Angle Type | | Straight Type Proprietary Part Number | Color Code |
| | Part Number | Color Code | MS Part Number | Proprietary Part Number | | |
| 10 (Power) | M81969/14-05* | Gray/White | M81969/8-11 | † | † | Green |
| 12 | M81969/14-04* | Yellow/(White) | M81969/8-09 | 11-8674-12 | 11-8794-12 | Yellow |
| 16 | M81969/14-03* | Blue/(White) | M81969/8-07 | 11-8674-16 | 11-8794-16 | Blue |
| 20 | M81969/14-10* | Red/(Orange) | M81969/8-05 | 11-8674-20 | 11-8794-20 | Red |
| 22 | M81969/14-09 | Brown/(White) | M81969/8-03 | 11-8674-22 | 11-8794-22 | Brown |
| 22D, 22M | M81969/14-01* | Green/(White) | M81969/8-01 | 11-8674-24 | 11-8794-24 | Black |
| 8 Coaxial | None Required | | | | | |
| 8 Twinax | None | | M81969/46-06** | None | | Red |

## REMOVAL TOOLS

| Use with Contact Size | Plastic Tools | | Metal Tools | | | | |
|---|---|---|---|---|---|---|---|
| | | | | Angle Type | | | |
| | Part Number | Color Code | For Unwired Contacts Proprietary Part Number | MS Part Number | Proprietary Part Number | Straight Type Proprietary Part Number | Color Code |
| 10 (Power) | M81969/14-05* | (Green)/White | † | M81969/8-12 | † | † | Green/White |
| 12 | M81969/14-04* | (Yellow)/White | 11-10050-11 | M81969/8-10 | 11-8675-12 | 11-8795-12 | Yellow/White |
| 16 | M81969/14-03* | (Blue)/White | 11-10050-10 | M81969/8-08 | 11-8675-16 | 11-8795-16 | Blue/White |
| 20 | M81969/14-10* | (Red) Orange | 11-10050-9 | M81969/8-06 | 11-8675-20 | 11-8795-20 | Red/White |
| 22 | M81969/14-09* | (Brown)/White | 11-10050-8 | M81969/8-04 | 11-8675-22 | 11-8795-22 | Brown/White |
| 22D, 22M | M81969/14-01* | (Green)/White | 11-10050-7 | M81969/8-02 | 11-8675-24 | 11-8795-24 | Green/White |
| 8 Coaxial | M81969/14-12 | Green | None | None | 11-9170 | DRK264-8†† | N/A |
| 8 Twinax | M81969/14-12 | Green | None | M81969/46-12** | 11-9170 | N/A | N/A |

The M81969/8, 11-8674, 11-8675, and 11-8794 metal contact insertion and removal tools will accommodate wires having the maximum outside diameter as follows: Contact size 12– .155, 16– .109, 20– .077, 22, 22D, 22M– .050. When wire diameters exceed those specified, the plastic tools must be used.

* Double ended insertion/removal tool.
** Twinax insertion and removal tools are available only in a straight type, metal version.
† To be determined
†† Contact Daniels Manufacturing Co. for availability.

# JT/LJT – solder contact connectors

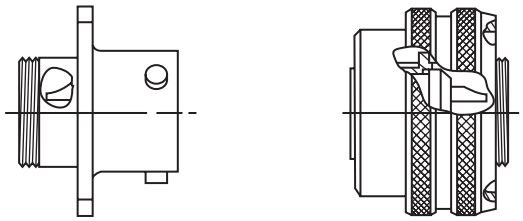

Wall Mounting Receptacle

Straight Plug

**JT Solder**

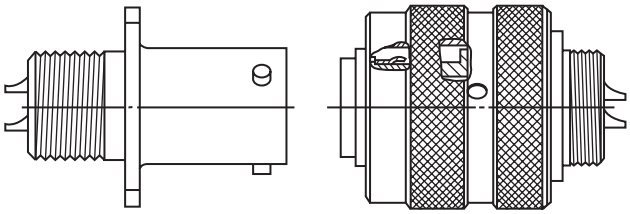

Wall Mounting Receptacle

Straight Plug

**LJT Solder**

Amphenol® LJT and JT Series solder contact connectors are qualified to Series I and II respectively, of MIL-C-27599. These connectors use a rigid, hard dielectric insert, which is molded around the pin and socket contacts. This permits a higher degree of pressurization across an interface, of up to $1x10^{-3}$ cc/sec. Contact positional tolerances are also considerably reduced, with less chance of pin bending.

Shell styles similar to MIL-DTL-38999 crimp connectors are available along with a large variety of contact sizes and insert patterns.

A complete line of accessories is also available.

For additional information on Amphenol® LJT/JT solder type connectors, ask for Product Data Sheet 158. Contact your local sales office or

Amphenol Corporation
Amphenol Aerospace
40 – 60 Delaware Avenue
Sidney, New York 13838-1395
Telephone:607-563-5011
Fax:607-563-5157
www.amphenol-aerospace.com

# JT/LJT
# how to order

## PROPRIETARY PART NUMBER

To more easily illustrate ordering procedure, part number JT00RE-22-2PA( ) is shown as follows:

**PART NUMBER**

| JT | 00 | RE - | 22 - | 2 | P | A | ( ) |
|---|---|---|---|---|---|---|---|
| 1 | 2 | 3 | 4 | 5 | 6 | 7 | 8/9 |

See code below:

**1. Connector Type:**

| | | |
|---|---|---|
| | JT | designates standard Junior Tri-Lock connector |
| LJT | | designates long Junior Tri-Lock connector |
| LJTS | JTS | designates high temperature connector |
| LJTN | JTN | designates chemical and fuel resistant |
| | JTL | designates miniature mounting dimensions |
| | JTLN | designates miniature mounting dimensions - chemical resistant |
| | JTLS | designates miniature mounting dimensions - high temperature |
| LJTPQ | JTPQ | designates back panel mounted wall mounting receptacle |
| LJTP | JTP | designates back panel mounted box mounting receptacle |
| LJTPN | JTPN | designates back panel mounted - chemical resistant |
| LJTPS | JTPS | designates back panel mounted - high temperature |
| | JTG | designates plug with grounding fingers* |
| | JTNG | designates plug with grounding fingers* - chemical resistant |

**2. Shell Style**

00 designates wall mount receptacle
01 designates line mount receptacle
02 designates box mount receptacle
06 designates straight plug
07 designates jam nut receptacle
08 designates 90 degree plug
I designates solder mount receptacle - hermetic

Lanyard Release Connectors (See pages 38-41 for ordering)

88 designates Fail Safe lanyard release plug with corrosion resistant olive drab cadmium plate over nickel shells
91 designates Fail Safe lanyard release plug with electroless nickel plated aluminum shells.

**3. Service Class: Solder contacts/connectors:**

"P" for potting applications - These connectors are supplied with a potting boot.† All shells are designed with integral featues to retain potting boots.
"A" for general applications.
"A (SR)" - threaded rear design with strain relief.†
"C" for pressurized applications
"C (SR)" - threaded rear design with strain relief.†
"E" box mount and thru-bulkhead only with no backend threads.
"H" for hermetic applications - Fused compression glass sealed inserts. Leakage rate less than .01 micron cu. ft./hr. (1 x $10^{-7}$ cc/sec.) at 15 psi differential.
"Y" same as "H" with interfacial seal.
"T" for MS27599A applications - general duty, pressurized (receptacles only)

**3. Service Class: Crimp contacts/connectors:**

"RP" for potting crimp applications. Supplied with spacer grommet and potting boot.††
"RE" for environmental crimp applications. Supplied with a grommet and compression nut.† Can be supplied with strain relief integral with compression nut "RE (SR)". (JT Series only).
"RGF"* electroless nickel plated ground plane aluminum, 200°C
"RGW"** olive drab cadmium plated ground plane aluminum, 175°C
"RT" for environmental applications. Supplied without rear accessories. Design provides serrations on rear threads of shells.

For additional information defining description of service class, consult Amphenol, Sidney, NY.

**4. Shell Size:**

JT shell sizes available from 8 through 24.
LJT shell sizes available from 9 through 25.

**5. Insert Arrangement:**

22-2 designates insert arrangement. Refer to pages 4-11 for insert availability.

**6. Contact Style:**

P designates pin contacts; S designates socket contacts.

**7. Alternate Keying:**

"A" designates alternate keying connector assembly. Other basic alternate keys are "B", "C" and "D". No letter required for normal (no rotation) position. See pages 4 and 5.

**8. Strain Relief Option:**

"SR" designates a strain relief clamp. Strain reliefs are available only on "A", "C" and "RE" class connectors.

**9. Finish Variation Suffix:**

See finish variations available in table below:

| Finish | Military Finish Data | Finish Suffix | Finish Plus "SR" Suffix |
|---|---|---|---|
| Cadmium plated nickel base | A | | (SR) |
| Olive drab cadmium plate nickel base | B | (014) | (386) |
| Electroless nickel | F | (023) | (424) |
| Electroless nickel, space compatible | | (453) | (467) |
| Anodic coating (Alumilite) | C | (005) | (300) |
| Chromate treated (Iridite 14-2) | | (011) | (344) |
| Passivated steel | E | – | – |
| Nickel-PTFE | | (038) | |

## MILITARY TYPES

MS27473 E 14 A 18 P A

MS Number
Service Class
Shell Size
Finish
Insert Arrangement
Contact Style (P or S)
Alternate Keying (No letter required for normal position)

Military Service Class
E environmental, same as RE
T environmental, same as RT
P potting, same as RP
Y hermetically sealed, same as Y

For finish variations see above chart. For additional data, see page 3.
For MS depictions and dimensional data see applicable Mil-Spec. (MIL-DTL-38999, MIL-C-27599).
Military Fail Safe lanyard release plug MS27661 - See pages 38-41 for ordering.

* Grounding fingers standard on all LJT plugs

† Not applicable to box mounting style or LJT Series I.
†† Not applicable to box mounting style.
** For more information on Coax/Triax/Twinax Ground Plane Connectors, see page 55.

# JT/LJT
# specials - filter protection connectors, Aquacon connectors and 38999 for PCB attachment

### FILTER/TRANSIENT PROTECTION

Filter and/or voltage surge arresting devices are integrated into a JT or an LJT connector to eliminate conventional bulky exterior filtering systems. This unique design reduces weight, space and user testing while providing system protection from EMI/ EMP. Ask for publication 12-120 or contact Amphenol, Sidney, NY for complete information on Amphenol® EMI Filter/Transient Protection Connectors.

JT with Filter Protection

LJT with Filter Protection

### AQUACON

Specially designed connectors for underwater and other fluid-immersion applications are available in all Amphenol JT/LJT insert arrangements. Aquacon AJ (immersible JT) or AL (immersible LJT) series connectors offer 1500 psi capability, visual mating indication to assure proper sealing upon mating, and design flexibility at low cost. Corrosion resistant materials and environment-proof molded cable terminations provide a connector well suited to immersed usage. AJ and AL Series Aquacon Connectors represent the utmost in general purpose immersible connectors. Refer to catalog 12-140 for additional data.

### FLEX TERMINATION ASSEMBLIES FOR PRINTED CIRCUIT BOARD APPLICATIONS

Flex circuits are available for MIL-DTL-38999 Series I and II connectors in flat and sculptured styles. Amphenol provides flex termination assemblies for printed circuit board attachment through Amphenol ACT, Advanced Circuit Technology. Sculptured® Flexible Circuits have built-in terminations that eliminate the failures associated with crimped or solder-on contacts. They plug into a printed circuit board and create a self-locking terminal pad which eliminates the need for an additional interconnect to the PCB. They are designed to meet specific lengths, current carrying capacities and to fit the precise geometric shape of the connector to board package. For more information see ACT brochure.

### MIL-DTL-38999 WITH PC TAIL CONTACTS

Amphenol provides cylindrical connectors with PC tail contacts for solder mounting on printed circuit boards. They available in MIL-DTL-38999 Series I, II and III as well as other mil-spec and proprietary cylindricals. These connectors incorporate PCB contacts in sizes 16, 20 and 22D. Most popularly used arrangements are shown with pin-out dimensional layouts in Amphenol catalog 12-170, Cylindrical Connectors for PCB Application.

**For more information on these products visit website: www.amphenol-aerospace.com**

# JT/LJT
# specials - ground plane connectors and shielded contacts

Amphenol offers MIL-DTL-38999 Series I and II* connectors for data bus, LAN and coax/triax/twinax transmission lines with conductive inserts that ground the outer conductor of the coax, triax or twinax contact to the shell. These connectors are sold “less contacts”. They will accommodate size 8 coax, triax or twinax contacts or size 12 and 16 coax contacts.

The insert availability chart on pages 4-6 indicate the patterns that are available in a ground plane version, (see those designated with a star symbol), and consult how to order page for ordering procedure.

**Ground Plane Connector with Metallic Insert, Power Contacts and Shielded Twinax Contacts**

## CONNECTORS WITH COAX CONTACTS

For shielded wire applications, coaxial contacts can be incorporated into MIL-DTL-38999 connectors. Designed-in crimp or solder types are available to fit various RG and special cables. High performance coaxial contacts eliminate discontinuities or impedance variations due to movement of parts under axial load. For further information on coax contacts ask for catalog 12-130.

## CONNECTORS WITH CONCENTRIC TWINAX CONTACTS

The size 8 concentric twinax contact was developed for use in MIL-STD-1553 Airborne multiplex data bus applications which require high performance interconnect characteristics in multi-pin connectors. Ideal for this application need is the high performance Tri-Start connector with its fully scoop-proof feature of recessed pins. (See Amphenol catalog 12-092) The concentric twinax contact is crimp terminable to twisted-shielded cable. Other features include:

- Provides protection from magnetic and electrostatic interference
  including nuclear electromagnetic pulse
- Maintains shield integrity through a multi-pin cylindrical connector and does not require contact polarization within the insert
- 175°C rated and meets performance levels of MIL-DTL-38999 Series III connectors
- Available in size 8 and 12 contacts
- MIL-C-17/176-00002 cable termination
- Qualified to M39029/90 & /91
- Integral part of the MIL-STD-1760 interconnection system

For further information on concentric twinax contacts, consult catalog 12-130.

**Size 8 Concentric Twinax Contacts Qualified to M39029/90 and /91 (Also available in Size 12)**

## CONNECTORS WITH REDUCED COMPONENT TWINAX (RCT) CONTACTS

The RCT (Reduced Component Twinax) contact meets MIL-C-39029/90 and /91 requirements for intermateability and performance while reducing the number of user-assembled components from seven to three. The inner conductors and outer barrel of the RCT are each terminated to the cable by a crimp joint, so no costly assembly soldering operations are required. Features include:

- Three user assembled components
- Available in size 8 and size 10 contacts
- MIL-C-17/176-00002 cable termination
- For installation in MIL-DTL-38999 Series III connectors
- Termination completed in only two crimping operations
- Inner conductors stripped to common length, eliminating multiple measurements

For further information on RCT contacts, consult catalog 12-130.

**Size 8 RCT (Reduced Component Twinax) Contact (Also available in Size 10)**

*MIL-DTL-38999 Series III supersedes MIL-C-38999 Series III

Общество с ограниченной ответственностью «МосЧип» ИНН 7719860671 / КПП 771901001
Адрес: 105318, г.Москва, ул.Щербаковская д.3, офис 1107

**Данный компонент на территории Российской Федерации**

**Вы можете приобрести в компании MosChip.**

Для оперативного оформления запроса Вам необходимо перейти по данной ссылке:

http://moschip.ru/get-element

Вы можете разместить у нас заказ для любого Вашего проекта, будь то серийное производство или разработка единичного прибора.

В нашем ассортименте представлены ведущие мировые производители активных и пассивных электронных компонентов.

Нашей специализацией является поставка электронной компонентной базы двойного назначения, продукции таких производителей как XILINX, Intel (ex.ALTERA), Vicor, Microchip, Texas Instruments, Analog Devices, Mini-Circuits, Amphenol, Glenair.

Сотрудничество с глобальными дистрибьюторами электронных компонентов, предоставляет возможность заказывать и получать с международных складов практически любой перечень компонентов в оптимальные для Вас сроки.

На всех этапах разработки и производства наши партнеры могут получить квалифицированную поддержку опытных инженеров.

Система менеджмента качества компании отвечает требованиям в соответствии с ГОСТ Р ИСО 9001, ГОСТ РВ 0015-002 и ЭС РД 009

**Офис по работе с юридическими лицами:**

105318, г.Москва, ул.Щербаковская д.3, офис 1107, 1118, ДЦ «Щербаковский»

Телефон: +7 495 668-12-70 (многоканальный)

Факс: +7 495 668-12-70 (доб.304)

E-mail: info@moschip.ru

Skype отдела продаж:
moschip.ru
moschip.ru_4
moschip.ru_6
moschip.ru_9