THIS DRAWING IS UNPUBLISHED. RELEASED FOR PUBLICATION 20
© COPYRIGHT 20 BY TYCO ELECTRONICS CORPORATION. ALL RIGHTS RESERVED.

DIMENSIONING AND TOLERANCING PER ASME Y14.5M-2009

SET UP GAUGE	LOC	DIST
2119599-1	A	66

REVISIONS

P	LTR	DESCRIPTION	DATE	DWN	APVD
	1	ORIGINAL	12SEPT2011	GH	TE
	A	RELEASED	15FEB2012	GH	GB

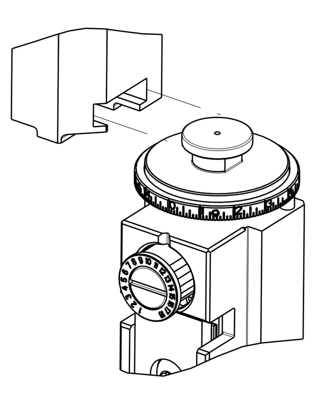

ATLANTIC VERSION TERMINATOR INTERFACE ADAPTER	PART NUMBER	REVISION	DESCRIPTION	FEED TYPE	APPLICATOR STYLE CONVERSION CHART: CONVERT TO	PART NUMBERS REQUIRED					
	2151495-1	A	FINE CRIMP HEIGHT ADJUST	MECHANICAL	PNEUMATIC FEED	2119950-1	1338685-1	5-18022-5	2119641-1	2119799-1	2063440-1
					SERVO LATCH PLATE	2119951-1	-	8-2151495-5	1901094-3	-	2168400-6 (QUANTITY 2)
					SMART APPLICATOR	2161326-1	-	8-2151495-4	-	-	-
	2151495-2	A	FINE CRIMP HEIGHT ADJUST	PNEUMATIC	MECHANICAL FEED	2119949-1	1338685-1	5-18022-5	2119653-1	-	-
					SERVO LATCH PLATE	2119951-1	-	8-2151495-5	1901094-3	-	2168400-6 (QUANTITY 2)
					SMART APPLICATOR	2161326-1	-	8-2151495-4	-	-	-
	2151495-5	A	FINE CRIMP HEIGHT ADJUST	SERVO LATCH PLATE △4	MECHANICAL FEED	2119949-1	1338685-1	5-18022-5	2119653-1	-	-
					PNEUMATIC FEED	2119950-1	1338685-1	5-18022-5	2119641-1	2119799-1	2063440-1
	2151495-6	A	NON-CRIMP HEIGHT ADJUST	△4 SERVO LATCH PLATE △12	-	-	-	-	-	-	-
					-	-	-	-	-	-	-
	2151495-7	A	FINE CRIMP HEIGHT ADJUST	NONE	-	-	-	-	-	-	-
	7-2151495-7	A	CRIMP TOOLING KIT	-	-	-	-	-	-	-	-

APPLICATOR DATA		
CRIMP	SIZE	TYPE
WIRE	3.56 mm [.140]	F
INSUL	0.00 mm [.000]	-
APPLICATOR INSTRUCTIONS 408-10389		

TERMINAL DATA: TE TERMINAL	TE CRIMP SPECIFICATION		
TERMINAL NAME: UNIVERSAL MATE-N-LOCK PIN AND SOCKET			
WIRE STRIP LENGTH 6.38-7.14 mm [.251-.281 IN]	INSULATION DIAMETER RANGE ∅0.00-5.08 mm [.000-.200 IN]		
TERMINAL APPLICATION SPECIFICATION	114-1010	-	-
	-	-	-

TERMINALS APPLIED

TE TERMINAL	TE TERMINAL	TE TERMINAL	TE TERMINAL
350923-3	770004-4	350922-3	770003-4
350923-4	1-770004-0	350922-6	770003-8
350923-6	1586065-1	770234-3	1-770003-0
770004-3	350922-1	770003-3	1586096-1

WIRE SIZE	CRIMP HEIGHT mm [INCH]	CRIMP HEIGHT REFERENCE SETTING △9
10 AWG	2.41+/-0.05 [.095+/-.002]	6.2
5.00mm2	2.31+/-0.05 [.091+/-.002]	7.4
4.40mm2	2.13+/-0.05 [.084+/-.002]	9.5
4.00mm2	2.03+/-0.05 [.080+/-.002]	10.7
12 AWG	1.96+/-0.05 [.077+/-.002]	11.3

△1 RECOMMENDED SPARE PARTS

△2 GREASE BEARING SURFACES LIGHTLY

3. LUBRICATE DAILY PER THE APPLICATOR INSTRUCTION SHEET SUPPLIED WITH THE APPLICATOR.

△4 APPLICATOR SPECIFIC DATA TO BE ENTERED INTO BLANK MEMORY CHIP AT ASSEMBLY. SEE BELOW FOR PART NUMBER:
MECHANICAL FEED WITH "SMART APPLICATOR" CONVERSION: 8-2151495-4
PNEUMATIC FEED WITH "SMART APPLICATOR" CONVERSION: 8-2151495-4
SERVO FEED WITH "FINE CRIMP HEIGHT ADJUST": 8-2151495-5
SERVO FEED WITH "NON-CRIMP HEIGHT ADJUST": 8-2151495-6

5. ADJUSTMENT OF THE STRIPPER MAY BE REQUIRED WHEN MOVING THE APPLICATOR BETWEEN BENCH AND LEADMAKER APPLICATIONS.

△6 APPLY PART NUMBER 1-23419-5 LOCTITE TO THREADS OF ITEM 50.

△7 GREASE THREADS, GROOVE AND O-RING ON ITEMS 35 & 252.

△8 MAGNET, ITEM 166 MUST BE ORIENTED CORRECTLY IN ORDER TO PROPERLY ACTUATE THE COUNTER.

△9 CRIMP HEIGHT REFERENCE SETTING WAS THE SETTING USED WHEN THE APPLICATOR WAS QUALIFIED AT THE FACTORY. ADJUSTMENT MAY BE NECESSARY WHEN RUNNING APPLICATOR IN THE FIELD.

△10 SPARE FEED CAM STORAGE LOCATION REFER TO INSTRUCTION SHEET FOR ADDITIONAL INFORMATION.

△11 TO CONVERT THE APPLICATOR TO A NON-CARRIER CUTTING STYLE, REMOVE ITEM 13 AND ATTACH TO THE LOCATION ON THE BACK SIDE OF THE HOUSING. REFER TO INSTRUCTION SHEET FOR ADDITIONAL INFORMATION.

△12 WHEN ASSEMBLING -6 NON-CRIMP HEIGHT ADJUST APPLICATOR USE SHIM PACK 2119957-2 TO ALIGN APPLICATOR'S MAXIMUM WIRE CRIMP HEIGHT AT NORMAL TERMINATOR SHUT HEIGHT

*WARNING
ON INSTALLATION, SET WIRE DISC, ITEM 40 TO LARGEST WIRE SIZE SETTING. USE OF SETTINGS BELOW MINIMUM REQUIRED CRIMP HEIGHT SETTING WILL CAUSE DAMAGE TO CRIMP TOOLING.

	-77	-7	-6	-5	-2	-1	PART NO	DESCRIPTION	ITEM NO
	-	-	1	-	-	-	2119957-2	APPLICATOR SHIM PACK	260
	-	1	-	1	1	1	8-21084-0	O-RING, .676 ID, .070 DIA. MAT.	252
	-	-	-	-	1	-	2119640-1	PUSH ROD, AIR FEED	250
	-	-	-	-	1	-	2079988-1	BUSHING, LCH5-12, MISUMI	249
	-	-	-	-	1	-	2119641-1	FEED CAM, AIR FEED	248
	-	1	-	1	1	1	2119798-1	DETENT PIN	247
	-	1	-	1	1	1	1-22279-3	SPRING, COMPRESSION	246
	-	-	1	-	-	-	2119758-1	RAM, AMP STYLE, SIDE FEED, NON-ADJ.	245
	-	1	1	1	1	1	18023-1	SCR, SKT HD CAP M3 X 5.0	241
	-	-	2	2	-	-	2168400-6	SHCS, LOW HEAD, RoHS, M5 X 16	240
	-	-	-	-	-	1	2119580-1	MECHANICAL FEED ASSEMBLY	239
	-	-	-	-	1	-	2063440-1	AIR FEED MODULE	238
	-	1	1	1	1	1	2119091-4	SHIM, LAMINATE	221
	-	-	1	1	-	-	2119740-2	TAG,IDENTIFICATION	213
	-	-	1	1	-	-	1901094-3	SPACER, FEEDER	198
	-	1	1	1	1	1	993111-1	PIN, SLOTTED SPRING 3.0 X 20.0	177
	-	1	1	1	1	1	8-22280-7	SPRING, COMPRESSION	176
	-	1	1	1	1	1	1752353-2	GUIDE PIN,HOLDDOWN	175
	-	1	1	1	1	1	1901680-2	GUIDE PIN,HOLDDOWN	174
	-	-	-	-	2	-	21045-3	RING, RETAIN, EXTERN, 3/16 CRESCENT	172
	-	1	1	1	1	1	994969-1	MAGNET, RARE EARTH HIGH ENERGY	166
	-	REF	REF	REF	REF	REF	994970-2	COUNTER, MAGNETIC	164
	-	-	-	-	1	-	240638-1	SPRING, FEED FINGER	163
	-	-	-	-	1	-	3-23627-7	PIN, RETAIN, GRVD, 3/16 X .854	137
	-	-	-	-	1	-	2119799-1	HOLDER,FEED FINGER, AF	136
	-	-	REF	REF	-	-	SEE NOTE 4	MEMORY CHIP, PROGRAMMED	135
	-	-	1	1	-	-	1633743-1	SERVO FEED LATCH ASM	133
	-	1	1	1	1	1	1-18028-2	WASHER, FLAT, REG M4	119
	-	-	REF	REF	-	-	2119944-1	FEED FINGER ASSEMBLY,SF	117
	-	1	1	1	1	1	455888-7	SPACER, CRIMPER	82
	-	1	1	1	1	1	2119956-1	DOCUMENTATION PACKAGE	71
	-	1	-	-	1	1	2119740-1	TAG,IDENTIFICATION	67
	-	2	2	2	2	2	2168078-1	SCREW, DRIVE, RH, RoHS	66
	-	1	-	1	1	1	2119793-1	LIMITER, ADJUSTMENT BOLT	63
	-	3	-	3	3	3	992763-5	SCR, SET, SOC, CONE POINT, M3 x 4.0	62
	-	1	1	1	1	1	2079383-4	SCR, BHSC, RoHS (M4 X 8)	60
	-	-	-	-	1	1	5-18022-5	SCR, HEX HD CAP, M4 X 6.0	59
	-	-	-	-	1	1	1338685-1	PAWL, FEED	56
	-	4	4	4	4	4	2168400-1	SHCS, LOW HEAD, RoHS, M4 X 12	54
	-	1	1	1	1	1	1-5018030-0	NUT, HEX, REG, RoHS, M3.5	52
	-	1	1	1	1	1	1901681-1	HOLDDOWN, TERMINAL	51
	-	1	1	1	1	1	1-1752354-9	STANDOFF,HOLD-DOWN	50
	-	-	-	-	1	2	18023-9	SCR, SKT HD CAP M4 X 6.0	49
	-	-	-	-	-	1	2119652-1	FEED CAM, PRE FEED	48
	-	-	-	-	-	1	2119653-1	FEED CAM, POST FEED	47
	-	1	1	1	1	1	2119656-9	APPLICATOR BASIC ASSEMBLY, SF	46
	-	1	-	1	1	1	2119370-1	RAM, AMP STYLE, SIDE FEED	44
	-	1	1	1	1	1	2079383-7	SCR, BHSC, RoHS (M8 X 25)	41
	-	1	-	1	1	1	2119645-1	DISC, NUMBERED FA WIRE ADJUSTMENT	40
	-	1	-	1	1	1	2119957-1	APPLICATOR SHIM PACK	39
	-	1	1	1	1	1	2119644-2	RAM WASHER, PRECISION	38
	-	1	1	1	1	1	2119085-1	FA HEAD, ATLANTIC STYLE	37
	-	1	-	1	1	1	2119092-1	BOLT, ADJUSTMENT	35
	-	1	1	1	1	1	1-1752356-8	SUPPORT, TERMINAL	34
	-	2	2	2	2	2	2079383-5	SCR, BHSC, RoHS (M4 X 20)	33
	-	1	1	1	1	1	2161328-1	HEX HEAD, FLANGED, M5 x 8mm LONG	32
	-	1	1	1	1	1	1-1320908-0	SPACER, STRIP GUIDE	30
	-	1	1	1	1	1	2119959-1	ASSEMBLY, STRIP GUIDE	29
	-	1	1	1	1	1	1-455888-0	SPACER, CRIMPER	28
	-	1	1	1	1	1	1320928-2	PLATE, STRIP GUIDE	24
	-	1	1	1	1	1	2168083-2	SCR, SKT HD CAP, RoHS, M4 X 8.0	21
	-	1	1	1	1	1	1-18028-2	WASHER, FLAT, REG M4	20
	-	1	1	1	1	1	2119533-1	STRIPPER, SIDE FEED	19
△1	-	1	1	1	1	1	2119806-1	INSERT, SHEAR	13
	-	1	1	1	1	1	3-22280-3	SPRING, COMPRESSION	12
	-	1	1	1	1	1	1-356885-4	STOP, SHEAR	11
△1	-	1	1	1	1	1	2119805-1	SHEAR HOLDER, FRONT	10
△1	-	1	1	1	1	1	462006-6	FLOATING SHEAR, FRONT	9
△1	1	1	1	1	1	1	1333227-5	ANVIL, SPECIAL (WIRE/B ONLY)	8
	-	1	1	1	1	1	1-2119757-0	DEPRESSOR, SHEAR	5
△1	1	1	1	1	1	1	1-456411-2	CRIMPER, WIRE PREMIUM	1

ATLANTIC VERSION
Shown on sheets 1 of 4 & 2 of 4
(Pacific version shown on sheets 3 of 4 & 4 of 4)

THIS DRAWING IS A CONTROLLED DOCUMENT FOR TYCO ELECTRONICS CORPORATION. IT IS SUBJECT TO CHANGE AND THE CONTROLLING ENGINEERING ORGANIZATION SHOULD BE CONTACTED FOR THE LATEST REVISION.

DIMENSIONS: mm

TOLERANCES UNLESS OTHERWISE SPECIFIED:
0 PLC ±-
1 PLC ±0.5
2 PLC ±0.13
3 PLC ±0.013
4 PLC ±0.0001
ANGLES ±-

MATERIAL - -
FINISH - -

DWN G.HOFFNER 12SEPT2011
CHK G.BAILEY 13SEPT2011
APVD G.BAILEY 13SEPT2011
PRODUCT SPEC -
APPLICATION SPEC -
WEIGHT -

TE Connectivity
Harrisburg, PA 17105-3608

NAME: Ocean Side Feed Applicator -

SIZE A1 | CAGE CODE 00779 | DRAWING NO C-2151495 | RESTRICTED TO -

CUSTOMER ACCESSIBLE PRODUCTION DRAWING | SCALE 1:2 | SHEET 1 OF 4 | REV A

SHEETS 3 & 4 ARE NOT REQUIRED FOR ATLANTIC VERSION

AMP 4805 REV 31MAR2000

Pro/ENGINEER DRAWING

THIS DRAWING IS UNPUBLISHED. RELEASED FOR PUBLICATION 20
© COPYRIGHT 20 BY TYCO ELECTRONICS CORPORATION. ALL RIGHTS RESERVED.

LOC	DIST
A	66

REVISIONS

P	LTR	DESCRIPTION	DATE	DWN	APVD
	-	SEE SHEET 1	-	-	-

DIMENSIONING AND TOLERANCING PER ASME Y14.5M-2009

FEED TYPE MECHANICAL

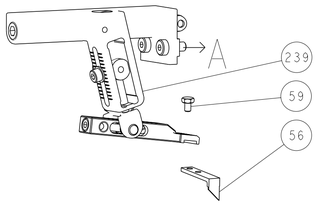

PNEUMATIC

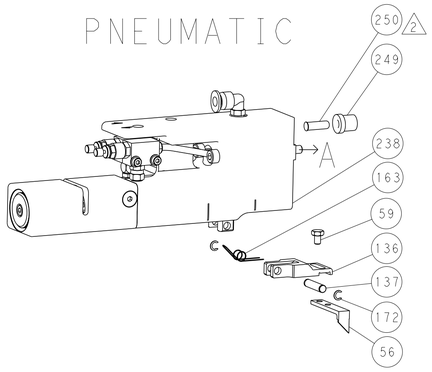

SERVO LATCH PLATE

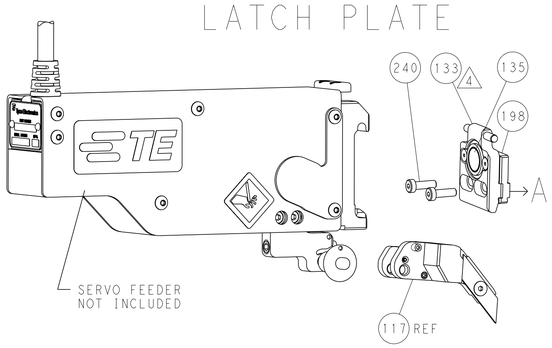

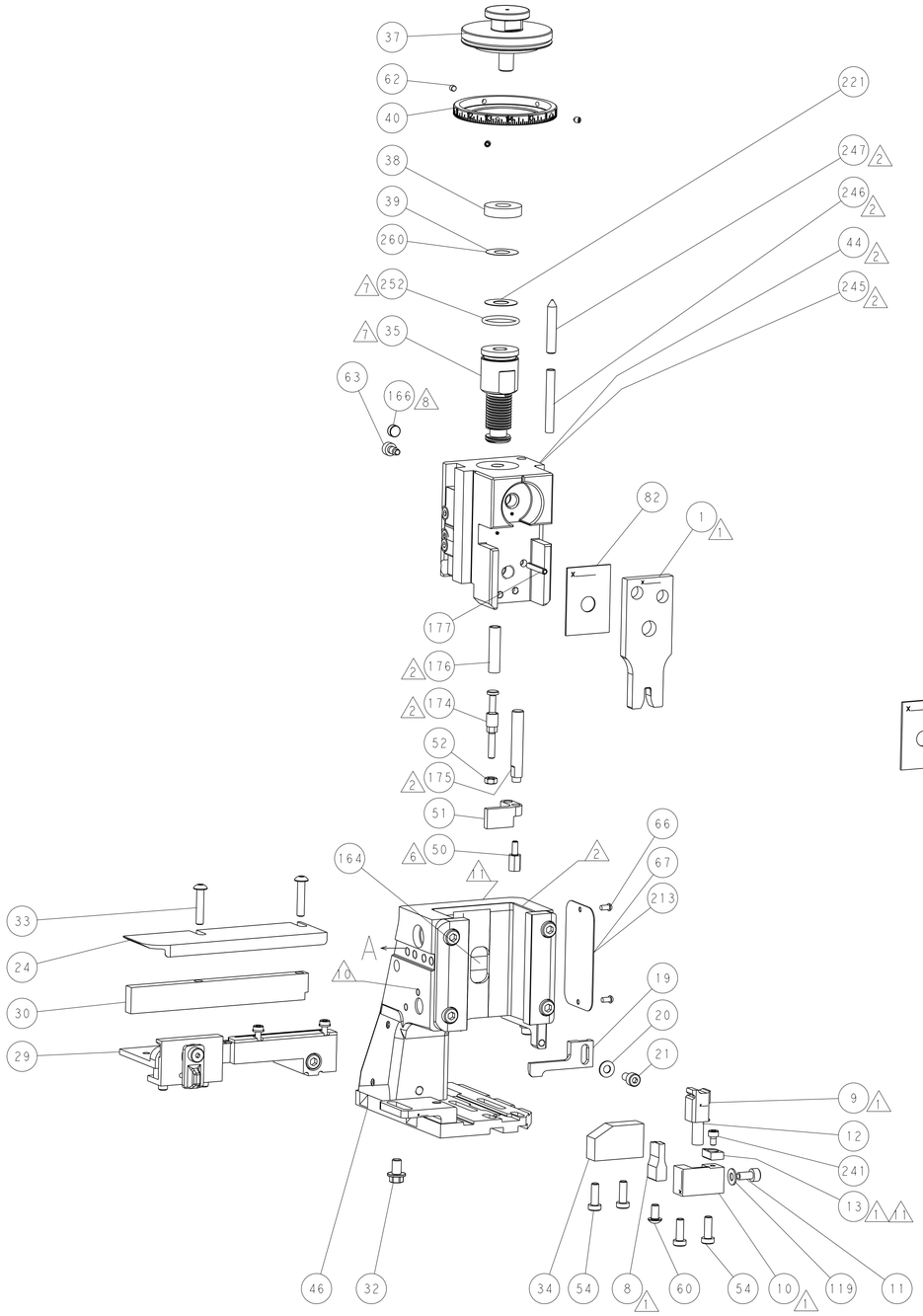

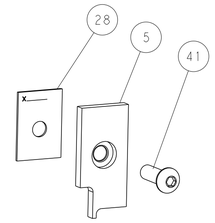

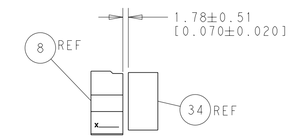

TERMINAL SUPPORT LOCATION

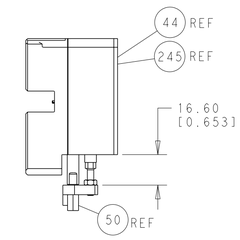

HOLDDOWN SET-UP

ITEM 30 LOCATED AT FRONT HOLES

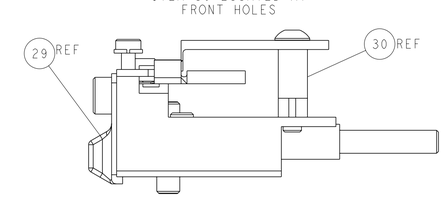

FEED TRACK POSITION GUIDE BY WIRE BARREL

CAM POSITIONS

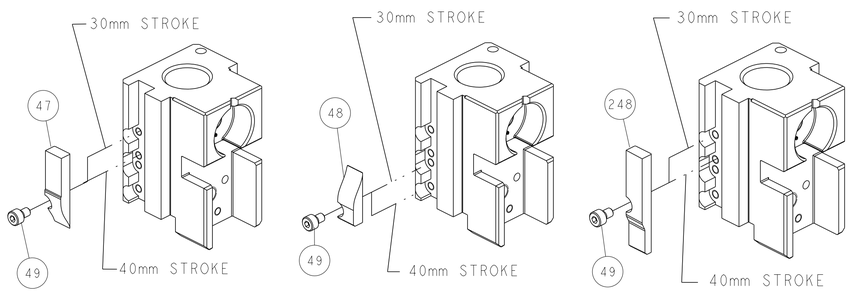

MECHANICAL POST FEED

MECHANICAL PRE FEED

AIR FEED

ATLANTIC VERSION

Shown on sheets 1 of 4 & 2 of 4
(Pacific version shown on sheets 3 of 4 & 4 of 4)

THIS DRAWING IS A CONTROLLED DOCUMENT FOR TYCO ELECTRONICS CORPORATION. IT IS SUBJECT TO CHANGE AND THE CONTROLLING ENGINEERING ORGANIZATION SHOULD BE CONTACTED FOR THE LATEST REVISION.

DIMENSIONS: mm

TOLERANCES UNLESS OTHERWISE SPECIFIED:
0 PLC ±-
1 PLC ±0.5
2 PLC ±0.13
3 PLC ±0.013
4 PLC ±0.0001
ANGLES ±-

MATERIAL -
FINISH -

DWN	G.HOFFNER	12SEPT2011
CHK	G.BAILEY	13SEPT2011
APVD	G.BAILEY	13SEPT2011
PRODUCT SPEC	-	
APPLICATION SPEC	-	
WEIGHT	-	

TE Connectivity
Harrisburg, PA 17105-3608

NAME: Ocean Side Feed Applicator -

SIZE	CAGE CODE	DRAWING NO	RESTRICTED TO
A1	00779	C-2151495	-

CUSTOMER ACCESSIBLE PRODUCTION DRAWING | SCALE 1:2 | SHEET 2 OF 4 | REV A

AMP 4805 REV 31MAR2000

SHEETS 3 & 4 ARE NOT REQUIRED FOR ATLANTIC VERSION

THIS DRAWING IS UNPUBLISHED. RELEASED FOR PUBLICATION 20
© COPYRIGHT 20 BY TYCO ELECTRONICS CORPORATION. ALL RIGHTS RESERVED.

SET UP GAUGE	LOC	DIST
2119599-1	A	66

REVISIONS					
P	LTR	DESCRIPTION	DATE	DWN	APVD
	-	SEE SHEET 1	-	-	-

PACIFIC VERSION TERMINATOR INTERFACE ADAPTER	PART NUMBER	REVISION	DESCRIPTION	FEED TYPE	APPLICATOR STYLE CONVERSION CHART: CONVERT TO	PART NUMBERS REQUIRED					
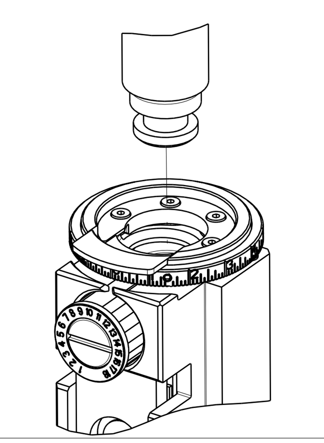	2-2151495-1	A	FINE CRIMP HEIGHT ADJUST	MECHANICAL	PNEUMATIC FEED	2119950-1	1338685-1	5-18022-5	2119641-2	2119799-1	2063440-1
					SERVO LATCH PLATE	2119951-1	-	8-2151495-5	1901094-3	-	2168400-6 (QUANTITY 2)
					SMART APPLICATOR	2161326-1	-	8-2151495-4	-	-	-
	2-2151495-2	A	FINE CRIMP HEIGHT ADJUST	PNEUMATIC	MECHANICAL FEED	2119949-1	1338685-1	5-18022-5	2119653-2	-	-
					SERVO LATCH PLATE	2119951-1	-	8-2151495-5	1901094-3	-	2168400-6 (QUANTITY 2)
					SMART APPLICATOR	2161326-1	-	8-2151495-4	-	-	-
	2-2151495-5	A	FINE CRIMP HEIGHT ADJUST	SERVO LATCH PLATE (4)	MECHANICAL FEED	2119949-1	1338685-1	5-18022-5	2119653-2	-	-
					PNEUMATIC FEED	2119950-1	1338685-1	5-18022-5	2119641-2	2119799-1	2063440-1
	2-2151495-7	A	FINE CRIMP HEIGHT ADJUST	NONE	-	-	-	-	-	-	-
	7-2151495-7	A	CRIMP TOOLING KIT	-	-	-	-	-	-	-	-

DIMENSIONING AND TOLERANCING PER ASME Y14.5M-2009

APPLICATOR DATA		
CRIMP	SIZE	TYPE
WIRE	3.56 mm [.140]	F
INSUL	0.00 mm [.000]	-
APPLICATOR INSTRUCTIONS 408-10389		

TERMINAL DATA: TE TERMINAL		TE CRIMP SPECIFICATION	
TERMINAL NAME: UNIVERSAL MATE-N-LOCK PIN AND SOCKET			
WIRE STRIP LENGTH 6.38-7.14 mm [.251-.281 IN]		INSULATION DIAMETER RANGE ∅0.00-5.08 mm [.000-.200 IN]	
TERMINAL APPLICATION SPECIFICATION	114-1010	-	-
	-	-	-

TERMINALS APPLIED

TE TERMINAL	TE TERMINAL	TE TERMINAL	TE TERMINAL
350923-3	770004-4	350922-3	770003-4
350923-4	1-770004-0	350922-6	770003-8
350923-6	1586065-1	770234-3	1-770003-0
770004-3	350922-1	770003-3	1586096-1

WIRE SIZE	CRIMP HEIGHT mm [INCH]	CRIMP HEIGHT (9) REFERENCE SETTING
10 AWG	2.41+/-0.05 [.095+/-.002]	6.2
5.00mm2	2.31+/-0.05 [.091+/-.002]	7.4
4.40mm2	2.13+/-0.05 [.084+/-.002]	9.5
4.00mm2	2.03+/-0.05 [.080+/-.002]	10.7
12 AWG	1.96+/-0.05 [.077+/-.002]	11.3

1. RECOMMENDED SPARE PARTS
2. GREASE BEARING SURFACES LIGHTLY
3. LUBRICATE DAILY PER THE APPLICATOR INSTRUCTION SHEET SUPPLIED WITH THE APPLICATOR.
4. APPLICATOR SPECIFIC DATA TO BE ENTERED INTO BLANK MEMORY CHIP AT ASSEMBLY. SEE BELOW FOR PART NUMBER:
   MECHANICAL FEED WITH "SMART APPLICATOR" CONVERSION: 8-2151495-4
   PNEUMATIC FEED WITH "SMART APPLICATOR" CONVERSION: 8-2151495-4
   SERVO FEED WITH "FINE CRIMP HEIGHT ADJUST": 8-2151495-5
   SERVO FEED WITH "NON-CRIMP HEIGHT ADJUST": 8-2151495-6
5. ADJUSTMENT OF THE STRIPPER MAY BE REQUIRED WHEN MOVING THE APPLICATOR BETWEEN BENCH AND LEADMAKER APPLICATIONS.
6. APPLY PART NUMBER 1-23419-5 LOCTITE TO THREADS OF ITEM 50.
7. GREASE THREADS, GROOVE AND O-RING ON ITEMS 139 & 152.
8. MAGNET MUST BE ORIENTED CORRECTLY IN ORDER TO PROPERLY ACTUATE THE COUNTER.
9. CRIMP HEIGHT REFERENCE SETTING WAS THE SETTING USED WHEN THE APPLICATOR WAS QUALIFIED AT THE FACTORY. ADJUSTMENT MAY BE NECESSARY WHEN RUNNING APPLICATOR IN THE FIELD.
10. SPARE FEED CAM STORAGE LOCATION REFER TO INSTRUCTION SHEET FOR ADDITIONAL INFORMATION.
11. TO CONVERT THE APPLICATOR TO A NON-CARRIER CUTTING STYLE, REMOVE ITEM 13 AND ATTACH TO THE LOCATION ON BACK SIDE OF THE HOUSING. REFER TO INSTRUCTION SHEET FOR ADDITIONAL INFORMATION.

*WARNING
ON INSTALLATION, SET WIRE DISC, ITEM 40 TO LARGEST WIRE SIZE SETTING. USE OF SETTINGS BELOW MINIMUM REQUIRED CRIMP HEIGHT SETTING WILL CAUSE DAMAGE TO CRIMP TOOLING.

NOTE	-77	-27	-25	-22	-21	PART NO	DESCRIPTION	ITEM NO
	-	1	1	1	1	2119782-1	FINE ADJUST HEAD ASM, PACIFIC STYLE	251
	-	-	-	1	-	2119640-1	PUSH ROD, AIR FEED	250
	-	-	-	1	-	2079988-1	BUSHING, LCH5-12, MISUMI	249
	-	1	1	1	1	1-22279-3	SPRING, COMPRESSION	246
	-	1	1	1	1	18023-1	SCR, SKT HD CAP M3 X 5.0	241
	-	-	2	-	-	2168400-6	SHCS, LOW HEAD, RoHS, M5 X 16	240
	-	-	-	-	1	2119580-1	MECHANICAL FEED ASSEMBLY	239
	-	-	-	1	-	2063440-1	AIR FEED MODULE	238
	-	1	1	1	1	2119091-4	SHIM, LAMINATE	221
	-	-	1	-	-	2119740-2	TAG,IDENTIFICATION	213
	-	-	1	-	-	1901094-3	SPACER, FEEDER	198
	-	1	1	1	1	993111-1	PIN, SLOTTED SPRING 3.0 X 20.0	177
	-	1	1	1	1	8-22280-7	SPRING, COMPRESSION	176
	-	1	1	1	1	1752353-2	GUIDE PIN,HOLDDOWN	175
	-	1	1	1	1	1901680-2	GUIDE PIN,HOLDDOWN	174
	-	-	-	2	-	21045-3	RING, RETAIN, EXTERN, 3/16 CRESCENT	172
	-	1	1	1	1	994969-1	MAGNET, RARE EARTH HIGH ENERGY	166
	-	REF	REF	REF	REF	994970-2	COUNTER, MAGNETIC	164
	-	-	-	1	-	240638-1	SPRING, FEED FINGER	163
	-	1	1	1	1	8-21084-1	O-RING, .801 ID, .070 DIA. MAT.	152
	-	-	-	1	-	2119641-2	FEED CAM, AIR FEED	151
	-	1	1	1	1	2119798-2	DETENT PIN	145
	-	1	1	1	1	2079383-8	SCR, BHSC, RoHS (M4 X 16)	144
	-	4	4	4	4	2168400-5	SHCS, LOW HEAD, RoHS, M4 X 20	143
	-	-	-	-	1	2119653-2	FEED CAM, POST FEED	142
	-	1	1	1	1	1-2119656-0	APPLICATOR BASIC ASSEMBLY, SF	141
	-	1	1	1	1	2119650-1	RAM, ASIAN STYLE, SIDE FEED	140
	-	1	1	1	1	2119092-2	BOLT, ADJUSTMENT	139
	-	-	-	1	-	3-23627-7	PIN, RETAIN, GRVD, 3/16 X .854	137
	-	-	-	1	-	2119799-1	HOLDER,FEED FINGER, AF	136
	-	-	REF	-	-	SEE NOTE 4	MEMORY CHIP, PROGRAMMED	135
	-	-	1	-	-	1633743-1	SERVO FEED LATCH ASM	133
	-	1	1	1	1	1-18028-2	WASHER, FLAT, REG M4	119
	-	-	REF	-	-	2119944-1	FEED FINGER ASSEMBLY,SF	117
	-	1	1	1	1	455888-7	SPACER, CRIMPER	82
	-	1	1	1	1	2119956-1	DOCUMENTATION PACKAGE	71
	-	1	-	1	1	2119740-1	TAG,IDENTIFICATION	67
	-	2	2	2	2	2168078-1	SCREW, DRIVE, RH, RoHS	66
	-	1	1	1	1	2119793-1	LIMITER, ADJUSTMENT BOLT	63
	-	3	3	3	3	992763-5	SCR, SET, SOC, CONE POINT, M3 x 4.0	62
	-	-	-	1	1	5-18022-5	SCR, HEX HD CAP, M4 X 6.0	59
	-	-	-	1	1	1338685-1	PAWL, FEED	56
	-	1	1	1	1	1-5018030-0	NUT, HEX, REG, RoHS, M3.5	52
	-	1	1	1	1	1901681-1	HOLDDOWN, TERMINAL	51
	-	1	1	1	1	1-1752354-9	STANDOFF,HOLD-DOWN	50
	-	-	-	1	2	18023-9	SCR, SKT HD CAP M4 X 6.0	49
	-	-	-	-	1	2119652-1	FEED CAM, PRE FEED	48
	-	1	1	1	1	2079383-7	SCR, BHSC, RoHS (M8 X 25)	41
	-	1	1	1	1	2119645-1	DISC, NUMBERED FA WIRE ADJUSTMENT	40
	-	1	1	1	1	2119957-1	APPLICATOR SHIM PACK	39
	-	1	1	1	1	2119644-2	RAM WASHER, PRECISION	38
	-	1	1	1	1	1-1752356-8	SUPPORT, TERMINAL	34
	-	2	2	2	2	2079383-5	SCR, BHSC, RoHS (M4 X 20)	33
	-	1	1	1	1	2161328-1	HEX HEAD, FLANGED, M5 x 8mm LONG	32
	-	1	1	1	1	1-1320908-0	SPACER, STRIP GUIDE	30
	-	1	1	1	1	2119959-1	ASSEMBLY, STRIP GUIDE	29
	-	1	1	1	1	1-455888-0	SPACER, CRIMPER	28
	-	1	1	1	1	1320928-2	PLATE, STRIP GUIDE	24
	-	1	1	1	1	2168083-2	SCR, SKT HD CAP, RoHS, M4 X 8.0	21
	-	1	1	1	1	1-18028-2	WASHER, FLAT, REG M4	20
	-	1	1	1	1	2119533-1	STRIPPER, SIDE FEED	19
1	-	1	1	1	1	2119806-1	INSERT, SHEAR	13
	-	1	1	1	1	3-22280-3	SPRING, COMPRESSION	12
	-	1	1	1	1	1-356885-4	STOP, SHEAR	11
1	-	1	1	1	1	2119805-1	SHEAR HOLDER, FRONT	10
1	-	1	1	1	1	462006-6	FLOATING SHEAR, FRONT	9
1	1	1	1	1	1	1333227-5	ANVIL, SPECIAL (WIRE/B ONLY)	8
	-	1	1	1	1	1-2119757-0	DEPRESSOR, SHEAR	5
1	1	1	1	1	1	1-456411-2	CRIMPER, WIRE PREMIUM	1

PACIFIC VERSION
Shown on sheets 3 of 4 & 4 of 4
(Atlantic version shown on sheets 1 of 4 & 2 of 4)

THIS DRAWING IS A CONTROLLED DOCUMENT FOR TYCO ELECTRONICS CORPORATION IT IS SUBJECT TO CHANGE AND THE CONTROLLING ENGINEERING ORGANIZATION SHOULD BE CONTACTED FOR THE LATEST REVISION.

DIMENSIONS:	mm
TOLERANCES UNLESS OTHERWISE SPECIFIED:	0 PLC ±- ; 1 PLC ±0.5 ; 2 PLC ±0.13 ; 3 PLC ±0.013 ; 4 PLC ±0.0001 ; ANGLES ±-
MATERIAL	-
FINISH	-
DWN	G.HOFFNER 12SEPT2011
CHK	G.BAILEY 13SEPT2011
APVD	G.BAILEY 13SEPT2011
PRODUCT SPEC	-
APPLICATION SPEC	-
WEIGHT	-
	TE Connectivity, Harrisburg, PA 17105-3608
NAME	Ocean Side Feed Applicator -
SIZE	A1
CAGE CODE	00779
DRAWING NO	C-2151495
RESTRICTED TO	-
SCALE	1:2
SHEET	3 OF 4
REV	A

CUSTOMER ACCESSIBLE PRODUCTION DRAWING

SHEETS 1 & 2 ARE NOT REQUIRED FOR PACIFIC VERSION

THIS DRAWING IS UNPUBLISHED. RELEASED FOR PUBLICATION 20
© COPYRIGHT 20 BY TYCO ELECTRONICS CORPORATION. ALL RIGHTS RESERVED.

LOC	DIST
A	66

REVISIONS

P	LTR	DESCRIPTION	DATE	DWN	APVD
	-	SEE SHEET 1	-	-	-

DIMENSIONING AND TOLERANCING PER ASME Y14.5M-2009

FEED TYPE

MECHANICAL

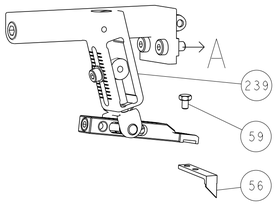

PNEUMATIC

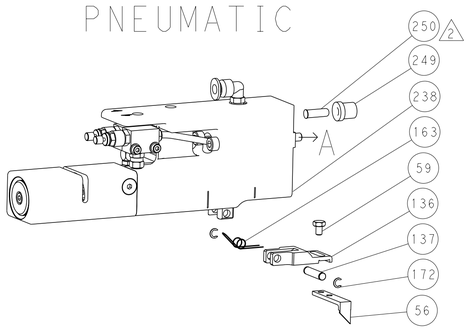

SERVO LATCH PLATE

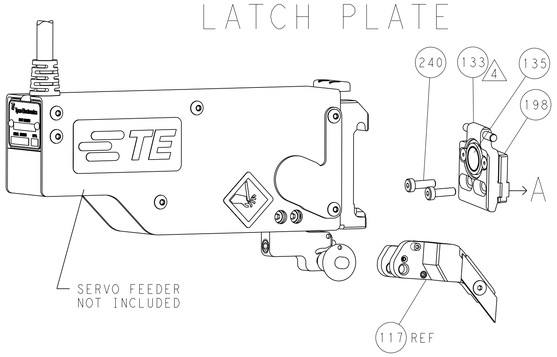

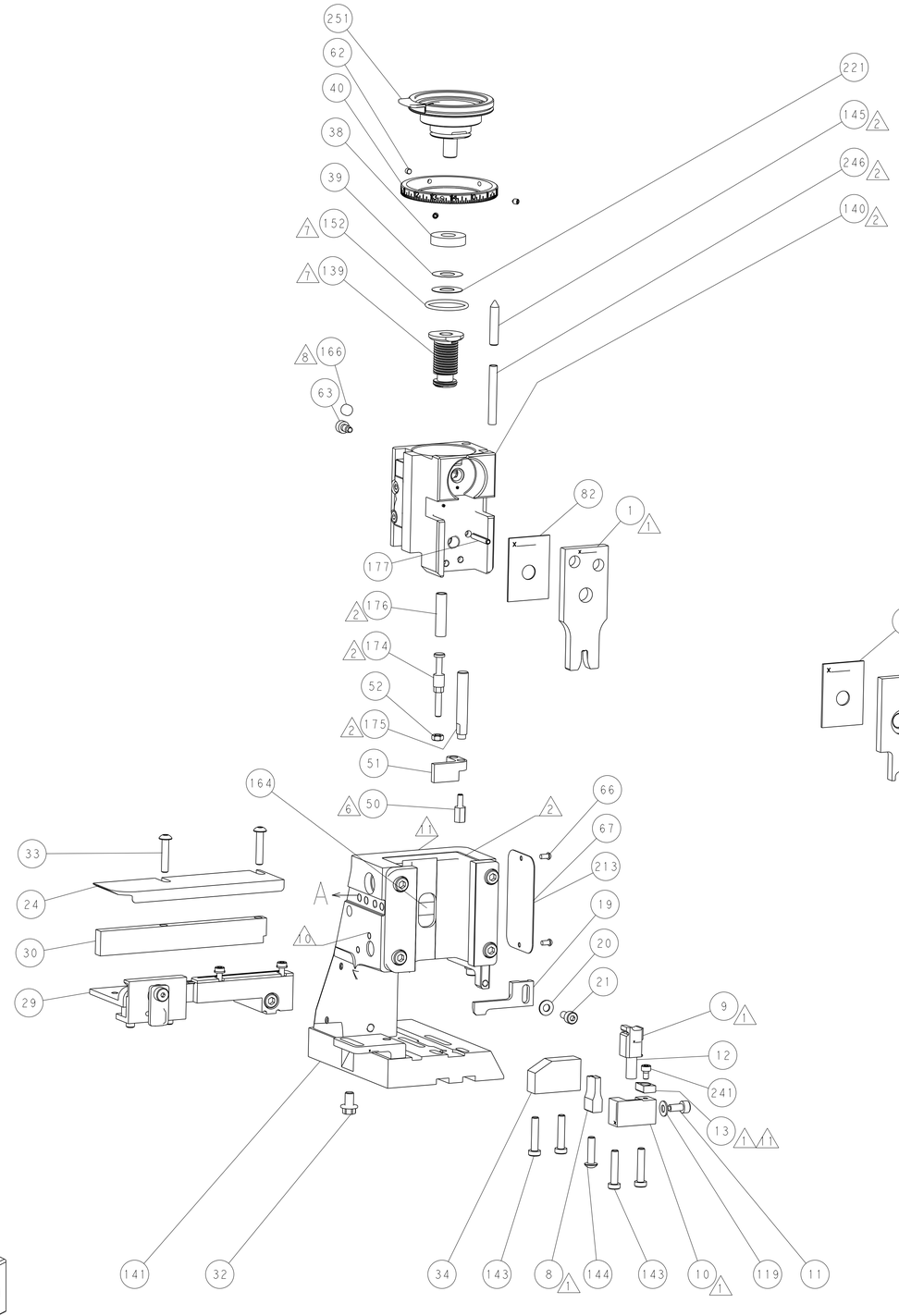

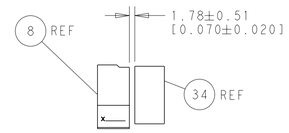

TERMINAL SUPPORT LOCATION

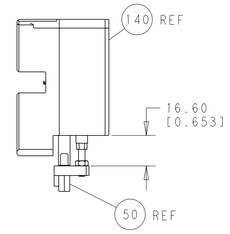

HOLDDOWN SET-UP

ITEM 30 LOCATED AT
FRONT HOLES

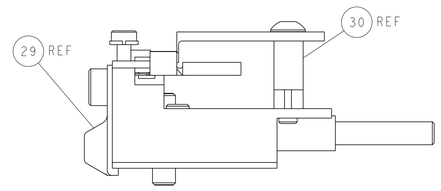

FEED TRACK POSITION
GUIDE BY WIRE BARREL

CAM POSITIONS

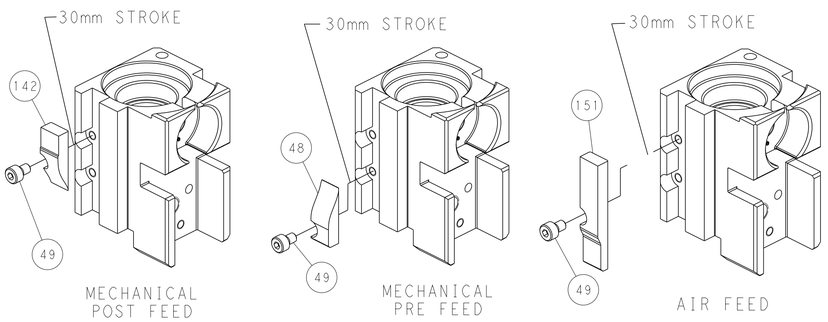

MECHANICAL
POST FEED

MECHANICAL
PRE FEED

AIR FEED

PACIFIC VERSION

Shown on sheets 3 of 4 & 4 of 4
(Atlantic version shown on sheets 1 of 4 & 2 of 4)

THIS DRAWING IS A CONTROLLED DOCUMENT FOR TYCO ELECTRONICS CORPORATION. IT IS SUBJECT TO CHANGE AND THE CONTROLLING ENGINEERING ORGANIZATION SHOULD BE CONTACTED FOR THE LATEST REVISION.

DIMENSIONS: mm

TOLERANCES UNLESS OTHERWISE SPECIFIED:
0 PLC ±-
1 PLC ±0.5
2 PLC ±0.13
3 PLC ±0.013
4 PLC ±0.0001
ANGLES ±-

MATERIAL - -
FINISH - -

DWN	G.HOFFNER	12SEPT2011
CHK	G.BAILEY	13SEPT2011
APVD	G.BAILEY	13SEPT2011
PRODUCT SPEC	-	
APPLICATION SPEC	-	
WEIGHT	-	

TE Connectivity
Harrisburg, PA 17105-3608

NAME: Ocean Side Feed Applicator -

SIZE	CAGE CODE	DRAWING NO	RESTRICTED TO
A1	00779	C-2151495	-

CUSTOMER ACCESSIBLE PRODUCTION DRAWING | SCALE 1:2 | SHEET 4 OF 4 | REV A

AMP 4805 REV 31MAR2000

SHEETS 1 & 2 ARE NOT REQUIRED FOR PACIFIC VERSION

Общество с ограниченной ответственностью «МосЧип» ИНН 7719860671 / КПП 771901001
Адрес: 105318, г.Москва, ул.Щербаковская д.3, офис 1107

Данный компонент на территории Российской Федерации

Вы можете приобрести в компании MosChip.

Для оперативного оформления запроса Вам необходимо перейти по данной ссылке:

http://moschip.ru/get-element

Вы можете разместить у нас заказ для любого Вашего проекта, будь то серийное производство или разработка единичного прибора.

В нашем ассортименте представлены ведущие мировые производители активных и пассивных электронных компонентов.

Нашей специализацией является поставка электронной компонентной базы двойного назначения, продукции таких производителей как XILINX, Intel (ex.ALTERA), Vicor, Microchip, Texas Instruments, Analog Devices, Mini-Circuits, Amphenol, Glenair.

Сотрудничество с глобальными дистрибьюторами электронных компонентов, предоставляет возможность заказывать и получать с международных складов практически любой перечень компонентов в оптимальные для Вас сроки.

На всех этапах разработки и производства наши партнеры могут получить квалифицированную поддержку опытных инженеров.

Система менеджмента качества компании отвечает требованиям в соответствии с ГОСТ Р ИСО 9001, ГОСТ РВ 0015-002 и ЭС РД 009

Офис по работе с юридическими лицами:

105318, г.Москва, ул.Щербаковская д.3, офис 1107, 1118, ДЦ «Щербаковский»

Телефон: +7 495 668-12-70 (многоканальный)

Факс: +7 495 668-12-70 (доб.304)

E-mail: info@moschip.ru

Skype отдела продаж:
moschip.ru
moschip.ru_4
moschip.ru_6
moschip.ru_9