SPECIFICATION FOR APPROVAL

Customer D P C

Description D C F A N

Part No. R E V.

Delta Model No. FFB03812VHN-9C3P REV. 01

Sample Issue No.

Sample Issue Date SEP.11.2009

PLEASE SEND ONE COPY OF THIS SPECIFICAITON BACK AFTER YOU SIGNED APPROVAL FOR PRODUCTION PRE-ARRANGMENT.

APPROVED BY:

DATE :

DELTA ELECTRONICS, INC.
TAOYUAN PLANT
252, SHANG YING ROAD, KUEI SAN INDUSTRIAL ZONE
TAOYUAN SHIEN, TAIWAN, R.O.C.
TEL:886-(0)3-3591968
FAX:886-(0)3-3591991

DELTA ELECTRONICS, INC.
252, SHANG YING ROAD, KUEI SAN
TAOYUAN HSIEN 333, TAIWAN , R.O.C.
TEL : 886-(0)3-3591968
FAX : 886-(0)3-3591991

SPECIFICATION FOR APPROVAL

****

Customer: DPC

Description: DC FAN

Customer P/N: REV:

Delta Model NO.: FFB03812VHN-9C3P

Sample Rev: 01 Issue NO:

Sample Issue Date: SEP.11.2009 Quantity:

1. SCOPE:

   THIS SPECIFICATION DEFINES THE ELECTRICAL AND MECHANICAL CHARACTERISTICS OF THE DC BRUSHLESS BLOWER.
   MOTOR IS WITH SINGLE PHASE AND EIGHT POLES.

2. CHARACTERISTICS:

ITEM	DESCRIPTION
RATED VOLTAGE	12 VDC
OPERATION VOLTAGE	10.8 – 13.2 VDC
INPUT CURRENT	0.55 (MAX. 0.66) A
INPUT POWER	6.60 (MAX 7.92) W
SPEED (REF.)	16000 RPM ± 10%
MAX. AIR FLOW (AT ZERO STATIC PRESSURE)	0.573(MIN. 0.516) M^3/MIN. 20.23 (MIN. 18.21) CFM
MAX. AIR PRESSURE (AT ZERO AIR FLOW)	37.15 (MIN. 30.09) mm H_2O 1.463 (MIN. 1.185) inch H_2O
ACOUSTICAL NOISE (AVG.)	58.5 (MAX. 62.5) dB-A
CURRENT ON LABEL	0.78 A

(continued)

PART NO:

DELTA MODEL: FFB03812VHN-9C3P

INSULATION STRENGTH	10 MEG OHM MIN. AT 500 VDC (BETWEEN FRAME AND (+) TERMINAL)
DIELECTRIC STRENGTH	5 mA MAX. AT 500 VAC 50/60 Hz ONE MINUTE, (BETWEEN FRAME AND (+) TERMINAL)
EXTERNAL COVER	OPEN TYPE
LIFE EXPECTANCE	50,000 HOURS CONTINUOUS OPERATION AT 40 °C WITH 15 ~ 65 %RH.
ROTATION	CLOCKWISE VIEW FROM NAME PLATE SIDE
OVER CURRENT SHUT DOWN	THE CURRENT WILL SHUT DOWN WHEN LOCKING ROTOR
LEAD WIRE	UL 1061 -F- AWG #26 BLACK WIRE NEGATIVE(-) RED WIRE POSITIVE(+) BLUE WIRE FREQUENCY(-F00) YELLOW WIRE (PWM)

NOTES:
1. ALL READINGS ARE MEASURED AFTER STABLY WARMING UP THROUGH 10 MINUTES.
2. THE VALUES WRITTEN IN PARENS , ( ), ARE LIMITED SPEC.
3. ACOUSTICAL NOISE MEASURING CONDITION:

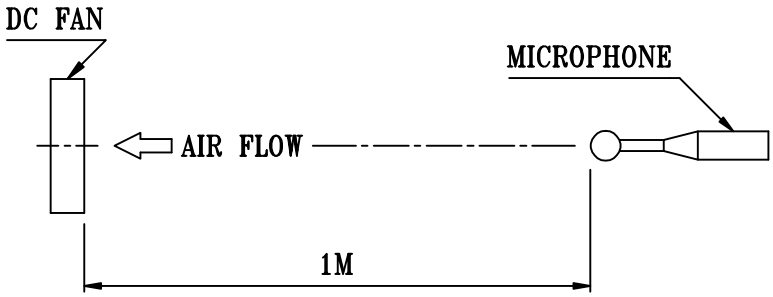

NOISE IS MEASURED AT RATED VOLTAGE IN FREE AIR IN ANECHOIC CHAMBER WITH B & K SOUND LEVEL METER WITH MICROPHONE AT A DISTANCE OF ONE METER FROM THE FAN INTAKE.

3. MECHANICAL:

3-1. DIMENSIONS ---------- SEE DIMENSIONS DRAWING

3-2. FRAME ---------- PLASTIC UL: 94V-0

3-3. IMPELLER ---------- PLASTIC UL: 94V-0

3-4. BEARING SYSTEM ---------- TWO BALL BEARINGS

3-5. WEIGHT ---------- 46 GRAMS

4. ENVIRONMENTAL:

4-1. OPERATING TEMPERATURE ---------- -10 TO +60 DEGREE C

4-2. STORAGE TEMPERATURE ---------- -40 TO +75 DEGREE C

4-3. OPERATING HUMIDITY ---------- 5 TO 90 % RH

4-4. STORAGE HUMIDITY ---------- 5 TO 95 % RH

5. PROTECTION:

5-1. LOCKED ROTOR PROTECTION

IMPEDANCE OF MOTOR WINDING PROTECTS MOTOR FROM FIRE IN 96 HOURS OF LOCKED ROTOR CONDITION AT THE RATED VOLTAGE.

5-2. POLARITY PROTECTION

BE CAPABLE OF WITHSTANDING IF REVERSE CONNECTION FOR POSITIVE AND NEGATIVE LEADS.

6. RE OZONE DEPLETING SUBSTANCES:

6-1. NO CONTAINING PBBs, PBBOs, CFCs, PBBEs, PBDPEs AND HCFCs.

7. PRODUCTION LOCATION

7-1. PRODUCTS WILL BE PRODUCED IN CHINA OR THAILAND OR TAIWAN.

PART NO:

DELTA MODEL: FFB03812VHN-9C3P

8. P & Q CURVE:

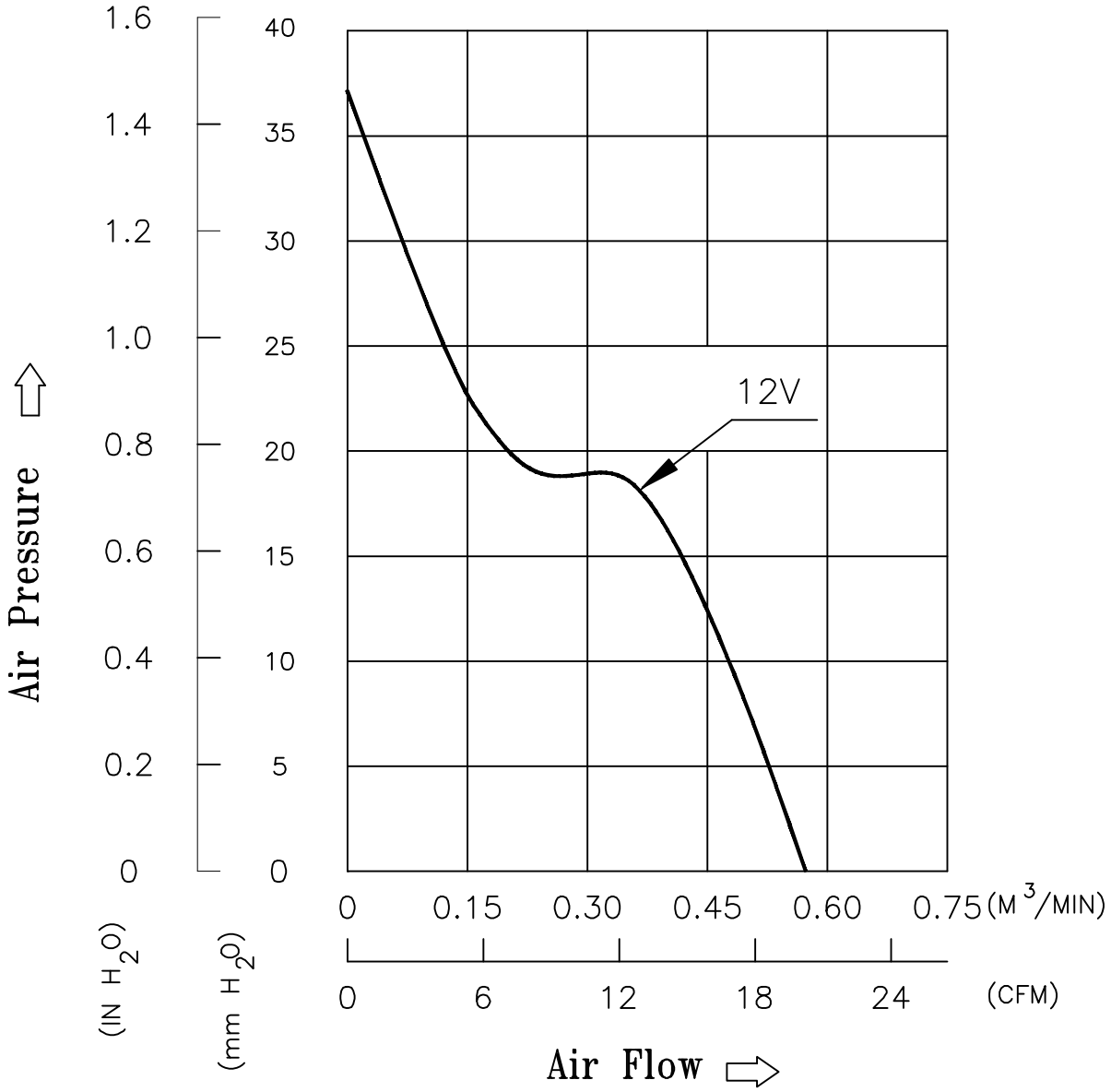

* TEST CONDITION: INPUT VOLTAGE ----- OPERATION VOLTAGE
TEMPERATURE ------ ROOM TEMPERATURE
HUMIDITY --------- 65%RH

A00

PART NO:

DELTA MODEL: FFB03812VHN-9C3P

9.DIMENSION DRAWING:

LABEL:

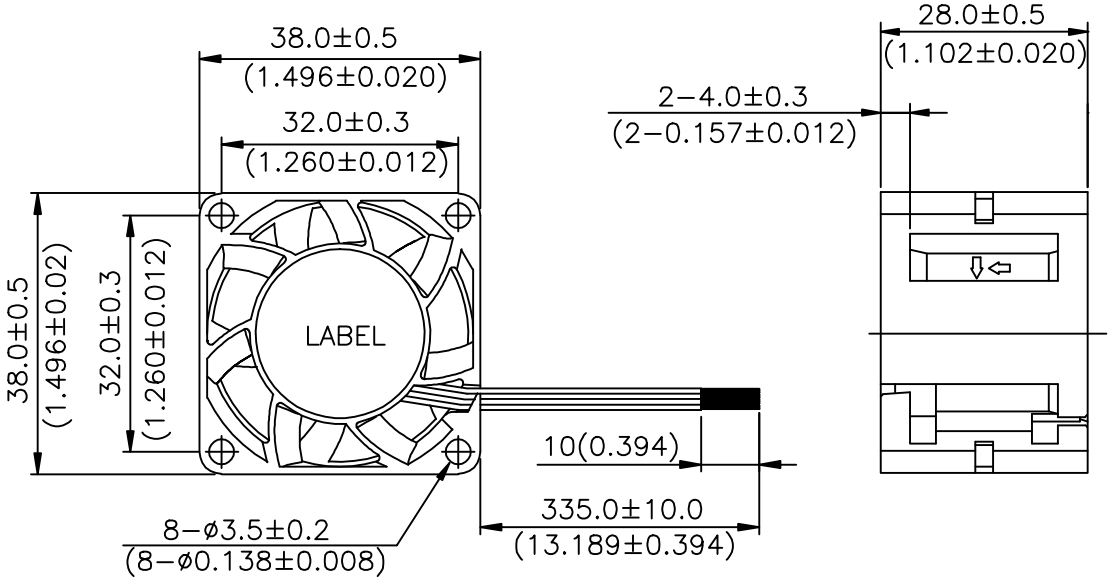

NOTES:

1. THIS PRODUCT IS RoHS COMPLIANT

2. LEAD WIRE UL 1061 -F- AWG #26
   RED WIRE POSITIVE(+)
   BLACK WIRE NEGATIVE(-)
   BLUE WIRE FREQUENCY(-F00)
   YELLOW WIRE SPEED CONTROL(PWM)

10. FREQUENCY GENERATOR (FG) SIGNAL:

10-1. OUTPUT CIRCUIT - OPEN COLLECTOR MODE:

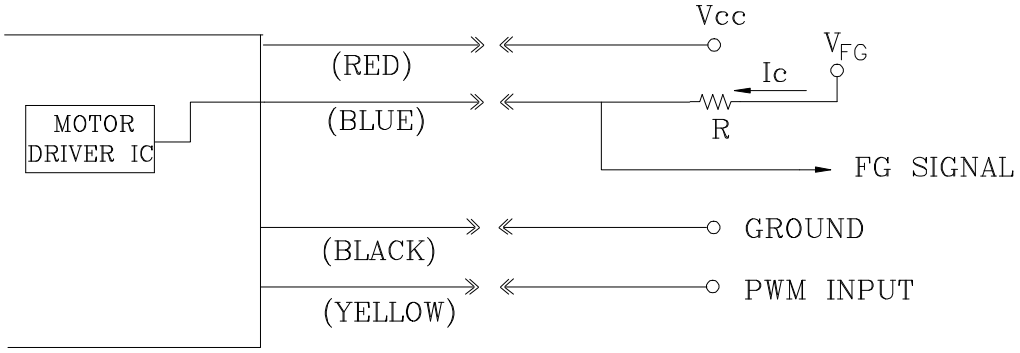

REMARK: TVS VOLTAGE DEFINE BY FACTORY.

"+" LEAD WIRE & "−" LEAD WIRE.

10-2. SPECIFICATION:

V_{CE}(sat)=0.5V MAX V_{FG}=13.2V (MAX.)

I_C =2.5mA MAX. $R \geq V_{FG}/I_C$

10-3. FREQUENCY GENERATOR WAVEFORM:

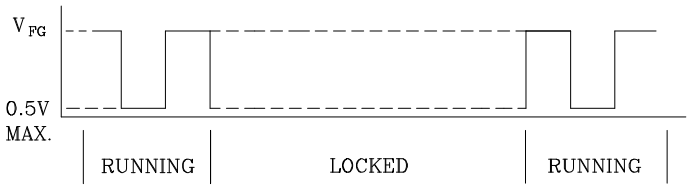

FAN RUNNING FOR 8 POLES MOTOR
4 PULSES WAVEFORM OUTPUT

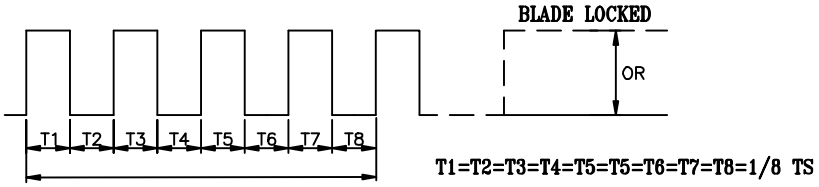

N=R.P.M
TS=60/N(SEC)
***VOLTAGE LEVEL AFTER BLADE LOCKED**
***8 POLES**

11. PWM CONTROL SIGNAL:

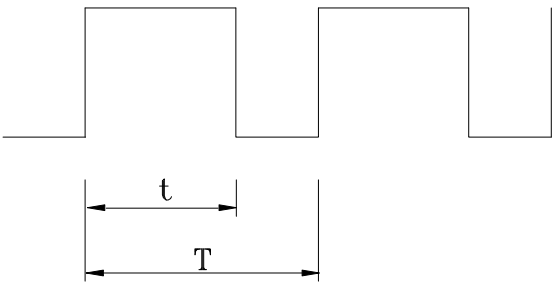

HIGH SIGNAL: 13.2VDC MAX.
3.3VDC MIN.

LOW SIGNAL: 0.8VDC MAX.
0 VDC MIN.

DUTY CYCLE= $\frac{t}{T}$ *100(%)

- THE FREQUENCY FOR CONTROL SIGNAL OF THE FAN SHALL BE ABLE TO ACCEPT A 20KHZ.
- AT 0% DUTY CYCLE,THE ROTOR WILL STOP.
- AT 100% DUTY CYCLE,THE ROTOR WILL SPIN AT MAXIMUM SPEED.
- WITH CONTROL SIGNAL LEAD DISCONNECTED,THE FAN WILL SPIN AT MAXIMUM SPEED.

12-1. SPEED VS PWM CONTROL SIGNAL:
(DC12V & TEMERATURE 25°C & FREQUENCY: 20KHZ)

DUTY CYCLE (%)	SPEED R.P.M. (REF.)
100	16000±1600
75	8800±1000
50	5300±1000
25	1800±1000
<17	0

Application Notice

1. Delta will not guarantee the performance of the products if the application condition falls outside the parameters set forth in the specification.
2. A written request should be submitted to Delta prior to approval if deviation from this specification is required.
3. Please exercise caution when handling fans. Damage may be caused when pressure is applied to the impeller, if the fans are handled by the lead wires, or if the fan was hard-dropped to the production floor.
4. Except as pertains to some special designs, there is no guarantee that the products will be free from any such safety problems or failures as caused by the introduction of powder, droplets of water or encroachment of insect into the hub.
5. The above-mentioned conditions are representative of some unique examples and viewed as the first point of reference prior to all other information.
6. It is very important to establish the correct polarity before connecting the fan to the power source. Positive (+) and Negative (-). Damage may be caused to the fans if connection is with reverse polarity, if there is no foolproof method to protect against such error specifically mentioned in this spec.
7. Delta fans without special protection are not suitable where any corrosive fluids are introduced to their environment.
8. Please ensure all fans are stored according to the storage temperature limits specified. Do not store fans in a high humidity environment. We highly recommend performance testing is conducted before shipping, if the fans have been stored over 6 months.
9. Not all fans are provided with the Lock Rotor Protection feature. If you impair the rotation of the impeller for the fans that do not have this function, the performance of those fans will lead to failure.
10. Please be cautious when mounting the fan. Incorrect mounting of fans may cause excess resonance, vibration and subsequent noise.
11. It is important to consider safety when testing the fans. A suitable fan guard should be fitted to the fan to guard against any potential for personal injury.
12. Except where specifically stated, all tests are carried out at room (ambient) temperature and relative humidity conditions of 25°C, 65% RH. The test value is only for fan performance itself.
13. Be certain to connect an " 4.7µF or greater" capacitor to the fan externally when the application calls for using multiple fans in parallel, to avoid any unstable power.

Общество с ограниченной ответственностью «МосЧип» ИНН 7719860671 / КПП 771901001
Адрес: 105318, г.Москва, ул.Щербаковская д.3, офис 1107

Данный компонент на территории Российской Федерации

Вы можете приобрести в компании MosChip.

Для оперативного оформления запроса Вам необходимо перейти по данной ссылке:

http://moschip.ru/get-element

Вы можете разместить у нас заказ для любого Вашего проекта, будь то серийное производство или разработка единичного прибора.

В нашем ассортименте представлены ведущие мировые производители активных и пассивных электронных компонентов.

Нашей специализацией является поставка электронной компонентной базы двойного назначения, продукции таких производителей как XILINX, Intel (ex.ALTERA), Vicor, Microchip, Texas Instruments, Analog Devices, Mini-Circuits, Amphenol, Glenair.

Сотрудничество с глобальными дистрибьюторами электронных компонентов, предоставляет возможность заказывать и получать с международных складов практически любой перечень компонентов в оптимальные для Вас сроки.

На всех этапах разработки и производства наши партнеры могут получить квалифицированную поддержку опытных инженеров.

Система менеджмента качества компании отвечает требованиям в соответствии с ГОСТ Р ИСО 9001, ГОСТ РВ 0015-002 и ЭС РД 009

Офис по работе с юридическими лицами:

105318, г.Москва, ул.Щербаковская д.3, офис 1107, 1118, ДЦ «Щербаковский»

Телефон: +7 495 668-12-70 (многоканальный)

Факс: +7 495 668-12-70 (доб.304)

E-mail: info@moschip.ru

Skype отдела продаж:
moschip.ru
moschip.ru_4
moschip.ru_6
moschip.ru_9