DATA SHEET

For a complete data sheet, please also download:

- The IC06 74HC/HCT/HCU/HCMOS Logic Family Specifications
- The IC06 74HC/HCT/HCU/HCMOS Logic Package Information
- The IC06 74HC/HCT/HCU/HCMOS Logic Package Outlines

74HC/HCT4511
BCD to 7-segment latch/decoder/driver

Product specification
File under Integrated Circuits, IC06

December 1990

Philips Semiconductors

PHILIPS

BCD to 7-segment latch/decoder/driver 74HC/HCT4511

FEATURES

- Latch storage of BCD inputs
- Blanking input
- Lamp test input
- Driving common cathode LED displays
- Guaranteed 10 mA drive capability per output
- Output capability: non-standard
- I_{CC} category: MSI

GENERAL DESCRIPTION

The 74HC/HCT4511 are high-speed Si-gate CMOS devices and are pin compatible with “4511” of the “4000B” series. They are specified in compliance with JEDEC standard no. 7A.

The 74HC/HCT4511 are BCD to 7-segment latch/decoder/drivers with four address inputs (D_1 to D_4), an active LOW latch enable input ($\overline{LE}$), an active LOW ripple blanking input ($\overline{BI}$), an active LOW lamp test input ($\overline{LT}$), and seven active HIGH segment outputs (Q_a to Q_g).

When $\overline{LE}$ is LOW, the state of the segment outputs (Q_a to Q_g) is determined by the data on D_1 to D_4.
When $\overline{LE}$ goes HIGH, the last data present on D_1 to D_4 are stored in the latches and the segment outputs remain stable.
When $\overline{LT}$ is LOW, all the segment outputs are HIGH independent of all other input conditions. With $\overline{LT}$ HIGH, a LOW on $\overline{BI}$ forces all segment outputs LOW. The inputs $\overline{LT}$ and $\overline{BI}$ do not affect the latch circuit.

APPLICATIONS

- Driving LED displays
- Driving incandescent displays
- Driving fluorescent displays
- Driving LCD displays
- Driving gas discharge displays

QUICK REFERENCE DATA

GND = 0 V; T_{amb} = 25 °C; $t_r = t_f$ = 6 ns

SYMBOL	PARAMETER	CONDITIONS	TYPICAL		UNIT
			HC	HCT	
t_{PHL}/ t_{PLH}	propagation delay	C_L = 15 pF; V_{CC} = 5 V			
	D_n to Q_n		24	24	ns
	$\overline{LE}$ to Q_n		23	24	ns
	$\overline{BI}$ to Q_n		19	20	ns
	$\overline{LT}$ to Q_n		12	13	ns
C_I	input capacitance		3.5	3.5	pF
C_{PD}	power dissipation capacitance per latch	notes 1 and 2	64	64	pF

Notes

1. C_{PD} is used to determine the dynamic power dissipation (P_D in μW):

   $P_D = C_{PD} \times V_{CC}^2 \times f_i + \sum (C_L \times V_{CC}^2 \times f_o)$ where:

   f_i = input frequency in MHz

   f_o = output frequency in MHz

   $\sum (C_L \times V_{CC}^2 \times f_o)$ = sum of outputs

   C_L = output load capacitance in pF

   V_{CC} = supply voltage in V
2. For HC the condition is V_I = GND to V_{CC}

   For HCT the condition is V_I = GND to V_{CC} – 1.5 V

ORDERING INFORMATION

See *"74HC/HCT/HCU/HCMOS Logic Package Information"*.

PIN DESCRIPTION

PIN NO.	SYMBOL	NAME AND FUNCTION
3	$\overline{LT}$	lamp test input (active LOW)
4	$\overline{BI}$	ripple blanking input (active LOW)
5	$\overline{LE}$	latch enable input (active LOW)
7, 1, 2, 6	D_1 to D_4	BCD address inputs
8	GND	ground (0 V)
13, 12, 11, 10, 9, 15, 14	Q_a to Q_g	segments outputs
16	V_{CC}	positive supply voltage

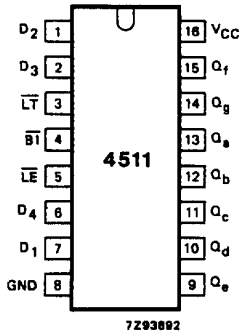

Fig.1 Pin configuration.

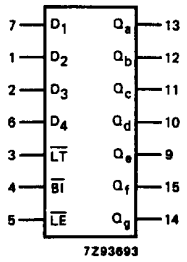

Fig.2 Logic symbol.

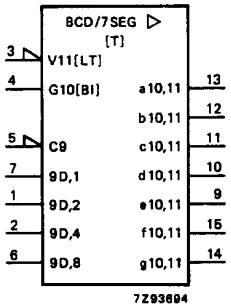

Fig.3 IEC logic symbol.

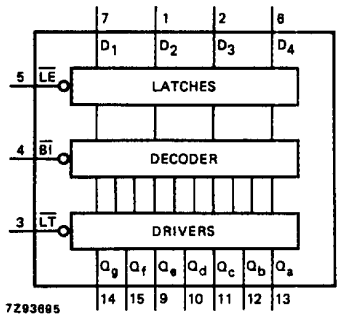

Fig.4 Functional diagram.

FUNCTION TABLE

INPUTS							OUTPUTS							DISPLAY
$\overline{LE}$	$\overline{BI}$	$\overline{LT}$	D_4	D_3	D_2	D_1	Q_a	Q_b	Q_c	Q_d	Q_e	Q_f	Q_g	
X	X	L	X	X	X	X	H	H	H	H	H	H	H	8
X	L	H	X	X	X	X	L	L	L	L	L	L	L	blank
L	H	H	L	L	L	L	H	H	H	H	H	H	L	0
L	H	H	L	L	L	H	L	H	H	L	L	L	L	1
L	H	H	L	L	H	L	H	H	L	H	H	L	H	2
L	H	H	L	L	H	H	H	H	H	H	L	L	H	3
L	H	H	L	H	L	L	L	H	H	L	L	H	H	4
L	H	H	L	H	L	H	H	L	H	H	L	H	H	5
L	H	H	L	H	H	L	L	L	H	H	H	H	H	6
L	H	H	L	H	H	H	H	H	H	L	L	L	L	7
L	H	H	H	L	L	L	H	H	H	H	H	H	H	8
L	H	H	H	L	L	H	H	H	H	L	L	H	H	9
L	H	H	H	L	H	L	L	L	L	L	L	L	L	blank
L	H	H	H	L	H	H	L	L	L	L	L	L	L	blank
L	H	H	H	H	L	L	L	L	L	L	L	L	L	blank
L	H	H	H	H	L	H	L	L	L	L	L	L	L	blank
L	H	H	H	H	H	L	L	L	L	L	L	L	L	blank
L	H	H	H	H	H	H	L	L	L	L	L	L	L	blank
H	H	H	X	X	X	X	(1)							(1)

Note

1. Depends upon the BCD-code applied during the LOW-to-HIGH transition of $\overline{LE}$.
   H = HIGH voltage level
   L = LOW voltage level
   X = don't care

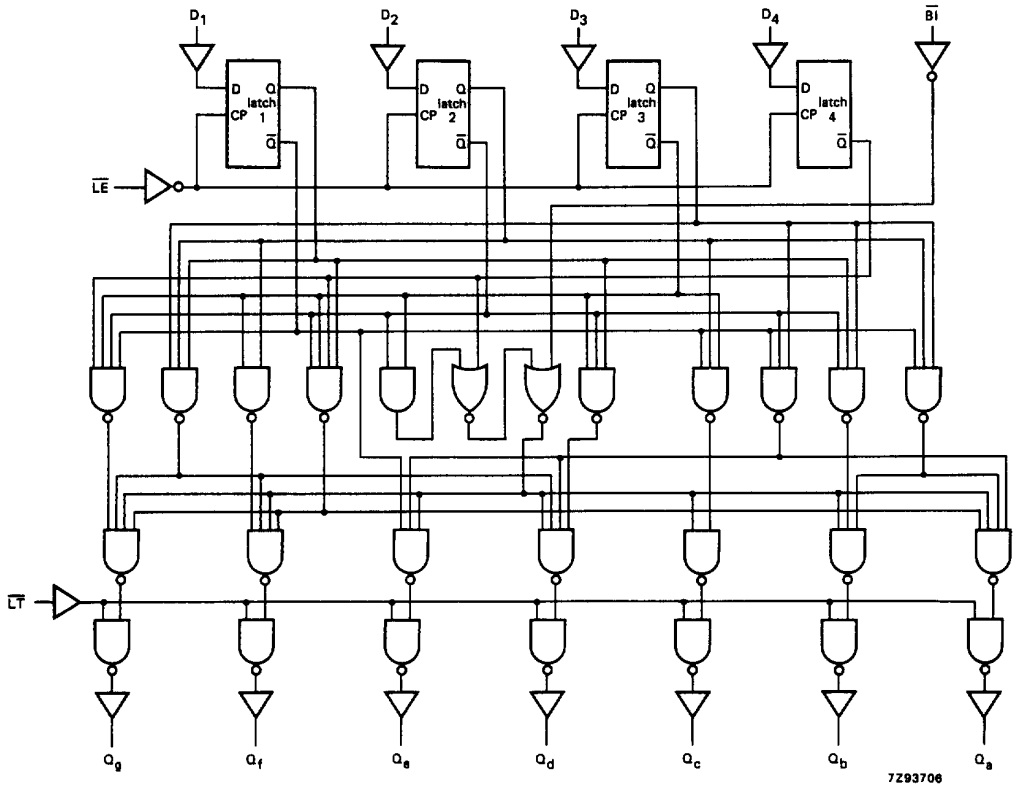

Fig.5 Logic diagram.

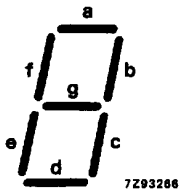

Fig.6 Segment designation.

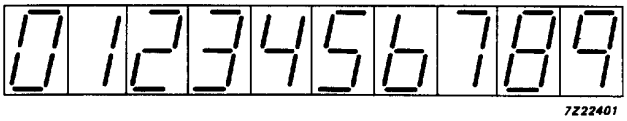

Fig.7 Display.

DC CHARACTERISTICS FOR 74HC

For the DC characteristics see *"74HC/HCT/HCU/HCMOS Logic Family Specifications"*.

Output capability: standard, excepting V_{OH} which is given below
I_{CC} category: MSI

Non-standard DC characteristics for 74HC

Voltages are referenced to GND (ground = 0 V)

SYMBOL	PARAMETER	T_{amb} (°C)							UNIT	TEST CONDITIONS		
		74HC										
		+25			−40 to +85		−40 to +125			V_{CC} (V)	V_I	$-I_O$ (mA)
		min.	typ.	max.	min.	max.	min.	max.				
V_{OH}	HIGH level output voltage	3.98 3.60			3.84 3.35		3.70 3.10		V	4.5	V_{IH} or V_{IL}	7.5 10.0
V_{OH}	HIGH level output voltage	5.60 5.48 4.80			5.45 5.34 4.50		5.35 5.20 4.20		V	6.0	V_{IH} or V_{IL}	7.5 10.0 15.0

AC CHARACTERISTICS FOR 74HC

GND = 0 V; $t_r = t_f = 6$ ns; $C_L = 50$ pF

SYMBOL	PARAMETER	T_{amb} (°C)							UNIT	TEST CONDITIONS	
		74HC								V_{CC} (V)	WAVEFORMS
		+25			−40 to +85		−40 to +125				
		min.	typ.	max.	min.	max.	min.	max.			
t_{PHL}/ t_{PLH}	propagation delay D_n to Q_n		77 28 22	300 60 51		375 75 64		450 90 77	ns	2.0 4.5 6.0	Fig.8
t_{PHL}/ t_{PLH}	propagation delay $\overline{LE}$ to Q_n		74 27 22	270 54 46		330 68 58		405 81 69	ns	2.0 4.5 6.0	Fig.9
t_{PHL}/ t_{PLH}	propagation delay $\overline{BI}$ to Q_n		61 22 18	220 44 37		275 55 47		330 66 56	ns	2.0 4.5 6.0	Fig.10
t_{PHL}/ t_{PLH}	propagation delay $\overline{LT}$ to Q_n		41 15 12	150 30 26		190 38 33		225 45 38	ns	2.0 4.5 6.0	Fig.8
t_{THL}/ t_{TLH}	output transition time		19 7 6	75 15 13		95 19 16		110 22 19	ns	2.0 4.5 6.0	Figs 8, 9 and 10
t_W	latch enable pulse width LOW	80 16 14	11 4 3		100 20 17		120 24 20		ns	2.0 4.5 6.0	Fig.9
t_{su}	set-up time D_n to $\overline{LE}$	60 12 10	14 5 4		75 15 13		90 18 15		ns	2.0 4.5 6.0	Fig.11
t_h	hold time D_n to $\overline{LE}$	0 0 0	−11 −4 −3		0 0 0		0 0 0		ns	2.0 4.5 6.0	Fig.11

DC CHARACTERISTICS FOR 74HCT

For the DC characteristics see *"74HC/HCT/HCU/HCMOS Logic Family Specifications"*.

Output capability: standard, excepting V_{OH} which is given below
I_{CC} category: MSI

Non-standard DC characteristics for 74HCT

Voltages are referenced to GND (ground = 0 V)

SYMBOL	PARAMETER	T_{amb} (°C)							UNIT	TEST CONDITIONS		
		74HCT										
		+25			−40 to +85		−40 to +125			V_{CC} (V)	V_I	$-I_O$ (mA)
		min.	typ.	max.	min.	max.	min.	max.				
V_{OH}	HIGH level output voltage	3.98 3.60			3.84 3.35		3.70 3.10		V	4.5	V_{IH} or V_{IL}	7.5 10.0

Note to HCT types

The value of additional quiescent supply current (ΔI_{CC}) for a unit load of 1 is given in the family specifications.
To determine ΔI_{CC} per input, multiply this value by the unit load coefficient shown in the table below.

INPUT	UNIT LOAD COEFFICIENT
$\overline{LT}$, $\overline{LE}$	1.50
$\overline{BI}$, D_n	0.30

AC CHARACTERISTICS FOR 74HCT

GND = 0 V; $t_r = t_f = 6$ ns; $C_L = 50$ pF

SYMBOL	PARAMETER	T_{amb} (°C)							UNIT	TEST CONDITIONS	
		74HCT								V_{CC} (V)	WAVEFORMS
		+25			−40 to +85		−40 to +125				
		min.	typ.	max.	min.	max.	min.	max.			
t_{PHL}/ t_{PLH}	propagation delay D_n to Q_n		28	60		75		90	ns	4.5	Fig.8
t_{PHL}/ t_{PLH}	propagation delay $\overline{LE}$ to Q_n		27	54		68		81	ns	4.5	Fig.9
t_{PHL}/ t_{PLH}	propagation delay $\overline{BI}$ to Q_n		23	44		55		66	ns	4.5	Fig.10
t_{PHL}/ t_{PLH}	propagation delay $\overline{LT}$ to Q_n		16	30		38		45	ns	4.5	Fig.8
t_{THL}/ t_{TLH}	output transition time		7	15		19		22	ns	4.5	Figs 8, 9 and 10
t_W	latch enable pulse width LOW	16	5		20		24		ns	4.5	Fig.9
t_{su}	set-up time D_n to $\overline{LE}$	12	5		15		18		ns	4.5	Fig.11
t_h	hold time D_n to $\overline{LE}$	0	−4		0		0		ns	4.5	Fig.11

AC WAVEFORMS

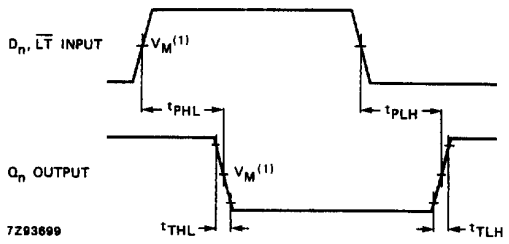

(1) HC : V_M = 50%; V_I = GND to V_{CC}.
HCT: V_M = 1.3 V; V_I = GND to 3 V.

Fig.8 Waveforms showing the input (D_n, $\overline{LT}$) to output (Q_n) propagation delays and the output transition times.

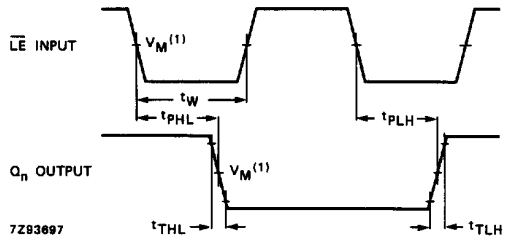

(1) HC : V_M = 50%; V_I = GND to V_{CC}.
HCT: V_M = 1.3 V; V_I = GND to 3 V.

Fig.9 Waveforms showing the input ($\overline{LE}$) to output (Q_n) propagation delays and the latch enable pulse width.

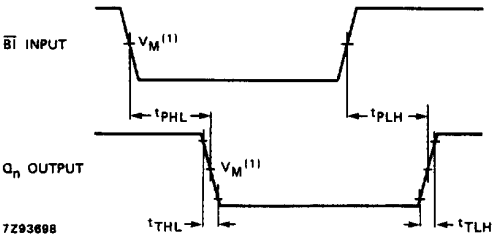

(1) HC : V_M = 50%; V_I = GND to V_{CC}.
HCT: V_M = 1.3 V; V_I = GND to 3 V.

Fig.10 Waveforms showing the input ($\overline{BI}$) to output (Q_n) propagation delays.

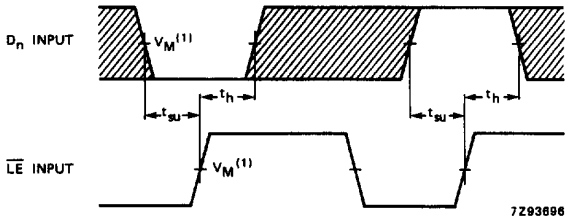

The shaded areas indicate when the input is permitted to change for predictable output performance.

(1) HC : V_M = 50%; V_I = GND to V_{CC}.
HCT: V_M = 1.3 V; V_I = GND to 3 V.

Fig.11 Waveforms showing the data set-up and hold times for D_n input to $\overline{LE}$ input.

APPLICATION DIAGRAMS

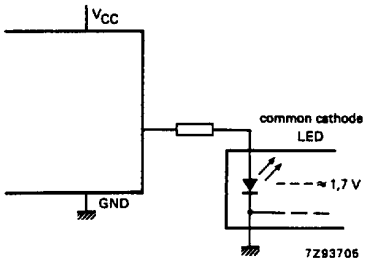

Fig.12 Connection to common cathode LED display readout.

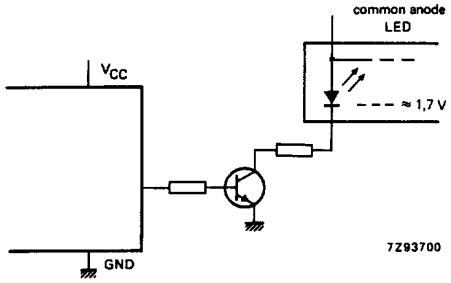

Fig.13 Connection to common anode LED display readout.

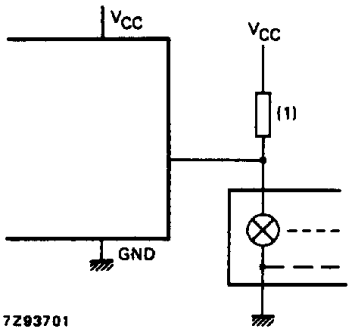

(1) A filament pre-warm resistor to reduce thermal shock and to increase effective cold resistance of the filament is recommended.

Fig.14 Connection to incandescent display readout.

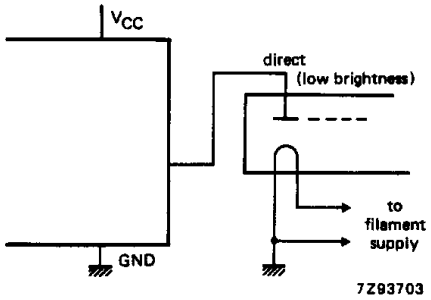

Fig.15 Connection to fluorescent display readout.

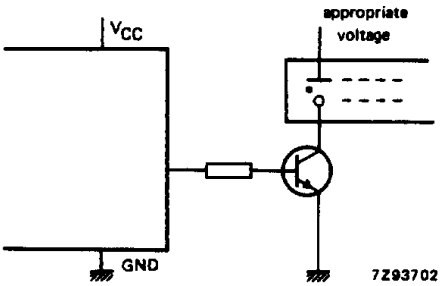

Fig.16 Connection to gas discharge display readout.

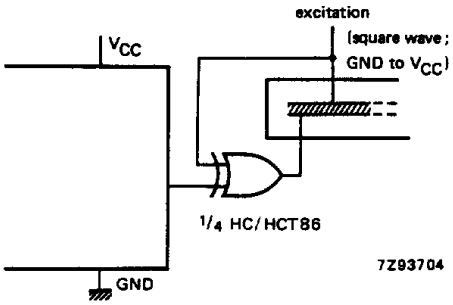

Fig.17 Connection to LCD display readout. (Direct DC drive is not recommended as it can shorten the life of LCD displays).

PACKAGE OUTLINES

See *"74HC/HCT/HCU/HCMOS Logic Package Outlines"*.

Общество с ограниченной ответственностью «МосЧип» ИНН 7719860671 / КПП 771901001
Адрес: 105318, г.Москва, ул.Щербаковская д.3, офис 1107

Данный компонент на территории Российской Федерации

Вы можете приобрести в компании MosChip.

Для оперативного оформления запроса Вам необходимо перейти по данной ссылке:

http://moschip.ru/get-element

Вы можете разместить у нас заказ для любого Вашего проекта, будь то серийное производство или разработка единичного прибора.

В нашем ассортименте представлены ведущие мировые производители активных и пассивных электронных компонентов.

Нашей специализацией является поставка электронной компонентной базы двойного назначения, продукции таких производителей как XILINX, Intel (ex.ALTERA), Vicor, Microchip, Texas Instruments, Analog Devices, Mini-Circuits, Amphenol, Glenair.

Сотрудничество с глобальными дистрибьюторами электронных компонентов, предоставляет возможность заказывать и получать с международных складов практически любой перечень компонентов в оптимальные для Вас сроки.

На всех этапах разработки и производства наши партнеры могут получить квалифицированную поддержку опытных инженеров.

Система менеджмента качества компании отвечает требованиям в соответствии с ГОСТ Р ИСО 9001, ГОСТ РВ 0015-002 и ЭС РД 009

Офис по работе с юридическими лицами:

105318, г.Москва, ул.Щербаковская д.3, офис 1107, 1118, ДЦ «Щербаковский»

Телефон: +7 495 668-12-70 (многоканальный)

Факс: +7 495 668-12-70 (доб.304)

E-mail: info@moschip.ru

Skype отдела продаж:
moschip.ru
moschip.ru_4
moschip.ru_6
moschip.ru_9