SEMTECH

TSDMTX-19V3-EVM
Wireless Charging Transmitter

WIRELESS CHARGING

User Guide

LinkCharge™ 20 Series Wireless Charging (Rev3.0) Transmitter

Introduction

The Semtech TSDMTX-19V3-EVM is an evaluation platform for test and experimentation of a wireless charging transmitter based on the Semtech TS80003 Wireless Power Transmitter Controller, TS61002 FET Driver, TS30011 DC/DC Converter, and TS94033 Current Sense Amplifier. This evaluation module provides a complete system solution and is compatible with the Wireless Power Consortium (WPC) or Qi standards of power transmission, making this transmitter an ideal platform for powering the majority of wireless receivers in use today.

Objectives

The objective of this User Guide is to provide a fast, easy and thorough method to Fully testt and evaluate the Semtech solutions for wireless charging systems. Sufficient information is provided to support the engineer in all aspects of adding wireless charging support to their products. Semtech offers a range of solutions to meet the needs of a wide range of system developers. Developers are provided with all the information on how this EVM was built as a starting point for their own designs using the TS80003 and other Semtech components.

Features

- 19V Input / 20W Output Power
- WPC1.2.2 compliant
- Supports faster charging
- Supports up to 15W output power with WPC1.2 receivers
- Supports up to 20W output power with Semtech receivers

Please make sure to download the latest software visit www.semtech.com/wireless-charging to download the latest EVM software for your evaluation board

Table of Contents

Wireless Charging Concepts ***2***

Product Description ***3***

Standard Use ***5***

Firmware Management ***10***

FOD Test ***14***

Documentation ***15***

A. Block Diagram 15
B. Schematic 16
C. Bill Of Materials “BOM” 19
D. Board Layout 20
E. Board Layers 21

FAQs ***25***

Next Steps ***26***

Wireless Charging Concepts

Wireless power transfer is, essentially, a transformer. Current is provided to a primary coil which produces an electromagnetic (EM) field. In this field, a secondary coil is placed. The EM field induces a current into the secondary coil, providing power to whatever it is connected to.

However, unlike a conventional power transformer that operates at line frequencies and requires an iron core for efficiency, wireless power systems are designed to operate in the 100 kHz range, and thus can perform efficiently with an air core. As such, the primary and secondary windings, if closely spaced, can be in separate devices, the primary being part of a transmitter and the secondary within a receiver. This implementation can also be described as a radio broadcast process, and as such, these transformer coils can also be seen as antennas with equal validity, and the two terms will be used interchangeably in this text.

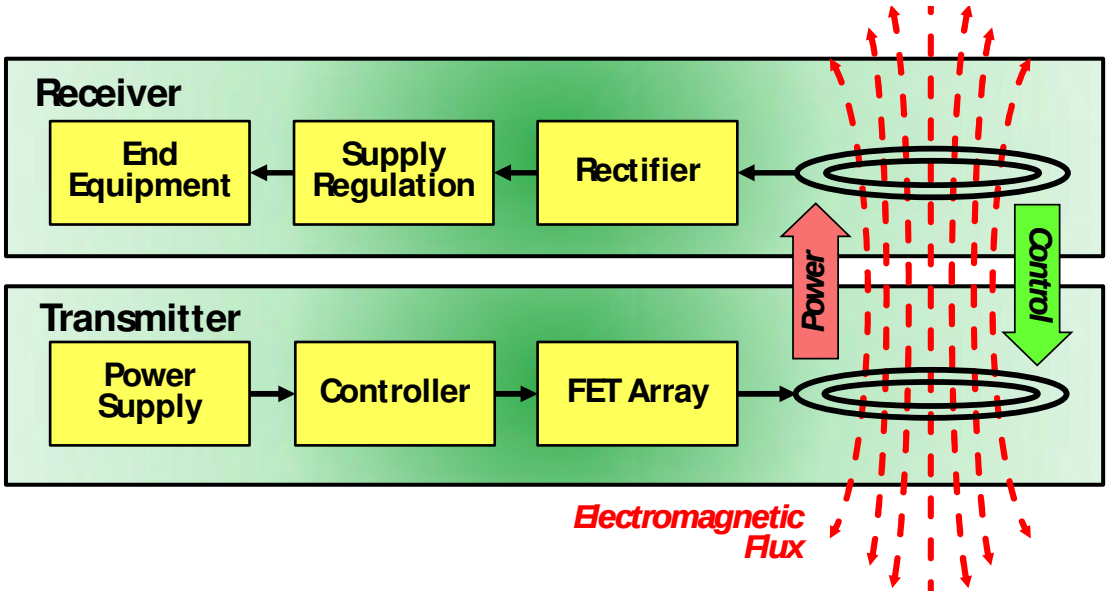

Wireless power systems differ in another major aspect from conventional transformers, in that they are intelligently managed. A transmitter will only provide power when a receiver is present, and only produce the amount of power requested by the receiver. In addition, the system is capable of recognizing when the electromagnetic field has been interrupted by an unintended element, a 'foreign object', and will shut down the transfer to prevent any significant amount of power being absorbed by anything but a proper receiver. The intelligent management of the wireless power transmission process is achieved though the programming of the TS80003, which first searches for a receiver. Once found, the receiver informs the transmitter of its power requirements, and transmission begins. The system then verifies the right amount of power being sent, and that no power is being lost to foreign objects. The receiver will continually provide ongoing requests for power to maintain the transaction. If the requests cease, the transaction terminates. Via this protocol, even complex charging patterns can be supported, as the transmitter can provide varying amounts of power at different times, as requested by the receiver. If the receiver requires no further power, such as when a battery is fully charged, it can request no further power being sent, and the transmitter will reduce its output accordingly.

Wireless power systems have been broken into three power categories. “Wearable” devices, such as headsets, wrist-band devices, medical sensors etc - operate in the low power range, up to 3 watts. Medium power devices, in the 5- to 15-watt range, include handheld devices, such as cell phones, tablets, and medical electronics. High power systems support devices such as power tools, radio controlled (“RC”) devices such as drones, and other equipments requiring 15 to 100 watts of power.

Product Description

The TSDMTX-19V3-EVM Evaluation Module is a ready-to-use demonstration platform allowing testing of up to 15 watts of wireless power transmission compliant with the dominant industry WPC/Qi standard.

The transmitter may be coupled with any Qi receiver module to form a complete wireless power transmission system. For the system designer, a likely choice might be the complementary Semtech TSDMRX-19V/20W-EVM, which can allow a variety of experiments to easily be performed in order to learn more about the behavior of the system.

There are a number of other Semtech Receiver EVMs that support different power levels and output voltages, any of which can be used as they are compatible with Qi standard and therefore are compatible with the TSDMTX-19V3-EVM transmitter.

In addition, the evaluator can also use any existing Qi compliant product, though the limited access these devices offer may make the range of experiments that can be performed more limited.

Those who wish to develop their own board, or integrate this functionality into an existing system can use the EVM as a starting point for their design, as it demonstrates a working model from which to proceed. Toward this end, all documentation for the EVM is provided to make the process as efficient as possible.

The key technology in the EVM is the Semtech TS80003 integrated circuit, which controls the system and implements the Qi protocol. Developers can vary the supporting componentry to meet their goals as desired.

In this user guide, an introduction will be provided to the evaluator about how to use the EVM for wireless power transmission as well as how the TSDMRX-19V/20W-EVM can be used in conjunction with it.

Once the system is set up and working, a selection of tests and activities will be described that the evaluator can choose to perform.

LED Behavior

The red and green LEDs on the EVM let the user know what the transmitter is doing as it operates. As seen in the diagram below, when power is applied, the transmitter initializes as indicated by the green LED lighting for about a half second. Next, as the transmitter searches for a nearby receiver, no LED is lit, keeping power to a minimum level in this standby state. When a receiver is located, the transmitter receives instructions on the upcoming transaction to perform. Power is then transmitted and the green LED flashes each second indicating an ongoing charging event. During charging, if a foreign object is detected, charging is aborted and the red LED will flash each second indicating the fault detected, and will continue to do so until the receiver is removed from the target zone. Similarly, any other detected error will also abort the charging process, indicated by a steady red LED that remains lit until the receiver is taken away. Error conditions include communication errors between receiver and transmitter, and detection of excess voltage, current, power, or temperature on the receiver or transmitter. Absent an error, charging continues until the receiver indicates no further power is required, usually when an attached battery is fully recharged. At this point, the transmitter enters the charge complete state, as indicated by the green LED being lit steadily, which it continues to do until the receiver is removed from the transmitter. Whenever the receiver is removed from the target area, the transmitter returns to the standby state, searching for another transaction to begin.

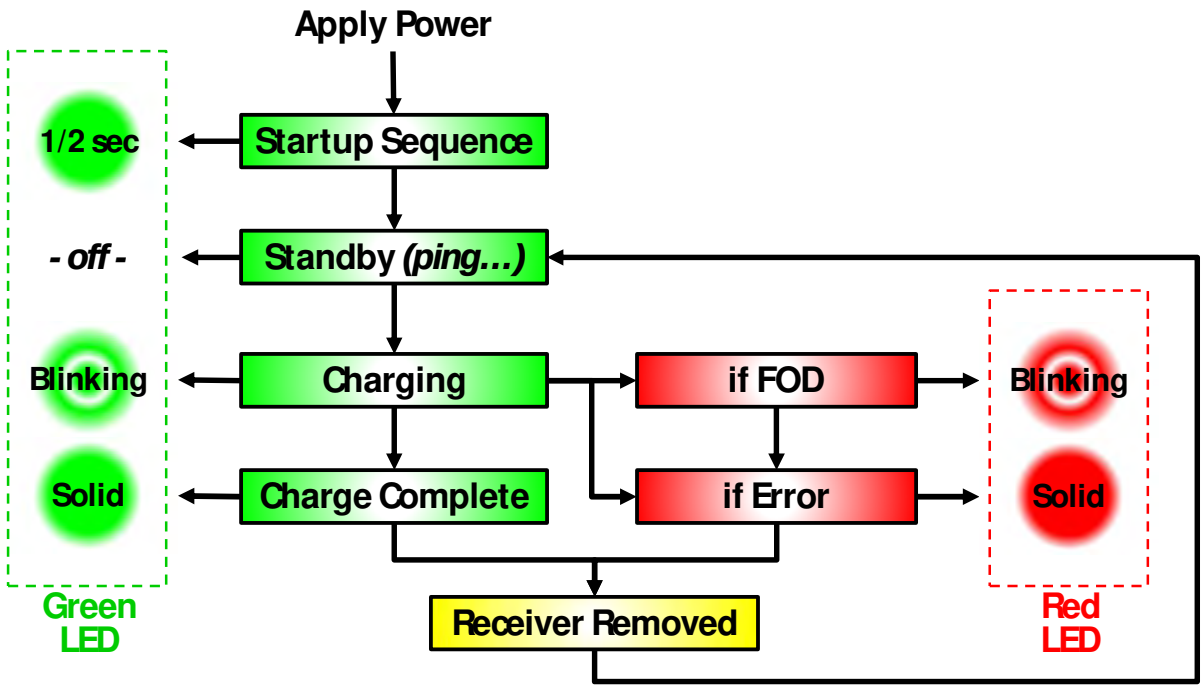

Standard Use

The TSDMTX-19V3-EVM is easy to set up and use. Use the power supply module and line cord that comes with the EVM kit to apply power to the EVM via “J2”, the 19V power input jack. Once input power is provided, the green LED should light for about a half-second and then turn off.

At this point, the EVM is ready to transmit power. A few times each second, the transmitter emits a ‘ping’ of energy in search of a compliant receiver in range.

When receiver is in range (usually 4mm~6mm), the receiver is powered sufficiently during the ping-phase and is able to announce its presence to the transmitter, and a transaction begins. The transmitter provides a small amount of power to the newly discovered receiver, so receiver can tell the transmitter what its power requirements are.

At the completion of the handshake, the transmitter begins providing the requested power, indicated by a blinking green LED. During power transfer, the receiver continuously communicates with the transmitter, actively directing the process. In this way, it is assured that power is only sent by how much it is required by an available and desirous receiver – and in the way that is compatible to the requirements of the receiver. If required, a receiver can actively increase or decrease its power request, and the transmitter will act accordingly. As such, equipment with complex charging requirements can be precisely supported and only the desired amount of power is provided.

Once charging is completed, the LED stops blinking and displays a steady green ‘completed’ state. If at any time an error is detected, the red LED is lit and transmission is halted. To restart, the receiver must be removed from the range of the transmitter and put back to the target zone to start a new transaction.

Productized Receiver Test

If you have a product that is Qi compliant, simply place it on the circular target of the black plastic antenna cover. The transmitter should demonstrate the above actions, and the device receiving power should indicate it is taking a charge in whatever manner its users guide states. You can also perform foreign object detection (FOD) by following the steps in the “FOD Testing” section below.

EVM Receiver Tests

Additional testing can be performed with the use of an EVM receiver module. There are a number of Semtech Receiver EVMs that support different power levels and output voltages, any of which can be used, as all support the Qi standard and therefore are compatible with the TSDMTX-19V3-EVM transmitter. In this User Guide, the TSDMRX-19V/20W-EVM has been selected as the receiver to experiment with. Other Semtech receiver EVMs may be used instead in a similar manner; refer to the user guide for the selected receiver for details specific to the selected device. Also, you can use phones which includes WPC wireless charging functions, like Samung phone S6 or above and Iphone 8 or above, to test TSDMTX-19V3-EVM.

In order to use the TSDMRX-19V/20W-EVM as a target receiver, simply place the receiver over the target circle on the transmitter EVM module. You should see the LEDs on each EVM turn green, indicating a transaction has been established. The EVM's purpose is to receive power; next you can decide what to deliver that power to.

The user has a number of possible options to choose from. The optimal load to select would be a Programmable DC Electronic Load. A 'load box' can easily be set to draw a selected current or power at the turn of a knob, making them very flexible and easy to use in observing power supply operation in general. If a load box is not available, a power resistor decade box is nearly as convenient, as it can easily be set to any desired resistance to simulate a range of load conditions. In either case, please make sure the test load is rated for at least the amount of power being tested. If need be, a selection of power resistors could be used as test loads, though without the ease of modification of the prior options. Finally, any device that uses a 19 volt input up to 15 watts of power can be used as a desired test load.

Whatever load is selected, wires must be run from the VOUT+ and GND pins of the receiver EVM to the selected test load, as per the illustration below. Once the load is added, the receiver EVM can be used to perform a variety of tests. Alternately, power can be drawn from the VBUS and GND lines of the USB port if desired.

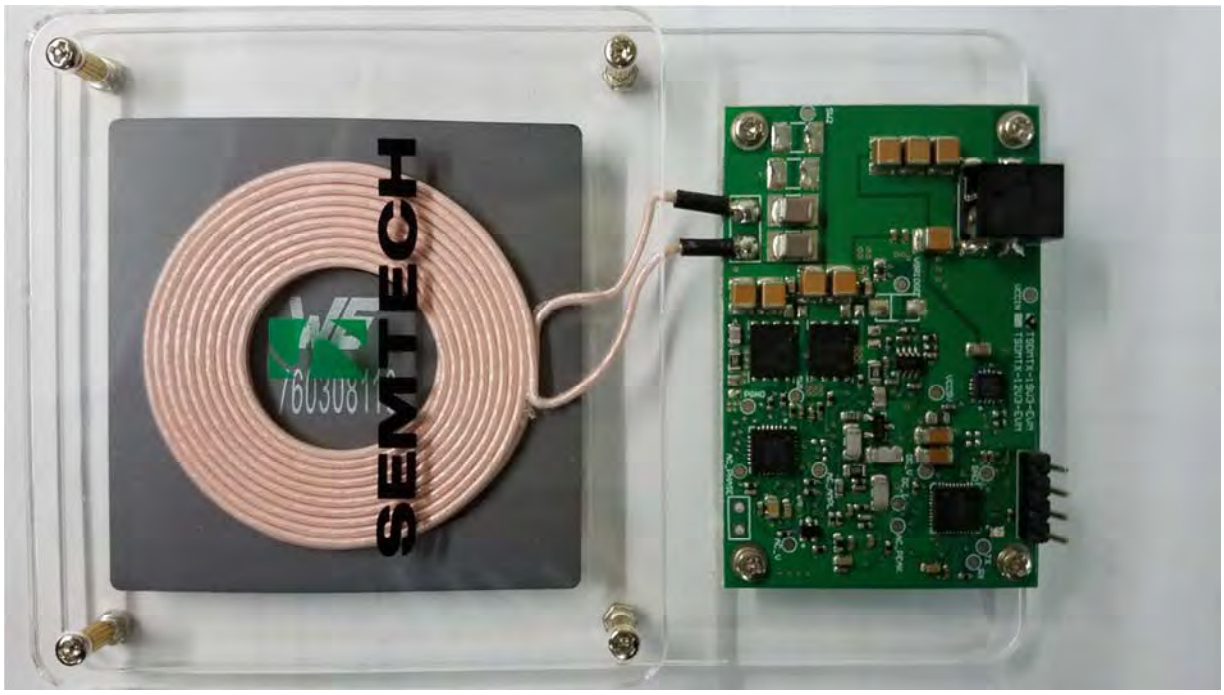

Connect a DC voltmeter across the VOUT+ and GND pins to monitor the voltage being output to the load, and a DC ammeter in series with the VOUT+ line. Set rating of those meters to allow for up to 19 volts and 1.1 amps to be observed.

No load being connected is also fine, place the receiver on the center of the transmitter target circle. Once transmission begins, you should observe approximately 19 volts and 0 amperes on the meters.

Apply a variety of loads to observe performance at 5, 10, and 15 watt levels. Voltage should remain nearly constant, and current should follow the P=V*I relationship. Experiment with the maximum power that can be drawn before the receiver detects an overload and cuts off power. You should be able to observe on a minor overload, the receiver will attempt to restore power by retesting the load intermittently. In the case of a major overload, the transmitter may register an error, as indicated by a red LED on the transmitter, which will halt further activity until the receiver is removed from the target area for several seconds before being placed back to start a new transaction.

Observe Coil Signals

The following information is provided for reviewing how the EVM works in detail, as what can be observed below is entirely managed by the Semtech TS80003 Wireless Controller. It allows the observer an opportunity to see how the receiver and transmitter actively manage the wireless power process.

If you wish to observe the intrinsic wireless process, place an oscilloscope probe on one end of the antenna/coil, with the probe ground connected to the board ground (one of the fastener screws will suffice). Be sure the scope can handle signals up to 250 volts. While the EVM power supply is only 19 volts, the antenna is part of a resonant circuit where considerably higher voltages is developed.

To observe the search ping, apply power to the transmitter and remove the receiver from the target zone. The scope should display a ‘chirp’ of 0.5 to 1mSec in duration with an initial peak of 15 to 20 volts. The frequency within the envelope of the chirp is in the 100-205 kHz range, which is the normal range of Qi systems.

Next, place the receiver on the transmitter target. With the scope set to 0.5 to 1 uSec and 10 to 20 volts per division, you should observe a signal that is a composite of the sinusoidal power signal with a digital ‘notch’ in the sinewave which is produced by the communication between the receiver and transmitter. Note as you vary the load and the location of the receiver on the target that the amplitude and frequency of the coil signal changes. The greater the load, the more signal is sent to transfer the power required by the load. Similarly, the less well coupled the receiver antenna is to the transmitter coil, the more power must be sent to compensate for the inefficient misalignment. You may note voltages near 140 volts peak-to-peak in the most demanding conditions.

Measure Efficiency

By measuring the power from the receiver's VOUT+ and GND pins in comparison to the power entering the transmitter EVM, you can calculate the efficiency of the power transfer through the system. For the EVMs used here, the diagram below demonstrates that efficiency is a function of output current, and runs about 83% at nominal power level (19V/1.0A), assuring good efficiency and minimal heat dissipation concerns.

Rx is Semtech TSDMRX-19V/20W-EVM which can support up to 20W load under normal condition.

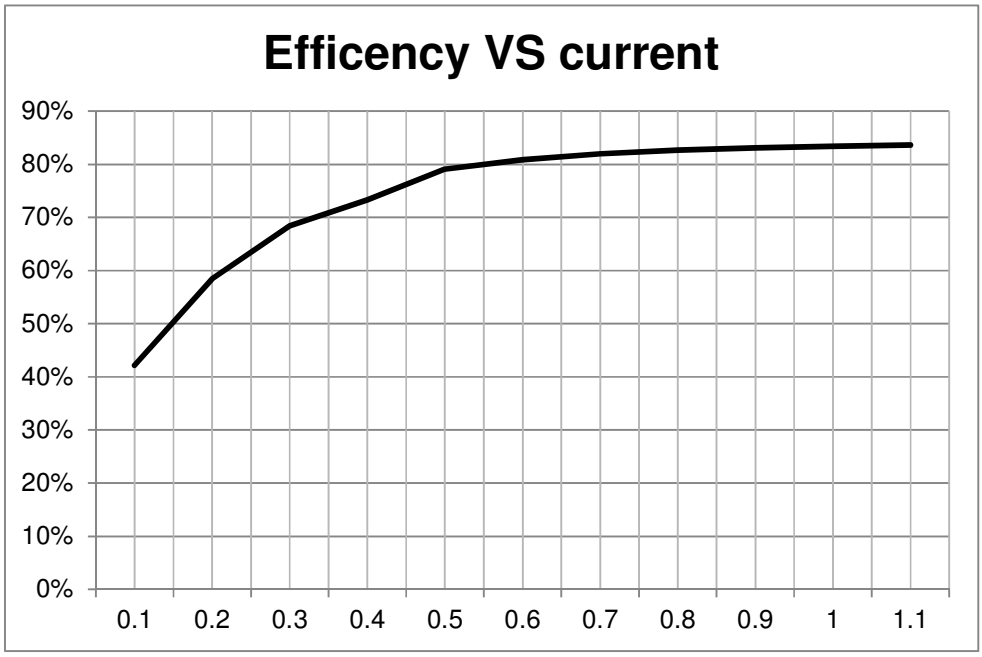

Thermal Images Using TSDMRX-19V20W-EVM under 19V 20W condition

Operation ambient temperature: 26.5°C

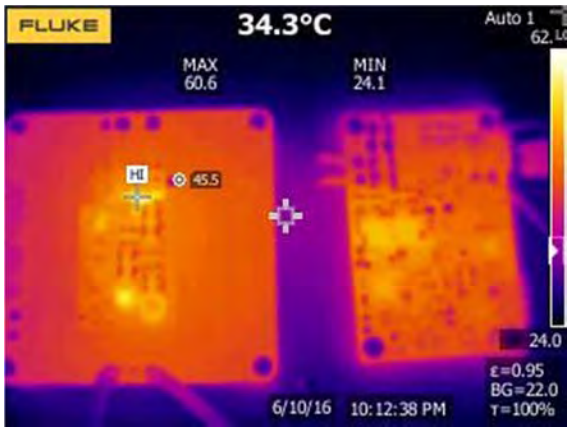

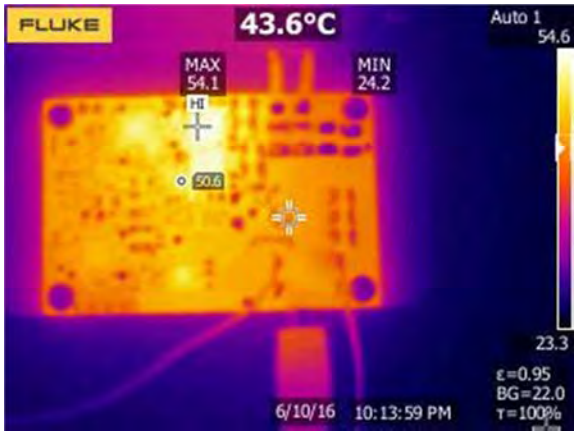

Rx: 60.6°C

Tx board: 54.1°C

Thermal Images Using TSDMRX-5V10W-EVM under 5V 10W condition

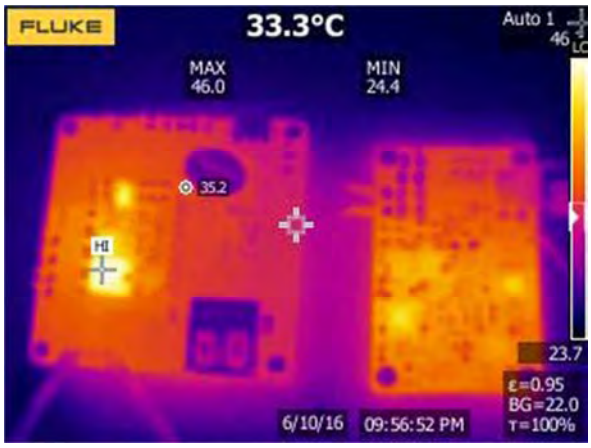

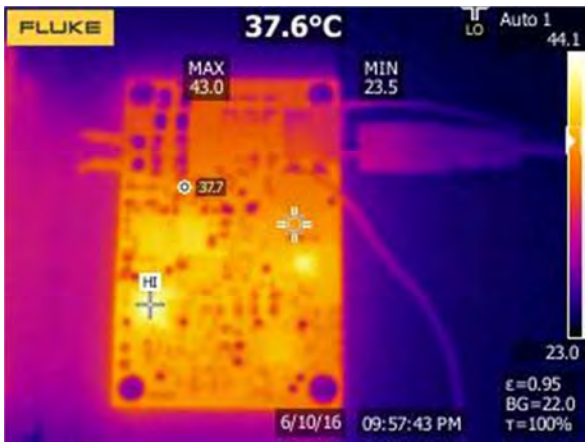

Rx board: 46°C

Tx board:43°C

Firmware Management

The EVM is shipped with the latest released version of the firmware at the time it was manufactured. However, as the standard evolves, or enhancements are made to the board performance, the firmware updates will be available at https://www.semtech.com/power-management/wireless-charging-ics/wiireless-charging-evm-firmware/index.html.

Equipments for FW update:

Device	Qty.
TSDMTX-19V3-EVM	1
Semtech USB TO UART adapter	1
Semtech Wireless Power GUI software	1

GUI for TS80003 allows you install the latest firmware to your board, and also to interrogate the board as to which version of the firmware is currently installed. Here is the link in the Semtech website to download TS8000X GUI file, Docs& Resources item:

http://www.semtech.com/apps/product.php?pn=TS80000

The following sequence is for FW program:

1. Run WirelessPowerGUI_setup.exe file to any desired location on your computer, then you can find the Semtech Wilreless Power GUI.

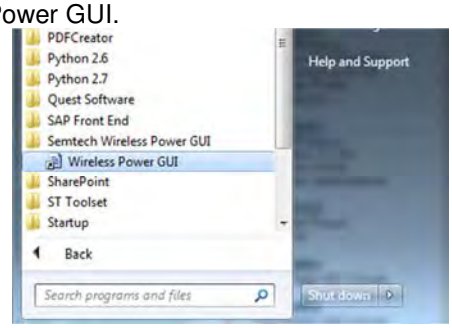

2. Make sure the 19V input is not connected.

3. Connect the USB-to-UART adapter board to EVM board, and connect the adapter board to PC.

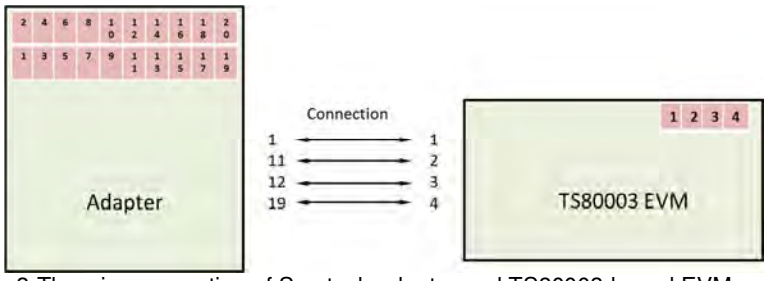

Figure 3 The wire connection of Semtech adapter and TS80003-based EVM

4. Run Wilreless Power GUI to start the user interface, click “Device”, choose “TS80003”.

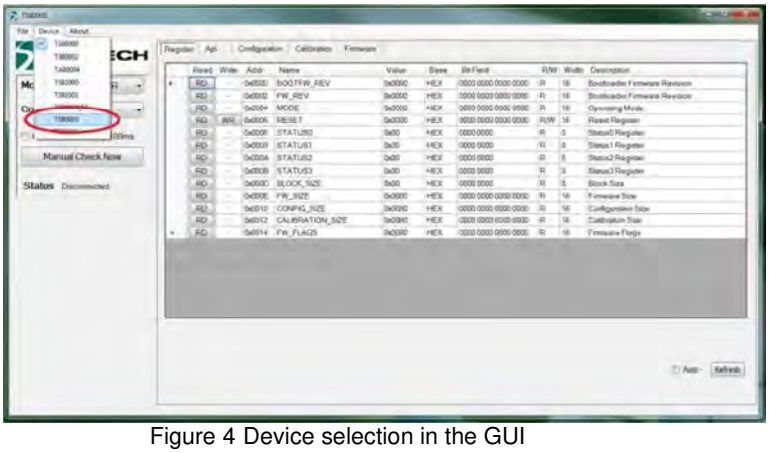

Figure 4 Device selection in the GUI

5. Check if the status changes to “Connected”.

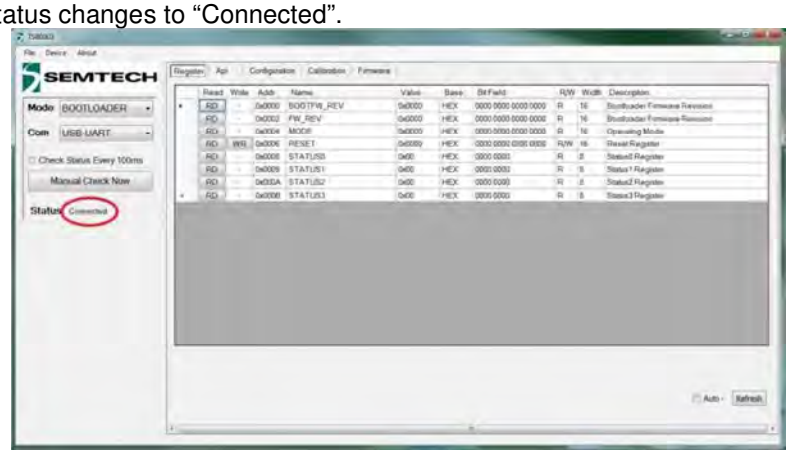

Figure 5 Status check in the GUI

6. If the status is connected, click “Firmware”, and then click the browse button.

Figure 6 Firmware upload window in the GUI

7. Choose the binary file, and click “Open”.

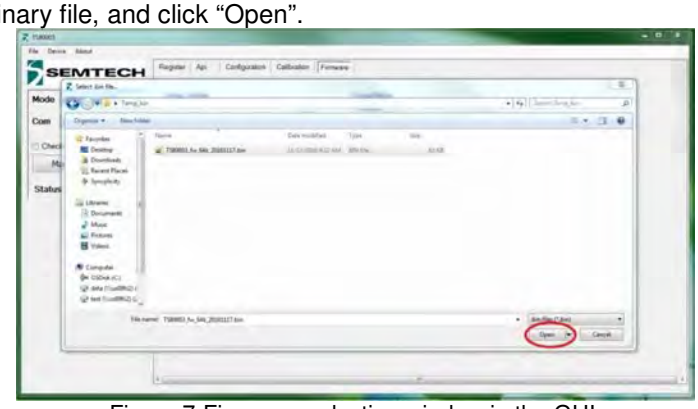

Figure 7 Firmware selection window in the GUI.

8. Click “Program”, wait until the new window shows “Firmware is programmed successfully”. (The programming process takes almost 20s.)

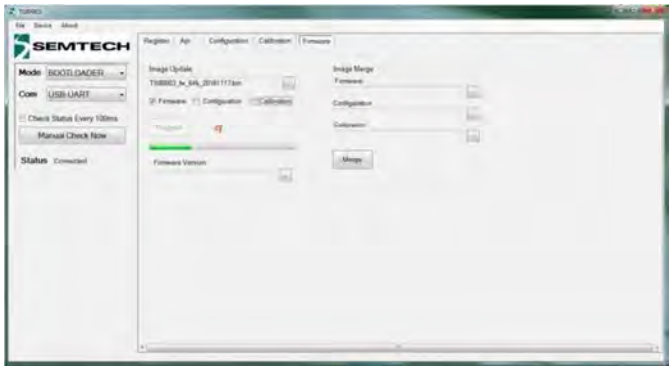

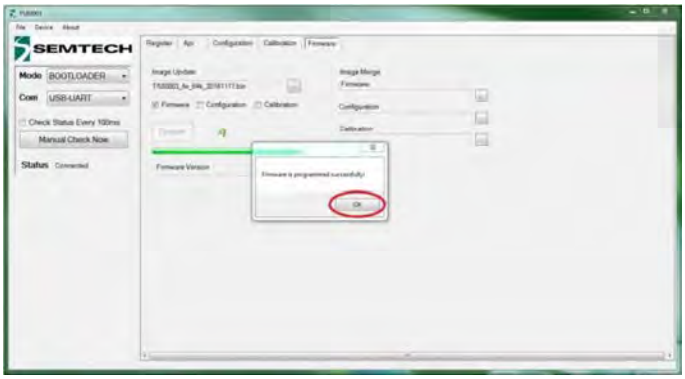

9. Close the GUI software, and then disconnect the USB-to-UART adapter board with EVM board.

FOD Test

In a production device, FOD testing is an important feature, in that the transmission process is constantly inspected for the introduction of extraneous materials in the target area that could absorb the transmitted energy and become hot. When Foreign Objects are Detected ("FOD"), the TS80003 shuts down power transmission as a safety precaution, and indicates the detected problem by blinking the red status LED.

This process is bypassed in the receiver EVM, however, in order to allow engineers to test different antennas and make other hardware modifications without triggering the FOD protocols and complicating the testing process. When such hardware changes are made, the parameters of the feedback measurements change, which the FOD protocol would perceive as a foreign object in the field, and cause the system to shut down.

In order to test the FOD protocol, the experimenter can use any Qi products certified to WPC 1.2.2 or higher as a receiver. A list of such products can be found at:

http://www.wirelesspowerconsortium.com/products/?brand_name=&product_name=&type_number=&product_type=2&compliant_automotive=&sort=&direction=asc

Experiments can be run on foreign objects on receivers with and without FOD management enabled to observe the differences. With FOD disabled, the metal object in the field will absorb some of the transmitted energy and become warm. Using a FOD-enabled production device, power transmission will be aborted when any significant interference in power transfer has been detected.

Once a FOD abort takes place, the transaction is terminated, as indicated by a blinking red LED. To restart power transmission, the receiver must be removed from the target area and a new transaction must be initiated. If the FOD is still present, the transaction will fail again, and continue to do so until the FOD is removed from the target area.

Documentation

The following sections document the hardware design of the TSDMTX-19V3-EVM. This information can be used to better understand the functionality of the design, as well as assist in creating your own hardware solution based on this design.

A. Block Diagram

The TSDMTX-19V3-EVM may be divided into a number of sub-blocks as shown in the diagram below:

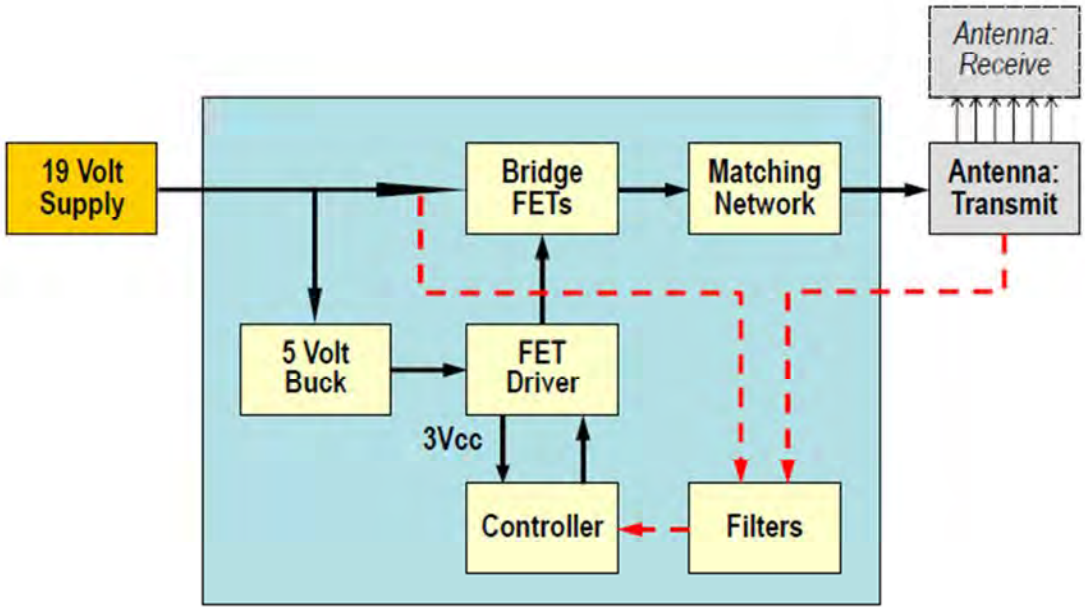

19 Volt Supply - the external 'brick' that converts AC power to 19 volts

5 Volt Buck – based on the TS30011, converts 19 vdc to 5 vdc

Controller – based on the TS80003 Wireless Power Controller. Includes I/O: USB, I2C, Temp Sensor, LED display

FET Driver – based on the TS61002 Full-bridge FET Driver, powers the FETs based on inputs from controller, supply 3Vcc for Controller

Bridge FETs – gates drive power from the 19v supply to drive the resonant tank circuit (antenna)

Matching Network – array of capacitors to create the resonant tank along with the antenna

Antenna: Transmit – acts as the primary of an air-core transformer in conjunction with the receiver antenna.

Filters – adapt the antenna and drive values for use as feedback input to the controller, TS94033 as the current amplifier.

B. Schematic

Below are the schematics for the TSDMTX-19V3-EVM. Annotation has been added to indicate which part of the block diagram each component is a member of.

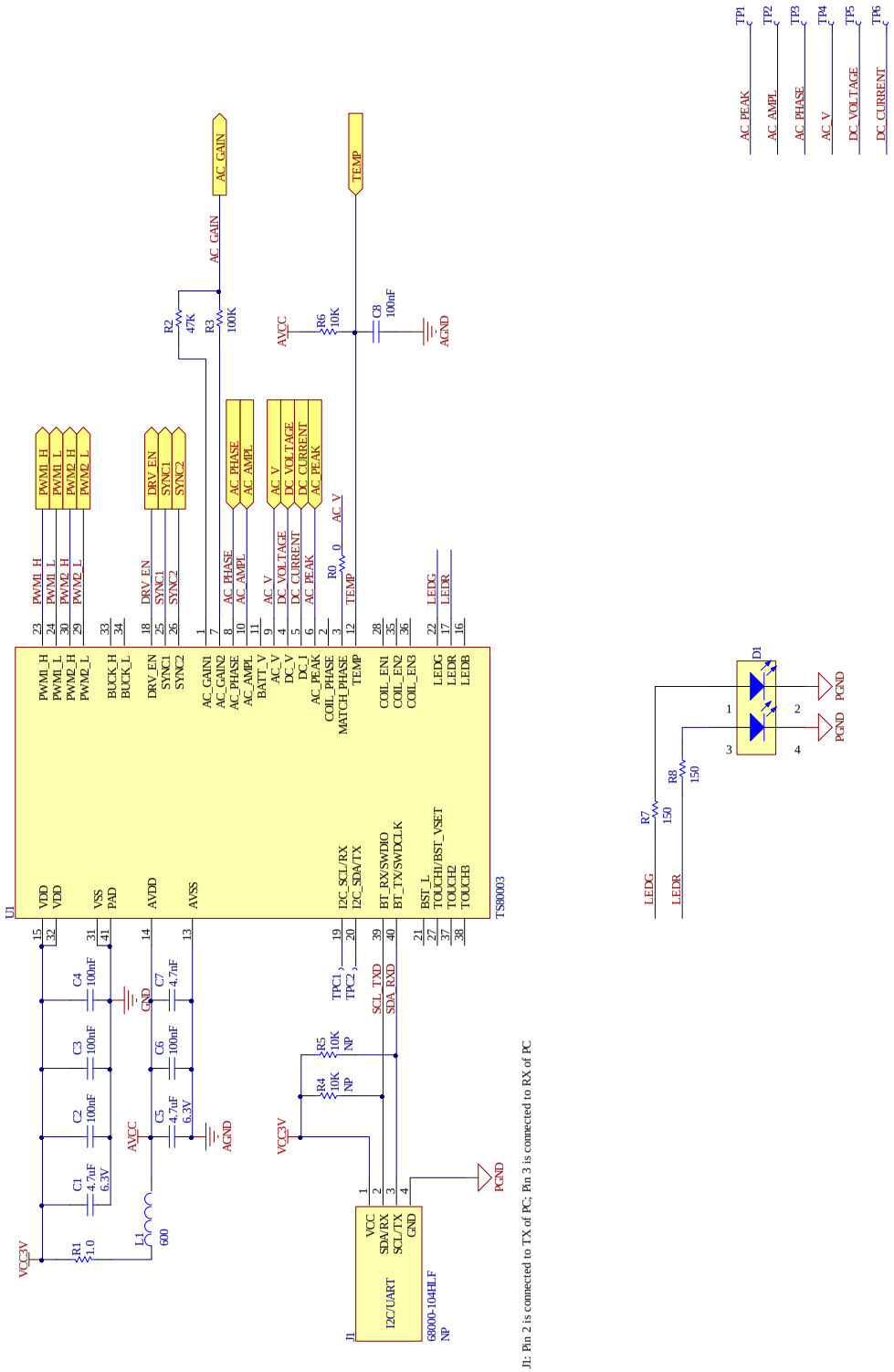

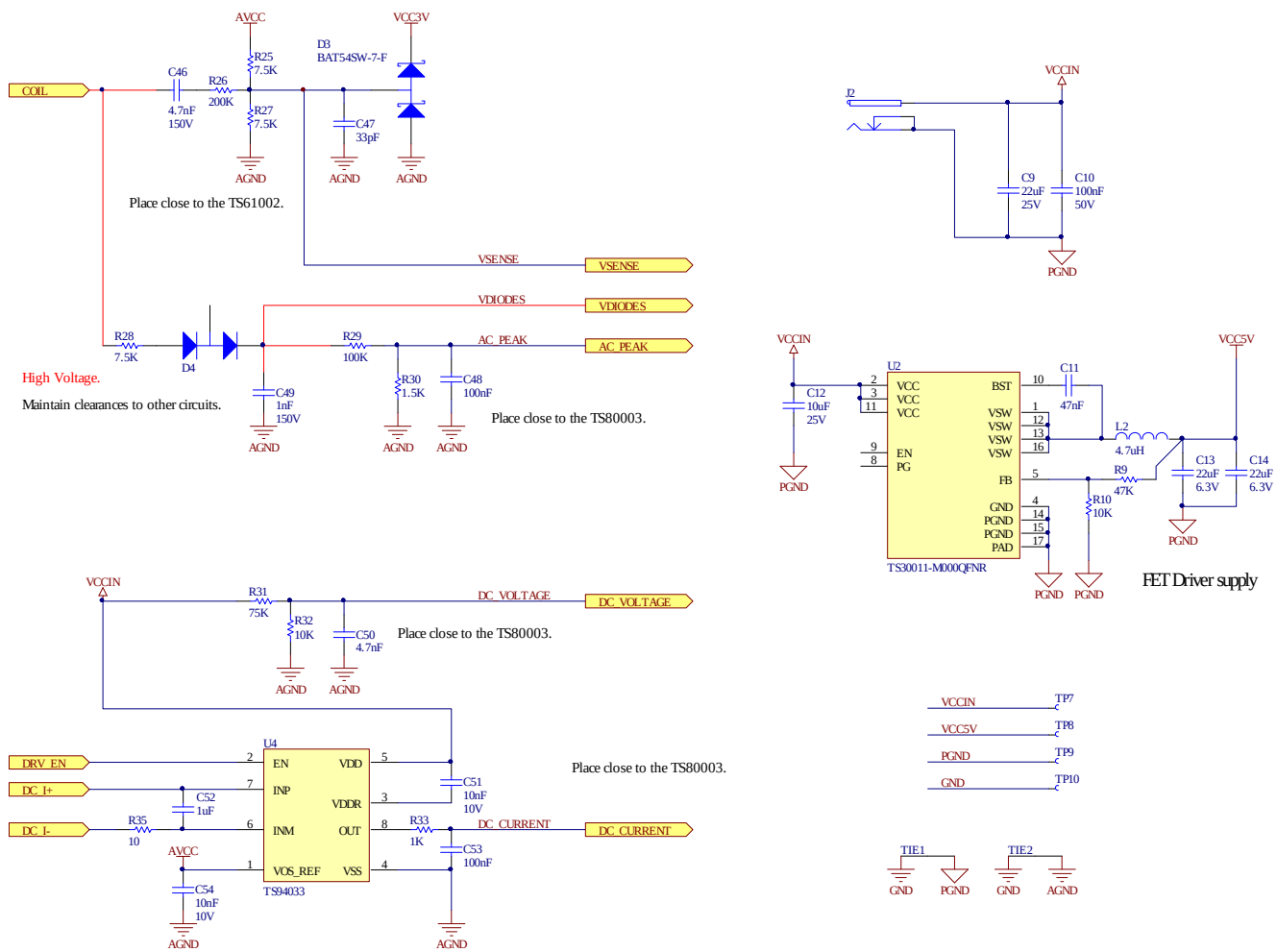

AVCC
VCC3V
D3
BAT54SW-7-F
COIL
C46
4.7nF
150V
R26
200K
R25
7.5K
R27
7.5K
C47
33pF
AGND
Place close to the TS61002.
VSENSE
VDIODES
AC_PEAK
R28
7.5K
D4
R29
100K
High Voltage.
Maintain clearances to other circuits.
C49
1nF
150V
R30
1.5K
C48
100nF
Place close to the TS80003.
VCCIN
R31
75K
R32
10K
C50
4.7nF
DC_VOLTAGE
Place close to the TS80003.
U4
DRV_EN
DC_I+
DC_I-
EN
INP
INM
VOS_REF
VDD
VDDR
OUT
VSS
TS94033
C52
1uF
R35
10
C54
10nF
10V
C51
10nF
10V
R33
1K
C53
100nF
DC_CURRENT
Place close to the TS80003.
J2
C9
22uF
25V
C10
100nF
50V
PGND
VCCIN
C12
10uF
25V
U2
VCC
EN
PG
BST
VSW
FB
GND
PGND
PAD
TS30011-M000QFNR
C11
47nF
L2
4.7uH
R9
47K
R10
10K
VCC5V
C13
22uF
6.3V
C14
22uF
6.3V
FET Driver supply
VCCIN
VCC5V
PGND
GND
TP7
TP8
TP9
TP10
TIE1
TIE2

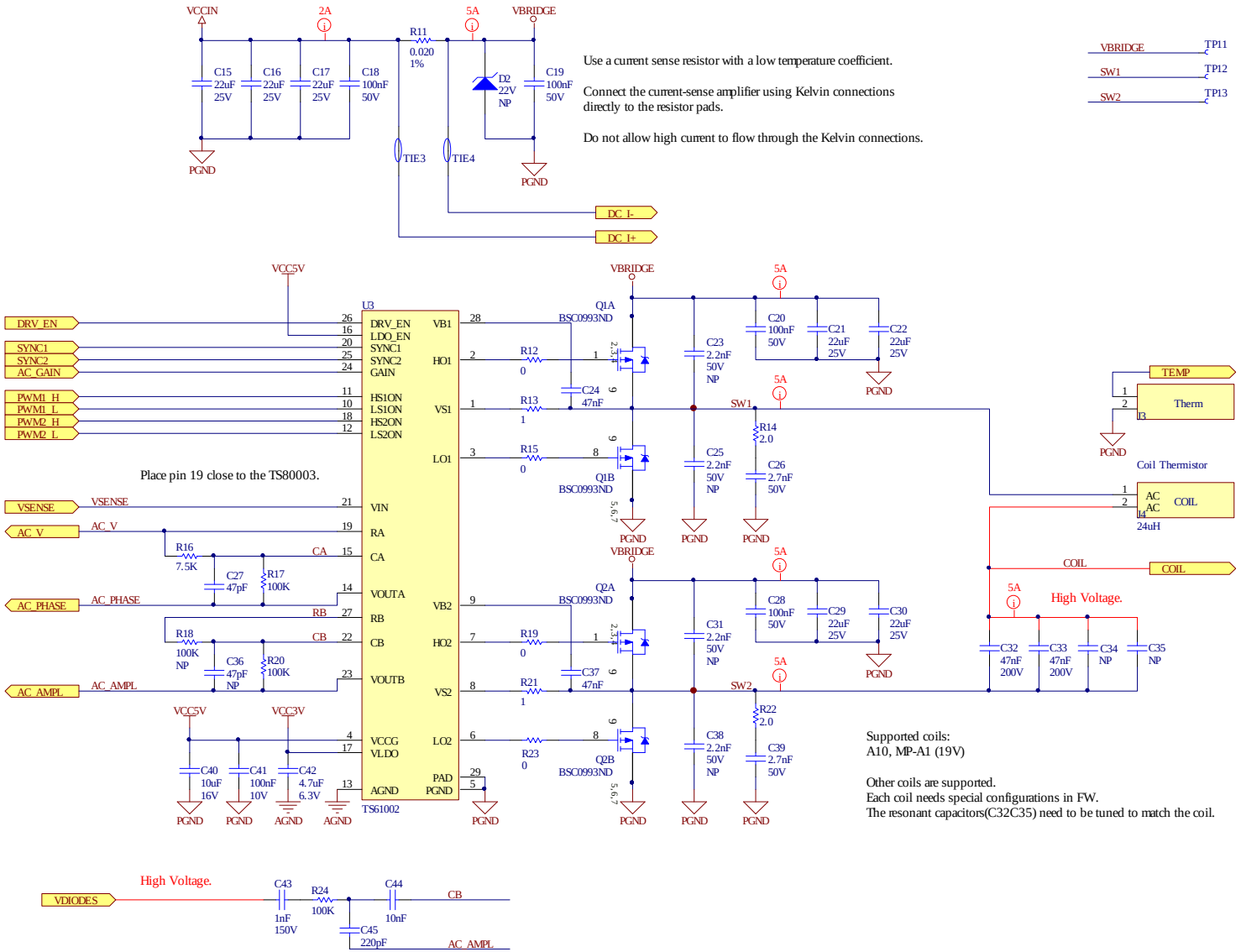
VCCIN
2A
5A
VBRIDGE
R11
0.020
1%
C15
22uF
25V
C16
22uF
25V
C17
22uF
25V
C18
100nF
50V
D2
22V
NP
C19
100nF
50V
TIE3
TIE4
PGND
DC_I-
DC_I+
Use a current sense resistor with a low temperature coefficient.
Connect the current-sense amplifier using Kelvin connections directly to the resistor pads.
Do not allow high current to flow through the Kelvin connections.
VBRIDGE TP11
SW1 TP12
SW2 TP13
VCC5V
U3
DRV_EN
SYNC1
SYNC2
AC_GAIN
PWM1_H
PWM1_L
PWM2_H
PWM2_L
VSENSE
AC_V
AC_PHASE
AC_AMPL
VCC3V
VB1
HO1
VS1
LO1
VB2
HO2
VS2
LO2
PAD
AGND
TS61002
Q1A
Q1B
Q2A
Q2B
BSC0993ND
R12
R13
R14
R15
R16
R17
R18
R19
R20
R21
R22
R23
C20
C21
C22
C23
C24
C25
C26
C27
C28
C29
C30
C31
C32
C33
C34
C35
C36
C37
C38
C39
C40
C41
C42
SW1
SW2
TEMP
Therm
Coil Thermistor
COIL
24uH
High Voltage.
Place pin 19 close to the TS80003.
VDIODES
C43
R24
C44
C45
Supported coils:
A10, MP-A1 (19V)
Other coils are supported.
Each coil needs special configurations in FW.
The resonant capacitors(C32C35) need to be tuned to match the coil.

C. Bill Of Materials "BOM"

Below is a list of the parts used in the TSDMTX-19V3-EVM. An excel spreadsheet file with this information is available on the Semtech website as an additional convenience.

Item	Designator	Qt.	ManufacturerCode	Footprint	Description	Manufacturer
1	C1, C5, C42	3		0603	0603 4.7uF 6.3V	
2	C10, C18, C19	3		0402	0402 100nF 50V	
3	C11, C24, C37	3		0402	0402 47nF 25V	
4	C12	1		0805	0805 10uF 25V	
5	C13, C14	2	JMK316B7226ML-T	1206	1206 22uF 6.3V X7R	Tayio Yuden
6	C2, C3, C4, C6, C8, C41, C48, C53	8		0402	0402 100nF 10V	
7	C20, C28	2		0603	0603 100nF 50V	
8	C26, C39	2		0805	0805 2.7nF 50V	Yageo
9	C27	1		0402	0402 47pF 10V	
10	C32, C33	2	C1210C473J2GACAUTO	1210	1210 47nF 200V C0G	Kemet
11	C40	1		0805	0805 10uF 16V	
12	C43, C49	2		1206	1206 1nF 150V	
13	C44, C51, C54	3		0402	0402 10nF 10V	
14	C45	1		0402	0402 220pF 10V	
15	C46	1		1206	1206 4.7nF 150V	
16	C47	1		0402	0402 33pF 10V	
17	C52	1		0402	0402 1uF 10V	
18	C7, C50	2		0402	0402 4.7nF 10V	
19	C9, C15, C16, C17, C21, C22, C29, C30	8	CL32B226KAJNFNE	1210	1210 22uF 25V X7R	Samsung
20	D1	1	APHB1608ZGSURKC	APHB1608	LED Dual Color	Kingbright
21	D3	1	BAT54SW-7-F	SOT323-3N	Schottky Diode	Zetex
22	D4	1	BAS101S,215	SOT23-3N	Diode	NXP
23	J2	1	PJ-014DH-SMT	CON_PWR	Low Voltage Power Supply Connector	CUI
24	**J4**	**1**	**760308110**	**Coil**	**24uH±10% 6A, Q=180, Typ. RDC=0.07ohm**	**Wurth Electronics**
25	L1	1	BLM18AG601SN1D	0603	0603 600R Beads	Murata
26	L2	1	MLP2012S4R7M	0805	0805 4.7uH QFN8-INF	TDK
27	Q1, Q2	2	BSC0993ND	QFN8-INF	DUAL MOSFET	
28	R0, R12, R15, R19, R23	5		0402	0402 0R	
29	R1, R13, R21	3		0402	0402 1R	
30	R11	1	WSL0603R0200FEA	0805	0805 0R02 1% 75PPM/C	Vishay
31	R14, R22	2		0805	0805 2R	
32	R16, R25, R27	3		0402	0402 7K5	
33	R2, R9	2		0402	0402 47K	
34	R26	1		0603	0603 200K	
35	R28	1		0603	0603 7K5	
36	R29	1		0805	0805 100K	
37	R3, R17, R20, R24	4		0402	0402 100K	
38	R30	1		0402	0402 1K5	
39	R31	1		0402	0402 75K	
40	R33	1		0402	0402 1K	
41	R35	1		0402	0402 10R	
42	R6, R10, R32	3		0402	0402 10K	
43	R7, R8	2		0402	0402 150R	
44	U1	1	TS80003	VQFN	TS80003 PG-VQFN-40-17	Semtech
45	U2	1	TS30011-M000QFNR	QFN	Current-Mode Synchronous Buck DC/DC Con	Semtech
46	U3	1	TS61002	QFN	Full-Bridge FET driver	Semtech
47	U4	1	TS94033SKTRC	SC70-8N	Current Sense Amplifier	Semtech

Tx coil Specifications:

Vendor	Part Number	Inductance	DCR(typ.)	Dimension
Wurth Electronics	760308110	24uH	0.07Ω	53.3mmX53.3mm

Attention:

1. Resonance capacitors (C32,C33) should be COG capacitor, it should any Qi products certified to WPC 1.2.2 or higher as a receiver;
2. Current sense resistor (R11) should be 1% 75PPM/C or better.

Coil size 53mmX53mm

TSDMRX-19V20W-EVM coil specification:

Vendor	Part Number	Inductance	DCR(typ.)	Dimension
ABRACON	AWCCA-RX350300-101	25uH±10%	0.15Ω	Ø35.00x3.15mm

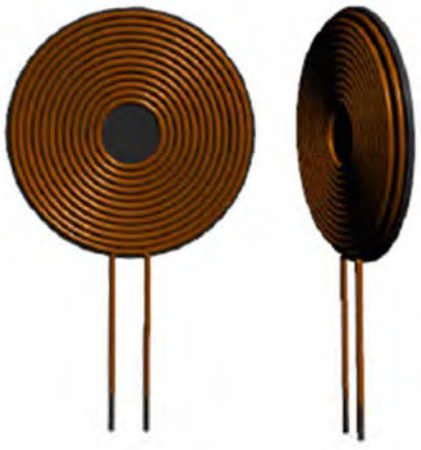

D. Board Layout

The diagram below shows the locations of the components used in the TSDMTX-19V3-EVM PCB.

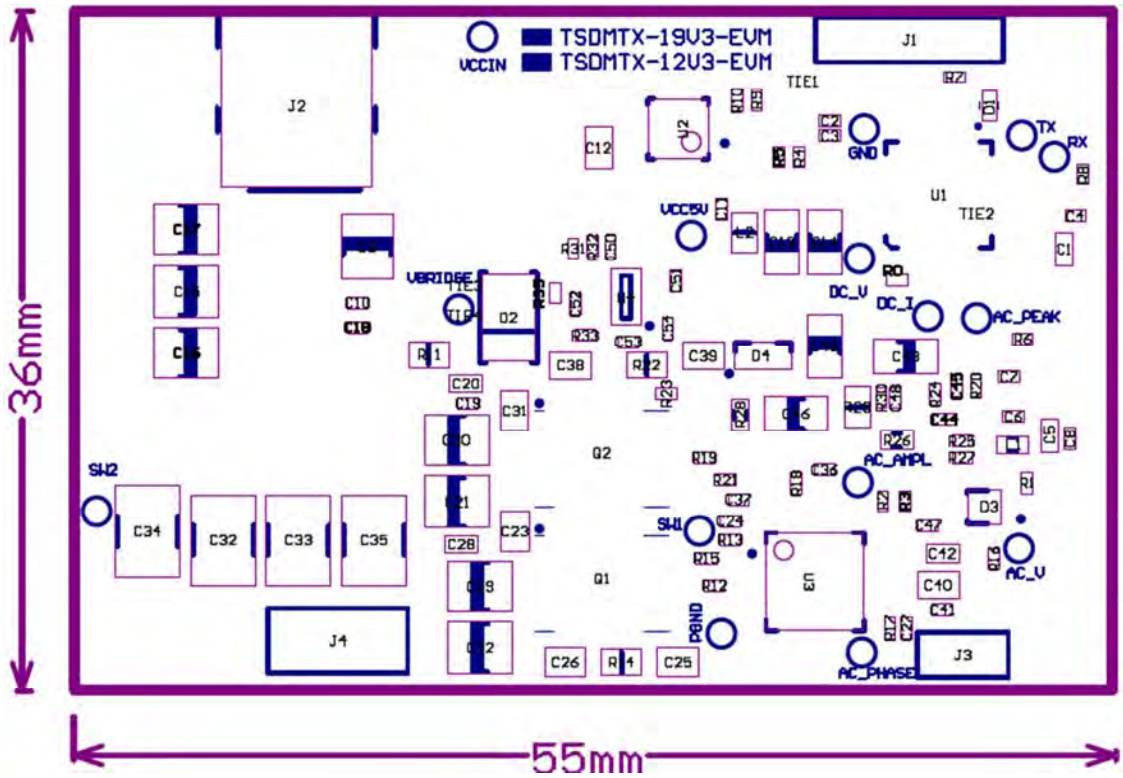

E. Board Layers

The TSDMTX-19V3-EVM PCB is based on a four layer design as shown below. The ground plane in layer two is recommended to reduce noise and signal crosstalk. All components are placed on the top of the board for easier evaluation of the system. End product versions of this design can be made significantly smaller by distributing components on both sides of the board. The Gerber files for this artwork can be downloaded from the Semtech web page.

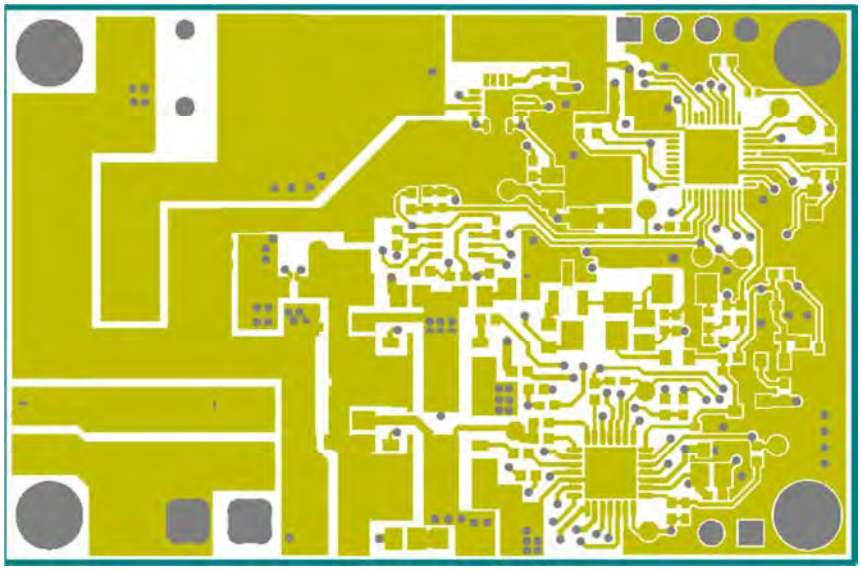

Top Layer

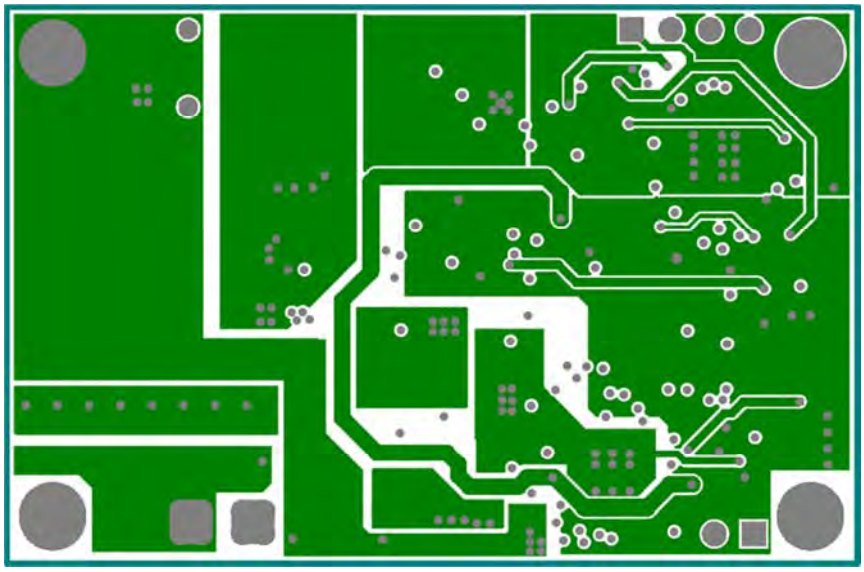

Ground Plane

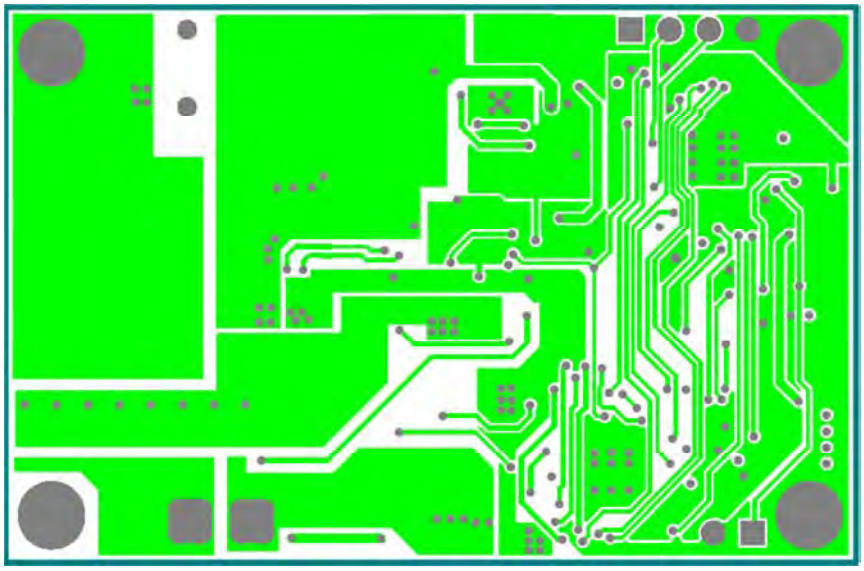

Signal Layer

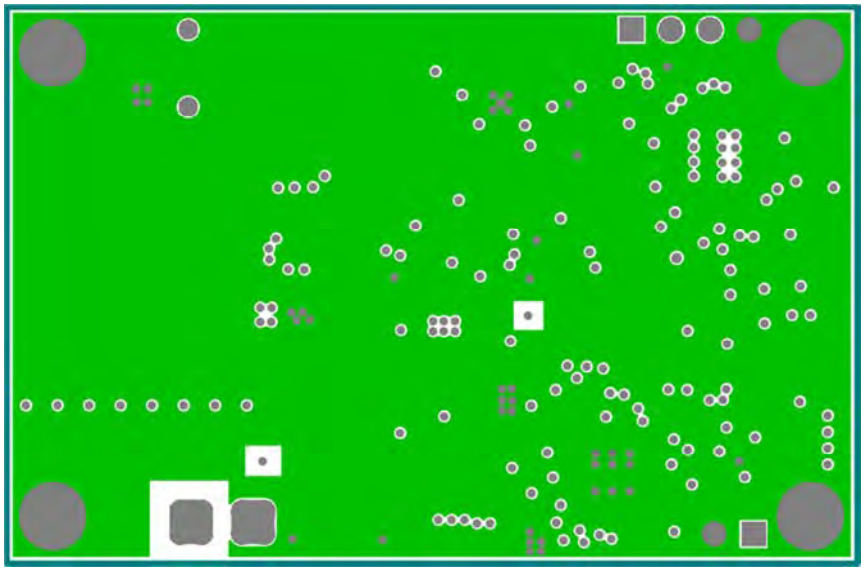

Bottom Layer

Attention:

Connect the current-sense amplifer using Kelvin connections directly to the Current sense resistor pads, and DO NOT allow high current to flow through the Kelvin connections. It is an example for the layout.

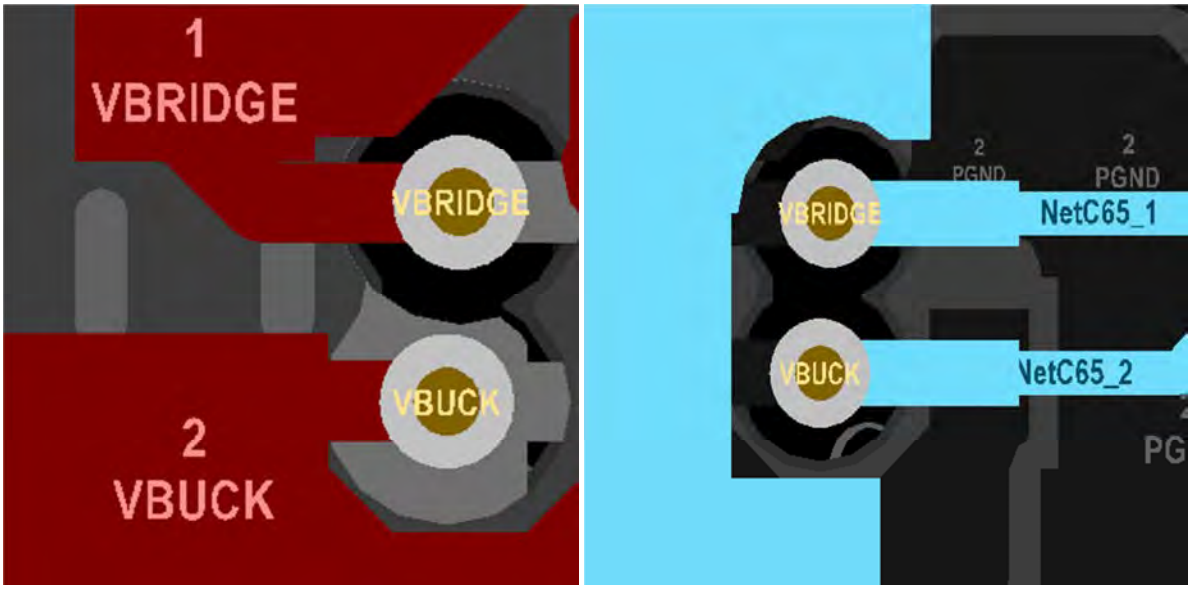
1
VBRIDGE
VBRIDGE
VBUCK
2
VBUCK
2
PGND
2
PGND
VBRIDGE
NetC65_1
VBUCK
NetC65_2
PG

FAQs

Q: What output voltage is provided by the TSDMTX-19V3-EVM system?

A: It depends on which receiver is being used. For the TSDMRX-19V/20W-EVM, the output would be 19 volts, at up to 20 watts total power. If the TSDMRX-5W-EVM was used, the output would be 5 volts, at up to 5 watts.

Q: Where can I find more information on the Qi and PMA standards?

A: There are a number of websites that address this subject. A good starting point for Qi would be: http://www.wirelesspowerconsortium.com/technology/how-it-works.html.
PMA, which is now joined with A4WP, is now called AirFuel. Information on them can be found at: http://www.airfuel.org/technologies/inductive.

Q: Does the EVM part number represent something in particular?

A: Yes. The part number is broken into a prefix, main body, and suffix, separated by dashes. The prefix is comprised of three two letter groupings that each help define the product represented. As such, the part number can be read as follows:

Prefix characters:

1+2 = Company :	TS = Triune/Semtech	
3+4 = Environment :	DM = Dual Mode	WI = Wearable Infrastructure
5+6 = Type :	TX = Transmit	RX = Receive

Mid-section = Device Voltage and/or Wattage

Suffix = Equipment type:

EVM = Evaluation Module

MOD = Production Module

Therefore, the TSDMTX-19V3-EVM is a Dual Mode, 19 volt Transmitter Evaluation Module provided by Semtech.

Q: What if my questions weren't answered here?

A: Please visit the Semtech website as described on the next page. An updated FAQ for the TSDMTX-19V3-EVM is maintained there and may contain the answers you're looking for. Your local Semtech FAE can also assist in answering your questions.

Next Steps

For more information on Wireless Power, go to the Semtech webpage at:

https://www.semtech.com/power-management/wireless-charging-ics/

You may also scan the bar code to the right to go to the above web page:

There you can find the downloadable copies of the schematic, BOM, and board artwork, as well as additional information on how to obtain Semtech wireless power products, from the chip level all the way to complete board modules, as your needs require.

IMPORTANT NOTICE

Information relating to this product and the application or design described herein is believed to be reliable, however such information is provided as a guide only and Semtech assumes no liability for any errors in this document, or for the application or design described herein. Semtech the latest relevant information before placing orders and should verify that such information is current and complete. Semtech reserves the right to make changes to the product or this document at any time without notice. Buyers should obtain warrants performance of its products to the specifications applicable at the time of sale, and all sales are made in accordance with Semtech's standard terms and conditions of sale.

SEMTECH PRODUCTS ARE NOT DESIGNED, INTENDED, AUTHORIZED OR WARRANTED TO BE SUITABLE FOR USE IN LIFE-SUPPORT APPLICATIONS, DEVICES OR SYSTEMS, OR IN NUCLEAR APPLICATIONS IN WHICH THE FAILURE COULD BE REASONABLY EXPECTED TO RESULT IN PERSONAL INJURY, LOSS OF LIFE OR SEVERE PROPERTY OR ENVIRONMENTAL DAMAGE. INCLUSION OF SEMTECH PRODUCTS IN SUCH APPLICATIONS IS UNDERSTOOD TO BE UNDERTAKEN SOLELY AT THE CUSTOMER'S OWN RISK. Should a customer purchase or use Semtech products for any such unauthorized application, the customer shall indemnify and hold Semtech and its officers, employees, subsidiaries, affiliates, and distributors harmless against all claims, costs damages and attorney fees which could arise.

The Semtech name and logo are registered trademarks of the Semtech Corporation. All other trademarks and trade names mentioned may be marks and names of Semtech or their respective companies. Semtech reserves the right to make changes to, or discontinue any products described in this document without further notice. Semtech makes no warranty, representation or guarantee, express or implied, regarding the suitability of its products for any particular purpose. All rights reserved.

© Semtech 2015

Contact Information

Semtech Corporation
200 Flynn Road, Camarillo, CA 93012
Phone: (805) 498-2111, Fax: (805) 498-3804
www.semtech.com

Общество с ограниченной ответственностью «МосЧип» ИНН 7719860671 / КПП 771901001
Адрес: 105318, г.Москва, ул.Щербаковская д.3, офис 1107

Данный компонент на территории Российской Федерации

Вы можете приобрести в компании MosChip.

Для оперативного оформления запроса Вам необходимо перейти по данной ссылке:

http://moschip.ru/get-element

Вы можете разместить у нас заказ для любого Вашего проекта, будь то серийное производство или разработка единичного прибора.

В нашем ассортименте представлены ведущие мировые производители активных и пассивных электронных компонентов.

Нашей специализацией является поставка электронной компонентной базы двойного назначения, продукции таких производителей как XILINX, Intel (ex.ALTERA), Vicor, Microchip, Texas Instruments, Analog Devices, Mini-Circuits, Amphenol, Glenair.

Сотрудничество с глобальными дистрибьюторами электронных компонентов, предоставляет возможность заказывать и получать с международных складов практически любой перечень компонентов в оптимальные для Вас сроки.

На всех этапах разработки и производства наши партнеры могут получить квалифицированную поддержку опытных инженеров.

Система менеджмента качества компании отвечает требованиям в соответствии с ГОСТ Р ИСО 9001, ГОСТ РВ 0015-002 и ЭС РД 009

Офис по работе с юридическими лицами:

105318, г.Москва, ул.Щербаковская д.3, офис 1107, 1118, ДЦ «Щербаковский»

Телефон: +7 495 668-12-70 (многоканальный)

Факс: +7 495 668-12-70 (доб.304)

E-mail: info@moschip.ru

Skype отдела продаж:
moschip.ru
moschip.ru_4
moschip.ru_6
moschip.ru_9