muRata

Reference Specification

200°C Operation Leaded MLCC for Automotive with AEC-Q200
RHS Series

Product specifications in this catalog are as of Dec. 2019, and are subject to change or obsolescence without notice.
Please consult the approval sheet before ordering.Please read rating and Cautions first.

⚠ CAUTION

1. OPERATING VOLTAGE

When DC-rated capacitors are to be used in AC or ripple current circuits, be sure to maintain the Vp-p value of the applied voltage or the Vo-p which contains DC bias within the rated voltage range. When the voltage is started to apply to the circuit or it is stopped applying, the irregular voltage may be generated for a transit period because of resonance or switching. Be sure to use a capacitor within rated voltage containing these irregular voltage.

When DC-rated capacitors are to be used in input circuits from commercial power source (AC filter), be sure to use Safety Recognized Capacitors because various regulations on withstand voltage or impulse withstand established for each equipment should be taken into considerations.

Voltage	DC Voltage	DC+AC Voltage	AC Voltage	Pulse Voltage(1)	Pulse Voltage(2)
Positional Measurement	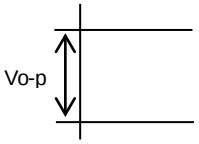	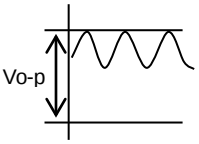	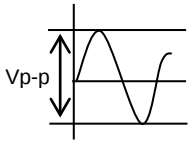	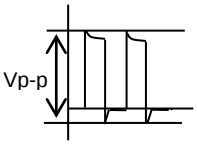	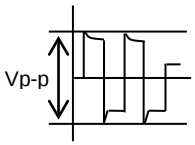

2. OPERATING TEMPERATURE AND SELF-GENERATED HEAT

Keep the surface temperature of a capacitor below the upper limit of its rated operating temperature range. Be sure to take into account the heat generated by the capacitor itself.

When the capacitor is used in a high-frequency current, pulse current or the like, it may have the self-generated heat due to dielectric-loss. In case of Class 2 capacitors (Temp.Char. : X7R,X7S,X8L, etc.), applied voltage should be the load such as self-generated heat is within 20 °C on the condition of atmosphere temperature 25 °C. Please contact us if self-generated heat is occurred with Class 1 capacitors (Temp.Char. : C0G,U2J,X8G, etc.). When measuring, use a thermocouple of small thermal capacity-K of ϕ0.1mm and be in the condition where capacitor is not affected by radiant heat of other components and wind of surroundings. Excessive heat may lead to deterioration of the capacitor's characteristics and reliability.

3. Fail-safe

Be sure to provide an appropriate fail-safe function on your product to prevent a second damage that may be caused by the abnormal function or the failure of our product.

4. OPERATING AND STORAGE ENVIRONMENT

The insulating coating of capacitors does not form a perfect seal; therefore, do not use or store capacitors in a corrosive atmosphere, especially where chloride gas, sulfide gas, acid, alkali, salt or the like are present. And avoid exposure to moisture. Before cleaning, bonding, or molding this product, verify that these processes do not affect product quality by testing the performance of a cleaned, bonded or molded product in the intended equipment. Store the capacitors where the temperature and relative humidity do not exceed 5 to 40 °C and 20 to 70%. Use capacitors within 6 months.

5. VIBRATION AND IMPACT

Do not expose a capacitor or its leads to excessive shock or vibration during use.

6. SOLDERING

When soldering this product to a PCB/PWB, do not exceed the solder heat resistance specification of the capacitor. Subjecting this product to excessive heating could melt the internal junction solder and may result in thermal shocks that can crack the ceramic element.

7. BONDING AND RESIN MOLDING, RESIN COAT

In case of bonding, molding or coating this product, verify that these processes do not affect the quality of capacitor by testing the performance of a bonded or molded product in the intended equipment.

In case of the amount of applications, dryness / hardening conditions of adhesives and molding resins containing organic solvents (ethyl acetate, methyl ethyl ketone, toluene, etc.) are unsuitable, the outer coating resin of a capacitor is damaged by the organic solvents and it may result, worst case, in a short circuit.

The variation in thickness of adhesive or molding resin may cause a outer coating resin cracking and/or ceramic element cracking of a capacitor in a temperature cycling.

8. TREATMENT AFTER BONDING AND RESIN MOLDING, RESIN COAT

When the outer coating is hot (over 100 °C) after soldering, it becomes soft and fragile.

So please be careful not to give it mechanical stress.

Failure to follow the above cautions may result, worst case, in a short circuit and cause fuming or partial dispersion when the product is used.

9. LIMITATION OF APPLICATIONS

Please contact us before using our products for the applications listed below which require especially high reliability for the prevention of defects which might directly cause damage to the third party's life, body or property.

1. Aircraft equipment
2. Aerospace equipment
3. Undersea equipment
4. Power plant control equipment
5. Medical equipment
6. Transportation equipment (vehicles, trains, ships, etc.)
7. Traffic signal equipment
8. Disaster prevention / crime prevention equipment
9. Data-processing equipment exerting influence on public
10. Application of similar complexity and/or reliability requirements to the applications listed in the above.

NOTICE

1. CLEANING (ULTRASONIC CLEANING)

To perform ultrasonic cleaning, observe the following conditions.
Rinse bath capacity : Output of 20 watts per liter or less.
Rinsing time : 5 min maximum.
Do not vibrate the PCB/PWB directly.
Excessive ultrasonic cleaning may lead to fatigue destruction of the lead wires.

2. Soldering and Mounting

Insertion of the Lead Wire

- When soldering, insert the lead wire into the PCB without mechanically stressing the lead wire.
- Insert the lead wire into the PCB with a distance appropriate to the lead space.

3. CAPACITANCE CHANGE OF CAPACITORS

- Class 2 capacitors (Temp.Char. : X7R,X7S,X8L, etc.)

Class 2 capacitors an aging characteristic, whereby the capacitor continually decreases its capacitance slightly if the capacitor leaves for a long time. Moreover, capacitance might change greatly depending on a surrounding temperature or an applied voltage. So, it is not likely to be able to use for the time constant circuit.
Please contact us if you need a detail information.

⚠ NOTE

1. Please make sure that your product has been evaluated in view of your specifications with our product being mounted to your product.
2. You are requested not to use our product deviating from this specification.

1. Application

This specification is applied to 200°C Operation Leaded MLCC RHS series in accordance with AEC-Q200 requirements used for Automotive Electronic equipment.

2. Rating

- Applied maximum temperature up to 200°C

  Note : Maximum accumulative time to 200°C is within 2000 hours.

- Part number configuration

ex.)	RHS	7G	2A	101	J	0	A2	H01	B
	Series	Temperature Characteristic	Rated voltage	Capacitance	Capacitance tolerance	Dimension code	Lead code	Individual specification code	Packing style code

- Series

Code	Content
RHS	Epoxy coated, 200°C max.

- Temperature characteristic

Code	Temp. Char.	Temp. Range	Temp. coeff.(ppm/°C)	Standard Temp.	Operating Temp. Range
7G	CCG (Murata code)	-55～25°C	0+30/-72	25°C	-55～200°C
		25～125°C	0±30		
		125～200°C	0+72/-30		

- Rated voltage

Code	Rated voltage
2A	DC100V

When the product temperature exceeds 150°C, please use this product within the voltage and temperature derated conditions in the figure below.

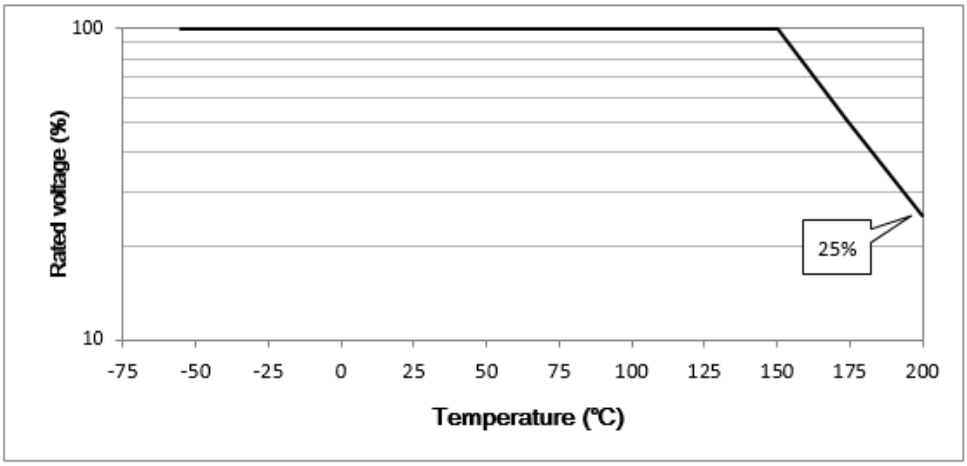

- Capacitance

  The first two digits denote significant figures ; the last digit denotes the multiplier of 10 in pF.

  ex.) In case of 101.

  $10 \times 10^1 = 100pF$

- Capacitance tolerance

Code	Capacitance tolerance
J	+/-5%

- Dimension code

Code	Dimensions (LxW) mm max.
0	3.9 x 3.5
1	4.2 x 3.5

- Lead code

Code	Lead style	Lead spacing (mm)
A2	Straight type	2.5+/-0.8
DG	Straight taping type	2.5+0.4/-0.2
K1	Inside crimp type	5.0+/-0.8
M2	Inside crimp taping type	5.0+0.6/-0.2

Lead wire is solder coated CP wire.

- Individual specification code
  Murata's control code
  Please refer to [Part number list].

- Packing style code

Code	Packing style
A	Taping type of Ammo
B	Bulk type

3. Marking

Temp. char. : Letter code : 4 (CCG char.)
Capacitance : 3 digit numbers
Capacitance tolerance : Code

(Ex.)

Rated voltage / Dimension code	100V
0,1	4 101J

4. Part number list

・Straight Long
(Lead Code:A2)

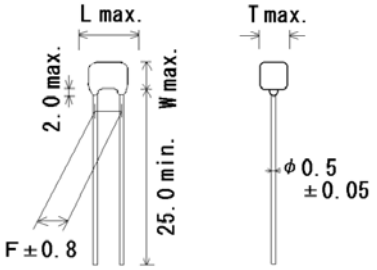

・Inside Crimp
(Lead Code:K1)

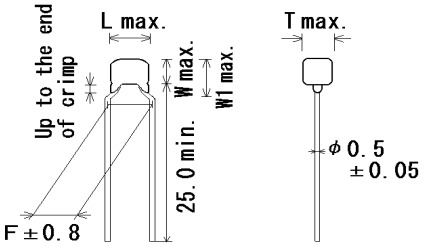

Unit : mm

Customer Part Number	Murata Part Number	T.C.	DC Rated Volt. (V)	Cap.	Cap. tol.	Dimension (mm)					Size Lead Code	Pack qty. (pcs)
						L	W	W1	F	T		
	RHS7G2A101J0A2H01B	CCG	100	100pF	±5%	3.9	3.5	-	2.5	2.6	0A2	500
	RHS7G2A121J0A2H01B	CCG	100	120pF	±5%	3.9	3.5	-	2.5	2.6	0A2	500
	RHS7G2A151J0A2H01B	CCG	100	150pF	±5%	3.9	3.5	-	2.5	2.6	0A2	500
	RHS7G2A181J0A2H01B	CCG	100	180pF	±5%	3.9	3.5	-	2.5	2.6	0A2	500
	RHS7G2A221J0A2H01B	CCG	100	220pF	±5%	3.9	3.5	-	2.5	2.6	0A2	500
	RHS7G2A271J0A2H01B	CCG	100	270pF	±5%	3.9	3.5	-	2.5	2.6	0A2	500
	RHS7G2A331J0A2H01B	CCG	100	330pF	±5%	3.9	3.5	-	2.5	2.6	0A2	500
	RHS7G2A391J0A2H01B	CCG	100	390pF	±5%	3.9	3.5	-	2.5	2.6	0A2	500
	RHS7G2A471J0A2H01B	CCG	100	470pF	±5%	3.9	3.5	-	2.5	2.6	0A2	500
	RHS7G2A561J0A2H01B	CCG	100	560pF	±5%	3.9	3.5	-	2.5	2.6	0A2	500
	RHS7G2A681J0A2H01B	CCG	100	680pF	±5%	3.9	3.5	-	2.5	2.6	0A2	500
	RHS7G2A821J0A2H01B	CCG	100	820pF	±5%	3.9	3.5	-	2.5	2.6	0A2	500
	RHS7G2A102J0A2H01B	CCG	100	1000pF	±5%	3.9	3.5	-	2.5	2.6	0A2	500
	RHS7G2A122J0A2H01B	CCG	100	1200pF	±5%	3.9	3.5	-	2.5	2.6	0A2	500
	RHS7G2A152J0A2H01B	CCG	100	1500pF	±5%	3.9	3.5	-	2.5	2.6	0A2	500
	RHS7G2A182J1A2H01B	CCG	100	1800pF	±5%	4.2	3.5	-	2.5	2.8	1A2	500
	RHS7G2A222J1A2H01B	CCG	100	2200pF	±5%	4.2	3.5	-	2.5	2.8	1A2	500
	RHS7G2A272J1A2H01B	CCG	100	2700pF	±5%	4.2	3.5	-	2.5	2.8	1A2	500
	RHS7G2A332J1A2H01B	CCG	100	3300pF	±5%	4.2	3.5	-	2.5	2.8	1A2	500
	RHS7G2A101J0K1H01B	CCG	100	100pF	±5%	3.9	3.5	6.0	5.0	2.6	0K1	500
	RHS7G2A121J0K1H01B	CCG	100	120pF	±5%	3.9	3.5	6.0	5.0	2.6	0K1	500
	RHS7G2A151J0K1H01B	CCG	100	150pF	±5%	3.9	3.5	6.0	5.0	2.6	0K1	500
	RHS7G2A181J0K1H01B	CCG	100	180pF	±5%	3.9	3.5	6.0	5.0	2.6	0K1	500
	RHS7G2A221J0K1H01B	CCG	100	220pF	±5%	3.9	3.5	6.0	5.0	2.6	0K1	500
	RHS7G2A271J0K1H01B	CCG	100	270pF	±5%	3.9	3.5	6.0	5.0	2.6	0K1	500
	RHS7G2A331J0K1H01B	CCG	100	330pF	±5%	3.9	3.5	6.0	5.0	2.6	0K1	500
	RHS7G2A391J0K1H01B	CCG	100	390pF	±5%	3.9	3.5	6.0	5.0	2.6	0K1	500
	RHS7G2A471J0K1H01B	CCG	100	470pF	±5%	3.9	3.5	6.0	5.0	2.6	0K1	500
	RHS7G2A561J0K1H01B	CCG	100	560pF	±5%	3.9	3.5	6.0	5.0	2.6	0K1	500
	RHS7G2A681J0K1H01B	CCG	100	680pF	±5%	3.9	3.5	6.0	5.0	2.6	0K1	500
	RHS7G2A821J0K1H01B	CCG	100	820pF	±5%	3.9	3.5	6.0	5.0	2.6	0K1	500
	RHS7G2A102J0K1H01B	CCG	100	1000pF	±5%	3.9	3.5	6.0	5.0	2.6	0K1	500
	RHS7G2A122J0K1H01B	CCG	100	1200pF	±5%	3.9	3.5	6.0	5.0	2.6	0K1	500
	RHS7G2A152J0K1H01B	CCG	100	1500pF	±5%	3.9	3.5	6.0	5.0	2.6	0K1	500
	RHS7G2A182J1K1H01B	CCG	100	1800pF	±5%	4.2	3.5	5.0	5.0	2.8	1K1	500
	RHS7G2A222J1K1H01B	CCG	100	2200pF	±5%	4.2	3.5	5.0	5.0	2.8	1K1	500
	RHS7G2A272J1K1H01B	CCG	100	2700pF	±5%	4.2	3.5	5.0	5.0	2.8	1K1	500
	RHS7G2A332J1K1H01B	CCG	100	3300pF	±5%	4.2	3.5	5.0	5.0	2.8	1K1	500

Reference only

・Straight Taping
(Lead Code:DG)

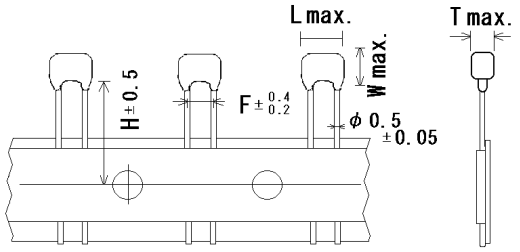

・Inside Crimp Taping
(Lead Code: M2)

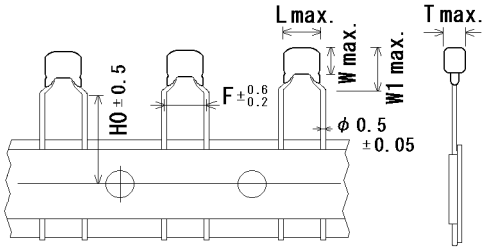

Unit : mm

Customer Part Number	Murata Part Number	T.C.	DC Rated volt. (V)	Cap.	Cap. tol.	Dimension (mm)						Size Lead Code	Pack qty. (pcs)
						L	W	W1	F	T	H/H0		
	RHS7G2A101J0DGH01A	CCG	100	100pF	±5%	3.9	3.5	-	2.5	2.6	20.0	0DG	2000
	RHS7G2A121J0DGH01A	CCG	100	120pF	±5%	3.9	3.5	-	2.5	2.6	20.0	0DG	2000
	RHS7G2A151J0DGH01A	CCG	100	150pF	±5%	3.9	3.5	-	2.5	2.6	20.0	0DG	2000
	RHS7G2A181J0DGH01A	CCG	100	180pF	±5%	3.9	3.5	-	2.5	2.6	20.0	0DG	2000
	RHS7G2A221J0DGH01A	CCG	100	220pF	±5%	3.9	3.5	-	2.5	2.6	20.0	0DG	2000
	RHS7G2A271J0DGH01A	CCG	100	270pF	±5%	3.9	3.5	-	2.5	2.6	20.0	0DG	2000
	RHS7G2A331J0DGH01A	CCG	100	330pF	±5%	3.9	3.5	-	2.5	2.6	20.0	0DG	2000
	RHS7G2A391J0DGH01A	CCG	100	390pF	±5%	3.9	3.5	-	2.5	2.6	20.0	0DG	2000
	RHS7G2A471J0DGH01A	CCG	100	470pF	±5%	3.9	3.5	-	2.5	2.6	20.0	0DG	2000
	RHS7G2A561J0DGH01A	CCG	100	560pF	±5%	3.9	3.5	-	2.5	2.6	20.0	0DG	2000
	RHS7G2A681J0DGH01A	CCG	100	680pF	±5%	3.9	3.5	-	2.5	2.6	20.0	0DG	2000
	RHS7G2A821J0DGH01A	CCG	100	820pF	±5%	3.9	3.5	-	2.5	2.6	20.0	0DG	2000
	RHS7G2A102J0DGH01A	CCG	100	1000pF	±5%	3.9	3.5	-	2.5	2.6	20.0	0DG	2000
	RHS7G2A122J0DGH01A	CCG	100	1200pF	±5%	3.9	3.5	-	2.5	2.6	20.0	0DG	2000
	RHS7G2A152J0DGH01A	CCG	100	1500pF	±5%	3.9	3.5	-	2.5	2.6	20.0	0DG	2000
	RHS7G2A182J1DGH01A	CCG	100	1800pF	±5%	4.2	3.5	-	2.5	2.8	20.0	1DG	2000
	RHS7G2A222J1DGH01A	CCG	100	2200pF	±5%	4.2	3.5	-	2.5	2.8	20.0	1DG	2000
	RHS7G2A272J1DGH01A	CCG	100	2700pF	±5%	4.2	3.5	-	2.5	2.8	20.0	1DG	2000
	RHS7G2A332J1DGH01A	CCG	100	3300pF	±5%	4.2	3.5	-	2.5	2.8	20.0	1DG	2000
	RHS7G2A101J0M2H01A	CCG	100	100pF	±5%	3.9	3.5	6.0	5.0	2.6	20.0	0M2	2000
	RHS7G2A121J0M2H01A	CCG	100	120pF	±5%	3.9	3.5	6.0	5.0	2.6	20.0	0M2	2000
	RHS7G2A151J0M2H01A	CCG	100	150pF	±5%	3.9	3.5	6.0	5.0	2.6	20.0	0M2	2000
	RHS7G2A181J0M2H01A	CCG	100	180pF	±5%	3.9	3.5	6.0	5.0	2.6	20.0	0M2	2000
	RHS7G2A221J0M2H01A	CCG	100	220pF	±5%	3.9	3.5	6.0	5.0	2.6	20.0	0M2	2000
	RHS7G2A271J0M2H01A	CCG	100	270pF	±5%	3.9	3.5	6.0	5.0	2.6	20.0	0M2	2000
	RHS7G2A331J0M2H01A	CCG	100	330pF	±5%	3.9	3.5	6.0	5.0	2.6	20.0	0M2	2000
	RHS7G2A391J0M2H01A	CCG	100	390pF	±5%	3.9	3.5	6.0	5.0	2.6	20.0	0M2	2000
	RHS7G2A471J0M2H01A	CCG	100	470pF	±5%	3.9	3.5	6.0	5.0	2.6	20.0	0M2	2000
	RHS7G2A561J0M2H01A	CCG	100	560pF	±5%	3.9	3.5	6.0	5.0	2.6	20.0	0M2	2000
	RHS7G2A681J0M2H01A	CCG	100	680pF	±5%	3.9	3.5	6.0	5.0	2.6	20.0	0M2	2000
	RHS7G2A821J0M2H01A	CCG	100	820pF	±5%	3.9	3.5	6.0	5.0	2.6	20.0	0M2	2000
	RHS7G2A102J0M2H01A	CCG	100	1000pF	±5%	3.9	3.5	6.0	5.0	2.6	20.0	0M2	2000
	RHS7G2A122J0M2H01A	CCG	100	1200pF	±5%	3.9	3.5	6.0	5.0	2.6	20.0	0M2	2000
	RHS7G2A152J0M2H01A	CCG	100	1500pF	±5%	3.9	3.5	6.0	5.0	2.6	20.0	0M2	2000
	RHS7G2A182J1M2H01A	CCG	100	1800pF	±5%	4.2	3.5	5.0	5.0	2.8	20.0	1M2	2000
	RHS7G2A222J1M2H01A	CCG	100	2200pF	±5%	4.2	3.5	5.0	5.0	2.8	20.0	1M2	2000
	RHS7G2A272J1M2H01A	CCG	100	2700pF	±5%	4.2	3.5	5.0	5.0	2.8	20.0	1M2	2000
	RHS7G2A332J1M2H01A	CCG	100	3300pF	±5%	4.2	3.5	5.0	5.0	2.8	20.0	1M2	2000

5. AEC-Q200 Murata Standard Specifications and Test Methods

No.	AEC-Q200 Test Item		Specification	AEC-Q200 Test Method
1	Pre-and Post-Stress Electrical Test		-	
2	High Temperature Exposure (Storage)	Appearance	No defects or abnormalities except color change of outer coating.	Sit the capacitor for 1,000±12h at 200±5°C. Let sit for 24±2h at *room condition, then measure.
		Capacitance Change	Within ±3% or ±0.3pF (Whichever is larger)	
		Q	Q ≥ 350	
		I.R.	1,000MΩ min.	
3	Temperature Cycling	Appearance	No defects or abnormalities except color change of outer coating	Perform the 1,000 cycles according to the four heat treatments listed in the following table. Let sit for 24±2 h at *room condition, then measure.
		Capacitance Change	Within ±5% or ±0.5pF (Whichever is larger)	
		Q	Q ≥ 350	
		I.R.	1,000MΩ min.	

Step	1	2	3	4
Temp. (°C)	-55+0/-3	Room Temp.	200+5/-0	Room Temp.
Time (min.)	15±3	1	15±3	1

No.	AEC-Q200 Test Item		Specification	AEC-Q200 Test Method
4	Moisture Resistance	Appearance	No defects or abnormalities	Apply the 24h heat (25 to 65°C) and humidity (80 to 98%) treatment shown below, 10 consecutive times. Let sit for 24±2 h at *room condition, then measure.
		Capacitance Change	Within ±5% or ± 0.5pF (Whichever is larger)	
		Q	Q ≥ 200	
		I.R.	500MΩ min.	

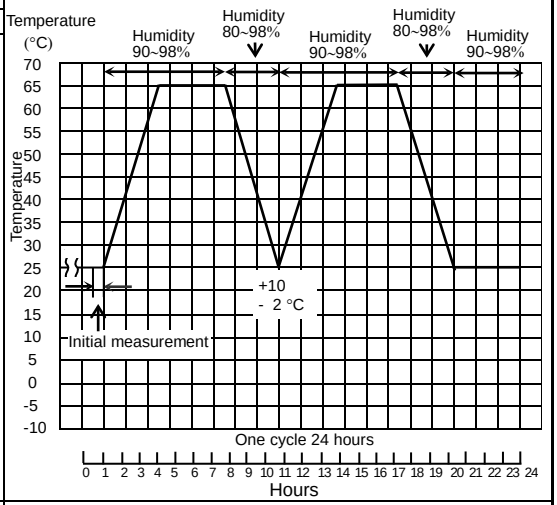

No.	AEC-Q200 Test Item		Specification	AEC-Q200 Test Method
5	Biased Humidity	Appearance	No defects or abnormalities	Apply the rated voltage and DC1.3+0.2/-0 V (add 100kΩ resistor) at 85±3°C and 80 to 85% humidity for 1,000±12h. Remove and let sit for 24±2 h at *room condition, then measure. The charge/discharge current is less than 50mA.
		Capacitance Change	Within ±5% or ± 0.5pF (Whichever is larger)	
		Q	Q ≥ 200	
		I.R.	500MΩ min.	
6	Operational Life	Appearance	No defects or abnormalities except color change of outer coating	Apply 25% of the rated voltage for 1,000±12h at 200±5°C. Let sit for 24±2 h at *room condition, then measure. The charge/discharge current is less than 50mA.
		Capacitance Change	Within ±3% or ±0.3pF (Whichever is larger)	
		Q	Q ≥ 350	
		I.R.	1,000MΩ min.	
7	External Visual		No defects or abnormalities	Visual inspection
8	Physical Dimension		Within the specified dimensions	Using calipers and micrometers.
9	Marking		To be easily legible.	Visual inspection
10	Resistance to Solvents	Appearance	No defects or abnormalities	Per MIL-STD-202 Method 215 Solvent 1 : 1 part (by volume) of isopropyl alcohol 3 parts (by volume) of mineral spirits Solvent 2 : Terpene defluxer Solvent 3 : 42 parts (by volume) of water 1part (by volume) of propylene glycol monomethyl ether 1 part (by volume) of monoethanolamine
		Capacitance	Within the specified tolerance	
		Q	Q ≥ 1,000	
		I.R.	10,000MΩ min.	

* "room condition" Temperature:15 to 35°C, Relative humidity:45 to 75%, Atmosphere pressure:86 to 106kPa

No.	AEC-Q200 Test Item		Specification	AEC-Q200 Test Method
11	Mechanical Shock	Appearance	No defects or abnormalities	Three shocks in each direction should be applied along 3 mutually perpendicular axes of the test specimen (18 shocks). The specified test pulse should be Half-sine and should have a duration :0.5ms, peak value:1,500G and velocity change: 4.7m/s.
		Capacitance	Within the specified tolerance	
		Q	Q ≥ 1,000	
12	Vibration	Appearance	No defects or abnormalities	The capacitor should be subjected to a simple harmonic motion having a total amplitude of 1.5mm, the frequency being varied uniformly between the approximate limits of 10 and 2,000Hz. The frequency range, from 10 to 2,000Hz and return to 10Hz, should be traversed in approximately 20 min. This motion should be applied for 12 items in each 3 mutually perpendicular directions (total of 36 times).
		Capacitance	Within the specified tolerance	
		Q	Q ≥ 1,000	
13-1	Resistance to Soldering Heat (Non-Preheat)	Appearance	No defects or abnormalities	The lead wires should be immersed in the melted solder 1.5 to 2.0mm from the root of terminal at 260±5°C for 10±1 seconds. • Post-treatment Capacitor should be stored for 24±2 hours at *room condition.
		Capacitance Change	Within ±2.5% or ±0.25pF (Whichever is larger)	
		Dielectric Strength (Between terminals)	No defects	
13-2	Resistance to Soldering Heat (On-Preheat)	Appearance	No defects or abnormalities	First the capacitor should be stored at 120+0/-5°C for 60+0/-5 seconds. Then, the lead wires should be immersed in the melted solder 1.5 to 2.0mm from the root of terminal at 260±5°C for 7.5+0/-1 seconds. • Post-treatment Capacitor should be stored for 24±2 hours at *room condition.
		Capacitance Change	Within ±2.5% or ±0.25pF (Whichever is larger)	
		Dielectric Strength (Between terminals)	No defects	
13-3	Resistance to Soldering Heat (soldering iron method)	Appearance	No defects or abnormalities	Test condition Termperature of iron-tip : 350±10°C Soldering time : 3.5±0.5 seconds Soldering position Straight Lead:1.5 to 2.0mm from the root of terminal. Crimp Lead:1.5 to 2.0mm from the end of lead bend. • Post-treatment Capacitor should be stored for 24±2 hours at *room condition.
		Capacitance Change	Within ±2.5% or ±0.25pF (Whichever is larger)	
		Dielectric Strength (Between terminals)	No defects	
14	Thermal Shock	Appearance	No defects or abnormalities	Perform the 300 cycles according to the two heat treatments listed in the following table(Maximum transfer time is 20s.). Let sit for 24±2 h at *room condition, then measure. Step: 1 / 2 Temp. (°C): -55+0/-3 / 200+5/-0 Time (min.): 15±3 / 15±3
		Capacitance Change	Within ±5% or ±0.5pF (Whichever is larger)	
		Q	Q ≥ 350	
		I.R.	1,000MΩ min.	
15	ESD	Appearance	No defects or abnormalities	Per AEC-Q200-002
		Capacitance	Within the specified tolerance	
		Q	Q ≥ 1,000	
		I.R.	10,000MΩ min.	
16	Solderability		Lead wire should be soldered with uniform coating on the axial direction over 95% of the circumferential direction.	The terminal of a capacitor is dipped into a solution of ethanol (JIS-K-8101) and rosin (JIS-K-5902) (25%rosin in weight propotion) and then into molten solder (JIS-Z-3282) for 2±0.5 sec. In both cases the depth of dipping is up to about 1.5 to 2mm from the terminal body. Temp. of solder : 245±5°C Lead Free Solder(Sn-3.0Ag-0.5Cu) 235±5°C H60A or H63A Eutectic Solder

* "room condition" Temperature:15 to 35°C, Relative humidity:45 to 75%, Atmosphere pressure:86 to 106kPa

No.	AEC-Q200 Test Item		Specifications		AEC-Q200 Test Method
17	Electrical Characte-rization	Apperance	No defects or abnormalities		Visual inspection.
		Capacitance	Within the specified tolerance		The capacitance, Q should be measured at 25°C at the frequency and voltage shown in the table. Nominal Cap. / Frequency / Voltage C ≤ 1000pF / 1±0.1MHz / AC0.5 to 5V(rms) C > 1000pF / 1±0.1kHz / AC1±0.2V(rms)
		Q	Q ≥ 1,000		
		Insulation Resistance (I.R.)	Room Temperature	10,000MΩ min.	The insulation resistance should be measured at 25±3 °C with a DC voltage not exceeding the rated voltage at normal temperature and humidity and within 2 min. of charging. (Charge/Discharge current ≤ 50mA)
			High Temperature	20MΩ min.	The insulation resistance should be measured at 200±5 °C with a DC voltage not exceeding 25% of the rated voltage and within 2 min. of charging. (Charge/Discharge current ≤ 50mA)
		Dielectric Strength	Between Terminals	No defects or abnormalities	The capacitor should not be damaged when voltage in Table is applied between the terminations for 1 to 5 seconds. (Charge/Discharge current ≤ 50mA.) Rated voltage / Test voltage DC100V / 300% of the rated voltage
			Body Insulation	No defects or abnormalities	The capacitor is placed in a container with metal balls of 1mm diameter so that each terminal, short-circuit, is kept approximately 2mm from the balls as shown in the figure, and voltage in table is impressed for 1 to 5 seconds between capacitor terminals and metal balls. (Charge/Discharge current ≤ 50mA.) 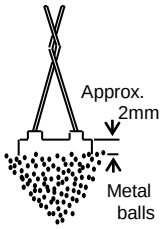 Rated voltage / Test voltage DC100V / 250% of the rated voltage
18	Terminal Strength	Tensile Strength	Termination not to be broken or loosened		As in the figure, fix the capacitor body, apply the force gradually to each lead in the radial direction of the capacitor until reaching 10N and then keep the force applied for 10±1 seconds. 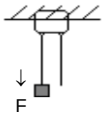
		Bending Strength	Termination not to be broken or loosened		Each lead wire should be subjected to a force of 2.5N and then be bent 90° at the point of egress in one direction. Each wire is then returned to the original position and bent 90° in the opposite direction at the rate of one bend per 2 to 3 seconds.
19	Capacitance Temperature Characteristics		Within the specified Tolerance. 0+30/-72ppm/°C (-55～25°C) 0±30ppm/°C (25～125°C) 0+72/-30ppm/°C (125～200°C)		The capacitance change should be measured after 5min. at each specified temperature step. Step / Temperature(°C) 1 / 25±2 2 / -55±3 3 / 25±2 4 / 200±5 5 / 25±2 The temperature coefficient is determind using the capacitance measured in step 3 as a reference. When cycling the temperature sequentially from step 1 through 5 (-55°C to +150°C) the capacitance should be within the specified tolerance for the temperature coefficient and capacitance change as Table A. The capacitance drift is caluculated by dividing the differences betweeen the maximum and minimum measured values in the step 1, 3 and 5 by the capacitance value in step 3.

* "room condition" Temperature:15 to 35°C, Relative humidity:45 to 75%, Atmosphere pressure:86 to 106kPa

6. Packing specification

•Bulk type (Packing style code : B)

The number of packing ^{*1} = Packing quantity ^{*2} × n

The size of packing case and packing way

∗1 : Please refer to [Part number list].
∗2 : Standard n = 20 (bag)

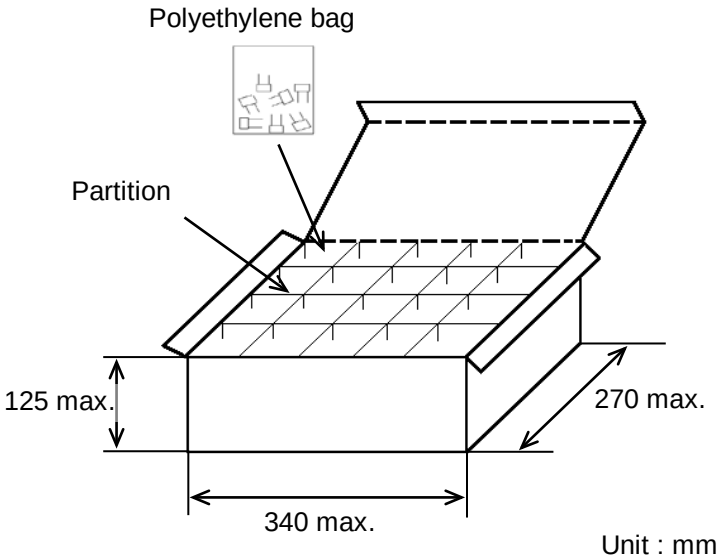

Note)
The outer package and the number of outer packing be changed by the order getting amount.

•Ammo pack taping type (Packing style code : A)

· A crease is made every 25 pitches, and the tape with capacitors is packed zigzag into a case.
· When body of the capacitor is piled on other body under it.

The size of packing case and packing way

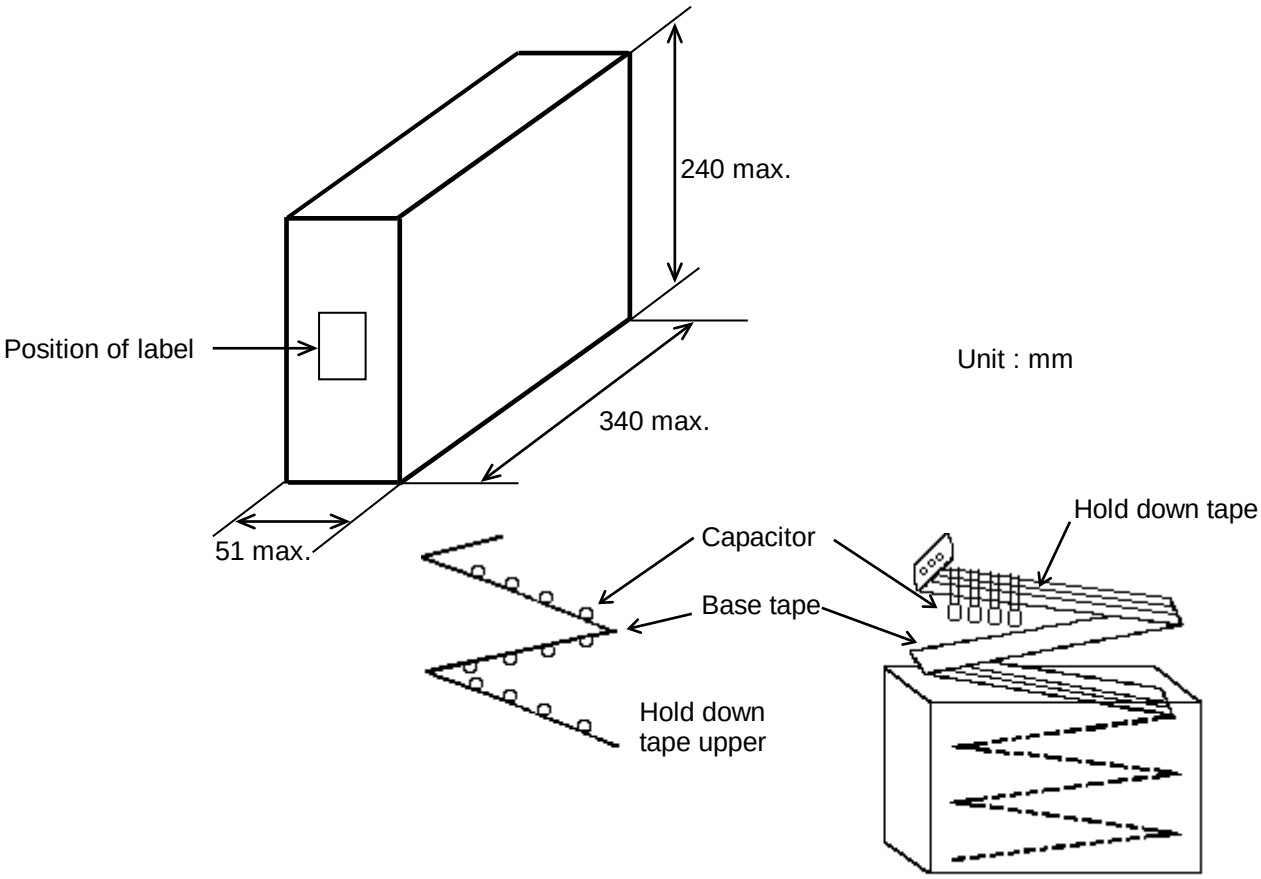

7. Taping specification

7-1. Dimension of capacitors on tape

Straight taping type < Lead code : DG >

Pitch of component 12.7mm / Lead spacing 2.5mm

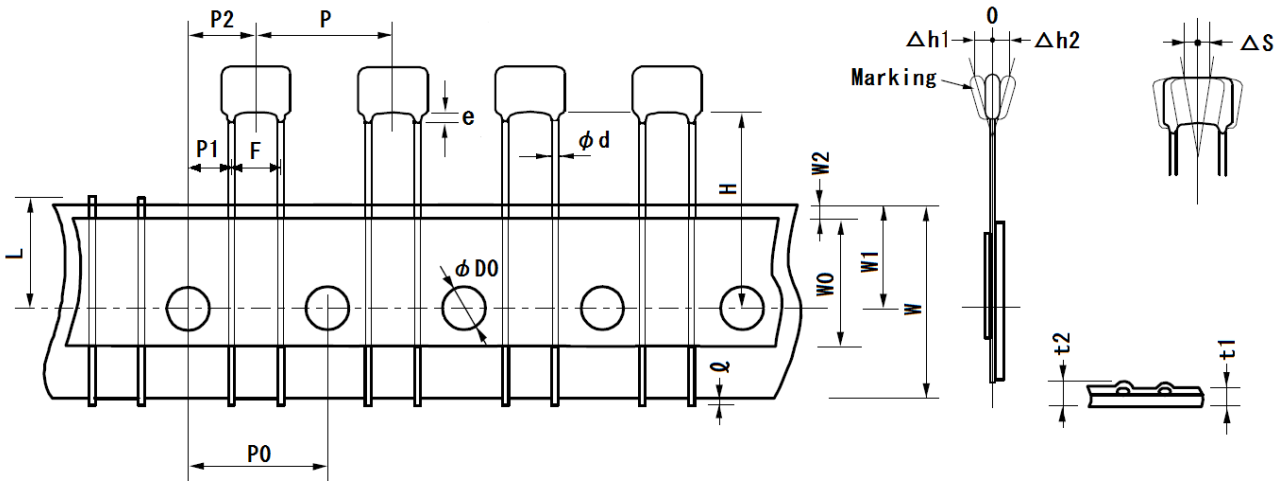

Unit : mm

Item	Code	Dimensions	Remarks
Pitch of component	P	12.7+/-1.0	
Pitch of sprocket hole	P0	12.7+/-0.2	
Lead spacing	F	2.5+0.4/-0.2	
Length from hole center to component center	P2	6.35+/-1.3	Deviation of progress direction
Length from hole center to lead	P1	5.1+/-0.7	
Deviation along tape, left or right defect	ΔS	0+/-2.0	They include deviation by lead bend .
Carrier tape width	W	18.0+/-0.5	
Position of sprocket hole	W1	9.0+0/-0.5	Deviation of tape width direction
Lead distance between reference and bottom plane	H	20.0+/-0.5	
Protrusion length	ℓ	0.5 max.	
Diameter of sprocket hole	D0	4.0+/-0.1	
Lead diameter	d	0.50+/-0.05	
Total tape thickness	t1	0.6+/-0.3	They include hold down tape thickness.
Total thickness of tape and lead wire	t2	1.5 max.	
Deviation across tape	Δh1	1.0 max.	
	Δh2		
Portion to cut in case of defect	L	11.0+0/-1.0	
Hold down tape width	W0	9.5 min.	
Hold down tape position	W2	1.5+/-1.5	
Coating extension on lead	e	2.0 max.	

Inside crimp taping type < Lead code : M2 >
Pitch of component 12.7mm / Lead spacing 5.0mm

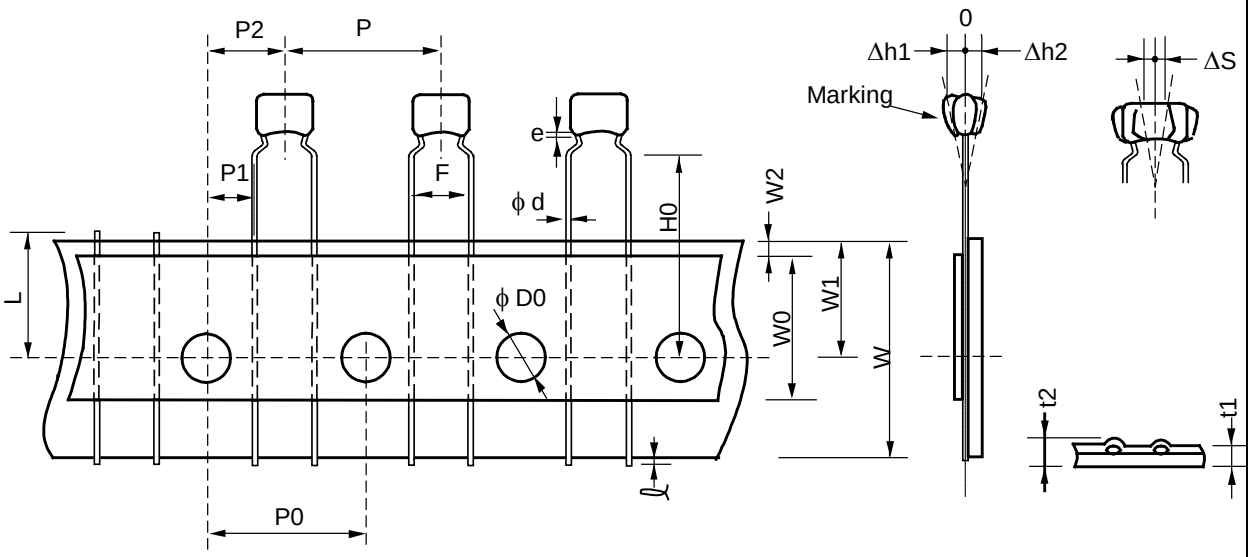

Unit : mm

Item	Code	Dimensions	Remarks
Pitch of component	P	12.7+/-1.0	
Pitch of sprocket hole	P0	12.7+/-0.2	
Lead spacing	F	5.0+0.6/-0.2	
Length from hole center to component center	P2	6.35+/-1.3	Deviation of progress direction
Length from hole center to lead	P1	3.85+/-0.7	
Deviation along tape, left or right defect	ΔS	0+/-2.0	They include deviation by lead bend .
Carrier tape width	W	18.0+/-0.5	
Position of sprocket hole	W1	9.0+0/-0.5	Deviation of tape width direction
Lead distance between reference and bottom plane	H0	20.0+/-0.5	
Protrusion length	ℓ	0.5 max.	
Diameter of sprocket hole	D0	4.0+/-0.1	
Lead diameter	ϕd	0.50+/-0.05	
Total tape thickness	t1	0.6+/-0.3	They include hold down tape thickness.
Total thickness of tape and lead wire	t2	1.5 max.	
Deviation across tape	Δh1	2.0 max.（Dimension code：W）	
	Δh2	1.0 max.（except as above）	
Portion to cut in case of defect	L	11.0+0/-1.0	
Hold down tape width	W0	9.5 min.	
Hold down tape position	W2	1.5+/-1.5	
Coating extension on lead	e	Up to the end of crimp	

7-2. Splicing way of tape

1) Adhesive force of tape is over 3N at test condition as below.

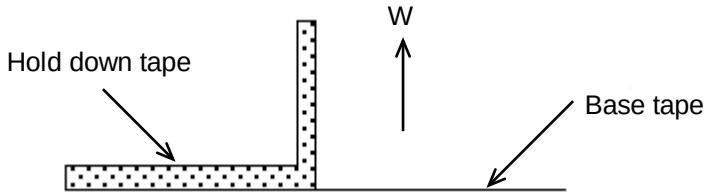

2) Splicing of tape

a) When base tape is spliced

•Base tape shall be spliced by cellophane tape.
(Total tape thickness shall be less than 1.05mm.)

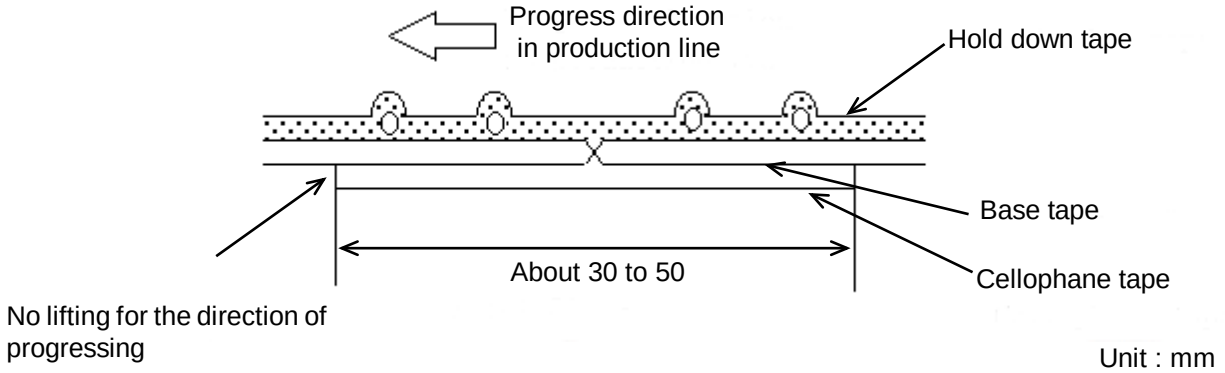

Unit : mm

b) When hold down tape is spliced

•Hold down tape shall be spliced with overlapping.
(Total tape thickness shall be less than 1.05mm.)

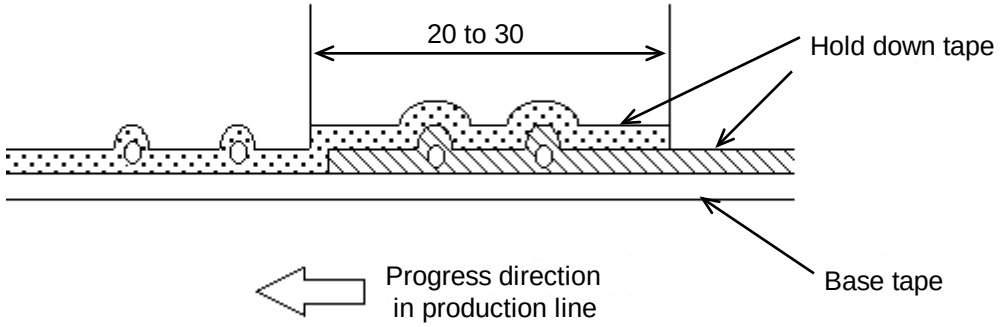

Unit : mm

c) When both tape are spliced

•Base tape and hold down tape shall be spliced with splicing tape.

EU RoHS and Halogen Free

This products of the following crresponds to EU RoHS and Halogen Free

(1) RoHS

EU RoHs 2011/65/EC compliance

maximum concentration values tolerated by weight in homogeneous materials
・1000 ppm maximum Lead
・1000 ppm maximum Mercury
・100 ppm maximum Cadmium
・1000 ppm maximum Hexavalent chromium
・1000 ppm maximum Polybrominated biphenyls (PBB)
・1000 ppm maximum Polybrominated diphenyl ethers (PBDE)

(2) Halogen-Free

The International Electrochemical Commission's (IEC) Definition
of Halogen-Free (IEC 61249-2-21) compliance

・900 ppm maximum chlorine
・900 ppm maximum bromine
・1500 ppm maximum total chlorine and bromine

Общество с ограниченной ответственностью «МосЧип» ИНН 7719860671 / КПП 771901001
Адрес: 105318, г.Москва, ул.Щербаковская д.3, офис 1107

Данный компонент на территории Российской Федерации

Вы можете приобрести в компании MosChip.

Для оперативного оформления запроса Вам необходимо перейти по данной ссылке:

http://moschip.ru/get-element

Вы можете разместить у нас заказ для любого Вашего проекта, будь то серийное производство или разработка единичного прибора.

В нашем ассортименте представлены ведущие мировые производители активных и пассивных электронных компонентов.

Нашей специализацией является поставка электронной компонентной базы двойного назначения, продукции таких производителей как XILINX, Intel (ex.ALTERA), Vicor, Microchip, Texas Instruments, Analog Devices, Mini-Circuits, Amphenol, Glenair.

Сотрудничество с глобальными дистрибьюторами электронных компонентов, предоставляет возможность заказывать и получать с международных складов практически любой перечень компонентов в оптимальные для Вас сроки.

На всех этапах разработки и производства наши партнеры могут получить квалифицированную поддержку опытных инженеров.

Система менеджмента качества компании отвечает требованиям в соответствии с ГОСТ Р ИСО 9001, ГОСТ РВ 0015-002 и ЭС РД 009

Офис по работе с юридическими лицами:

105318, г.Москва, ул.Щербаковская д.3, офис 1107, 1118, ДЦ «Щербаковский»

Телефон: +7 495 668-12-70 (многоканальный)

Факс: +7 495 668-12-70 (доб.304)

E-mail: info@moschip.ru

Skype отдела продаж:
moschip.ru
moschip.ru_4
moschip.ru_6
moschip.ru_9