CAMaster HRC Fuse Holders

CM_CF

30, 60, and 100 Amps; 600Vac

Catalog Symbol: CM_CF
CAMaster HRC Fuse Holders
30, 60, and 100 Amps
Agency Approvals: CSA C22.2 NO. 39
IEC 269 and BS88

- Range: 30 (miniature), 30, 60, and 100 Amps at 600Vac
- A range of fully shrouded HRC fuse holders having an advanced design.
- They incorporate a high level of innovation, with enhanced performance characteristics and comply with the requirements of: CSA C22.2 No. 39 as well as IEC 269 and BS88 standards.

Unique Cam Action

- The fuse carriers are fitted with a cam for ease of removal from the fuse bases allowing significantly improved contact pressure between fuse carrier and fuse base contacts, with a corresponding enhanced electrical performance level.
- This design overcomes a major problem of all existing dead front style fuse holders manufactured worldwide, which have to compromise between difficulties of fuse carrier removal from base and contact pressure achieved.

Lockable Safety Carriers

- A range of lockable safety carriers for the CAMaster fuse holder (Cat ref: LSC), are available.
- This distinct feature ensures isolation can be achieved allowing maintenance to be carried out in safety.

Mounting Torque and Cable Size

Ref	Fuse Mounting Tightening Torques	Max Cable Size
CM20CF	1.5N•m 1.11 lb-ft	#2
CM30CF	1.5N•m 1.11 lb-ft	#2
CM60CF	2.0N•m 1.48 lb-ft	2/0
CM100CF	2.0N•m 1.48 lb-ft	2/0

CAMaster Ratings

Rating	Details	Reference	Fuse Accommodated
30 Amp	For HRCI-CA Applications	CM20CF	---C1F21
30 Amp 60 Amp 100 Amp	For HRCII Applications	CM30CF CM60CF CM100CF	---H07C ---KO7C ---K07CR

Accessories for CAMaster Units

Rating	Details	Reference	Fuse Accommodated
30 Amp 30 Amp 60/100 Amp	Back Stud	20BS 30BS 60/100BS	For CM20CF For CM30CF For CM60/100CF
All	Ganging Link Kit	GLP	For 3-Pole
All	660V Neon Indicator	NI-660	–
All	600V Neon Indicator	NI-600	–
30 Amp 30 Amp 60/100 Amp	Security Carrier with Clip.	20LSC 30LSC 60/100LSC	For CM20CF For CM30CF For CM60/100CF
All	Clip Only	20CML	For all sizes

Panel Drilling Plans, Viewed from Front of Panel

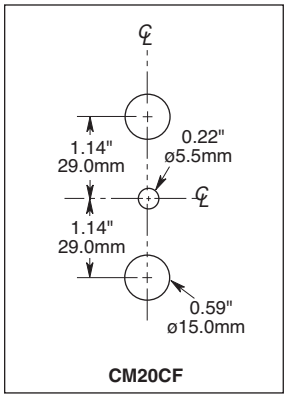

CM20CF

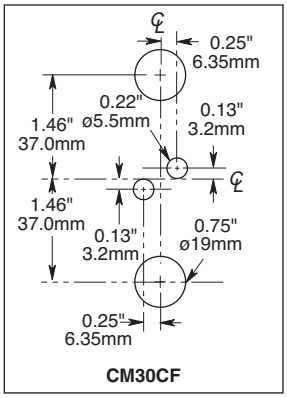

CM30CF

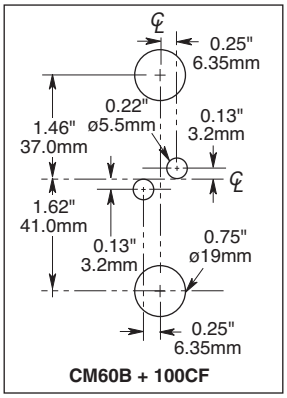

CM60B + 100CF

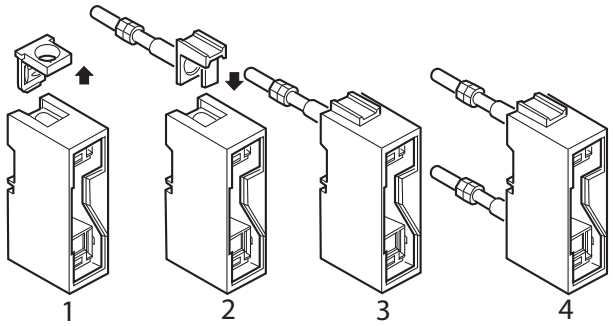

Figure 2. Unique Conversion Capability

Unique Conversion Capability

The standard fuse holders can be readily converted from front connection to front/back stud and double-back stud connection types at the point of use. This is achieved with a unique back stud accessory and the use of a screwdriver. See conversion sequence in Fig. 2. Steps 1, 2 and 3 show removal of ferrule end and insertion of back stud accessory to give the front/back stud connection type. This sequence repeated at the opposite end gives the double-back stud connection type shown in step 4.

Unique Cable Termination

The fuse holder's unique cable terminations are designed for user convenience and to ensure long-term reliability. They incorporate stainless steel saddles and hardened termination screws, maintaining permanent cable clamping to profiled contact plates. The main electrical contact path between the cable and fuse link tag is shown highlighted. This permits the use of high tightening torques without damage to cables or threads and provides resistance to high cable pull out forces. (See Fig. 3.) The fuse holders are supplied with the hardened termination screws backed out ready for cable insertion, saving installation time.

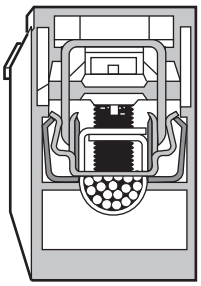
Figure 3. Unique Cable Termination

Hinged Captive Screws

The fuse fixing screws to fuse carrier are held in captive hinges providing ease of fixing and preventing loss during installation. (See Fig. 4.)

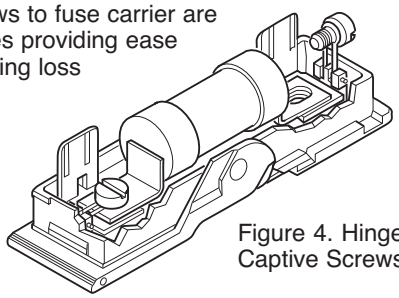
Figure 4. Hinged Captive Screws

Two/Three Pole Ganging

The unique design of the carriers allows ganging to be readily achieved by the use of standard accessories. This provides improved safety related to isolation and protection of 2-Pole and 3-Pole electrical circuits by ensuring that the correctly related poles are removed at the same time. (See Fig. 5.)

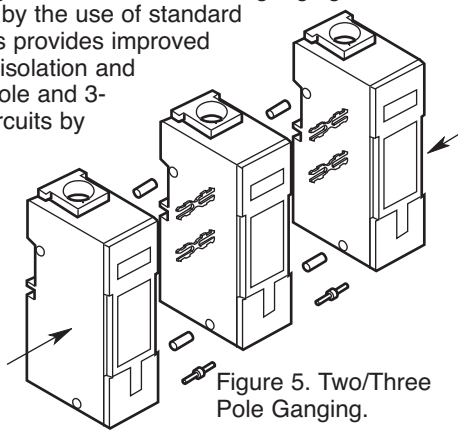
Figure 5. Two/Three Pole Ganging.

Dual Mounting Capability

The design as standard provides both bolted panel and DIN rail mounting features. The DIN rail mounting facility for each of the various dimensioned ratings is so designed as to give equal height and depth above the DIN rail.

Hinged Internal Shields

Non-removable full shrouding of live parts within the fuse base is provided by the use of hinged shields. The positive captive nature of these ensures that they cannot be omitted during installation and are so designed that insertion of the fuse carrier can only be made with them correctly positioned.

Neon Indicator

Neon clip-in indicator accessories are available providing clear location and status of fuses which have opened. (See Fig. 6.)

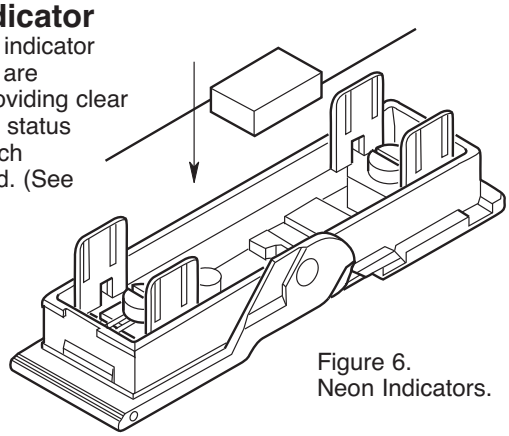
Figure 6. Neon Indicators.

Circuit Identification

The fuse carrier has a marking label for ease of circuit identification.

Strip Length Marking

The length of cable insulation that should be stripped off is shown on the side of the fuse base.

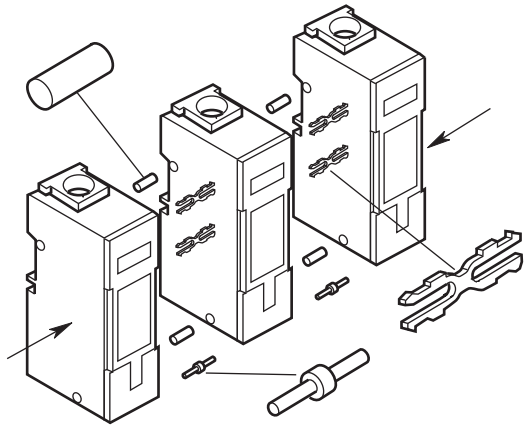

Figure 4. Two- and Three-Pole Ganging.

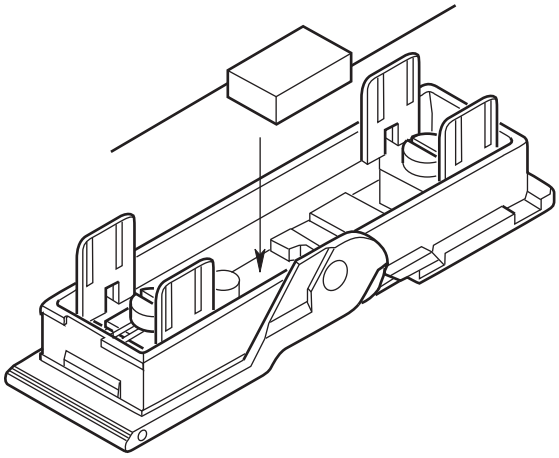

Figure 5. Neon Indicators.

Dimensions - in (mm)

Standard Front Connected Unit

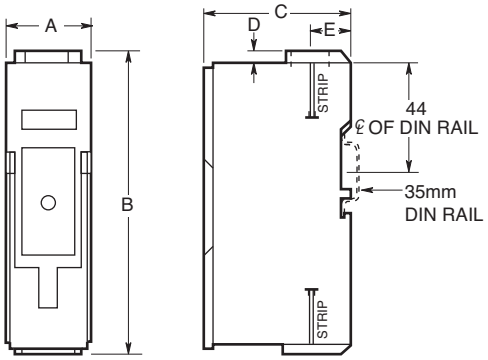

Front/Back Stud and Double Back Stud Connected Units

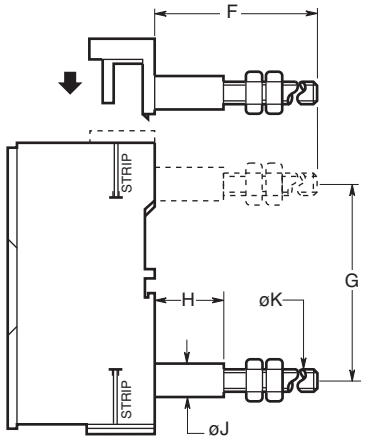

Rating Amps	Catalog Number	Category	Dimensions - in (mm) A	B	C	D	E	F	G	H	J	K
30	CM20CF	HRCI-CA	1.0 (25.4)	3.69 (93.7)	2.36 (60)	0.13 (3.2)	0.64 (17.5)	2.60 (66)	2.29 (58)	1.13 (28.6)	0.47 (11.9)	M6
30	CM30CF	HRCII-C	1.25 (31.8)	4.63 (117.5)	2.36 (60)	0.13 (3.2)	0.69 (17.5)	2.60 (66)	2.92 (74)	1.13 (28.6)	0.47 (11.9)	M6
60	CM60CF	HRCII-C	1.40 (35.6)	4.93 (125)	2.36 (60)	0.19 (4.75)	0.65 (16.4)	3.41 (86.5)	3.14 (79.8)	1.13 (28.6)	0.47 (11.9)	M8
100	CM100CF	HRCII-MISC	1.40 (35.6)	4.93 (125)	2.36 (60)	0.19 (4.75)	0.65 (16.4)	3.41 (86.5)	3.14 (79.8)	1.13 (28.6)	.47 (11.9)	M8

The only controlled copy of this Data Sheet is the electronic read-only version located on the Cooper Bussmann Network Drive. All other copies of this document are by definition uncontrolled. This bulletin is intended to clearly present comprehensive product data and provide technical information that will help the end user with design applications. Cooper Bussmann reserves the right, without notice, to change design or construction of any products and to discontinue or limit distribution of any products. Cooper Bussmann also reserves the right to change or update, without notice, any technical information contained in this bulletin. Once a product has been selected, it should be tested by the user in all possible applications.

© 2009 Cooper Bussmann
St. Louis, MO 63178
www.cooperbussmann.com

Общество с ограниченной ответственностью «МосЧип» ИНН 7719860671 / КПП 771901001
Адрес: 105318, г.Москва, ул.Щербаковская д.3, офис 1107

Данный компонент на территории Российской Федерации

Вы можете приобрести в компании MosChip.

Для оперативного оформления запроса Вам необходимо перейти по данной ссылке:

http://moschip.ru/get-element

Вы можете разместить у нас заказ для любого Вашего проекта, будь то серийное производство или разработка единичного прибора.

В нашем ассортименте представлены ведущие мировые производители активных и пассивных электронных компонентов.

Нашей специализацией является поставка электронной компонентной базы двойного назначения, продукции таких производителей как XILINX, Intel (ex.ALTERA), Vicor, Microchip, Texas Instruments, Analog Devices, Mini-Circuits, Amphenol, Glenair.

Сотрудничество с глобальными дистрибьюторами электронных компонентов, предоставляет возможность заказывать и получать с международных складов практически любой перечень компонентов в оптимальные для Вас сроки.

На всех этапах разработки и производства наши партнеры могут получить квалифицированную поддержку опытных инженеров.

Система менеджмента качества компании отвечает требованиям в соответствии с ГОСТ Р ИСО 9001, ГОСТ РВ 0015-002 и ЭС РД 009

Офис по работе с юридическими лицами:

105318, г.Москва, ул.Щербаковская д.3, офис 1107, 1118, ДЦ «Щербаковский»

Телефон: +7 495 668-12-70 (многоканальный)

Факс: +7 495 668-12-70 (доб.304)

E-mail: info@moschip.ru

Skype отдела продаж:
moschip.ru
moschip.ru_4
moschip.ru_6
moschip.ru_9