NOTES:

1. MATERIALS AND FINISHES:
   BODY & CONTACT - BRASS, GOLD PLATING
   INSULATOR - LCP E130i
   CAP - PTFE, NATURAL

2. ELECTRICAL:
   A. IMPEDANCE: 50 OHM
   B. FREQUENCY RANGE: DC - 18 GHz
   C. VSWR (RETURN LOSS): 1.10 MAX. (-26.4 dB MIN.) @ DC-6 GHz
   1.15 MAX. (-23.1 dB MIN.) @ 6-10 GHz
   1.30 MAX. (-17.7 dB MIN.) @ 10-18 GHz
   D. DIELECTRIC WITHSTANDING VOLTAGE: 500 VRMS, MIN.
   CONNECTOR ONLY, PERFORMANCE WILL VARY
   BASED ON BOARD LAYOUT

3. MECHANICAL:
   A. DURABILITY: 1000 CYCLES MIN.
   B. TEMPERATURE RANGE: -65°C TO +165°C
   C. ENGAGEMENT FORCE: 2 LBS (9 N) MAX.
   D. DISENGAGEMENT FORCE: 0.5 LBS (2.2 N) MIN.

4. PACKAGING:
   A. QUANTITY: TAPE & REEL PACKAGING, 1000 PCS/REEL
   B. MARKING: REEL TO BE MARKED:
   "AMPHENOL RF, SMP-MSCM-PCS11T, AND DATE CODE"

THIRD ANGLE PROJ.

REVISIONS

REV	DESCRIPTION	DATE	ECO	APPR
A	RELEASE TO MFG.	07-Jun-18	08221	BMG

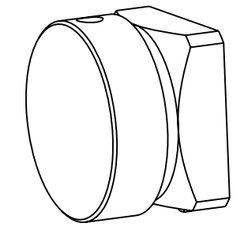

SCALE 5.000

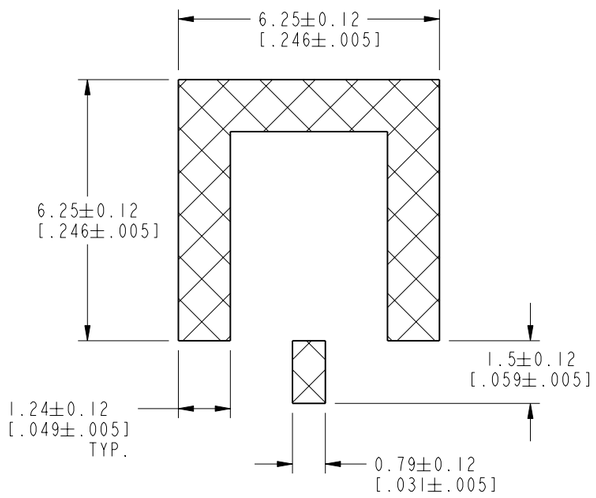

RECOMMENDED PCB LAYOUT DIMENSIONS

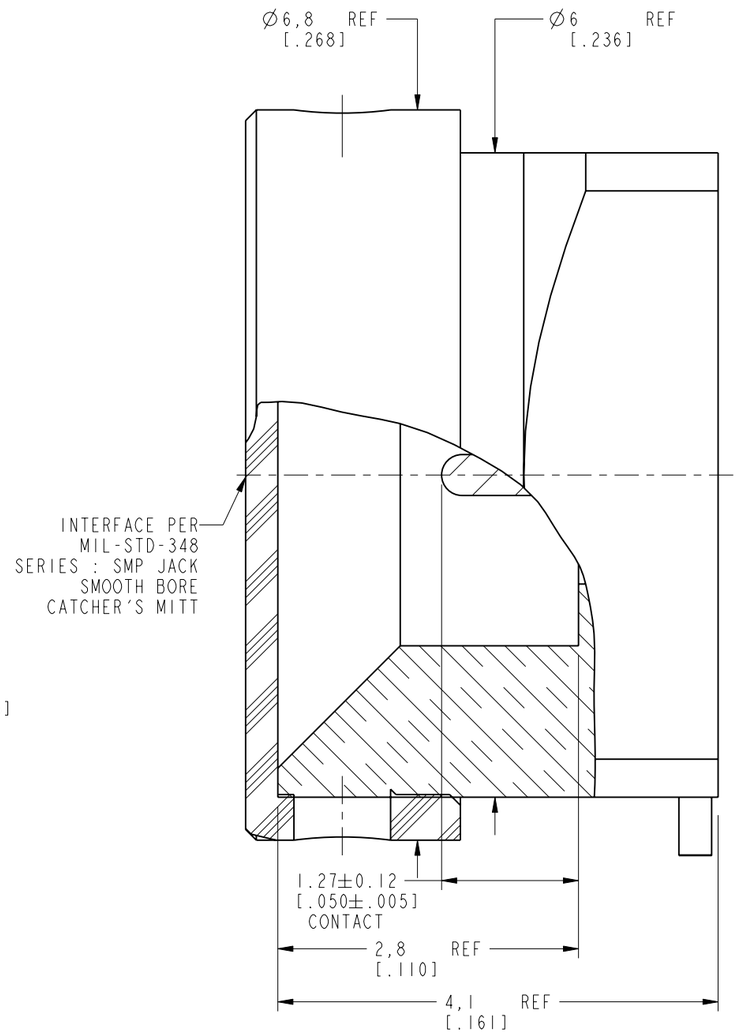

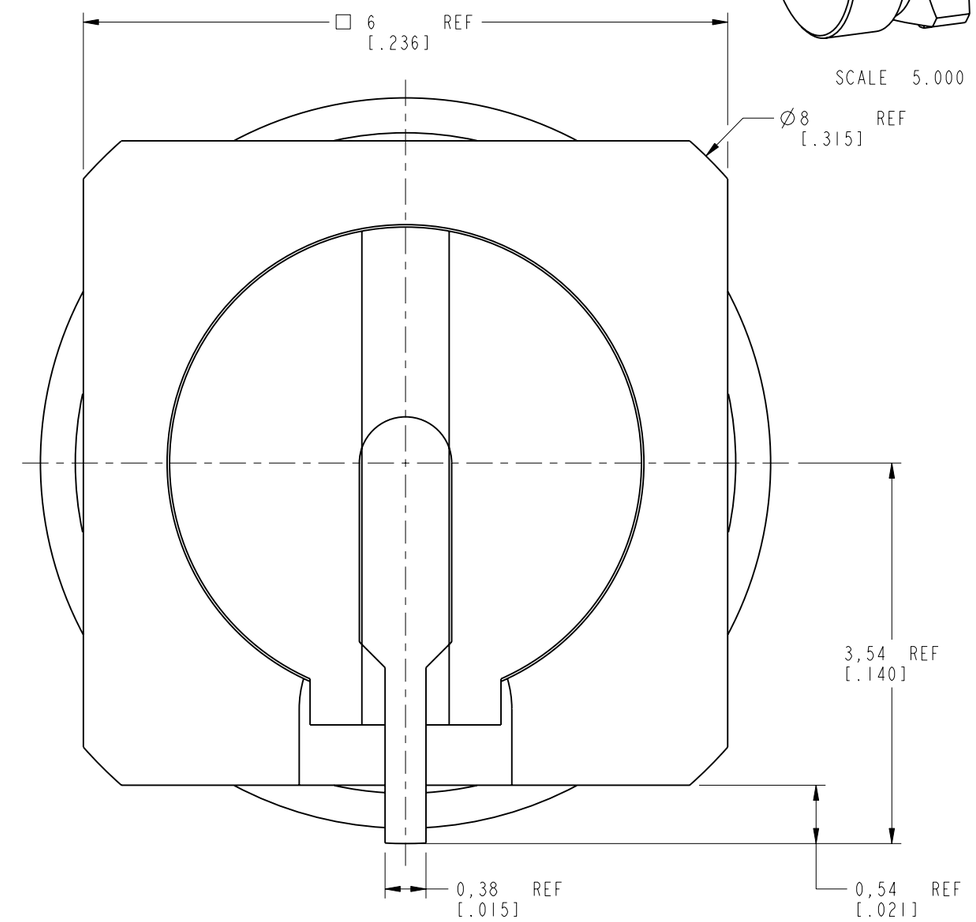

CUSTOMER OUTLINE DRAWING

ALL OTHER SHEETS ARE FOR INTERNAL USE ONLY

UNLESS OTHERWISE SPECIFIED, DIMENSIONS ARE IN METRIC AND TOLERANCES ARE:

<0.5mm	0.5 - 6mm	6 - 30mm	30 - 120mm	ANGLES
± 0.05mm	±0.1mm	±0.2mm	± 0.3mm	±1°

NOTICE - These drawings, specifications, or other data (1) are, and remain the property of Amphenol corp. (2) must be returned upon request; and (3) are confidential and not to be disclosed to any person other than those to whom they are given by Amphenol Corp. the furnishing of these drawings, specifications, or other data by Amphenol Corp., or to any other person to anyone for any purpose is not to be regarded by implication or otherwise in any manner licensing, granting rights to permitting such holder or any other person to manufacture, use or sell any product, process or design, patented or otherwise, that may in any way be related to or disclosed by said drawings, specifications, or other data.

MATERIAL
SEE NOTES

REFERENCE
EAR #8023 AND SMP-MSCM-PCS-10

CONFIGURATION LEVEL: In Work

FINISH

DRAWN STAR	DATE 12-Jun-18	
ENGINEER SUNDE	DATE 12-Jun-18	
APPROVED S.HSIEH	DATE 12-Jun-18	
CAD FILE		

TITLE
SMP STR JACK SMOOTH BORE CATCHER'S MITT SURFACE MOUNT

SCALE: 18.0:1.0 | SHEET 2 OF 3

DWG SIZE B | REV A

Amphenol RF
www.amphenolrf.com

DRAWING NO. SMP-MSCM-PCS11T
ITEM NO. SMP-MSCM-PCS11T
PART NO. SMP-MSCM-PCS11T

THIRD ANGLE PROJ.

REVISIONS				
REV	DESCRIPTION	DATE	ECO	APPR
A	RELEASE TO MFG.	07-Jun-18	08221	BMG

零件图

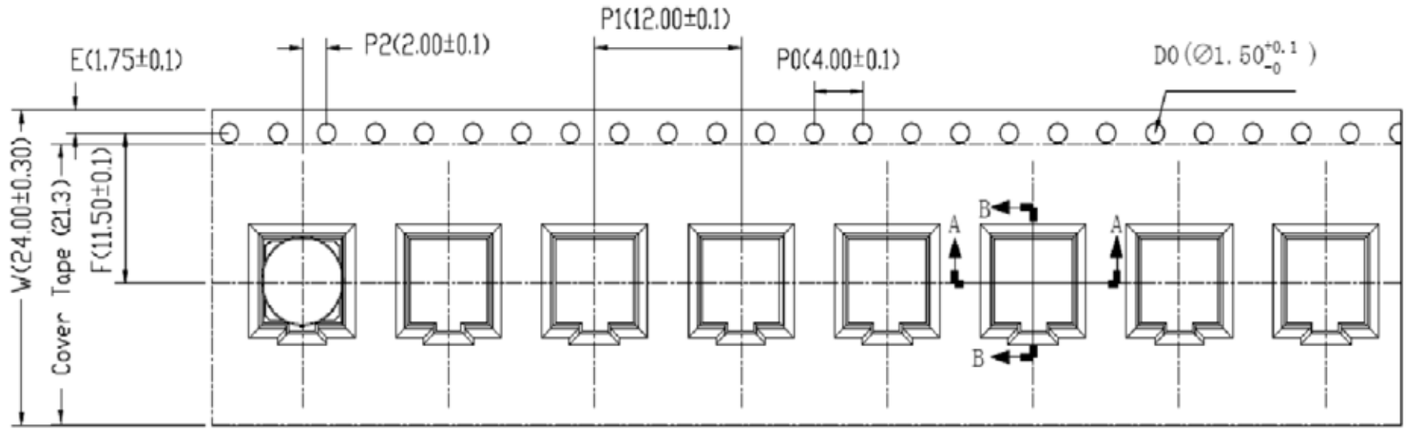

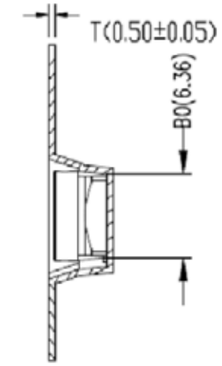

SECTION B-B

载带卷料方向

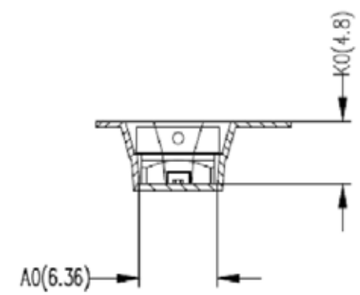

SECTION A-A

Notes:

1. 10 sprocket hole pitch cumulative tolerance ±0.20mm
   (每10个链轮齿孔径累计公差为±0.2MM)
2. Carrier camber not to exceed 1mm in 250mm.
   (传送料带弯曲变形度每250MM不超过1MM)
3. A_0 and B_0 measured on a plane 0.3mm above the bottom of the pocket. (A0与B0在同一平面测量且距口袋底部0.3MM)
4. K_0 measured from a plane on the inside bottom of the pocket to the top surface of the carrier.
   (K0为口袋底部与材料表面的平面距离。)
5. All dimensions meet EIA-481-D requirements.
   (所有尺寸符合EIA-481-D标准要求。)
6. Material: Black Antistatic polystyrene .
   (材料:黑色抗静电聚苯乙烯。)
7. Thickness: 0.50 ±0.05 mm.
   (厚度:0.50±0.05毫米。)
8. Packing length per 13" reel : 12.96Meters.
   (每个13"卷轴包装长度为12.96米。)
9. Component loader per 13" reel :1000 pcs.
   (每个13"卷轴可装1000个零件。)

注:未注公差为±0.10

NOTE: ALL TOLERANCES ARE: ±0.10, EXCEPT WHERE NOTED

ITEM	W	A_0	B_0	K_0	K_1	P_1	F	E	D_0	D_1	P_0	P_2	T
DIM	24±0.3	6.36±0.1	6.36±0.1	4.8±0.1		12.0±0.1	11.5±0.1	1.75±0.1	$1.5^{+0.1}_{-0.0}$		4.0±0.1	2.0±0.1	0.5±0.05

UNLESS OTHERWISE SPECIFIED, DIMENSIONS ARE IN METRIC AND TOLERANCES ARE:

<0.5mm	0.5 - 6mm	6 - 30mm	30 - 120mm	ANGLES
± 0.05mm	±0.1mm	±0.2mm	± 0.3mm	±1°

NOTICE - These drawings, specifications, or other data (1) are, and remain the property of Amphenol corp. (2) must be returned upon request; and (3) are confidential and not to be disclosed to any person other than those to whom they are given by Amphenol Corp. the furnishing of these drawings, specifications, or other data by Amphenol Corp., or to any other person to anyone for any purpose is not to be regarded by implication or otherwise in any manner licensing, granting rights to permitting such holder or any other person to manufacture, use or sell any product, process or design, patented or otherwise, that may in any way be related to or disclosed by said drawings, specifications, or other data.

MATERIAL
SEE NOTES

REFERENCE
EAR #8023 AND SMP-MSCM-PCS-10

CONFIGURATION LEVEL: In Work

FINISH

DRAWN STAR	DATE 12-Jun-18	
ENGINEER SUNDE	DATE 12-Jun-18	
APPROVED S.HSIEH	DATE 12-Jun-18	
CAD FILE		

TITLE
SMP STR JACK SMOOTH BORE CATCHER'S MITT SURFACE MOUNT

SCALE: 19.0:1.0 SHEET 3 OF 3

DWG SIZE B REV A

Amphenol RF
www.amphenolrf.com

DRAWING NO. SMP-MSCM-PCSIIT
ITEM NO. SMP-MSCM-PCSIIT
PART NO. SMP-MSCM-PCSIIT

Общество с ограниченной ответственностью «МосЧип» ИНН 7719860671 / КПП 771901001
Адрес: 105318, г.Москва, ул.Щербаковская д.3, офис 1107

Данный компонент на территории Российской Федерации

Вы можете приобрести в компании MosChip.

Для оперативного оформления запроса Вам необходимо перейти по данной ссылке:

http://moschip.ru/get-element

Вы можете разместить у нас заказ для любого Вашего проекта, будь то серийное производство или разработка единичного прибора.

В нашем ассортименте представлены ведущие мировые производители активных и пассивных электронных компонентов.

Нашей специализацией является поставка электронной компонентной базы двойного назначения, продукции таких производителей как XILINX, Intel (ex.ALTERA), Vicor, Microchip, Texas Instruments, Analog Devices, Mini-Circuits, Amphenol, Glenair.

Сотрудничество с глобальными дистрибьюторами электронных компонентов, предоставляет возможность заказывать и получать с международных складов практически любой перечень компонентов в оптимальные для Вас сроки.

На всех этапах разработки и производства наши партнеры могут получить квалифицированную поддержку опытных инженеров.

Система менеджмента качества компании отвечает требованиям в соответствии с ГОСТ Р ИСО 9001, ГОСТ РВ 0015-002 и ЭС РД 009

Офис по работе с юридическими лицами:

105318, г.Москва, ул.Щербаковская д.3, офис 1107, 1118, ДЦ «Щербаковский»

Телефон: +7 495 668-12-70 (многоканальный)

Факс: +7 495 668-12-70 (доб.304)

E-mail: info@moschip.ru

Skype отдела продаж:
moschip.ru
moschip.ru_4
moschip.ru_6
moschip.ru_9