Panasonic

PIR Motion Sensor

(((PaPIRs)))

Special Designs from Panasonic that Provide High Sensitivity and Reliability

Motion Sensor

2016.1

PIR Motion sensors (Passive Infrared or Pyroelectric) from Panasonic for optimal usability and reliability

Panasonic develops and produces PIR Motion sensors, which combine easy integration, high reliability and environment-friendly materials.
The Panasonic PIR Motion sensors abbreviated as PaPIRs, has three series of products, including

- EKMB(WL) with low current consumption
- EKMC(VZ) for general use
- AMN(NaPiOn), the traditional type. Various lenses, digital and analog types are available:

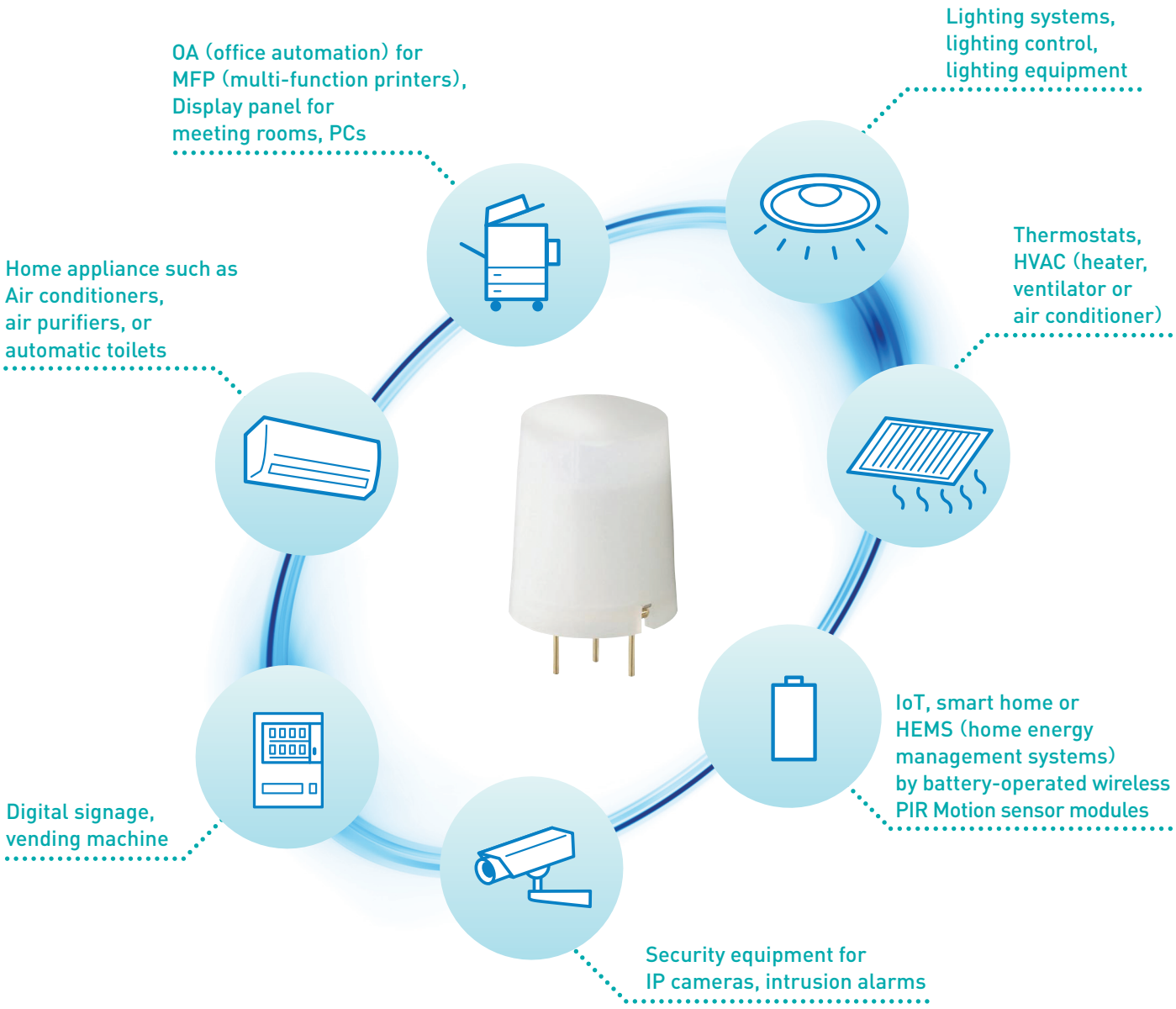

Unique design to satisfy market demand

The PIR Motion sensors from Panasonic offer crucial advantages over conventional PIR Motion sensors.
The unique design concept (explained below) ranges from the production of the pyroelectric sensing devices to the internal signal processing, thus guaranteeing an optimal detection capability and high reliability.

Easy design-in, save design costs by excellent radiation noise resistance

The integrated amplifier /comparator circuit inside a TO-5 metal can (digital type) prevent interferences caused by electromagnetic fields, such as those generated by cell phones and wireless devices. A special differential circuit design is introduced for the EKMB 6μA type for applications where a high noise resistance is required (up to GHz range).

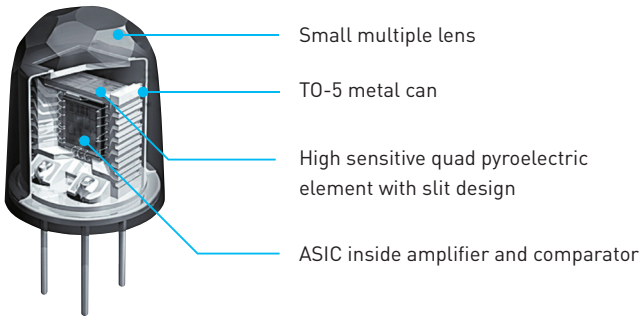

Small and fancy lens design

A smaller lens size can be used thanks to the special design of the small pyroelectric elements.

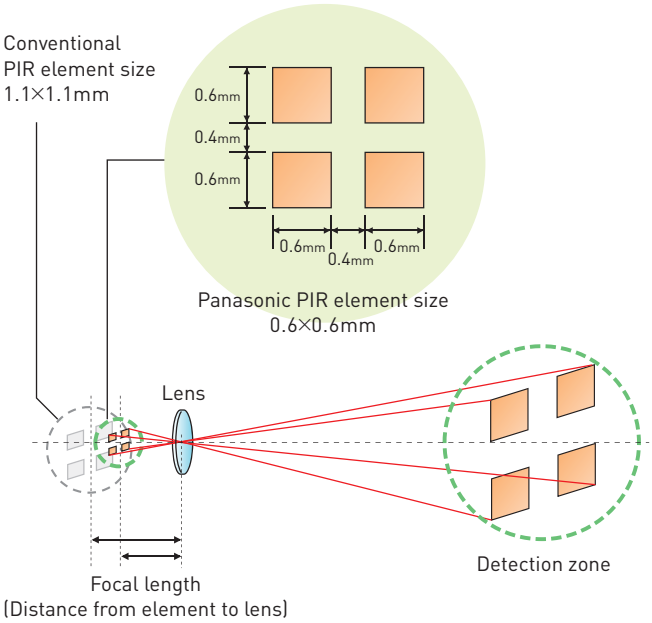

Better sensitivity (approx. 2 times better)

The sensitivity has been significantly improved thanks to a unique slit design of the pyroelectric elements. The separated sensing areas prevent thermal crosstalk between the single sensing elements. Therefore, reliable detection is possible even if the temperature difference between the background (e.g. floor /wall) and the target object (human) is small. (e.g.△T=4degC)

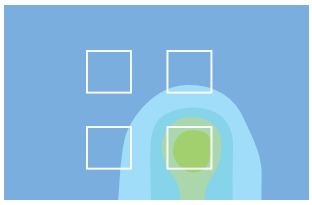

Temperature distribution of conventional pyroelectric sensors without slit

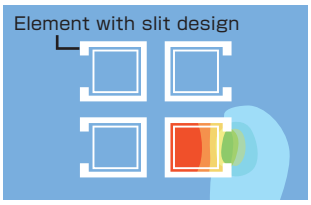

Temperature distribution of Panasonic's pyroelectric infrared sensor for detection of humans

Better signal-to-noise ratio (min.4 times better)

Improved signal-to-noise ratio thanks to a special I/V circuit which is used for converting a current signal from the pyroelectric element to voltage. Panasonic PIR Motion sensors perform by the feedback capacitor and the operational amplifier, different from the conventional FET-type, thereby decreasing the probability of false alarms due to temperature fluctuation.

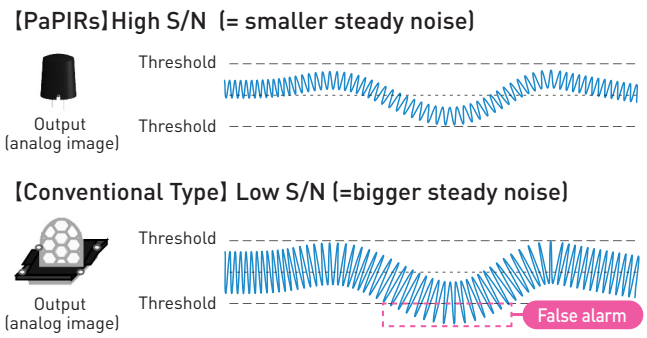

Lead-free pyroelectric element

A ferroelectric LiTaO3 single lead-free crystal is used as the pyroelectric element for Panasonic PIR Motion sensors. Conventional PIR Motion sensors normally use a ceramic base material (e.g. PZT) for the pyroelectric element, which contains lead in many cases.

Low current consumption 〈 EKMB(WL) series only 〉

Reduction of current consumption (1, 2 or 6μA) thanks to the special circuit design technology allows battery life to be extended for battery-driven products including wireless devices etc.

Extensive line-up to satisfy a variety of applications

Please choose based on your application and/or environmental requirement

(((PaPIRs))) motion sensor

EKMB(WL)series

○Low current consumption for battery-driven applications
○A special differential input circuit design is introduced for the EKMB 6μA type for applications where a high noise resistance is required (up to GHz range)

Choose by the lens

Lenses for the EKMB/ EKMC series

Standard detection type

Long distance detection type

Wall installation type

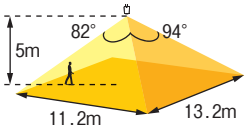

Standard detection type

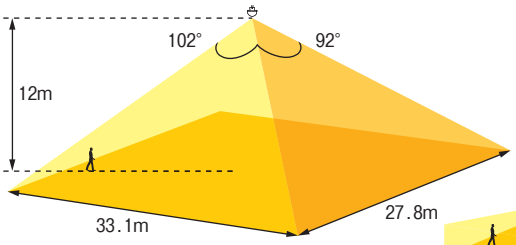

Long distance detection type

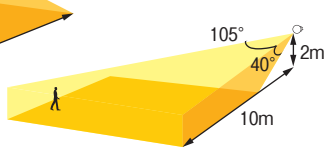

Wall installation type

	Standard detection type			Long distance detection type			Wall installation type		
Choose by the current consumption in standby mode (1μA type : in sleep mode)	1μA	2μA	6μA	1μA	2μA	6μA	1μA	2μA	6μA
Choose by output	Digital								
Choose by lens color: White	EKMB1101111	EKMB1201111	EKMB1301111K	EKMB1103111	EKMB1203111	EKMB1303111K	EKMB1104111	EKMB1204111	EKMB1304111K
Choose by lens color: Black	EKMB1101112	EKMB1201112	EKMB1301112K	EKMB1103112	EKMB1203112	EKMB1303112K	EKMB1104112	EKMB1204112	EKMB1304112K
Choose by lens color: Pearl white	EKMB1101113	EKMB1201113	EKMB1301113K	EKMB1103113	EKMB1203113	EKMB1303113K	EKMB1104113	EKMB1204113	EKMB1304113K
Reference page	P.5								

and/or environmental requirements

EKMC (VZ) series

○Economy type suitable for a wide range of applications

AMN (NaPiOn) series

○Line-up with special detection lenses for slight motion or narrow spot detection
○Digital and analog output types available

Lensless type available

The EKMB/EKMC series also offers a lensless type for those customers who design their own lens.

EKMB series

1μA type: EKMB1100100
2μA type: EKMB1200100
6μA type: EKMB1300100K

EKMC series

170μA type: EKMC1600100

Lenses for the AMN series

Standard detection type

Slight motion detection type

Spot detection type

10m detection type

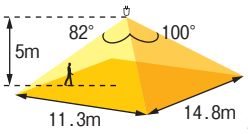

Standard detection type

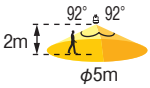

Slight motion detection type

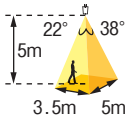

Spot detection type

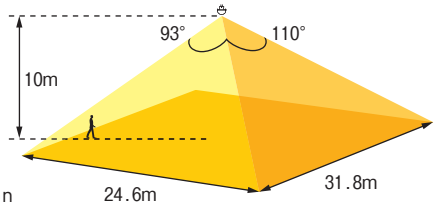

10m detection type

Standard detection type

Long distance detection type

Wall installation type

Standard detection type

Slight motion detection type

Spot detection type

10m detection type

170μA			170μA							
Digital			Digital	Analog	Digital	Analog	Digital	Analog	Digital	Analog
EKMC1601111	EKMC1603111	EKMC1604111	AMN31112	AMN21112	AMN32112	AMN22112	AMN33112	AMN23112	AMN34112	AMN24112
EKMC1601112	EKMC1603112	EKMC1604112	AMN31111	AMN21111	AMN32111	AMN22111	AMN33111	AMN23111	AMN34111	AMN24111
EKMC1601113	EKMC1603113	EKMC1604113								

P.7

P.9

※Please contact the sales department when you require an AMN series lens with low current consumption (1,2 or 6μA).
※New lenses are under development, please contact the sales department when you have special lens requirements.

EKMB (WL) series

Current consumption 1/2/6μA | Digital output

Standard detection type

Long distance detection type

Wall installation type

○Low current consumption for battery-driven applications
○A special differential input circuit design (EKMB 6μA type only) for applications where a high noise resistance is required (up to GHz range).

Recommended applications

IoT, occupancy sensor module for smart home, battery-driven applications, wireless devices

Lensless type available

1μA type: EKMB1100100 6μA type: EKMB1300100K
2μA type: EKMB1200100

Specifications

Detection performance	Model no.	Current consumption	Lens color	Output type	Detection distance	Detection area		Detection zones
						Horizontal	Vertical	
Standard detection type	EKMB1101111	1μA	White	Digital	5m	94°	82°	64
	EKMB1101112		Black					
	EKMB1101113		Pearl white					
	EKMB1201111	2μA	White					
	EKMB1201112		Black					
	EKMB1201113		Pearl white					
	EKMB1301111K	6μA	White					
	EKMB1301112K		Black					
	EKMB1301113K		Pearl white					
Long distance detection type	EKMB1103111	1μA	White		12m	102°	92°	92
	EKMB1103112		Black					
	EKMB1103113		Pearl white					
	EKMB1203111	2μA	White					
	EKMB1203112		Black					
	EKMB1203113		Pearl white					
	EKMB1303111K	6μA	White					
	EKMB1303112K		Black					
	EKMB1303113K		Pearl white					
Wall installation type	EKMB1104111	1μA	White		12m (1st step lens) 6m (2nd step lens) 3m (3rd step lens) Please refer to page 8 for details.	40°	105°	68
	EKMB1104112		Black					
	EKMB1104113		Pearl white					
	EKMB1204111	2μA	White					
	EKMB1204112		Black					
	EKMB1204113		Pearl white					
	EKMB1304111K	6μA	White					
	EKMB1304112K		Black					
	EKMB1304113K		Pearl white					

■Ordering information

EKMB1□□□1□□□

- ●PaPIRs motion sensor
- ●Current consumption in standby mode
  1: 1μA / 2: 2μA / 3: 6μA
- ●Detection (Lens)
  00: Lensless / 01: 5m distance standard / 03: 12m long distance / 04: Wall installation type
- ●Others
  K: 6μA / Blank: Other than 6μA
- ●Lens color
  0: Lensless / 1: White / 2: Black / 3: Pearl white
- ●Lens
  0: Lensless / 1: with lens

Characteristics

■Maximum rated values

Items	Value
Power supply voltage	-0.3 to 4.5V
Ambient temperature	-20 to +60℃ (No frost, no condensation)
Storage temperature	-20 to +70℃

■Electrical Characteristics

Items		Symbol	1μA type	2μA type	6μA type	Conditions
Operating voltage	Max	Vdd	4.0V			—
	Min		2.3V			
Current consumption (in standby mode) Note 1)	Ave	Iw	1μA	2μA	6μA	Ambient temperature: 25℃ Iout=0 Vdd: 3V
Output current (during detection period) Note 2)	Max	Iout	100μA			Ambient temperature: 25℃ Vout≧Vdd-0.5
Output voltage (during detection period)	Min	Vout	Vdd-0.5V			Ambient temperature: 25℃ Open at no detection
Circuit stability time (when voltage is applied)	Ave	Twu	25 sec		—	Ambient temperature: 25℃ Iout=0 Vdd: 3V
	Max		210 sec		10 sec, Note 3)	

Note 1) The total current consumption is equal to the current consumption in standby mode (Iw) plus the output current during detection (Iout). For the 1μA type please note that the average current consumption is 1μA in sleep mode and 1.9μA in standby mode. Please also refer to the timing chart.
Note 2) Please select an output resistors (pull-down concept) in accordance with Vout so that the output current is lower than or equal to 100μA. If the output current is more than 100μA, this may cause false alarms.
Note 3) The sensor temperature has to be constant for the time specified.

Timing chart

■2μA／6μA type

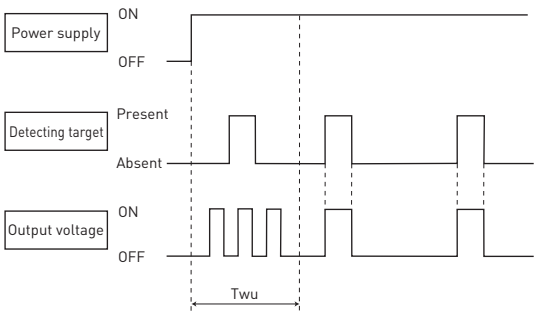

【Explanation of the timing】
Twu: Circuit stability time: about 25 sec (typ.) for 2μA type, max. 10 sec for 6μA type. While the circuitry is stabilizing after the power is turned on, the sensor output is not fixed in the ON or OFF state. This is true regardless of whether or not the sensor has detected anything.

■1μA type

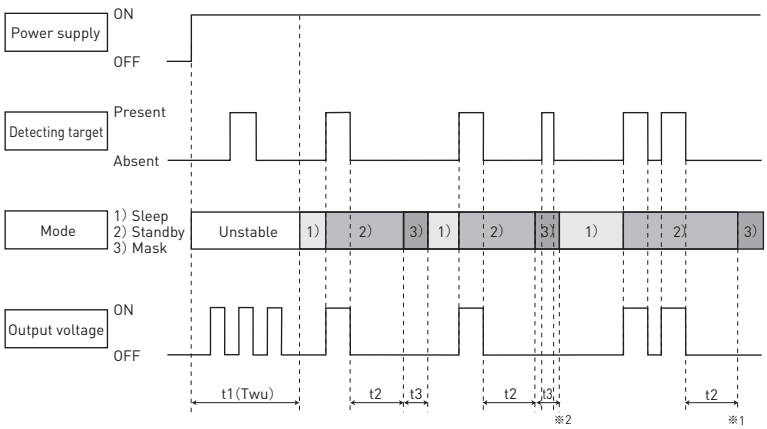

【Explanation of modes】
1) Sleep mode: When the output is OFF. The electrical current consumption is around 1μA.
2) Standby mode: After the sensor's output has reached ON status, the sensor switches to standby mode. The electrical current consumption gets close to 1.9μA . When the sensor's output returns to its OFF value after the "hold time" has expired, the sensor switches again to sleep mode.
3) Mask mode: Time during which the output is forced to OFF status after the end of the standby mode. (No detection is possible during this period.)

【Explanation of the timing】
t1 (Twu): Circuit stability time: about 25 sec (typ.)
While the circuitry is stabilizing after the power is turned on, the sensor output is not fixed in the ON or OFF state. This is true regardless of whether or not the sensor has detected anything.
t2: Standby hold time: about 2.6 sec (typ.) after the last detection of a signal. (※1)
t3: Mask time: about 1.3 sec (typ.) During this stage, even if the sensor detects something, the output will not switch to ON. (※2)

EKMC(VZ)series

Current consumption 170μA | Digital output

Standard detection type

Long distance detection type

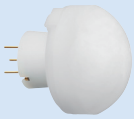

Wall installation type

○Economy type suitable for a wide range of applications

Recommended applications

Lighting control, lighting equipment, heaters, ventilators or air conditioners, security equipment for IP cameras, intrusion alarms, digital signage, vending machines, multi-function printers, display panels for meeting rooms, PCs

Lensless type available
170μA type: EKMC1600100

Specifications

Detection performance	Model no.	Current consumption	Lens color	Output type	Detection distance	Detection area		Detection zones
						Horizontal	Vertical	
Standard detection type	EKMC1601111	170μA	White	Digital	5m	94°	82°	64
	EKMC1601112		Black					
	EKMC1601113		Pearl white					
Long distance detection type	EKMC1603111		White		12m	102°	92°	92
	EKMC1603112		Black					
	EKMC1603113		Pearl white					
Wall installation type	EKMC1604111		White		12m (1st step lens) 6m (2nd step lens) 3m (3rd step lens)	40°	105°	68
	EKMC1604112		Black					
	EKMC1604113		Pearl white					

■Ordering information

EKMC16□□1□□

- ●PaPIRs motion sensor
- ●Detection(Lens)
  00: Lensless / 01: 5m distance standard /
  03: 12m long distance / 04: Wall installation type
- ●Lens color
  0: Lensless / 1: White /
  2: Black / 3: Pearl white
- ●Lens
  0: Lensless / 1: with lens

Characteristics

■Maximum rated values

Items	Value
Power supply voltage	-0.3 to 7V
Ambient temperature	-20 to +60℃ (no frost, no condensation)
Storage temperature	-20 to +70℃

■Electrical characteristics

Items		Symbol	EKMC (VZ) type	Conditions
Operating voltage	Max	Vdd	6.0V	—
	Min		3.0V	
Current consumption (in standby mode) Note 1)	Ave	Iw	170μA	Ambient temperature: 25℃ Iout=0 Vdd: 5V
Output current (during detection) Note 2)	Max	Iout	100μA	Ambient temperature: 25℃ Vout≧Vdd-0.5
Output voltage (during detection period)	Min	Vout	Vdd-0.5V	Ambient temperature: 25℃ Open at no detection
Circuit stability time (when voltage is applied)	Max	Twu	30 sec	Ambient temperature: 25℃ Iout=0 Vdd: 5V

Note 1) Current consumption during detection period is the total value of current consumption in standby mode add to output current.
Note 2) Please select an output resistors (pull-down concept) in accordance with Vout so that the output current is lower than or equal to 100μA. If the output current is more than 100μA, this may cause false alarms.

Timing chart

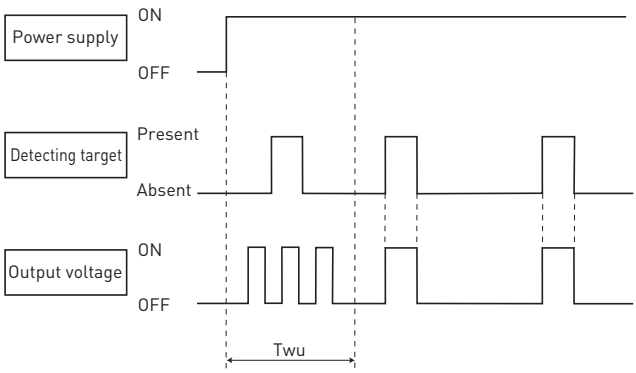

【Explanation of the timing】
Twu: Circuit stability time: max. 30 sec
During this stage, the output's status is undefined (ON/OFF) and detection is therefore not guaranteed.

Lenses for the EKMB/EKMC series

	Dimension (mm)	Detection zone	Detection characteristics

Standard detection type

CAD data

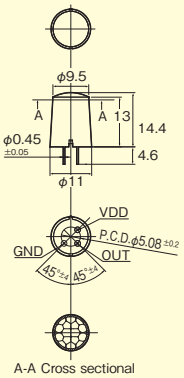

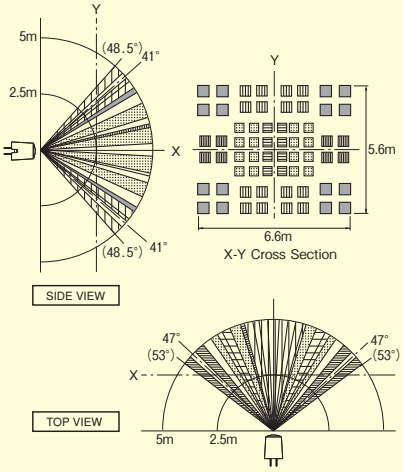

Detection distance	Max. 5m
Field of view	94°×82°
Detection zone	64 beams
Detection condition	·The temperature difference between the target and the surroundings must be higher than 4℃. ·Movement speed: 1.0m/s ·Target concept: Human body with an approx. size of 700×250mm ·Target moving direction: Crossing the detection beam.

Long distance detection type

CAD data

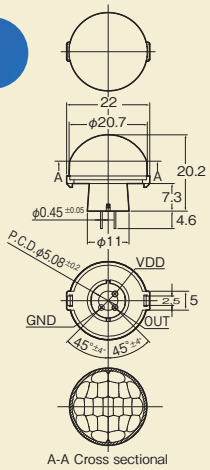

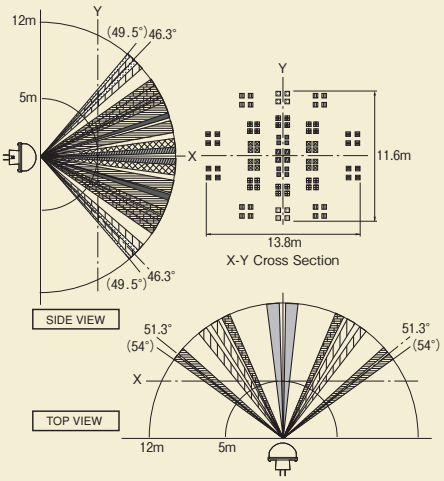

Detection distance	Max. 12m
Field of view	102°×92°
Detection zone	92 beams
Detection condition	·The temperature difference between the target and the surroundings must be higher than 4℃. ·Movement speed: 1.0m/s ·Target concept: Human body with an approx. size of 700×250mm ·Target moving direction: Crossing the detection beam.

Wall installation type

CAD data

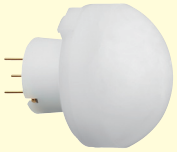

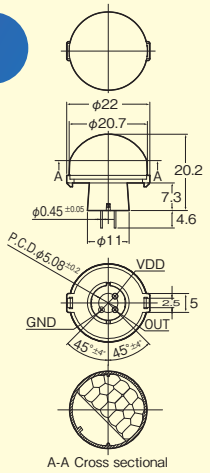

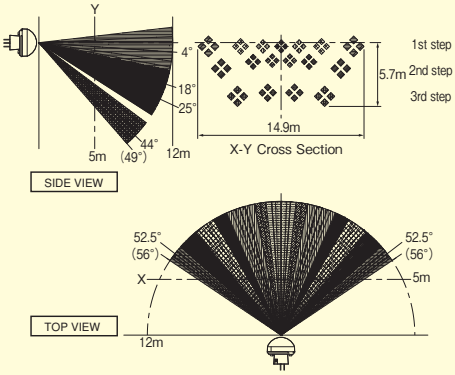

Detection distance	1st step lens	Max. 12m
	2nd step lens	Max. 6m
	3rd step lens	Max. 3m
Field of view	40°×105°	
Detection zone	68 beams	
Detection condition	·The temperature difference between the target and the surroundings must be higher than 4℃. ·Movement speed: 1.0m/s ·Target concept: Human body with an approx. size of 700×250mm ·Target moving direction: Crossing the detection beam.	

Lensless type

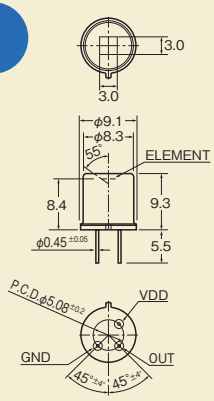

■PIR element

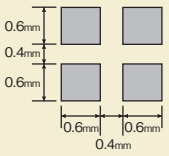

Detection sensitivity	Average: 5.6μW/cm²
	Maximum: 7.6μW/cm²

※Detection sensitivity is measured by following system

■Test setup

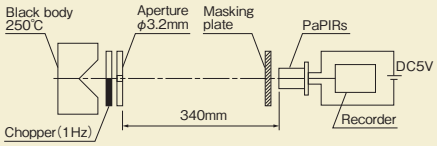

CAD data CAD data can be downloaded from the PaPIRs WEB site. Panasonic PaPIRs Search

Please refer to the formal specification for the dimension, and the tolerance ※Please note that the horizontal and vertical field of view depends on the position of the metal tab on which the lens is mounted.

AMN (NaPiOn) series

Current consumption 170μA | Digital/Analog output

Standard detection type

Slight motion detection type

Spot detection type

10m detection type

○Line-up with special detection lenses for slight motion or narrow spot detection
○Digital and analog output types

Recommended applications

Lighting control, lighting equipment, heaters, ventilators or air conditioners, security equipment for IP cameras, intrusion alarms, digital signage, vending machines, multi-function printers, display panels for meeting rooms, PCs

Specifications

Detection performance	Model no.	Current consumption	Lens color	Output type	Detection distance	Detection area		Detection zones
						Horizontal	Vertical	
Standard detection type	AMN31112	170μA	White	Digital	5m	100°	82°	64
	AMN31111		Black					
	AMN21112		White	Analog				
	AMN21111		Black					
Slight motion detection type	AMN32112		White	Digital	2m	92°	92°	104
	AMN32111		Black					
	AMN22112		White	Analog				
	AMN22111		Black					
Spot detection type	AMN33112		White	Digital	5m	22°	38°	24
	AMN33111		Black					
	AMN23112		White	Analog				
	AMN23111		Black					
10m detection type	AMN34112		White	Digital	10m	110°	93°	80
	AMN34111		Black					
	AMN24112		White	Analog				
	AMN24111		Black					

■Ordering information

AMN □□11□

●NaPiOn sensor

●Output type
2:Analog output／3:Digital output(170μA)

●Lens color
1: Black / 2: White

●Detection(Lens)
1:Standard type／2:Slight motion type／
3:Spot type／4:10m type

Characteristics

■Maximum rated values

Items	Value
Power Supply voltage	-0.3 to 7V
Ambient temperature	-20 to +60℃ (No frost, no condensation)
Storage temperature	-20 to +70℃

■Electrical characteristics (digital output)

Items		Symbol	Digital output	Conditions
Operating voltage	Max	Vdd	6.0V	—
	Min		3.0V	
Current consumption (in standby mode) Note1)	Ave	Iw	170μA	Ambient temperature: 25℃ Iout=0 Vdd: 5V
Output current (during detection Note2)	Max	Iout	100μA	Ambient temperature: 25℃ Vout≧Vdd-0.5
Output voltage (during detection period)	Min	Vout	Vdd-0.5V	Ambient temperature: 25℃ Open at no detection
Circuit stability time (when voltage is applied)	Max	Twu	30 sec	Ambient temperature: 25℃ Iout=0 Vdd: 5V

Note 1) The total current consumption is equal to the current consumption in standby mode (Iw) plus the output current during detection (Iout).
Note 2) Please select an output resistor (pull-down concept) in accordance with Vout so that the output current is lower than or equal to 100μA. If the output current is more than 100μA, this may cause false alarms.

■Electrical characteristics (analog output)

Items		Symbol	Analog output	Conditions
Operating voltage	Max	Vdd	5.5V	—
	Min		4.5V	
Current consumption (in standby mode) Note1)	Ave	Iw	170μA	Ambient temperature: 25℃ Iout=0 Vdd: 5V
Output current (during detection period) Note2)	Max	Iout	50μA	Ambient temperature: 25℃ Vdd: 5V
Output voltage range (during detection period)	Max	Vout	Vdd	Ambient temperature: 25℃ Vdd: 5V
	Min		0V	
Output off set voltage (at non detection)	Max	Voff	2.7V	Ambient temperature: 25℃ Vdd: 5V Steady output voltage at non detection
	Ave		2.5V	
	Min		2.3V	
Steady noise	Max	Vn	300mVpp	Ambient temperature: 25℃ Vdd: 5V
	Ave		155mVpp	
Detection sensitivity	Min	Vh or Vl	0.45V	Ambient temperature: 25℃ Vdd: 5V
Circuit stability time (when voltage is applied)	Max	Twu	45 sec	Ambient temperature: 25℃ Vdd: 5V

Note 1) The total current consumption is equal to the current consumption in standby mode (Iw) plus the output current during detection (Iout).
Note 2) To set the same detection sensitive as for the digital output type, set the output voltage to 2.5V ±0.45V

Timing chart

■Digital output

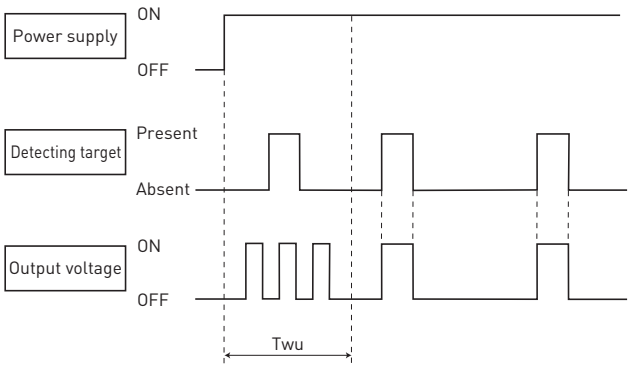

【Time axis explanation】
Twu: Circuit stability time: max. 30 sec
While the circuitry is stabilizing after the power is turned on, the sensor output is not fixed in the ON or OFF state. This is true regardless of whether or not the sensor has detected anything.

■Analog output

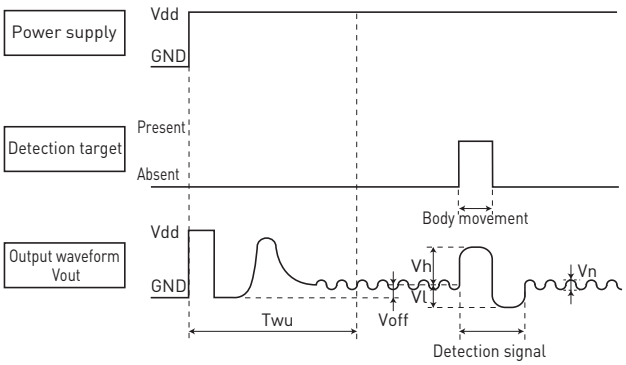

【Time axis explanation】
Twu: Circuit stability time: max. 45 sec
While the circuitry is stabilizing after the power is turned on, the sensor output is not fixed in the ON or OFF state. This is true regardless of whether or not the sensor has detected anything.

Lenses for the AMN series

	Dimension (mm)	Detection zone	Detection characteristics

Standard detection type

CAD data

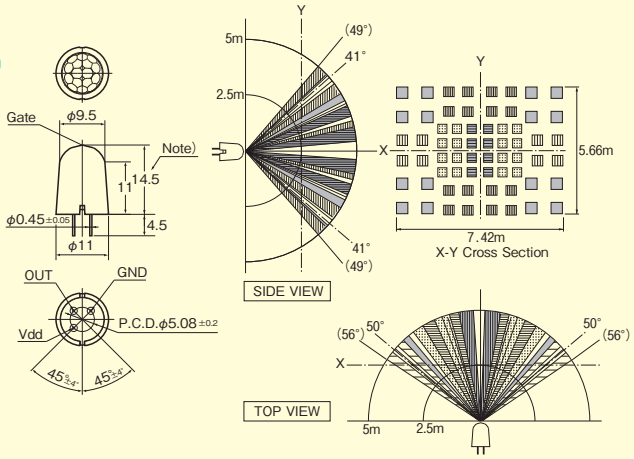

Detection distance	5m
Field of view	100°×82°
Detection zone	64 beams
Detection condition	·The temperature difference between the target and the surroundings must be higher than 4℃. ·Movement speed: Digital output 0.8 to 1.2m/s Analog output 0.5 to 1.5m/s ·Target concept: Human body with an approx. size of 700×250mm ·Target moving direction: Crossing the detection beam.

Slight motion detection type

CAD data

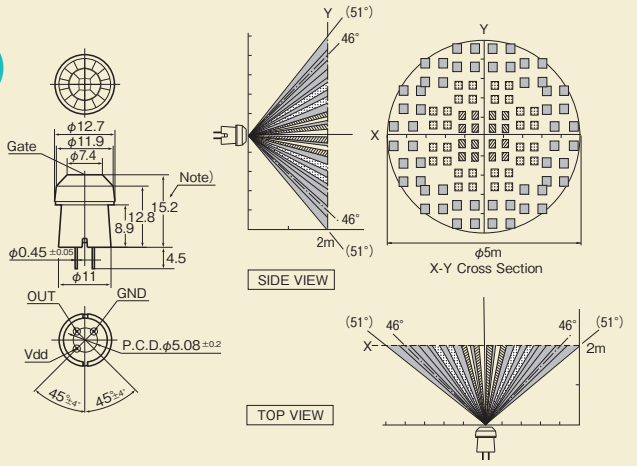

Detection distance	2m
Field of view	92°×92°
Detection zone	104 beams
Detection condition	·The temperature difference between the target and the surroundings must be higher than 4℃. ·Movement speed: Digital output 0.5m/s Analog output 0.3 to 1.0m/s ·Target concept: Human body with an approx. size of 200×200mm ·Target moving direction: Crossing the detection beam.

Spot detection type

CAD data

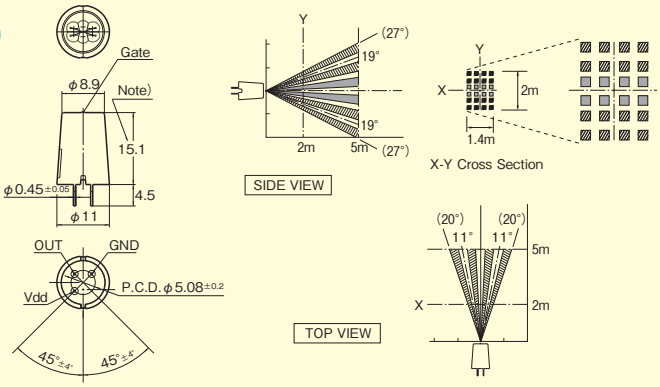

Detection distance	5m
Field of view	22°×38°
Detection zone	24 beams
Detection condition	·The temperature difference between the target and the surroundings must be higher than 4℃. ·Movement speed: Digital output 0.8 to 1.2m/s Analog output 0.5 to 1.5m/s ·Target concept: Human body with an approx. size of 700×250mm ·Target moving direction: Crossing the detection beam.

10m detection type

CAD data

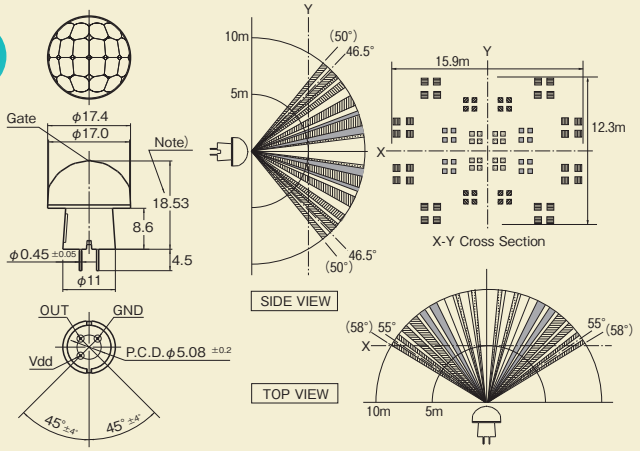

Detection distance	10m
Field of view	110°×93°
Detection zone	80 beams
Detection condition	·The temperature difference between the target and the surroundings must be higher than 4℃. ·Movement speed: Digital output 0.8 to 1.2m/s Analog output 0.5 to 1.5m/s ·Target concept: Human body with an approx. size of 700×250mm ·Target moving direction: Crossing the detection beam.

CAD data CAD data can be downloaded from the ((PaPIRs)) PaPIRs WEB site. Panasonic PaPIRs Search

Please refer to the formal specification for the dimension, and the tolerance ※Please note that the horizontal and vertical field of view depends on the position of the metal tab on which the lens is mounted.

■ Block diagram output circuit

1) Digital output

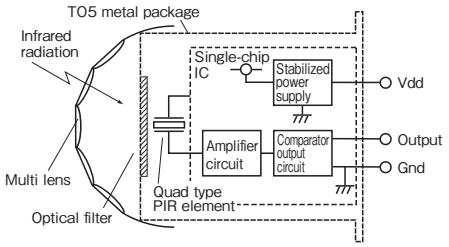

2) Analog output

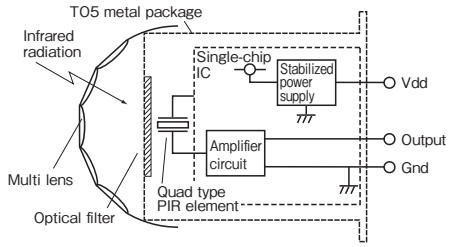

■ Wiring diagram

1) Digital output

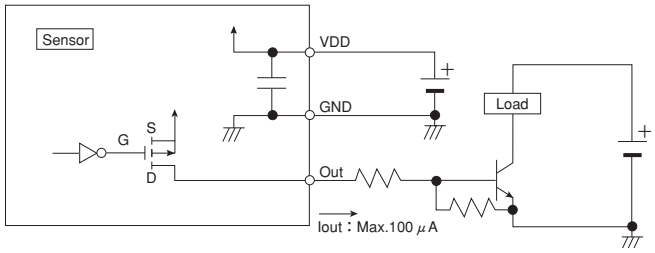

2) Analog output

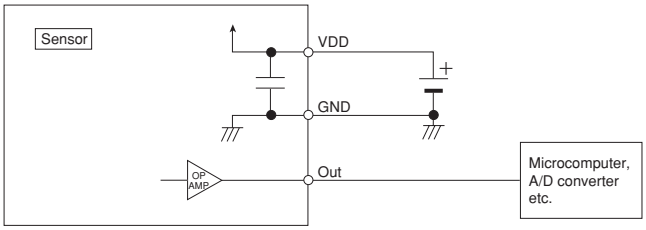

Vdd: Input power source (DC), GND: GND, Out: Output (Comparator)

Note) The output signal for the digital output type is from inside FET drain, therefore pull-down resistors are necessary. Please select an output resistor (pull-down concept) in accordance with Vout so that the output current is lower than or equal to 100μA. Use 50KΩ or more as a guide line. If the output current is more than 100μA, this may cause false alarms.

■ Timer circuit example

1) Digital output

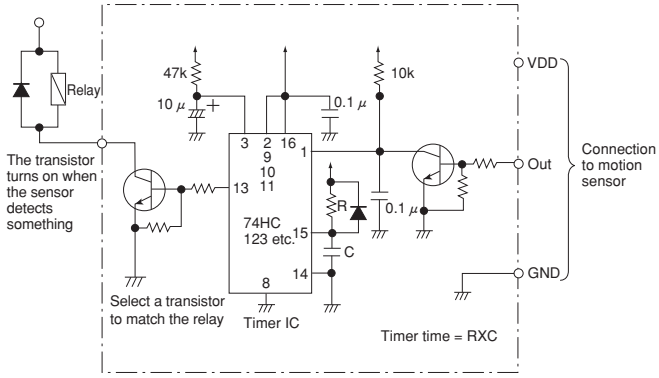

2) Analog output

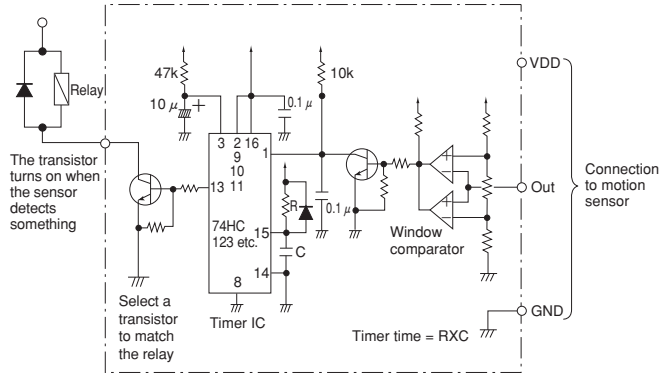

Note) This is the reference circuit which drives the PIR motion sensor. Install a noise filter for applications requiring enhanced detection reliability and noise withstanding capability. Differences in the specifications of electronic components to which the units are connected sometimes affect their correct operation; please check the units' performance and reliability for each application. Panasonic Corporation, Ltd. accepts no responsibility for damages resulting from the use of this circuit.

■ Mounting direction

1) As shown in the diagram on the right, please install the sensor so that the expected trespassing direction corresponds to the X or Y direction. In some cases, moving towards or away from the sensor (parallel movement to the Z direction) may not be detected as expected sensitivity or distance.
2) ∗1 Please note that the horizontal and vertical field of view depends on the position of the metal tab on which the lens is mounted.

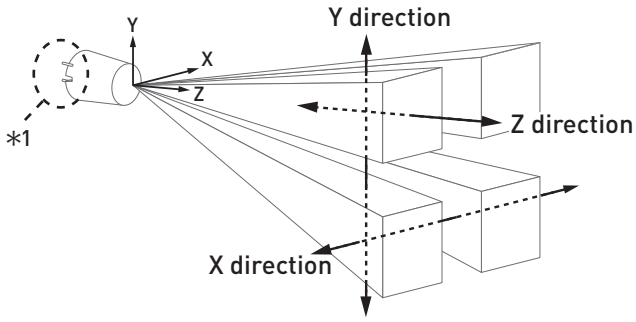

■ Basic principles

PaPIRs are pyroelectric infrared sensors that detect variations in infrared rays. However, detection may not be successful in the following cases: lack of movement or no temperature change in the heat source. They could also detect the presence of heat sources other than a human body. Efficiency and reliability of the system may vary depending on the actual operating conditions:

1) Detecting heat sources other than the human body, such as:
   a) small animals entering the detection area
   b) When a heat source, for example sun light, incandescent lamp, car headlights etc, or strong light beam hit the sensor regardless whether the detection area is inside or outside.
   c) Sudden temperature change inside or around the detection area caused by hot or cold wind from HVAC, or vapor from a humidifier, etc.
2) Difficulty in sensing the heat source
   a) Glass, acrylic or similar materials standing between the target and the sensor may not allow a correct transmission of infrared rays.
   b)Non-movement or quick movements of the heat source inside the detection area. (Please refer to the table on page 8 or 11 for details about movement speed.)
3) Expansion of the detection area
   In case of a considerable difference in the ambient temperature and the human body temperature, the detection area may be larger than the configured detection area.
4) Malfunction / Detection error
   On rare occasions, an erroneous detection signal may be output due to the nature of pyroelectric element. When the application cannot tolerate erroneous detection signals, take countermeasures by introducing a pulse-count circuit, etc.
5) Detection distance
   Panasonic's PIR Motion sensors state the detection distance in the specifications because they are usually provided with the lens (please refer to item 6) for lensless types. The PIR Motion sensor could detect variations in infrared rays however such variations are decided by following three factors.
   ・The temperature difference between the target and the surroundings: The larger the temperature difference, the easier it is to detect targets.
   ・Movement speed: If the target is moving at a slower or faster speed than specified in the tables, the detection ability may be lower.
   ・Target size: The human body is the standard. If the target is smaller or larger than specified in the table, the detection ability may be lower.
   The detection distance explained in our data sheet is defined by the three factors mentioned above. Panasonic's standard for the temperature difference between the target and the surrounding is defined as 4℃. The larger the temperature difference, the longer the detection distance. If the temperature difference is 8℃, which is twice as much as standard, the detection distance will be approx. 1.4 times longer than the distance at 4℃. For example, if targets at a distance of 5m can be detected at 4℃, then the sensor can detect targets at a distance of 7m at 8℃. (This is based on the theory that the detection sensitivity will vary inversely with the square of the distance.)
6) Lensless type
   The lensless type cannot detect any targets because it is not possible to focus infrared variations into the sensor chip. It is not possible to determine the detection distance and the field of view without a lens. Please provide your own lens based on your lens design concept.
7) Lens material and the plate setting in front of the lens
   Typically, the only material that can be passed by infrared rays is Polyethylene. (The lens material of Panasonic's PIR Motion sensors is "High density polyethylene, HDPE".) When you need to set a plate in front of the lens, please choose one made from the Polyethylene. Please note the thickness or color of the plate will affect the detection ability, e.g. it may make the detection distance shorter. Therefore, please confirm by testing the sensor with the plate under realistic conditions.

■ Cautions

1) Refer to the newest specification regarding optimal operating environment conditions.
2) Do not solder with a soldering iron above 350℃ (662° F) or for more than 3 seconds. This sensor should be hand-soldered.
3) To maintain stability of the product, always mount it on a printed circuit board.
4) Do not use liquids to wash the sensor. If washing fluid gets into the lens, it can reduce the performance.
5) Do not use a sensor after it falls on the ground.
6) The sensor may be damaged by ±200 volts of static electricity. Avoid direct hand contact with the pins and be very careful when operating the product.
7) When wiring the product, always use shielded cables and minimize the wiring length to prevent noise disturbances.
8) The inner circuit board can be destroyed by a voltage surge. The use of surge absorption elements is highly recommended. Surge resistance: below the power supply voltage value indicated in the section on maximum rated values.
9) Please use a stabilized power supply. Noise from the power supply can cause operating errors. Noise resistance: max. ±20V (square waves with a width of 50ns or 1μs) To reduce the effect of noise from the power supply , install a capacitor on the sensor's power supply pin.
10) Operation errors can be caused by noise from static electricity, lightnings, cell phones, amateur radio, broadcasting offices, etc
11) The detection performance can be reduced by dirt on the lens, please be careful.
12) The lens is made of soft materials (Polyethylene). Please avoid adding weight or impacts that may change its shape, causing operation errors or reduced performance.
13) The specified temperature and humidity levels are suggested to prolong usage. However, they do not guarantee durability or environmental resistance. Generally, high temperatures or high humidity levels will accelerate the deterioration of electrical components. Please consider both the planned usage and environment to determine the expected reliability and length of life of the product.
14) Do not attempt to clean this product with detergents or solvents such as benzene or alcohol, as these can cause shape or color alterations.
15) Avoid storage in high, low temperature or liquid environments. Also, avoid storage in environments containing corrosive gas, dust, salty air etc. Adverse conditions may cause performance deterioration and the sensor's main part or the metallic connectors could be damaged.
16) Storage conditions
    Temperature: +5 to +40℃ Humidity: 30 to 75%
    Please use within 1 year after delivery.

■ Safety precautions

Obey the following precautions to prevent injury or accidents.

1) Do not use these sensors under any circumstance in which the range of their ratings, environment conditions or other specifications are exceeded. Using the sensors in any way which causes their specifications to be exceeded may generate abnormally high levels of heat, emit smoke, etc., resulting in damage to the circuitry and possibly causing an accident.
2) Our company is committed to making products of the highest quality and reliability. Nevertheless, all electrical components are subject to natural deterioration, and durability of a product will depend on the operating environment and conditions of use. Continued use after such deterioration could lead to overheating, smoke or fire. Always use the product in conjunction with proper fire-prevention, safety and maintenance measures to avoid accidents, reduction in product life expectancy or break-down.
3) Before connecting, check the pin layout by referring to the connector wiring diagram, specifications diagram, etc., to verify that the connector is connected properly. Mistakes made in connection may cause unforeseen problems in operation, generate abnormally high levels of heat, emit smoke, etc., resulting in damage to the circuitry.
4) Do not use any motion sensor which has been disassembled or remodeled.
5) Failure modes of sensors include short-circuiting, open-circuiting and temperature rises. If this sensor is to be used in equipment where safety is a prime consideration, examine the possible effects of these failures on the equipment concerned, and ensure safety by providing protection circuits or protection devices.

Example : Safety equipment and devices Traffic signals Burglar and disaster prevention devices Controlling and safety device for trains and motor vehicles

Global Sales Network

Please access following URL for global network.

https://www3.panasonic.biz/ac/e/salesnetwork/index.jsp

East Asia

China :	Panasonic Industrial Device Sales (China) Co., Ltd.
Hong Kong :	Panasonic Industrial Devices Sales (Hong Kong) Co., Ltd.
Taiwan :	Panasonic Eco Solutions Sales Taiwan Co., Ltd.
Korea :	Panasonic Industrial Devices Sales Korea Co., Ltd.
Japan :	Panasonic Industrial Devices Sales Japan Co., Ltd.

The Americas

United States (Headquarters in NJ) :	Panasonic Industrial Devices Sales Company of America
Canada :	Panasonic Canada Inc
Brazil :	Panasonic Do Brasil Limitada

Asia-Pacific

Singapore / Indonesia / Vietnam :	Panasonic Asia Pacific Pte. Ltd.
	Panasonic Industrial Devices Automation Controls Sales Asia Pacific
India :	Panasonic India Pvt.Ltd. Industrial Division (INDD)
Thailand :	Panasonic Eco Solutions Sales (Thailand) Co., Ltd.
Malaysia :	Panasonic Industrial Devices Sales (M) Sdn. Bhd.
Phillipines :	Panasonic Phillipines (Sales Division of PMPC)
Turkey :	Panasonic Elektronik Satis A.S., PTR.

Europe

Germany (European Headquarters) :	Panasonic Electric Works Europe AG
Hungary :	Hungarian Representative Office
Nordic :	Panasonic Electric Works Europe AG Filial Nordic
Austria:	Panasonic Electric Works Austria GmbH
Benelux / France :	Panasonic Electric Works Sales Western Europe B.V.
Czech Republic :	Panasonic Electric Works Czech s.r.o.
Great Britain :	Panasonic Electric Works UK Limited
Italy :	Panasonic Electric Works Italia s.r.l.
Poland :	Panasonic Electric Works Polska sp. z o.o.
Spain :	Panasonic Electric Works Espana S.A.
Switzerland :	Panasonic Electric Works Schweiz AG

Panasonic Corporation
Eco Solutions Company
System Components Business Unit

- Address: 1048, Kadoma, Kadoma-shi
  Osaka 571-8686, Japan
- Telephone: +81-6-6900-2778
  (Sensors & Devices Promotion Department)
- Web: http://www3.panasonic.biz/ac/e/control/sensor/human/
  (PIR Motion Sensor PaPIRs)

Panasonic®

All Rights Reserved © 2016 COPYRIGHT Panasonic Corporation
Specifications are subject to change without notice.

Mouser Electronics

Authorized Distributor

Click to View Pricing, Inventory, Delivery & Lifecycle Information:

Panasonic:

EKMB1101111 EKMB1101112 EKMB1101113 EKMB1201111 EKMB1201112 EKMB1201113 EKMB1301111 EKMB1301112 EKMB1301113 EKMB1103111 EKMB1103112 EKMB1103113 EKMB1203111 EKMB1203112 EKMB1203113 EKMB1303111 EKMB1303112 EKMB1303113 EKMB1301113K EKMB1303111K EKMB1303112K EKMB1301112K EKMB1301111K EKMB1303113K EKMB1300100K EKMB1304113K EKMB1304112K EKMB1304111K EKMB1204111 EKMB1204112 EKMB1104112 EKMB1104113 EKMB1104111 EKMB1204113 EKMB1205112 EKMB1205113 EKMB1105112 EKMB1205111 EKMB1305112K EKMB1305113K EKMB1105113 EKMB1105111 EKMB1305111K EKMC1605111 EKMC1605113 EKMC1605112 EKMB1106111 EKMC4606111K EKMB1106112 EKMB1206111 EKMC2606111K EKMC7601112K EKMC7693111K EKMC7693113K EKMC4600100K EKMC4604111K EKMC4691112K EKMC7603111K EKMC4601113K EKMC7601111K EKMC2605112K EKMC4603113K EKMC7603112K EKMC2601111K EKMC2604112K EKMC2693112K EKMC4604112K EKMB1291112 EKMC4603112K EKMC4693111K EKMC7603113K EKMC2604113K EKMC7601113K EKMC7605113K EKMC7691112K EKMC2600100K EKMC2693111K EKMC2693113K EKMB1291113 EKMC2601112K EKMC4691113K EKMC4693112K EKMC7604111K EKMC7604113K EKMC1691112 EKMC2691112K EKMC4605111K EKMC4605113K EKMC4691111K EKMB1291111 EKMC1691113 EKMC2605111K EKMC7605112K EKMC7691111K EKMC2606112K EKMC7606111K EKMB1206112 EKMC7606112K EKMC7606113K EKMB1391111K

Общество с ограниченной ответственностью «МосЧип» ИНН 7719860671 / КПП 771901001
Адрес: 105318, г.Москва, ул.Щербаковская д.3, офис 1107

Данный компонент на территории Российской Федерации

Вы можете приобрести в компании MosChip.

Для оперативного оформления запроса Вам необходимо перейти по данной ссылке:

http://moschip.ru/get-element

Вы можете разместить у нас заказ для любого Вашего проекта, будь то серийное производство или разработка единичного прибора.

В нашем ассортименте представлены ведущие мировые производители активных и пассивных электронных компонентов.

Нашей специализацией является поставка электронной компонентной базы двойного назначения, продукции таких производителей как XILINX, Intel (ex.ALTERA), Vicor, Microchip, Texas Instruments, Analog Devices, Mini-Circuits, Amphenol, Glenair.

Сотрудничество с глобальными дистрибьюторами электронных компонентов, предоставляет возможность заказывать и получать с международных складов практически любой перечень компонентов в оптимальные для Вас сроки.

На всех этапах разработки и производства наши партнеры могут получить квалифицированную поддержку опытных инженеров.

Система менеджмента качества компании отвечает требованиям в соответствии с ГОСТ Р ИСО 9001, ГОСТ РВ 0015-002 и ЭС РД 009

Офис по работе с юридическими лицами:

105318, г.Москва, ул.Щербаковская д.3, офис 1107, 1118, ДЦ «Щербаковский»

Телефон: +7 495 668-12-70 (многоканальный)

Факс: +7 495 668-12-70 (доб.304)

E-mail: info@moschip.ru

Skype отдела продаж:
moschip.ru
moschip.ru_4
moschip.ru_6
moschip.ru_9