DIALIGHT PART NUMBER	LED COLOR		DIM "A"	DIM "B"
	POSITION 1	POSITION 2		
553-0102-300F	BLANK	GREEN DIFFUSED	.097	.122±.010
553-0103-300F	BLANK	YELLOW DIFFUSED	.097	.122±.010
553-0108-300F	BLANK	BLUE NON-TINTED DIFFUSED	.093	.110±.010
553-0111-300F	RED DIFFUSED	RED DIFFUSED	.097	.122±.010
553-0112-300F	RED DIFFUSED	GREEN DIFFUSED	.097	.122±.010
553-0113-300F	RED DIFFUSED	YELLOW DIFFUSED	.097	.122±.010
553-0117-300F	RED DIFFUSED	ORANGE DIFFUSED	.097	.122±.010
553-0121-300F	GREEN DIFFUSED	RED DIFFUSED	.097	.122±.010
553-0122-300F	GREEN DIFFUSED	GREEN DIFFUSED	.097	.122±.010
553-0123-300F	GREEN DIFFUSED	YELLOW DIFFUSED	.097	.122±.010
553-0127-300F	GREEN DIFFUSED	ORANGE DIFFUSED	.087	.115±.010
553-0131-300F	YELLOW DIFFUSED	RED DIFFUSED	.097	.122±.010
553-0132-300F	YELLOW DIFFUSED	GREEN DIFFUSED	.097	.122±.010
553-0133-300F	YELLOW DIFFUSED	YELLOW DIFFUSED	.097	.122±.010
553-0172-300F	ORANGE DIFFUSED	GREEN DIFFUSED	.097	.122±.010
553-0177-300F	ORANGE DIFFUSED	ORANGE DIFFUSED	.087	.115±.010
553-0188-300F	BLUE NON-TINTED DIFFUSED	BLUE NON-TINTED DIFFUSED	.093	.110±.005
553-0201-300F	BLANK	2 mA RED DIFFUSED	.087	.115±.010
553-0203-300F	BLANK	2 mA YELLOW DIFFUSED	.087	.115±.010
553-0211-300F	2 mA RED DIFFUSED	2 mA RED DIFFUSED	.087	.115±.010
553-0212-300F	2 mA RED DIFFUSED	2 mA GREEN DIFFUSED	.087	.115±.010
553-0213-300F	2 mA RED DIFFUSED	2 mA YELLOW DIFFUSED	.087	.115±.010
553-0221-300F	2 mA GREEN DIFFUSED	2 mA RED DIFFUSED	.087	.115±.010
553-0222-300F	2 mA GREEN DIFFUSED	2 mA GREEN DIFFUSED	.087	.115±.010
553-0223-300F	2 mA GREEN DIFFUSED	2 mA YELLOW DIFFUSED	.087	.115±.010
553-0232-300F	2 mA YELLOW DIFFUSED	2 mA GREEN DIFFUSED	.087	.115±.010
553-0233-300F	2 mA YELLOW DIFFUSED	2 mA YELLOW DIFFUSED	.087	.115±.010
553-0303-300F	BLANK	5 V YELLOW DIFFUSED	.087	.115±.010
553-0311-300F	5 V RED DIFFUSED	5 V RED DIFFUSED	.087	.115±.010
553-0312-300F	5 V RED DIFFUSED	5 V GREEN DIFFUSED	.087	.115±.010
553-0313-300F	5 V RED DIFFUSED	5 V YELLOW DIFFUSED	.087	.115±.010
553-0322-300F	5 V GREEN DIFFUSED	5 V GREEN DIFFUSED	.087	.115±.010
553-0323-300F	5 V GREEN DIFFUSED	5 V YELLOW DIFFUSED	.087	.115±.010
553-0332-300F	5 V YELLOW DIFFUSED	5 V GREEN DIFFUSED	.087	.115±.010
553-0333-300F	5 V YELLOW DIFFUSED	5 V YELLOW DIFFUSED	.087	.115±.010
553-0701-300F	BLANK	BI-COLOR RED/GREEN	.093	.118±.005
553-0711-300F	BI-COLOR RED/GREEN	BI-COLOR RED/GREEN	.093	.118±.005
553-0714-300F	BI-COLOR RED/GREEN	BI-COLOR YELLOW/GREEN	.093	.118±.005
553-0741-300F	BI-COLOR YELLOW/GREEN	BI-COLOR RED/GREEN	.093	.118±.005
553-0744-300F	BI-COLOR YELLOW/GREEN	BI-COLOR YELLOW/GREEN	.093	.118±.005
553-2211-300F	RED TINTED NON-DIFFUSED	RED TINTED NON-DIFFUSED	.087	.115±.010
553-2222-300F	GREEN TINTED NON-DIFFUSED	GREEN TINTED NON-DIFFUSED	.087	.115±.010
553-2223-300F	GREEN TINTED NON-DIFFUSED	YELLOW TINTED NON-DIFFUSED	.087	.115±.010
553-2232-300F	YELLOW TINTED NON-DIFFUSED	GREEN TINTED NON-DIFFUSED	.087	.115±.010
553-2233-300F	YELLOW TINTED NON-DIFFUSED	YELLOW TINTED NON-DIFFUSED	.087	.115±.010

REV	ECN NO	REVISIONS	DRN	CKD	APP	DATE
A	——	NEW RELEASE	TWC	——	——	——
B	——	ADDED P/N 553-2232-300F & DUAL DIMENSIONS; UPDATED NOTES; DELETED BACK VIEW.	AJF	KLJ	NO	9-29-10

NOTES:

1. LED LEAD DIMENSIONS SHOWN ARE MEASURED AT HOUSING EXIT.
2. LEADS TO FIT INTO HOLES SPACED AS PER PATTERN.
3. PIN NUMBERS FOR REFERENCE ONLY, DESIGNATION NON-EXISTENT ON PART.
4. DIALIGHT PART NUMBERS: 553-XXXX-300F.
5. THIS ASSEMBLY CONTAINS ELECTROSTATIC DISCHARGE SENSITIVE DEVICES (ESDS). MAINTAIN ALL PRECAUTIONARY MEASURES DURING ASSEMBLY, HANDLING, AND STORAGE IN ACCORDANCE WITH IPC-A-610.

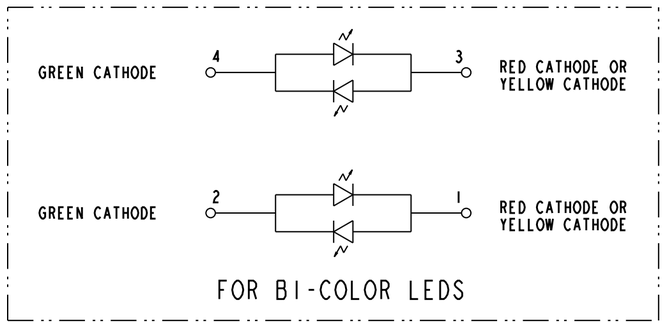

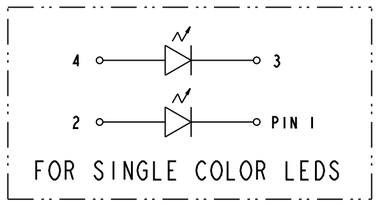

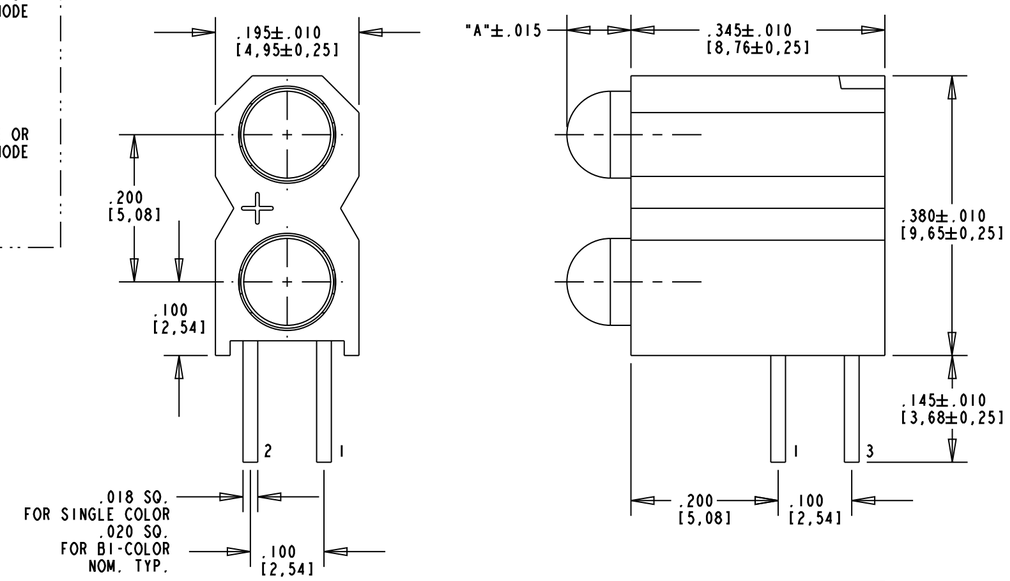

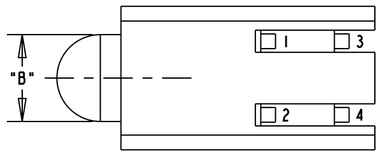

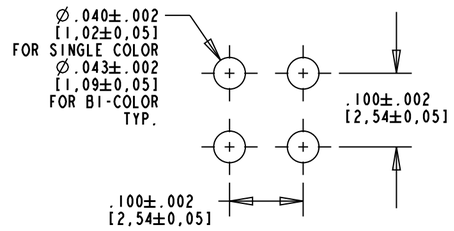

RECOMMENDED HOLE PATTERN GAUGE

10 mA NON-DIFFUSED LED [OPERATING CHARACTERISTICS AT 25°C]

CHARACTERISTICS	COLOR	MIN	TYP	MAX	UNITS	TEST CONDITIONS
LUMINOUS INTENSITY	RED	8.7	29		mcd	I_F = 10 mA
	YELLOW	10	50			
	GREEN	32	50			
FORWARD VOLTAGE	RED		2.0	2.8	V	I_F = 10 mA
	YELLOW		2.1	2.8		
	GREEN		2.1	2.8		
REVERSE VOLTAGE	RED	5			V	I_R = 100 µA
	YELLOW	5				
	GREEN	5				
PEAK WAVELENGTH	RED		635		nm	MEASURED AT PEAK
	YELLOW		585			
	GREEN		565			

10 mA DIFFUSED LED [OPERATING CHARACTERISTICS AT 25°C]

CHARACTERISTICS	COLOR	MIN	TYP	MAX	UNITS	TEST CONDITIONS
LUMINOUS INTENSITY	RED	3.6	10		mcd	I_F = 10 mA
	YELLOW	2.2	6.3			
	GREEN	5.6	16			
	BLUE	6.3		20		
	ORANGE	3.4	7.0			
FORWARD VOLTAGE	RED		2.0	3.0	V	I_F = 10 mA
	YELLOW		2.1	3.0		
	GREEN		2.1	3.0		
	BLUE		3.5	4.2		
	ORANGE	1.5	2.2	3.0		
REVERSE VOLTAGE	RED	3			V	I_R = 10 µA
	YELLOW	3				
	GREEN	3				
	BLUE	3				
	ORANGE	5				I_R = 100 µA
PEAK WAVELENGTH	RED		650		nm	MEASURED AT PEAK
	YELLOW		585			
	GREEN		563			
	BLUE		428			
	ORANGE		600			

BI-COLOR LED [OPERATING CHARACTERISTICS AT 25°C]

CHARACTERISTICS	COLOR	MIN	TYP	MAX	UNITS	TEST CONDITIONS
LUMINOUS INTENSITY	YELLOW GREEN	2.5	4.3 6.3		mcd	I_F = 10 mA
	RED GREEN	2.5 3.7	4.7 10.0			
FORWARD VOLTAGE	YELLOW GREEN		2.1	2.8	mA	I_F = 10 mA
	RED GREEN		2.0 2.1	2.8		
PEAK WAVELENGTH	YELLOW GREEN		585 565		nm	MEASURED AT PEAK
	RED GREEN		635 565			

2 mA NON-DIFFUSED LED [OPERATING CHARACTERISTICS AT 25°C]

CHARACTERISTICS	COLOR	MIN	TYP	MAX	UNITS	TEST CONDITIONS
LUMINOUS INTENSITY	RED	1.0	1.6		mcd	I_F = 2 mA
	YELLOW	1.0	1.6			
	GREEN	1.0	1.6			
FORWARD VOLTAGE	RED		1.7	2.2	V	I_F = 2 mA
	YELLOW		1.8	2.7		
	GREEN		1.9	2.2		
REVERSE VOLTAGE	RED	5			V	I_R = 50 µA
	YELLOW	5				
	GREEN	5				
PEAK WAVELENGTH	RED		635		nm	MEASURED AT PEAK
	YELLOW		585			
	GREEN		565			

5 V INTEGRAL RESISTOR LED [OPERATING CHARACTERISTICS AT 25°C]

CHARACTERISTICS	COLOR	MIN	TYP	MAX	UNITS	TEST CONDITIONS
LUMINOUS INTENSITY	RED	8.7	29		mcd	V_F = 5 V
	YELLOW	3.7	12.6			
	GREEN	5.6	19			
FORWARD CURRENT	RED		10	20	mA	V_F = 5 V
	YELLOW		10	20		
	GREEN		10	20		
REVERSE VOLTAGE	RED	5			V	I_R = 100 µA
	YELLOW	5				
	GREEN	5				
PEAK WAVELENGTH	RED		635		nm	MEASURED AT PEAK
	YELLOW		585			
	GREEN		565			

ATTENTION:
OBSERVE PRECAUTIONS FOR HANDLING ELECTROSTATIC SENSITIVE DEVICES

RoHS Compliant 553-XXXX-300F Thru hole Bi-level CBI

Part Numbers with the "F" suffix ending are RoHS Compliant.
Example: 553-0112-300F
The bag packaging is marked with "RoHS Compliant" label or equivalent markings.
Parts can be wave soldered, dip soldered or hand soldered using typical lead-free soldering process with max 260°C temp. for 5 sec.

THIS DRAWING AND THE CONTENTS HEREIN ARE CONFIDENTIAL AND THE SOLE PROPERTY OF DIALIGHT. REPRODUCTION OF THIS DRAWING OR CONSTRUCTION OF ANY PARTS WITHIN THIS DRAWING ARE FORBIDDEN WITHOUT THE WRITTEN CONSENT OF DIALIGHT.

SCALE: 6.000
ALL DIM'S IN: INCHES (MM)
TOLERANCES: UNLESS OTHERWISE SPECIFIED
FRACTIONS: ±1/64
DECIMALS (.XX): ±.02
DECIMALS (.XXX): ±.015
ANGLES: ±1°
FINISH:
FSCM 83330

DRAWING NUMBER C-17297 REV B
TITLE 3mm BI-LEVEL LED CBI RoHS COMPLIANT
MATERIAL

Dialight
1501 ROUTE 34 SOUTH
FARMINGDALE, NJ 07727

SHEET 1 OF 1 FAMILY TABLE:

Общество с ограниченной ответственностью «МосЧип» ИНН 7719860671 / КПП 771901001
Адрес: 105318, г.Москва, ул.Щербаковская д.3, офис 1107

Данный компонент на территории Российской Федерации

Вы можете приобрести в компании MosChip.

Для оперативного оформления запроса Вам необходимо перейти по данной ссылке:

http://moschip.ru/get-element

Вы можете разместить у нас заказ для любого Вашего проекта, будь то серийное производство или разработка единичного прибора.

В нашем ассортименте представлены ведущие мировые производители активных и пассивных электронных компонентов.

Нашей специализацией является поставка электронной компонентной базы двойного назначения, продукции таких производителей как XILINX, Intel (ex.ALTERA), Vicor, Microchip, Texas Instruments, Analog Devices, Mini-Circuits, Amphenol, Glenair.

Сотрудничество с глобальными дистрибьюторами электронных компонентов, предоставляет возможность заказывать и получать с международных складов практически любой перечень компонентов в оптимальные для Вас сроки.

На всех этапах разработки и производства наши партнеры могут получить квалифицированную поддержку опытных инженеров.

Система менеджмента качества компании отвечает требованиям в соответствии с ГОСТ Р ИСО 9001, ГОСТ РВ 0015-002 и ЭС РД 009

Офис по работе с юридическими лицами:

105318, г.Москва, ул.Щербаковская д.3, офис 1107, 1118, ДЦ «Щербаковский»

Телефон: +7 495 668-12-70 (многоканальный)

Факс: +7 495 668-12-70 (доб.304)

E-mail: info@moschip.ru

Skype отдела продаж:
moschip.ru
moschip.ru_4
moschip.ru_6
moschip.ru_9