TDK

July 2015

MLCC with Dipped Radial Lead

(Halogen-free, Automotive Grade)

FA Series

Type:

Lead pitch 5.0 mm
FA28 [4.0x5.5mm]
FA24 [4.5x5.5mm]
FA26 [5.5x6.0mm]
FA20 [5.5x7.0mm]
FA22 [7.5x8.5mm]

Lead pitch 2.5 mm
FA18 [4.0x5.5mm]
FA14 [4.5x5.5mm]
FA16 [5.5x6.0mm]
FA11 [5.5x7.0mm]

REMINDERS FOR USING THESE PRODUCTS

Before using these products, be sure to request the delivery specifications.

SAFETY REMINDERS

Please pay sufficient attention to the warnings for safe designing when using these products.

⚠ REMINDERS

- Do not use or store in locations where there are conditions such as gas corrosion (salt, acid, alkali, etc.).
- Before soldering, be sure to preheat components.
  The preheating temperature should be set so that the temperature difference between the solder temperature and product temperature does not exceed 150°C.
- Soldering corrections after mounting should be within the range of the conditions determined in the specifications.
  If overheated, a short circuit, performance deterioration, or lifespan shortening may occur.
- Self heating (temperature increase) occurs when the power is turned ON, so the tolerance should be sufficient for the set thermal design.
- Do not use for a purpose outside of the contents regulated in the delivery specifications.
- The products listed on this catalog are intended for use in automotive electronic equipment under a normal operation and use condition.
  The products are not designed or warranted to meet the requirements of the applications listed below, whose performance and/or quality require a more stringent level of safety or reliability, or whose failure, malfunction or trouble could cause serious damage to society, person or property.
  If you intend to use the products in the applications listed below or if you have special requirements exceeding the range or conditions set forth in the each catalog, please contact us.

(1) Aerospace/Aviation equipment
(2) Transportation equipment (electric trains, ships, etc.)
(3) Medical equipment
(4) Power-generation control equipment
(5) Atomic energy-related equipment
(6) Seabed equipment
(7) Transportation control equipment
(8) Public information-processing equipment
(9) Military equipment
(10) Electric heating apparatus, burning equipment
(11) Disaster prevention/crime prevention equipment
(12) Safety equipment
(13) Other applications that are not considered general-purpose applications

When designing your equipment even for automotive-purpose applications, you are kindly requested to take into consideration securing protection circuit/device or providing backup circuits in your equipment.

MLCC with Dipped Radial Lead

Halogen-free, Automotive Grade

Product compatible with RoHS directive
Halogen-free

Overview of the FA Series

FEATURES

- A complete lineup with a rated voltage of 25V to 630V.
- Compatible with a wide capacitance range of 1pF to 22μF.
- The FA series for automotive use is AEC-Q200 compliant.

APPLICATION

- Noise reduction measures for various motors for automotive use
- Resonant circuits in areas such as keyless entry systems
- Bypass capacitors such as for switching power sources, smoothing capacitors, etc.
- Snubber circuits
- PFC input filters

PART NUMBER CONSTRUCTION

FA	2	8	C0G	1H	010	C	□□□	□
Series name	Lead pitch (mm)	LxWxT Dimensions (mm)	Capacitance temperature characteristics	Rated voltage (V)	Nominal capacitance (pF)	Capacitance tolerance*	Internal code	Packaging Style**

Lead pitch (mm)	
1	2.5
2	5.0

LxWxT Dimensions (mm)	
8	4.0x5.5x2.5
4	4.5x5.5x3.0
6	5.5x6.0x3.5
0	5.5x7.0x4.0
1	5.5x7.0x4.0
2	7.5x8.5x4.5

Capacitance temperature characteristics	
C0G	0±30ppm/°C
X7R	±15%
X7S	±22%
X7T	+22, –33%

Rated voltage (V)	
1E	25
1H	50
2A	100
2E	250
2W	450
2J	630

Nominal capacitance (pF)	
010	1
100	10
101	100
102	1,000

Capacitance tolerance*	
C	±0.25pF
D	±0.5pF
J	±5%
K	±10%
M	±20%

Packaging Style**	
0	Bulk
6	Taping

* Applicable capacitance range: Max. 10 pF for C and D, over 10 pF for J, K, and M.
** Applied to the TDK's standard specification products.

OPERATING TEMPERATURE RANGE

Capacitance temperature characteristics	Temperature range	
	Operating temperature (°C)	Storage temperature* (°C)
C0G, X7R, X7S, X7T	–55 to +125	–55 to +125

* The Storage temperature range is for after the circuit board is mounted.

- RoHS Directive Compliant Product: See the following for more details related to RoHS Directive compliant products. http://product.tdk.com/en/environment/rohs/
- Halogen-free: Indicates that Cl content is less than 900ppm, Br content is less than 900ppm, and that the total Cl and Br content is less than 1500ppm.

⚠ Please be sure to request delivery specifications that provide further details on the features and specifications of the products for proper and safe use.
Please note that the contents may change without any prior notice due to reasons such as upgrading.

Overview of the FA Series

PACKAGE QUANTITY

Type	Package quantity	
	Taping (pieces / box)	Bulk (pieces / bag)
FA28	2000	500
FA24	2000	500
FA26	2000	500
FA20	1500	500
FA22	1000	500
FA18	2000	500
FA14	2000	500
FA16	2000	500
FA11	1500	500

⚠ Please be sure to request delivery specifications that provide further details on the features and specifications of the products for proper and safe use.
Please note that the contents may change without any prior notice due to reasons such as upgrading.

Overview of the FA Series

RECOMMENDED FLOW PROFILE

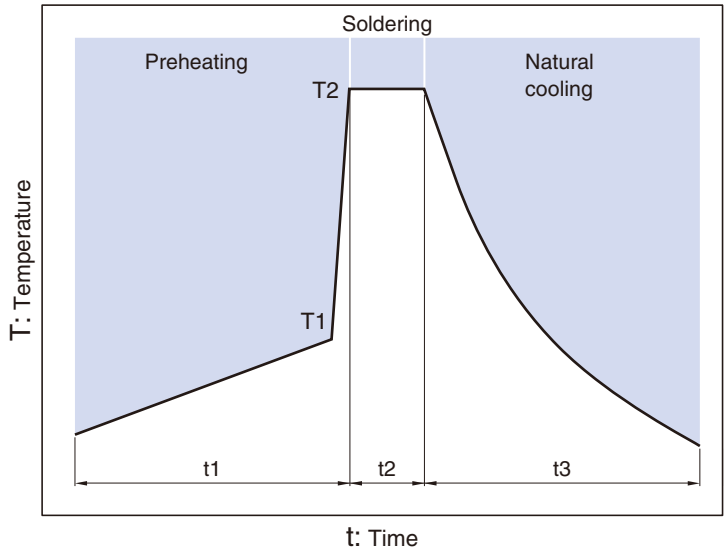

Preheating		Peak		Natural cooling
Temp.	**Time**	**Temp.**	**Time**	**Time**
T1	**t1**	**T2**	**t2**	**t3**
110°C min.	Over 60s.	260°C	Within 5s.	Over 60s.

⚠ Please be sure to request delivery specifications that provide further details on the features and specifications of the products for proper and safe use.
Please note that the contents may change without any prior notice due to reasons such as upgrading.

FA28 Type

SHAPE & DIMENSIONS

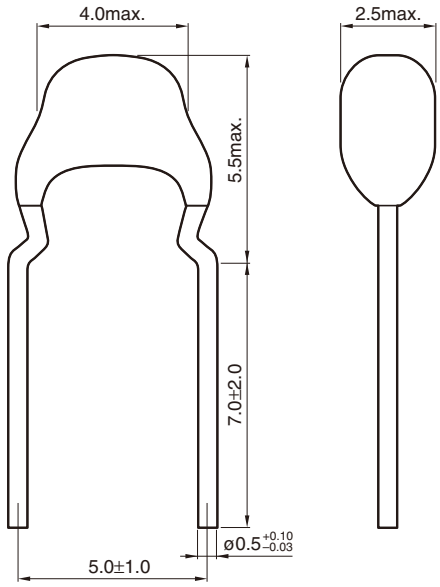

Dimensions in mm

⚠ Please be sure to request delivery specifications that provide further details on the features and specifications of the products for proper and safe use.
Please note that the contents may change without any prior notice due to reasons such as upgrading.

FA28 Type

■ELECTRICAL CHARACTERISTICS

□CHARACTERISTICS SPECIFICATION TABLE

CLASS 1 (TEMPERATURE COMPENSATION)

Temperature characteristics	Capacitance	Tolerance	Rated voltage Edc (V)	Part No.*
C0G	1.0pF	±0.25pF	50	FA28C0G1H010CNU0□**
C0G	1.5pF	±0.25pF	50	FA28C0G1H1R5CNU0□
C0G	2.2pF	±0.25pF	50	FA28C0G1H2R2CNU0□
C0G	3.3pF	±0.25pF	50	FA28C0G1H3R3CNU0□
C0G	4.7pF	±0.25pF	50	FA28C0G1H4R7CNU0□
C0G	6.8pF	±0.5pF	50	FA28C0G1H6R8DNU0□
C0G	10pF	±0.5pF	50	FA28C0G1H100DNU0□
C0G	15pF	±5%	50	FA28C0G1H150JNU0□
C0G	22pF	±5%	50	FA28C0G1H220JNU0□
C0G	33pF	±5%	50	FA28C0G1H330JNU0□
C0G	47pF	±5%	50	FA28C0G1H470JNU0□
C0G	68pF	±5%	50	FA28C0G1H680JNU0□
C0G	100pF	±5%	50	FA28C0G1H101JNU0□
C0G	120pF	±5%	50	FA28C0G1H121JNU0□
C0G	150pF	±5%	50	FA28C0G1H151JNU0□
C0G	180pF	±5%	50	FA28C0G1H181JNU0□
C0G	220pF	±5%	50	FA28C0G1H221JNU0□
C0G	270pF	±5%	50	FA28C0G1H271JNU0□
C0G	330pF	±5%	50	FA28C0G1H331JNU0□
C0G	390pF	±5%	50	FA28C0G1H391JNU0□
C0G	470pF	±5%	50	FA28C0G1H471JNU0□
C0G	560pF	±5%	50	FA28C0G1H561JNU0□
C0G	680pF	±5%	50	FA28C0G1H681JNU0□
C0G	820pF	±5%	50	FA28C0G1H821JNU0□
C0G	1nF	±5%	50	FA28C0G1H102JNU0□
C0G	1.2nF	±5%	50	FA28C0G1H122JNU0□
C0G	1.5nF	±5%	50	FA28C0G1H152JNU0□
C0G	1.8nF	±5%	50	FA28C0G1H182JNU0□
C0G	2.2nF	±5%	50	FA28C0G1H222JNU0□
C0G	2.7nF	±5%	50	FA28C0G1H272JNU0□
C0G	3.3nF	±5%	50	FA28C0G1H332JNU0□
C0G	3.9nF	±5%	50	FA28C0G1H392JNU0□
C0G	4.7nF	±5%	50	FA28C0G1H472JNU0□
C0G	5.6nF	±5%	50	FA28C0G1H562JNU0□
C0G	6.8nF	±5%	50	FA28C0G1H682JNU0□
C0G	8.2nF	±5%	50	FA28C0G1H822JNU0□
C0G	10nF	±5%	50	FA28C0G1H103JNU0□
C0G	1.0pF	±0.25pF	100	FA28C0G2A010CNU0□
C0G	1.5pF	±0.25pF	100	FA28C0G2A1R5CNU0□
C0G	2.2pF	±0.25pF	100	FA28C0G2A2R2CNU0□
C0G	3.3pF	±0.25pF	100	FA28C0G2A3R3CNU0□
C0G	4.7pF	±0.25pF	100	FA28C0G2A4R7CNU0□
C0G	6.8pF	±0.5pF	100	FA28C0G2A6R8DNU0□
C0G	10pF	±0.5pF	100	FA28C0G2A100DNU0□
C0G	15pF	±5%	100	FA28C0G2A150JNU0□
C0G	22pF	±5%	100	FA28C0G2A220JNU0□
C0G	33pF	±5%	100	FA28C0G2A330JNU0□
C0G	47pF	±5%	100	FA28C0G2A470JNU0□
C0G	68pF	±5%	100	FA28C0G2A680JNU0□
C0G	100pF	±5%	100	FA28C0G2A101JNU0□

* The part numbers are TDK's standard specification products.

** The " □ " of the Part Number contains the packaging symbol, 0 (Bulk packaging) or 6 (Taping packaging).

⚠ Please be sure to request delivery specifications that provide further details on the features and specifications of the products for proper and safe use.
Please note that the contents may change without any prior notice due to reasons such as upgrading.

FA28 Type

■ELECTRICAL CHARACTERISTICS

□CHARACTERISTICS SPECIFICATION TABLE

CLASS 1 (TEMPERATURE COMPENSATION)

Temperature characteristics	Capacitance	Tolerance	Rated voltage Edc (V)	Part No.*
C0G	120pF	±5%	100	FA28C0G2A121JNU0□**
C0G	150pF	±5%	100	FA28C0G2A151JNU0□
C0G	180pF	±5%	100	FA28C0G2A181JNU0□
C0G	220pF	±5%	100	FA28C0G2A221JNU0□
C0G	270pF	±5%	100	FA28C0G2A271JNU0□
C0G	330pF	±5%	100	FA28C0G2A331JNU0□
C0G	390pF	±5%	100	FA28C0G2A391JNU0□
C0G	470pF	±5%	100	FA28C0G2A471JNU0□
C0G	560pF	±5%	100	FA28C0G2A561JNU0□
C0G	680pF	±5%	100	FA28C0G2A681JNU0□
C0G	820pF	±5%	100	FA28C0G2A821JNU0□
C0G	1nF	±5%	100	FA28C0G2A102JNU0□
C0G	1.2nF	±5%	100	FA28C0G2A122JNU0□
C0G	1.5nF	±5%	100	FA28C0G2A152JNU0□
C0G	1.8nF	±5%	100	FA28C0G2A182JNU0□
C0G	2.2nF	±5%	100	FA28C0G2A222JNU0□
C0G	2.7nF	±5%	100	FA28C0G2A272JNU0□
C0G	3.3nF	±5%	100	FA28C0G2A332JNU0□
C0G	100pF	±5%	250	FA28C0G2E101JNU0□
C0G	120pF	±5%	250	FA28C0G2E121JNU0□
C0G	150pF	±5%	250	FA28C0G2E151JNU0□
C0G	180pF	±5%	250	FA28C0G2E181JNU0□
C0G	220pF	±5%	250	FA28C0G2E221JNU0□
C0G	270pF	±5%	250	FA28C0G2E271JNU0□
C0G	330pF	±5%	250	FA28C0G2E331JNU0□
C0G	390pF	±5%	250	FA28C0G2E391JNU0□
C0G	470pF	±5%	250	FA28C0G2E471JNU0□
C0G	560pF	±5%	250	FA28C0G2E561JNU0□
C0G	680pF	±5%	250	FA28C0G2E681JNU0□
C0G	820pF	±5%	250	FA28C0G2E821JNU0□
C0G	1nF	±5%	250	FA28C0G2E102JNU0□
C0G	1.2nF	±5%	250	FA28C0G2E122JNU0□
C0G	1.5nF	±5%	250	FA28C0G2E152JNU0□
C0G	1.8nF	±5%	250	FA28C0G2E182JNU0□
C0G	2.2nF	±5%	250	FA28C0G2E222JNU0□

* The part numbers are TDK's standard specification products.

** The " □ " of the Part Number contains the packaging symbol, 0 (Bulk packaging) or 6 (Taping packaging).

⚠ Please be sure to request delivery specifications that provide further details on the features and specifications of the products for proper and safe use.
Please note that the contents may change without any prior notice due to reasons such as upgrading.

FA28 Type

■ELECTRICAL CHARACTERISTICS

□CHARACTERISTICS SPECIFICATION TABLE

CLASS 2 (TEMPERATURE STABLE)

Temperature characteristics	Capacitance	Tolerance	Rated voltage Edc (V)	Part No.*
X7R	150nF	±10%	25	FA28X7R1E154KNU0□
X7R	680nF	±10%	25	FA28X7R1E684KRU0□
X7R	1uF	±10%	25	FA28X7R1E105KRU0□
X7R	1nF	±10%	50	FA28X7R1H102KNU0□
X7R	1.5nF	±10%	50	FA28X7R1H152KNU0□
X7R	2.2nF	±10%	50	FA28X7R1H222KNU0□
X7R	3.3nF	±10%	50	FA28X7R1H332KNU0□
X7R	4.7nF	±10%	50	FA28X7R1H472KNU0□
X7R	6.8nF	±10%	50	FA28X7R1H682KNU0□
X7R	10nF	±10%	50	FA28X7R1H103KNU0□
X7R	15nF	±10%	50	FA28X7R1H153KNU0□
X7R	22nF	±10%	50	FA28X7R1H223KNU0□
X7R	33nF	±10%	50	FA28X7R1H333KNU0□
X7R	47nF	±10%	50	FA28X7R1H473KNU0□
X7R	68nF	±10%	50	FA28X7R1H683KNU0□
X7R	100nF	±10%	50	FA28X7R1H104KNU0□
X7R	150nF	±10%	50	FA28X7R1H154KRU0□
X7R	220nF	±10%	50	FA28X7R1H224KRU0□
X7R	330nF	±10%	50	FA28X7R1H334KRU0□
X7R	470nF	±10%	50	FA28X7R1H474KRU0□
X7R	1nF	±10%	100	FA28X7R2A102KNU0□
X7R	1.5nF	±10%	100	FA28X7R2A152KNU0□
X7R	2.2nF	±10%	100	FA28X7R2A222KNU0□
X7R	3.3nF	±10%	100	FA28X7R2A332KNU0□
X7R	4.7nF	±10%	100	FA28X7R2A472KNU0□
X7R	6.8nF	±10%	100	FA28X7R2A682KNU0□
X7R	10nF	±10%	100	FA28X7R2A103KNU0□
X7R	15nF	±10%	100	FA28X7R2A153KNU0□
X7R	22nF	±10%	100	FA28X7R2A223KNU0□
X7S	33nF	±10%	100	FA28X7S2A333KRU0□
X7S	47nF	±10%	100	FA28X7S2A473KRU0□
X7S	68nF	±10%	100	FA28X7S2A683KRU0□
X7S	100nF	±10%	100	FA28X7S2A104KRU0□

* The part numbers are TDK's standard specification products.

** The " □ " of the Part Number contains the packaging symbol, 0 (Bulk packaging) or 6 (Taping packaging).

⚠ Please be sure to request delivery specifications that provide further details on the features and specifications of the products for proper and safe use.
Please note that the contents may change without any prior notice due to reasons such as upgrading.

FA24 Type

SHAPE & DIMENSIONS

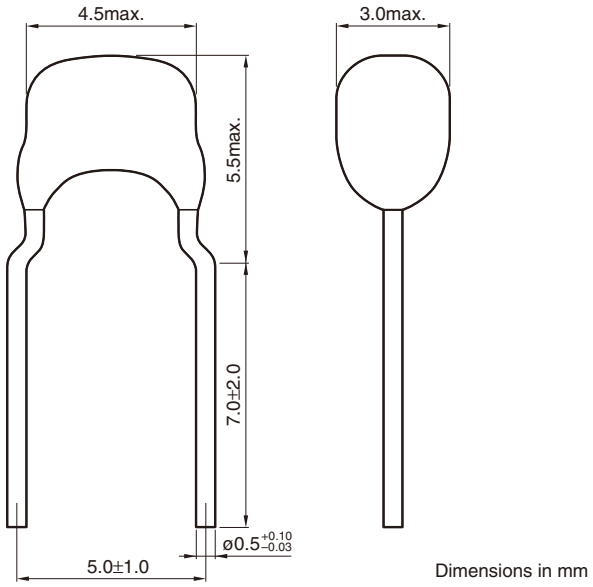

Dimensions in mm

⚠ Please be sure to request delivery specifications that provide further details on the features and specifications of the products for proper and safe use.
Please note that the contents may change without any prior notice due to reasons such as upgrading.

FA24 Type

■ELECTRICAL CHARACTERISTICS

□CHARACTERISTICS SPECIFICATION TABLE

CLASS 1 (TEMPERATURE COMPENSATION)

Temperature characteristics	Capacitance	Tolerance	Rated voltage Edc (V)	Part No.*
C0G	15nF	±5%	50	FA24C0G1H153JNU0□**
C0G	22nF	±5%	50	FA24C0G1H223JNU0□
C0G	33nF	±5%	50	FA24C0G1H333JNU0□
C0G	3.9nF	±5%	100	FA24C0G2A392JNU0□
C0G	4.7nF	±5%	100	FA24C0G2A472JNU0□
C0G	5.6nF	±5%	100	FA24C0G2A562JNU0□
C0G	6.8nF	±5%	100	FA24C0G2A682JNU0□
C0G	8.2nF	±5%	100	FA24C0G2A822JNU0□
C0G	10nF	±5%	100	FA24C0G2A103JNU0□
C0G	2.7nF	±5%	250	FA24C0G2E272JNU0□
C0G	3.3nF	±5%	250	FA24C0G2E332JNU0□
C0G	3.9nF	±5%	250	FA24C0G2E392JNU0□
C0G	4.7nF	±5%	250	FA24C0G2E472JNU0□
C0G	5.6nF	±5%	250	FA24C0G2E562JNU0□
C0G	6.8nF	±5%	250	FA24C0G2E682JNU0□
C0G	8.2nF	±5%	250	FA24C0G2E822JNU0□
C0G	10nF	±5%	250	FA24C0G2E103JNU0□
C0G	100pF	±5%	450	FA24C0G2W101JNU0□
C0G	120pF	±5%	450	FA24C0G2W121JNU0□
C0G	150pF	±5%	450	FA24C0G2W151JNU0□
C0G	180pF	±5%	450	FA24C0G2W181JNU0□
C0G	220pF	±5%	450	FA24C0G2W221JNU0□
C0G	270pF	±5%	450	FA24C0G2W271JNU0□
C0G	330pF	±5%	450	FA24C0G2W331JNU0□
C0G	390pF	±5%	450	FA24C0G2W391JNU0□
C0G	470pF	±5%	450	FA24C0G2W471JNU0□
C0G	560pF	±5%	450	FA24C0G2W561JNU0□
C0G	680pF	±5%	450	FA24C0G2W681JNU0□
C0G	820pF	±5%	450	FA24C0G2W821JNU0□
C0G	1nF	±5%	450	FA24C0G2W102JNU0□
C0G	1.2nF	±5%	450	FA24C0G2W122JNU0□
C0G	1.5nF	±5%	450	FA24C0G2W152JNU0□
C0G	1.8nF	±5%	450	FA24C0G2W182JNU0□
C0G	2.2nF	±5%	450	FA24C0G2W222JNU0□
C0G	2.7nF	±5%	450	FA24C0G2W272JNU0□
C0G	3.3nF	±5%	450	FA24C0G2W332JNU0□
C0G	3.9nF	±5%	450	FA24C0G2W392JNU0□
C0G	4.7nF	±5%	450	FA24C0G2W472JNU0□
C0G	5.6nF	±5%	450	FA24C0G2W562JNU0□

* The part numbers are TDK's standard specification products.

** The " □ " of the Part Number contains the packaging symbol, 0 (Bulk packaging) or 6 (Taping packaging).

⚠ Please be sure to request delivery specifications that provide further details on the features and specifications of the products for proper and safe use.
Please note that the contents may change without any prior notice due to reasons such as upgrading.

FA24 Type

■ELECTRICAL CHARACTERISTICS

□CHARACTERISTICS SPECIFICATION TABLE

CLASS 2 (TEMPERATURE STABLE)

Temperature characteristics	Capacitance	Tolerance	Rated voltage Edc (V)	Part No.*
X7R	470nF	±10%	25	FA24X7R1E474KNU0□
X7R	3.3uF	±10%	25	FA24X7R1E335KRU0□
X7R	4.7uF	±10%	25	FA24X7R1E475KRU0□
X7R	150nF	±10%	50	FA24X7R1H154KNU0□
X7R	220nF	±10%	50	FA24X7R1H224KNU0□
X7R	330nF	±10%	50	FA24X7R1H334KNU0□
X7R	680nF	±10%	50	FA24X7R1H684KRU0□
X7R	1uF	±10%	50	FA24X7R1H105KRU0□
X7R	1.5uF	±10%	50	FA24X7R1H155KRU0□
X7R	2.2uF	±10%	50	FA24X7R1H225KRU0□
X7R	33nF	±10%	100	FA24X7R2A333KNU0□
X7R	47nF	±10%	100	FA24X7R2A473KNU0□
X7R	68nF	±10%	100	FA24X7R2A683KNU0□
X7R	100nF	±10%	100	FA24X7R2A104KNU0□
X7R	1nF	±10%	250	FA24X7R2E102KNU0□
X7R	1.5nF	±10%	250	FA24X7R2E152KNU0□
X7R	2.2nF	±10%	250	FA24X7R2E222KNU0□
X7R	3.3nF	±10%	250	FA24X7R2E332KNU0□
X7R	4.7nF	±10%	250	FA24X7R2E472KNU0□
X7R	6.8nF	±10%	250	FA24X7R2E682KNU0□
X7R	10nF	±10%	250	FA24X7R2E103KNU0□
X7R	15nF	±10%	250	FA24X7R2E153KNU0□
X7R	22nF	±10%	250	FA24X7R2E223KNU0□
X7S	150nF	±10%	100	FA24X7S2A154KRU0□
X7S	220nF	±10%	100	FA24X7S2A224KRU0□
X7S	330nF	±10%	100	FA24X7S2A334KRU0□
X7S	470nF	±10%	100	FA24X7S2A474KRU0□
X7S	680nF	±10%	100	FA24X7S2A684KRU0□
X7S	1uF	±10%	100	FA24X7S2A105KRU0□
X7T	33nF	±10%	250	FA24X7T2E333KNU0□
X7T	47nF	±10%	250	FA24X7T2E473KNU0□
X7T	68nF	±10%	250	FA24X7T2E683KNU0□
X7T	100nF	±10%	250	FA24X7T2E104KNU0□

* The part numbers are TDK's standard specification products.

** The " □ " of the Part Number contains the packaging symbol, 0 (Bulk packaging) or 6 (Taping packaging).

⚠ Please be sure to request delivery specifications that provide further details on the features and specifications of the products for proper and safe use.
Please note that the contents may change without any prior notice due to reasons such as upgrading.

FA26 Type

SHAPE & DIMENSIONS

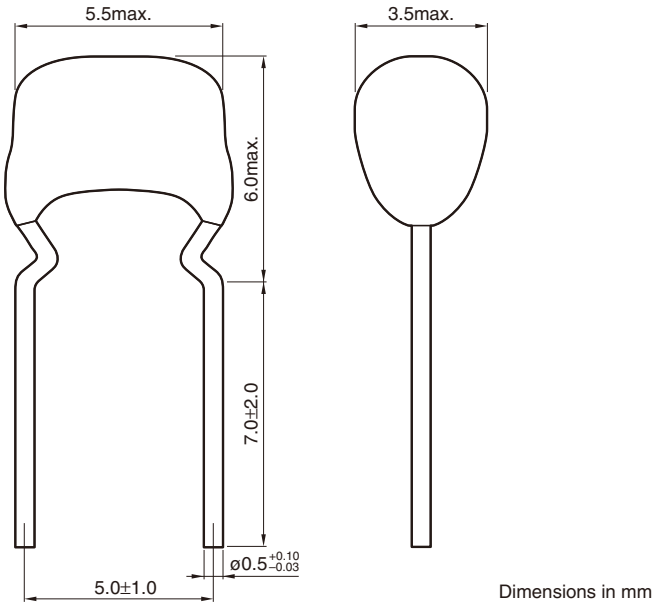

Dimensions in mm

⚠ Please be sure to request delivery specifications that provide further details on the features and specifications of the products for proper and safe use.
Please note that the contents may change without any prior notice due to reasons such as upgrading.

FA26 Type

■ELECTRICAL CHARACTERISTICS

□CHARACTERISTICS SPECIFICATION TABLE

CLASS 1 (TEMPERATURE COMPENSATION)

Temperature characteristics	Capacitance	Tolerance	Rated voltage Edc (V)	Part No.*
C0G	47nF	±5%	50	FA26C0G1H473JNU0□**
C0G	68nF	±5%	50	FA26C0G1H683JNU0□
C0G	100nF	±5%	50	FA26C0G1H104JNU0□
C0G	15nF	±5%	100	FA26C0G2A153JNU0□
C0G	22nF	±5%	100	FA26C0G2A223JNU0□
C0G	33nF	±5%	100	FA26C0G2A333JNU0□
C0G	15nF	±5%	250	FA26C0G2E153JNU0□
C0G	22nF	±5%	250	FA26C0G2E223JNU0□
C0G	6.8nF	±5%	450	FA26C0G2W682JNU0□
C0G	8.2nF	±5%	450	FA26C0G2W822JNU0□
C0G	10nF	±5%	450	FA26C0G2W103JNU0□
C0G	15nF	±5%	450	FA26C0G2W153JNU0□
C0G	100pF	±5%	630	FA26C0G2J101JNU0□
C0G	120pF	±5%	630	FA26C0G2J121JNU0□
C0G	150pF	±5%	630	FA26C0G2J151JNU0□
C0G	180pF	±5%	630	FA26C0G2J181JNU0□
C0G	220pF	±5%	630	FA26C0G2J221JNU0□
C0G	270pF	±5%	630	FA26C0G2J271JNU0□
C0G	330pF	±5%	630	FA26C0G2J331JNU0□
C0G	390pF	±5%	630	FA26C0G2J391JNU0□
C0G	470pF	±5%	630	FA26C0G2J471JNU0□
C0G	560pF	±5%	630	FA26C0G2J561JNU0□
C0G	680pF	±5%	630	FA26C0G2J681JNU0□
C0G	820pF	±5%	630	FA26C0G2J821JNU0□
C0G	1nF	±5%	630	FA26C0G2J102JNU0□
C0G	1.2nF	±5%	630	FA26C0G2J122JNU0□
C0G	1.5nF	±5%	630	FA26C0G2J152JNU0□
C0G	1.8nF	±5%	630	FA26C0G2J182JNU0□
C0G	2.2nF	±5%	630	FA26C0G2J222JNU0□
C0G	2.7nF	±5%	630	FA26C0G2J272JNU0□
C0G	3.3nF	±5%	630	FA26C0G2J332JNU0□
C0G	3.9nF	±5%	630	FA26C0G2J392JNU0□
C0G	4.7nF	±5%	630	FA26C0G2J472JNU0□
C0G	5.6nF	±5%	630	FA26C0G2J562JNU0□
C0G	6.8nF	±5%	630	FA26C0G2J682JNU0□
C0G	8.2nF	±5%	630	FA26C0G2J822JNU0□
C0G	10nF	±5%	630	FA26C0G2J103JNU0□

* The part numbers are TDK's standard specification products.

** The " □ " of the Part Number contains the packaging symbol, 0 (Bulk packaging) or 6 (Taping packaging).

⚠ Please be sure to request delivery specifications that provide further details on the features and specifications of the products for proper and safe use.
Please note that the contents may change without any prior notice due to reasons such as upgrading.

FA26 Type

■ELECTRICAL CHARACTERISTICS

□CHARACTERISTICS SPECIFICATION TABLE

CLASS 2 (TEMPERATURE STABLE)

Temperature characteristics	Capacitance	Tolerance	Rated voltage Edc (V)	Part No.*
X7R	1uF	±10%	25	FA26X7R1E105KNU0□**
X7R	1.5uF	±10%	25	FA26X7R1E155KNU0□
X7R	2.2uF	±10%	25	FA26X7R1E225KNU0□
X7R	6.8uF	±10%	25	FA26X7R1E685KRU0□
X7R	10uF	±10%	25	FA26X7R1E106KRU0□
X7R	470nF	±10%	50	FA26X7R1H474KNU0□
X7R	680nF	±10%	50	FA26X7R1H684KNU0□
X7R	3.3uF	±10%	50	FA26X7R1H335KRU0□
X7R	4.7uF	±10%	50	FA26X7R1H475KRU0□
X7R	150nF	±10%	100	FA26X7R2A154KNU0□
X7R	220nF	±10%	100	FA26X7R2A224KNU0□
X7R	330nF	±10%	100	FA26X7R2A334KNU0□
X7R	470nF	±10%	100	FA26X7R2A474KNU0□
X7R	680nF	±10%	100	FA26X7R2A684KNU0□
X7R	1uF	±10%	100	FA26X7R2A105KNU0□
X7R	33nF	±10%	250	FA26X7R2E333KNU0□
X7R	47nF	±10%	250	FA26X7R2E473KNU0□
X7R	68nF	±10%	250	FA26X7R2E683KNU0□
X7R	100nF	±10%	250	FA26X7R2E104KNU0□
X7R	1nF	±10%	630	FA26X7R2J102KNU0□
X7R	1.5nF	±10%	630	FA26X7R2J152KNU0□
X7R	2.2nF	±10%	630	FA26X7R2J222KNU0□
X7R	3.3nF	±10%	630	FA26X7R2J332KNU0□
X7R	4.7nF	±10%	630	FA26X7R2J472KNU0□
X7R	6.8nF	±10%	630	FA26X7R2J682KNU0□
X7R	10nF	±10%	630	FA26X7R2J103KNU0□
X7R	15nF	±10%	630	FA26X7R2J153KNU0□
X7R	22nF	±10%	630	FA26X7R2J223KNU0□
X7R	33nF	±10%	630	FA26X7R2J333KNU0□
X7S	1.5uF	±10%	100	FA26X7S2A155KRU0□
X7S	2.2uF	±10%	100	FA26X7S2A225KRU0□
X7S	3.3uF	±10%	100	FA26X7S2A335KRU0□
X7T	150nF	±10%	250	FA26X7T2E154KNU0□
X7T	220nF	±10%	250	FA26X7T2E224KNU0□

* The part numbers are TDK's standard specification products.

** The " □ " of the Part Number contains the packaging symbol, 0 (Bulk packaging) or 6 (Taping packaging).

⚠ Please be sure to request delivery specifications that provide further details on the features and specifications of the products for proper and safe use.
Please note that the contents may change without any prior notice due to reasons such as upgrading.

FA20 Type

SHAPE & DIMENSIONS

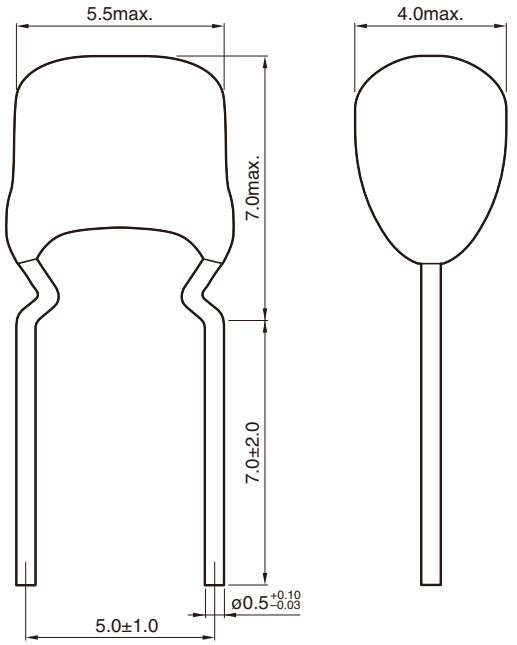

Dimensions in mm

⚠ Please be sure to request delivery specifications that provide further details on the features and specifications of the products for proper and safe use.
Please note that the contents may change without any prior notice due to reasons such as upgrading.

FA20 Type

■ELECTRICAL CHARACTERISTICS

□CHARACTERISTICS SPECIFICATION TABLE

CLASS 1 (TEMPERATURE COMPENSATION)

Temperature characteristics	Capacitance	Tolerance	Rated voltage Edc (V)	Part No.*
C0G	47nF	±5%	100	FA20C0G2A473JNU0□**
C0G	68nF	±5%	100	FA20C0G2A683JNU0□
C0G	33nF	±5%	250	FA20C0G2E333JNU0□
C0G	47nF	±5%	250	FA20C0G2E473JNU0□
C0G	22nF	±5%	450	FA20C0G2W223JNU0□
C0G	33nF	±5%	450	FA20C0G2W333JNU0□
C0G	15nF	±5%	630	FA20C0G2J153JNU0□
C0G	22nF	±5%	630	FA20C0G2J223JNU0□
C0G	33nF	±5%	630	FA20C0G2J333JNU0□

* The part numbers are TDK's standard specification products.

** The " □ " of the Part Number contains the packaging symbol, 0 (Bulk packaging) or 6 (Taping packaging).

CLASS 2 (TEMPERATURE STABLE)

Temperature characteristics	Capacitance	Tolerance	Rated voltage Edc (V)	Part No.*
X7R	3.3uF	±10%	25	FA20X7R1E335KNU0□**
X7R	4.7uF	±10%	25	FA20X7R1E475KNU0□
X7R	1uF	±10%	50	FA20X7R1H105KNU0□
X7R	1.5uF	±10%	50	FA20X7R1H155KNU0□
X7R	1.5uF	±10%	100	FA20X7R2A155KRU0□
X7R	2.2uF	±10%	100	FA20X7R2A225KRU0□
X7R	150nF	±10%	250	FA20X7R2E154KNU0□
X7R	220nF	±10%	250	FA20X7R2E224KNU0□
X7R	47nF	±10%	630	FA20X7R2J473KNU0□
X7R	68nF	±10%	630	FA20X7R2J683KNU0□
X7S	6.8uF	±10%	50	FA20X7S1H685KRU0□
X7S	10uF	±10%	50	FA20X7S1H106KRU0□
X7S	4.7uF	±10%	100	FA20X7S2A475KRU0□
X7T	330nF	±10%	250	FA20X7T2E334KNU0□

* The part numbers are TDK's standard specification products.

** The " □ " of the Part Number contains the packaging symbol, 0 (Bulk packaging) or 6 (Taping packaging).

⚠ Please be sure to request delivery specifications that provide further details on the features and specifications of the products for proper and safe use.
Please note that the contents may change without any prior notice due to reasons such as upgrading.

FA22 Type

SHAPE & DIMENSIONS

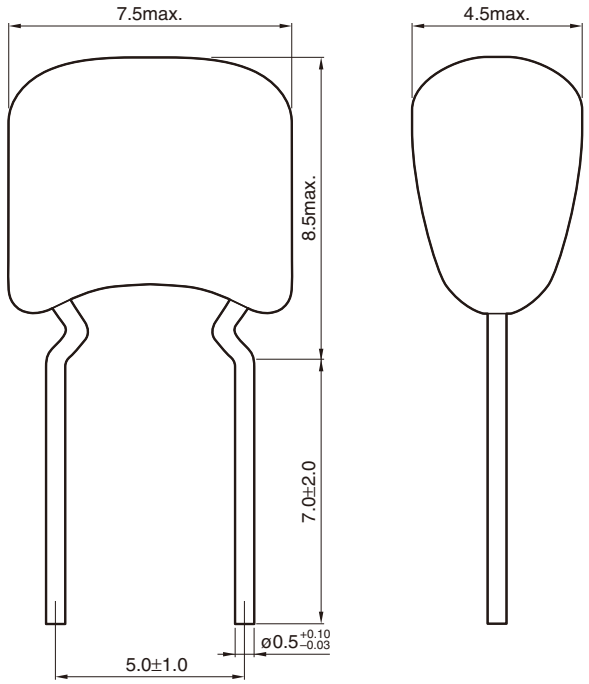

Dimensions in mm

FA22 Type

■ELECTRICAL CHARACTERISTICS

□CHARACTERISTICS SPECIFICATION TABLE

CLASS 1 (TEMPERATURE COMPENSATION)

Temperature characteristics	Capacitance	Tolerance	Rated voltage Edc (V)	Part No.*
C0G	150nF	±5%	50	FA22C0G1H154JNU0□**
C0G	220nF	±5%	50	FA22C0G1H224JNU0□
C0G	100nF	±5%	100	FA22C0G2A104JNU0□
C0G	68nF	±5%	250	FA22C0G2E683JRU0□
C0G	100nF	±5%	250	FA22C0G2E104JRU0□
C0G	47nF	±5%	450	FA22C0G2W473JNU0□
C0G	68nF	±5%	450	FA22C0G2W683JNU0□
C0G	47nF	±5%	630	FA22C0G2J473JNU0□

* The part numbers are TDK's standard specification products.

** The " □ " of the Part Number contains the packaging symbol, 0 (Bulk packaging) or 6 (Taping packaging).

CLASS 2 (TEMPERATURE STABLE)

Temperature characteristics	Capacitance	Tolerance	Rated voltage Edc (V)	Part No.*
X7R	10uF	±10%	25	FA22X7R1E106KNU0□**
X7R	15uF	±20%	25	FA22X7R1E156MRU0□
X7R	22uF	±20%	25	FA22X7R1E226MRU0□
X7R	2.2uF	±10%	50	FA22X7R1H225KNU0□
X7R	3.3uF	±10%	50	FA22X7R1H335KNU0□
X7R	4.7uF	±10%	50	FA22X7R1H475KRU0□
X7R	6.8uF	±10%	50	FA22X7R1H685KRU0□
X7R	1.5uF	±10%	100	FA22X7R2A155KNU0□
X7R	2.2uF	±10%	100	FA22X7R2A225KNU0□
X7R	330nF	±10%	250	FA22X7R2E334KNU0□
X7R	470nF	±10%	250	FA22X7R2E474KNU0□
X7R	100nF	±10%	630	FA22X7R2J104KNU0□
X7T	680nF	±10%	250	FA22X7T2E684KNU0□
X7T	1uF	±10%	250	FA22X7T2E105KNU0□

* The part numbers are TDK's standard specification products.

** The " □ " of the Part Number contains the packaging symbol, 0 (Bulk packaging) or 6 (Taping packaging).

⚠ Please be sure to request delivery specifications that provide further details on the features and specifications of the products for proper and safe use.
Please note that the contents may change without any prior notice due to reasons such as upgrading.

FA18 Type

SHAPE & DIMENSIONS

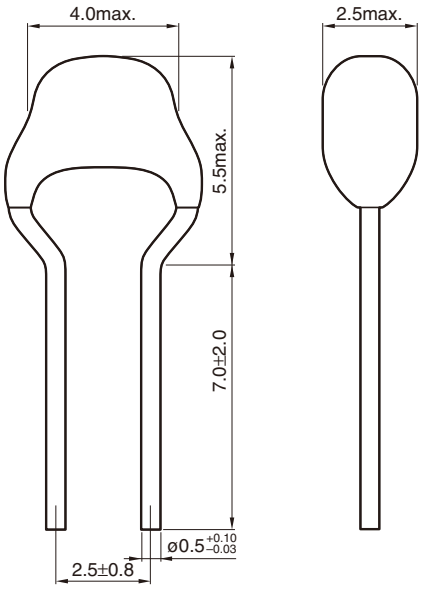

Dimensions in mm

⚠ Please be sure to request delivery specifications that provide further details on the features and specifications of the products for proper and safe use.
Please note that the contents may change without any prior notice due to reasons such as upgrading.

FA18 Type

■ELECTRICAL CHARACTERISTICS

□CHARACTERISTICS SPECIFICATION TABLE

CLASS 1 (TEMPERATURE COMPENSATION)

Temperature characteristics	Capacitance	Tolerance	Rated voltage Edc (V)	Part No.*
C0G	1.0pF	±0.25pF	50	FA18C0G1H010CNU0□**
C0G	1.5pF	±0.25pF	50	FA18C0G1H1R5CNU0□
C0G	2.2pF	±0.25pF	50	FA18C0G1H2R2CNU0□
C0G	3.3pF	±0.25pF	50	FA18C0G1H3R3CNU0□
C0G	4.7pF	±0.25pF	50	FA18C0G1H4R7CNU0□
C0G	6.8pF	±0.5pF	50	FA18C0G1H6R8DNU0□
C0G	10pF	±0.5pF	50	FA18C0G1H100DNU0□
C0G	15pF	±5%	50	FA18C0G1H150JNU0□
C0G	22pF	±5%	50	FA18C0G1H220JNU0□
C0G	33pF	±5%	50	FA18C0G1H330JNU0□
C0G	47pF	±5%	50	FA18C0G1H470JNU0□
C0G	68pF	±5%	50	FA18C0G1H680JNU0□
C0G	100pF	±5%	50	FA18C0G1H101JNU0□
C0G	120pF	±5%	50	FA18C0G1H121JNU0□
C0G	150pF	±5%	50	FA18C0G1H151JNU0□
C0G	180pF	±5%	50	FA18C0G1H181JNU0□
C0G	220pF	±5%	50	FA18C0G1H221JNU0□
C0G	270pF	±5%	50	FA18C0G1H271JNU0□
C0G	330pF	±5%	50	FA18C0G1H331JNU0□
C0G	390pF	±5%	50	FA18C0G1H391JNU0□
C0G	470pF	±5%	50	FA18C0G1H471JNU0□
C0G	560pF	±5%	50	FA18C0G1H561JNU0□
C0G	680pF	±5%	50	FA18C0G1H681JNU0□
C0G	820pF	±5%	50	FA18C0G1H821JNU0□
C0G	1nF	±5%	50	FA18C0G1H102JNU0□
C0G	1.2nF	±5%	50	FA18C0G1H122JNU0□
C0G	1.5nF	±5%	50	FA18C0G1H152JNU0□
C0G	1.8nF	±5%	50	FA18C0G1H182JNU0□
C0G	2.2nF	±5%	50	FA18C0G1H222JNU0□
C0G	2.7nF	±5%	50	FA18C0G1H272JNU0□
C0G	3.3nF	±5%	50	FA18C0G1H332JNU0□
C0G	3.9nF	±5%	50	FA18C0G1H392JNU0□
C0G	4.7nF	±5%	50	FA18C0G1H472JNU0□
C0G	5.6nF	±5%	50	FA18C0G1H562JNU0□
C0G	6.8nF	±5%	50	FA18C0G1H682JNU0□
C0G	8.2nF	±5%	50	FA18C0G1H822JNU0□
C0G	10nF	±5%	50	FA18C0G1H103JNU0□
C0G	1.0pF	±0.25pF	100	FA18C0G2A010CNU0□
C0G	1.5pF	±0.25pF	100	FA18C0G2A1R5CNU0□
C0G	2.2pF	±0.25pF	100	FA18C0G2A2R2CNU0□
C0G	3.3pF	±0.25pF	100	FA18C0G2A3R3CNU0□
C0G	4.7pF	±0.25pF	100	FA18C0G2A4R7CNU0□
C0G	6.8pF	±0.5pF	100	FA18C0G2A6R8DNU0□
C0G	10pF	±0.5pF	100	FA18C0G2A100DNU0□
C0G	15pF	±5%	100	FA18C0G2A150JNU0□
C0G	22pF	±5%	100	FA18C0G2A220JNU0□
C0G	33pF	±5%	100	FA18C0G2A330JNU0□
C0G	47pF	±5%	100	FA18C0G2A470JNU0□
C0G	68pF	±5%	100	FA18C0G2A680JNU0□
C0G	100pF	±5%	100	FA18C0G2A101JNU0□

* The part numbers are TDK's standard specification products.

** The " □ " of the Part Number contains the packaging symbol, 0 (Bulk packaging) or 6 (Taping packaging).

⚠ Please be sure to request delivery specifications that provide further details on the features and specifications of the products for proper and safe use.
Please note that the contents may change without any prior notice due to reasons such as upgrading.

FA18 Type

■ELECTRICAL CHARACTERISTICS

□CHARACTERISTICS SPECIFICATION TABLE

CLASS 1 (TEMPERATURE COMPENSATION)

Temperature characteristics	Capacitance	Tolerance	Rated voltage Edc (V)	Part No.*
C0G	120pF	±5%	100	FA18C0G2A121JNU0□**
C0G	150pF	±5%	100	FA18C0G2A151JNU0□
C0G	180pF	±5%	100	FA18C0G2A181JNU0□
C0G	220pF	±5%	100	FA18C0G2A221JNU0□
C0G	270pF	±5%	100	FA18C0G2A271JNU0□
C0G	330pF	±5%	100	FA18C0G2A331JNU0□
C0G	390pF	±5%	100	FA18C0G2A391JNU0□
C0G	470pF	±5%	100	FA18C0G2A471JNU0□
C0G	560pF	±5%	100	FA18C0G2A561JNU0□
C0G	680pF	±5%	100	FA18C0G2A681JNU0□
C0G	820pF	±5%	100	FA18C0G2A821JNU0□
C0G	1nF	±5%	100	FA18C0G2A102JNU0□
C0G	1.2nF	±5%	100	FA18C0G2A122JNU0□
C0G	1.5nF	±5%	100	FA18C0G2A152JNU0□
C0G	1.8nF	±5%	100	FA18C0G2A182JNU0□
C0G	2.2nF	±5%	100	FA18C0G2A222JNU0□
C0G	2.7nF	±5%	100	FA18C0G2A272JNU0□
C0G	3.3nF	±5%	100	FA18C0G2A332JNU0□

* The part numbers are TDK's standard specification products.

** The " □ " of the Part Number contains the packaging symbol, 0 (Bulk packaging) or 6 (Taping packaging).

⚠ Please be sure to request delivery specifications that provide further details on the features and specifications of the products for proper and safe use.
Please note that the contents may change without any prior notice due to reasons such as upgrading.

FA18 Type

■ELECTRICAL CHARACTERISTICS

□CHARACTERISTICS SPECIFICATION TABLE

CLASS 2 (TEMPERATURE STABLE)

Temperature characteristics	Capacitance	Tolerance	Rated voltage Edc (V)	Part No.*
X7R	150nF	±10%	25	FA18X7R1E154KNU0□**
X7R	680nF	±10%	25	FA18X7R1E684KRU0□
X7R	1uF	±10%	25	FA18X7R1E105KRU0□
X7R	1nF	±10%	50	FA18X7R1H102KNU0□
X7R	1.5nF	±10%	50	FA18X7R1H152KNU0□
X7R	2.2nF	±10%	50	FA18X7R1H222KNU0□
X7R	3.3nF	±10%	50	FA18X7R1H332KNU0□
X7R	4.7nF	±10%	50	FA18X7R1H472KNU0□
X7R	6.8nF	±10%	50	FA18X7R1H682KNU0□
X7R	10nF	±10%	50	FA18X7R1H103KNU0□
X7R	15nF	±10%	50	FA18X7R1H153KNU0□
X7R	22nF	±10%	50	FA18X7R1H223KNU0□
X7R	33nF	±10%	50	FA18X7R1H333KNU0□
X7R	47nF	±10%	50	FA18X7R1H473KNU0□
X7R	68nF	±10%	50	FA18X7R1H683KNU0□
X7R	100nF	±10%	50	FA18X7R1H104KNU0□
X7R	150nF	±10%	50	FA18X7R1H154KRU0□
X7R	220nF	±10%	50	FA18X7R1H224KRU0□
X7R	330nF	±10%	50	FA18X7R1H334KRU0□
X7R	470nF	±10%	50	FA18X7R1H474KRU0□
X7R	1nF	±10%	100	FA18X7R2A102KNU0□
X7R	1.5nF	±10%	100	FA18X7R2A152KNU0□
X7R	2.2nF	±10%	100	FA18X7R2A222KNU0□
X7R	3.3nF	±10%	100	FA18X7R2A332KNU0□
X7R	4.7nF	±10%	100	FA18X7R2A472KNU0□
X7R	6.8nF	±10%	100	FA18X7R2A682KNU0□
X7R	10nF	±10%	100	FA18X7R2A103KNU0□
X7R	15nF	±10%	100	FA18X7R2A153KNU0□
X7R	22nF	±10%	100	FA18X7R2A223KNU0□
X7S	33nF	±10%	100	FA18X7S2A333KRU0□
X7S	47nF	±10%	100	FA18X7S2A473KRU0□
X7S	68nF	±10%	100	FA18X7S2A683KRU0□
X7S	100nF	±10%	100	FA18X7S2A104KRU0□

* The part numbers are TDK's standard specification products.

** The " □ " of the Part Number contains the packaging symbol, 0 (Bulk packaging) or 6 (Taping packaging).

⚠ Please be sure to request delivery specifications that provide further details on the features and specifications of the products for proper and safe use.
Please note that the contents may change without any prior notice due to reasons such as upgrading.

FA14 Type

SHAPE & DIMENSIONS

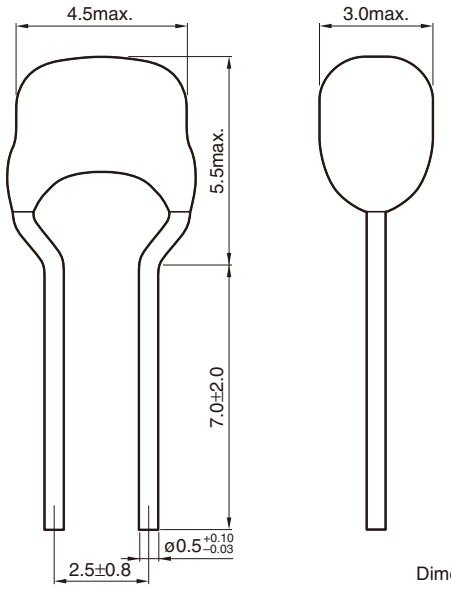

Dimensions in mm

⚠ Please be sure to request delivery specifications that provide further details on the features and specifications of the products for proper and safe use.
Please note that the contents may change without any prior notice due to reasons such as upgrading.

FA14 Type

■ELECTRICAL CHARACTERISTICS

□CHARACTERISTICS SPECIFICATION TABLE

CLASS 1 (TEMPERATURE COMPENSATION)

Temperature characteristics	Capacitance	Tolerance	Rated voltage Edc (V)	Part No.*
C0G	15nF	±5%	50	FA14C0G1H153JNU0□
C0G	22nF	±5%	50	FA14C0G1H223JNU0□
C0G	33nF	±5%	50	FA14C0G1H333JNU0□
C0G	3.9nF	±5%	100	FA14C0G2A392JNU0□
C0G	4.7nF	±5%	100	FA14C0G2A472JNU0□
C0G	5.6nF	±5%	100	FA14C0G2A562JNU0□
C0G	6.8nF	±5%	100	FA14C0G2A682JNU0□
C0G	8.2nF	±5%	100	FA14C0G2A822JNU0□
C0G	10nF	±5%	100	FA14C0G2A103JNU0□

* The part numbers are TDK's standard specification products.

** The " □ " of the Part Number contains the packaging symbol, 0 (Bulk packaging) or 6 (Taping packaging).

□CHARACTERISTICS SPECIFICATION TABLE

CLASS 2 (TEMPERATURE STABLE)

Temperature characteristics	Capacitance	Tolerance	Rated voltage Edc (V)	Part No.*
X7R	470nF	±10%	25	FA14X7R1E474KNU0□**
X7R	3.3uF	±10%	25	FA14X7R1E335KRU0□
X7R	4.7uF	±10%	25	FA14X7R1E475KRU0□
X7R	150nF	±10%	50	FA14X7R1H154KNU0□
X7R	220nF	±10%	50	FA14X7R1H224KNU0□
X7R	330nF	±10%	50	FA14X7R1H334KNU0□
X7R	680nF	±10%	50	FA14X7R1H684KRU0□
X7R	1uF	±10%	50	FA14X7R1H105KRU0□
X7R	1.5uF	±10%	50	FA14X7R1H155KRU0□
X7R	2.2uF	±10%	50	FA14X7R1H225KRU0□
X7R	33nF	±10%	100	FA14X7R2A333KNU0□
X7R	47nF	±10%	100	FA14X7R2A473KNU0□
X7R	68nF	±10%	100	FA14X7R2A683KNU0□
X7R	100nF	±10%	100	FA14X7R2A104KNU0□
X7S	150nF	±10%	100	FA14X7S2A154KRU0□
X7S	220nF	±10%	100	FA14X7S2A224KRU0□
X7S	330nF	±10%	100	FA14X7S2A334KRU0□
X7S	470nF	±10%	100	FA14X7S2A474KRU0□
X7S	680nF	±10%	100	FA14X7S2A684KRU0□
X7S	1uF	±10%	100	FA14X7S2A105KRU0□

* The part numbers are TDK's standard specification products.

** The " □ " of the Part Number contains the packaging symbol, 0 (Bulk packaging) or 6 (Taping packaging).

⚠ Please be sure to request delivery specifications that provide further details on the features and specifications of the products for proper and safe use.
Please note that the contents may change without any prior notice due to reasons such as upgrading.

FA16 Type

SHAPE & DIMENSIONS

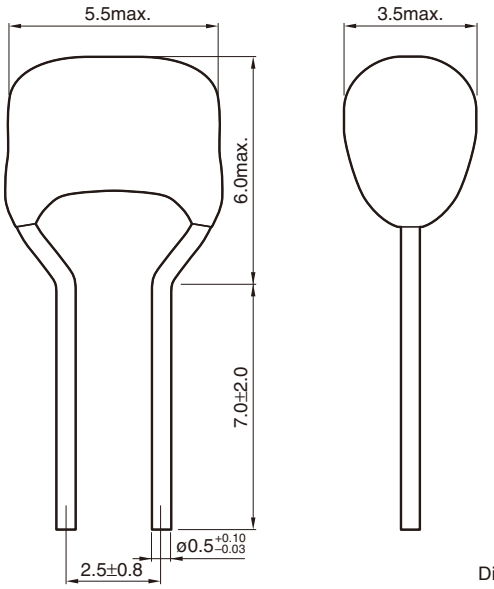

Dimensions in mm

⚠ Please be sure to request delivery specifications that provide further details on the features and specifications of the products for proper and safe use.
Please note that the contents may change without any prior notice due to reasons such as upgrading.

FA16 Type

■ELECTRICAL CHARACTERISTICS

□CHARACTERISTICS SPECIFICATION TABLE

CLASS 1 (TEMPERATURE COMPENSATION)

Temperature characteristics	Capacitance	Tolerance	Rated voltage Edc (V)	Part No.*
C0G	47nF	±5%	50	FA16C0G1H473JNU0□**
C0G	68nF	±5%	50	FA16C0G1H683JNU0□
C0G	100nF	±5%	50	FA16C0G1H104JNU0□
C0G	15nF	±5%	100	FA16C0G2A153JNU0□
C0G	22nF	±5%	100	FA16C0G2A223JNU0□
C0G	33nF	±5%	100	FA16C0G2A333JNU0□

* The part numbers are TDK's standard specification products.

** The " □ " of the Part Number contains the packaging symbol, 0 (Bulk packaging) or 6 (Taping packaging).

□CHARACTERISTICS SPECIFICATION TABLE

CLASS 2 (TEMPERATURE STABLE)

Temperature characteristics	Capacitance	Tolerance	Rated voltage Edc (V)	Part No.*
X7R	1uF	±10%	25	FA16X7R1E105KNU0□**
X7R	1.5uF	±10%	25	FA16X7R1E155KNU0□
X7R	2.2uF	±10%	25	FA16X7R1E225KNU0□
X7R	6.8uF	±10%	25	FA16X7R1E685KRU0□
X7R	10uF	±10%	25	FA16X7R1E106KRU0□
X7R	470nF	±10%	50	FA16X7R1H474KNU0□
X7R	680nF	±10%	50	FA16X7R1H684KNU0□
X7R	3.3uF	±10%	50	FA16X7R1H335KRU0□
X7R	4.7uF	±10%	50	FA16X7R1H475KRU0□
X7R	150nF	±10%	100	FA16X7R2A154KNU0□
X7R	220nF	±10%	100	FA16X7R2A224KNU0□
X7R	330nF	±10%	100	FA16X7R2A334KNU0□
X7R	470nF	±10%	100	FA16X7R2A474KNU0□
X7R	680nF	±10%	100	FA16X7R2A684KNU0□
X7R	1uF	±10%	100	FA16X7R2A105KNU0□
X7S	1.5uF	±10%	100	FA16X7S2A155KRU0□
X7S	2.2uF	±10%	100	FA16X7S2A225KRU0□
X7S	3.3uF	±10%	100	FA16X7S2A335KRU0□

* The part numbers are TDK's standard specification products.

** The " □ " of the Part Number contains the packaging symbol, 0 (Bulk packaging) or 6 (Taping packaging).

⚠ Please be sure to request delivery specifications that provide further details on the features and specifications of the products for proper and safe use.
Please note that the contents may change without any prior notice due to reasons such as upgrading.

FA11 Type

SHAPE & DIMENSIONS

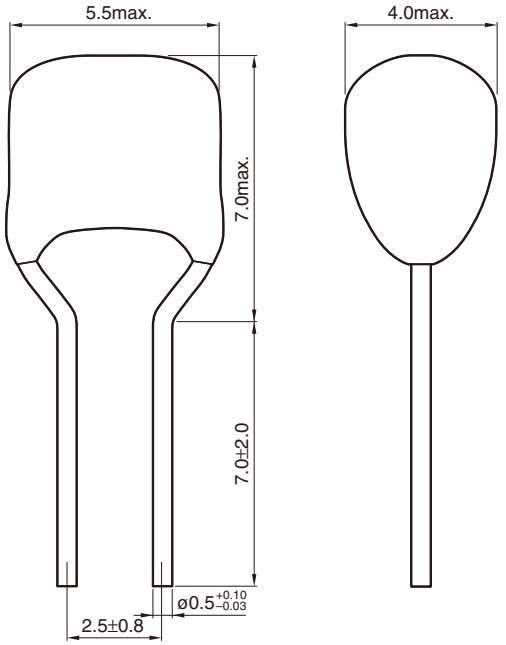

Dimensions in mm

FA11 Type

■ELECTRICAL CHARACTERISTICS

□CHARACTERISTICS SPECIFICATION TABLE

CLASS 1 (TEMPERATURE COMPENSATION)

Temperature characteristics	Capacitance	Tolerance	Rated voltage Edc (V)	Part No.*
C0G	47nF	±5%	100	FA11C0G2A473JNU0□**
C0G	68nF	±5%	100	FA11C0G2A683JNU0□

* The part numbers are TDK's standard specification products.

** The " □ " of the Part Number contains the packaging symbol, 0 (Bulk packaging) or 6 (Taping packaging).

CLASS 2 (TEMPERATURE STABLE)

Temperature characteristics	Capacitance	Tolerance	Rated voltage Edc (V)	Part No.*
X7R	3.3uF	±10%	25	FA11X7R1E335KNU0□**
X7R	4.7uF	±10%	25	FA11X7R1E475KNU0□
X7R	1uF	±10%	50	FA11X7R1H105KNU0□
X7R	1.5uF	±10%	50	FA11X7R1H155KNU0□
X7R	1.5uF	±10%	100	FA11X7R2A155KRU0□
X7R	2.2uF	±10%	100	FA11X7R2A225KRU0□
X7S	6.8uF	±10%	50	FA11X7S1H685KRU0□
X7S	10uF	±10%	50	FA11X7S1H106KRU0□
X7S	4.7uF	±10%	100	FA11X7S2A475KRU0□

* The part numbers are TDK's standard specification products.

** The " □ " of the Part Number contains the packaging symbol, 0 (Bulk packaging) or 6 (Taping packaging).

⚠ Please be sure to request delivery specifications that provide further details on the features and specifications of the products for proper and safe use.
Please note that the contents may change without any prior notice due to reasons such as upgrading.

Packaging Style

■TAPING DIMENSIONS

□Lead pitch 5.0 mm
(FA28, FA24, FA26, FA20, FA22 Type)

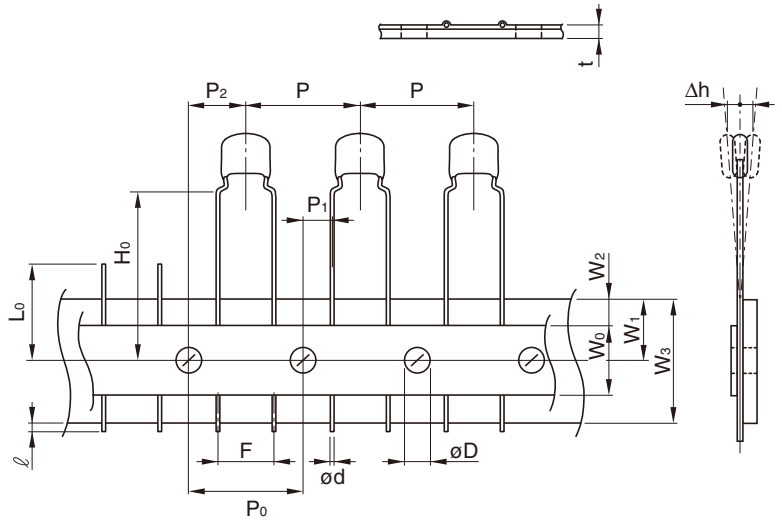

Symbol	Dimensions (mm)
P	12.7±1.0
P_0*1	12.7±0.3
P_1	3.85±0.7
P_2	6.35±1.3
W_0	12.0±1.0
W_1	9.0±0.5
W_2*2	3.0max.
W_3	18.0+1.0, –0.5
H_0	16.0±0.5
ℓ	1.0max.
t	0.6±0.2
L_0*3	11.0max.
F	5.0+0.8, –0.2
ød	ø0.5+0.1, –0.03
øD	ø4.0±0.2
Δh	0±2

*1 Accumulated pitch tolerance shall be ±2mm for 20 pitches.
*2 Adhesive tape shall not stick out from carrier tape.
*3 The number of consecutive gaps in the product shall be three or less.

□Lead pitch 2.5 mm
(FA18, FA14, FA16, FA11 Type)

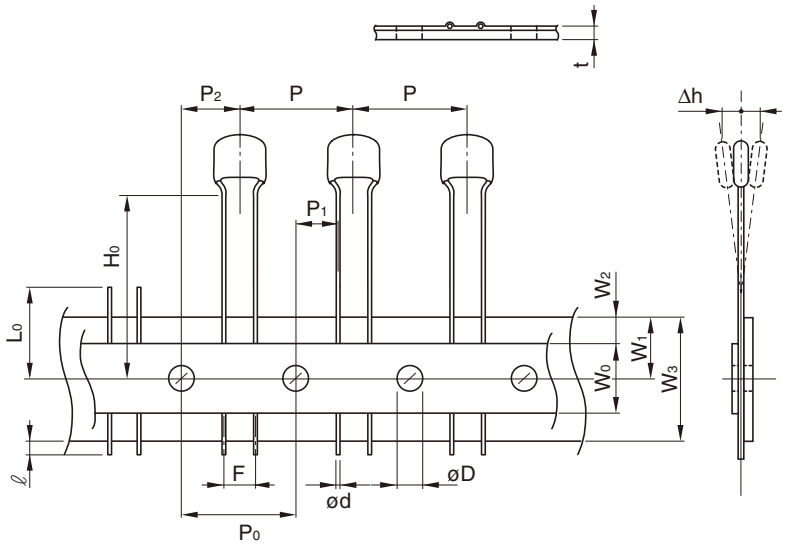

Symbol	Dimensions (mm)
P	12.7±1.0
P_0*1	12.7±0.3
P_1	5.1±0.7
P_2	6.35±1.3
W_0	12.0±1.0
W_1	9.0±0.5
W_2*2	3.0max.
W_3	18.0+1.0, –0.5
H_0	16.0±0.5
ℓ	1.0max.
t	0.6±0.2
L_0*3	11.0max.
F	2.5+0.5, –0.2
ød	ø0.5+0.1, –0.03
øD	ø4.0±0.2
Δh	0±2

*1 Accumulated pitch tolerance shall be ±2mm for 20 pitches.
*2 Adhesive tape shall not stick out from carrier tape.
*3 The number of consecutive gaps in the product shall be three or less.

■AMMO PACK INNER BOX SIZE

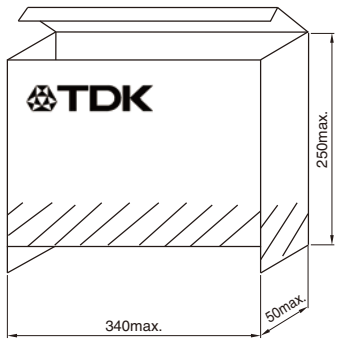

Dimensions in mm

⚠ Please be sure to request delivery specifications that provide further details on the features and specifications of the products for proper and safe use.
Please note that the contents may change without any prior notice due to reasons such as upgrading.

Общество с ограниченной ответственностью «МосЧип» ИНН 7719860671 / КПП 771901001
Адрес: 105318, г.Москва, ул.Щербаковская д.3, офис 1107

Данный компонент на территории Российской Федерации

Вы можете приобрести в компании MosChip.

Для оперативного оформления запроса Вам необходимо перейти по данной ссылке:

http://moschip.ru/get-element

Вы можете разместить у нас заказ для любого Вашего проекта, будь то серийное производство или разработка единичного прибора.

В нашем ассортименте представлены ведущие мировые производители активных и пассивных электронных компонентов.

Нашей специализацией является поставка электронной компонентной базы двойного назначения, продукции таких производителей как XILINX, Intel (ex.ALTERA), Vicor, Microchip, Texas Instruments, Analog Devices, Mini-Circuits, Amphenol, Glenair.

Сотрудничество с глобальными дистрибьюторами электронных компонентов, предоставляет возможность заказывать и получать с международных складов практически любой перечень компонентов в оптимальные для Вас сроки.

На всех этапах разработки и производства наши партнеры могут получить квалифицированную поддержку опытных инженеров.

Система менеджмента качества компании отвечает требованиям в соответствии с ГОСТ Р ИСО 9001, ГОСТ РВ 0015-002 и ЭС РД 009

Офис по работе с юридическими лицами:

105318, г.Москва, ул.Щербаковская д.3, офис 1107, 1118, ДЦ «Щербаковский»

Телефон: +7 495 668-12-70 (многоканальный)

Факс: +7 495 668-12-70 (доб.304)

E-mail: info@moschip.ru

Skype отдела продаж:
moschip.ru
moschip.ru_4
moschip.ru_6
moschip.ru_9