# Type 101C –55 °C to 105 °C Low-ESR, Wide-Temperature Grade

**The Ultimate in Cold Performance and ESR**

The Type 101C is the wide-temperature, low voltage version of the Type 550C. It is ideal for high-ripple current military and industrial applications that need full performance to –40 ºC and solid performance to –55 ºC. It also excels as apower-supply output capacitor because of its exceptionally low ESR. The extended cathode foil of the 101C assures heat flow from the capacitor element to the can in all mounting orientations.

## Highlights

- 5,000 hour load life
- Ripple Current to > 100 amps @ 55 °C
- ESRs to 2.5 mΩ
- > 90% capacitance at –40 ºC
- Thermal-Pak™ extended cathode construction

## Specifications

**Operating Temperature:** –55 °C to +105 °C

**Rated Voltage:** 7.5 to 250 Vdc

**Capacitance:** 290 µF to 1.5 F

**Capacitance Tolerance:** 7.5 to 150 Vdc: –10% +75%, 200 & 250 Vdc: 10 +50%

**DCLeakage Current:** $\leq 1.5\sqrt{CV}$ µA (4mA max. 5 minutes)

**Cold Impedence:** –55 °C multiple of 25 °C Z ≤ 3

**Ripple Current Multipliers:**

**Ambient Temperature**

| 45 °C | 55 °C | 65 °C | 75 °C | 85 °C | 95 ºC | 105 ºC |
|---|---|---|---|---|---|---|
| 1.66 | 1.52 | 1.37 | 1.20 | 1.00 | 0.75 | 0.36 |

**Frequency**

| | 50 Hz | 60 Hz | 120 Hz | 360 Hz | 1 kHz | 5 kHz | 10 kHz & up |
|---|---|---|---|---|---|---|---|
| **1 3/8" & 1 3/4" Diameters** | | | | | | | |
| **7.5 to 150 V** | 0.91 | 0.93 | 1.00 | 1.06 | 1.08 | 1.09 | 1.09 |
| **200 & 250 V** | 0.82 | 0.86 | 1.00 | 1.14 | 1.20 | 1.23 | 1.23 |
| **2" & 2 1/2" Diameters** | | | | | | | |
| **7.5 to 150 V** | 0.92 | 0.94 | 1.00 | 1.05 | 1.07 | 1.08 | 1.08 |
| **200 & 250 V** | 0.82 | 0.86 | 1.00 | 1.14 | 1.20 | 1.23 | 1.27 |
| **3" Diameters** | | | | | | | |
| **7.5 to 150 V** | 0.95 | 0.96 | 1.00 | 1.03 | 1.04 | 1.05 | 1.05 |
| **200 & 250 V** | 0.85 | 0.88 | 1.00 | 1.11 | 1.15 | 1.18 | 1.18 |

RoHS Compliant

Complies with the EU Directive 2002/95/EC requirement restricting the use of Lead (Pb), Mercury (Hg), Cadmium (Cd), Hexavalent chromium (Cr(VI)), PolyBrominated Biphenyls (PBB) and PolyBrominated Diphenyl Ethers (PBDE).

**EIA Ripple Life:** 5,000 h at full load @ 85 °C per EIA IS-749
ΔCapacitance ±20%
ESR 200% of limit
DCL 100% of limit

**Life Test:** 2,000 h at 105 °C and rated voltage
ΔCapacitance ±20%
ESR 200% of limit
DCL 100% of limit

**Shelf Life:** 500 h @ 105 °C, Capacitance, ESR and DCL, initial requirements.

**Vibration:** 10 to 55 Hz, 0.06" and 10 g max, 1.5 h ea. of 2 axis

# Type 101C –55 °C to 105 °C Low-ESR, Wide-Temperature Grade

## Outline Drawing

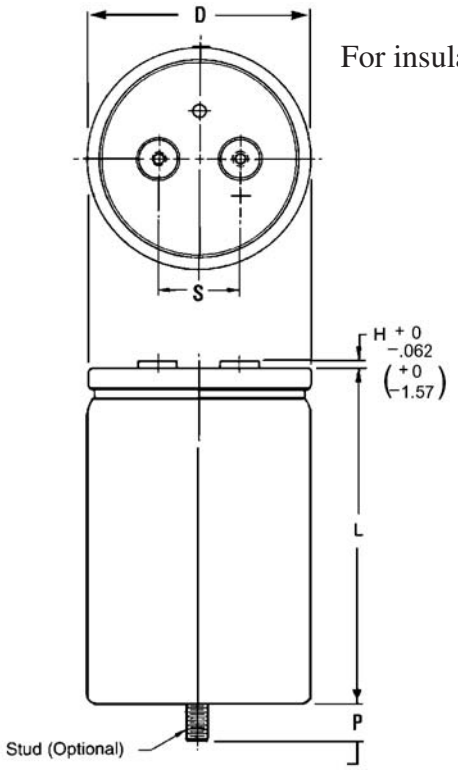


NOTE:With the stud-mount feature, a thermally-conductive disk can be inserted in the bottom flush with the outer insulating sleeve. This reduces the thermal resistance through the can bottom by 0.3 °C/W. Can Style P.

## Case Dimensions

### Uninsulated Case Dimensions

For insulated case, add 0.024”(0.610 mm) to “D”and 0.030”(0.762 mm) to height.

| Case Code | Diam. (D) ±.031 Inches | Diam. (D) ±.78 mm | Length (L) ±.062 Inches | Length (L) ±1.57 mm | Terminals (S) ±0.015 Inches | Terminals (S) ±.38 mm | Typical Weight oz | Typical Weight g |
|---|---|---|---|---|---|---|---|---|
| AK | 1.375 | 34.93 | 1.625 | 41.28 | 0.50 | 12.70 | 1.9 | 54 |
| AA | 1.375 | 34.93 | 2.125 | 53.98 | 0.50 | 12.70 | 2.0 | 57 |
| AH | 1.375 | 34.93 | 2.625 | 66.68 | 0.50 | 12.70 | 2.7 | 77 |
| AB | 1.375 | 34.93 | 3.125 | 79.38 | 0.50 | 12.70 | 3.3 | 94 |
| AJ | 1.375 | 34.93 | 3.625 | 92.08 | 0.50 | 12.70 | 3.8 | 108 |
| AC | 1.375 | 34.93 | 4.125 | 104.78 | 0.50 | 12.70 | 4.4 | 125 |
| AD | 1.375 | 34.93 | 4.625 | 117.48 | 0.50 | 12.70 | 5.1 | 145 |
| AE | 1.375 | 34.93 | 5.125 | 130.18 | 0.50 | 12.70 | 6.8 | 193 |
| AF | 1.375 | 34.93 | 5.625 | 142.88 | 0.50 | 12.70 | 8.1 | 230 |
| EA | 1.750 | 44.45 | 2.125 | 53.98 | 0.75 | 19.05 | 2.7 | 76 |
| EH | 1.750 | 44.45 | 2.625 | 66.68 | 0.75 | 19.05 | 3.8 | 108 |
| EB | 1.750 | 44.45 | 3.125 | 79.38 | 0.75 | 19.05 | 5.1 | 145 |
| EJ | 1.750 | 44.45 | 3.625 | 92.08 | 0.75 | 19.05 | 6.8 | 193 |
| EC | 1.750 | 44.45 | 4.125 | 104.78 | 0.75 | 19.05 | 8.1 | 230 |
| ED | 1.750 | 44.45 | 4.625 | 117.48 | 0.75 | 19.05 | 9.0 | 255 |
| EE | 1.750 | 44.45 | 5.125 | 130.18 | 0.75 | 19.05 | 9.5 | 269 |
| EF | 1.750 | 44.45 | 5.625 | 142.88 | 0.75 | 19.05 | 10.5 | 298 |
| BA | 2.000 | 50.80 | 2.125 | 53.98 | 0.75 | 22.23 | 5.4 | 153 |
| BH | 2.000 | 50.80 | 2.625 | 66.68 | 0.75 | 22.23 | 6.1 | 173 |
| BB | 2.000 | 50.80 | 3.125 | 79.38 | 0.75 | 22.23 | 6.8 | 193 |
| BJ | 2.000 | 50.80 | 3.625 | 92.08 | 0.75 | 22.23 | 8.2 | 232 |
| BC | 2.000 | 50.80 | 4.125 | 104.78 | 0.75 | 22.23 | 9.5 | 269 |
| BD | 2.000 | 50.80 | 4.625 | 117.48 | 0.75 | 22.23 | 10.3 | 292 |
| BE | 2.000 | 50.80 | 5.125 | 130.18 | 0.75 | 22.23 | 10.7 | 303 |
| BF | 2.000 | 50.80 | 5.625 | 142.88 | 0.75 | 22.23 | 13.0 | 369 |
| CH | 2.500 | 63.50 | 2.625 | 66.68 | 1.25 | 28.58 | 9.2 | 261 |
| CB | 2.500 | 63.50 | 3.125 | 79.38 | 1.25 | 28.58 | 10.4 | 295 |
| CJ | 2.500 | 63.50 | 3.625 | 92.08 | 1.25 | 28.58 | 12.7 | 361 |
| CC | 2.500 | 63.50 | 4.125 | 104.78 | 1.25 | 28.58 | 15.0 | 425 |
| CD | 2.500 | 63.50 | 4.625 | 117.48 | 1.25 | 28.58 | 17.2 | 488 |
| CE | 2.500 | 63.50 | 5.125 | 130.18 | 1.25 | 28.58 | 19.3 | 547 |
| CF | 2.500 | 63.50 | 5.625 | 142.88 | 1.25 | 28.58 | 21.4 | 607 |
| DB | 3.000 | 76.20 | 3.125 | 79.38 | 1.25 | 31.75 | 16.7 | 473 |
| DJ | 3.000 | 76.20 | 3.625 | 92.08 | 1.25 | 31.75 | 20.0 | 567 |
| DC | 3.000 | 76.20 | 4.125 | 104.78 | 1.25 | 31.75 | 22.2 | 629 |
| DD | 3.000 | 76.20 | 4.625 | 117.48 | 1.25 | 31.75 | 25.5 | 723 |
| DE | 3.000 | 76.20 | 5.125 | 130.18 | 1.25 | 31.75 | 30.0 | 850 |
| DF | 3.000 | 76.20 | 5.625 | 142.88 | 1.25 | 31.75 | 31.9 | 904 |
| DP | 3.000 | 76.20 | 5.875 | 149.23 | 1.25 | 31.75 | 32.8 | 931 |
| DN | 3.000 | 76.20 | 7.625 | 193.68 | 1.25 | 31.75 | 39.5 | 1119 |
| DG | 3.000 | 76.20 | 8.625 | 219.08 | 1.25 | 31.75 | 43.3 | 1227 |

## Stud Dimensions

| Case Diam. | Stud Thread | P±0.039” (±1.0 mm) |
|---|---|---|
| 1.38 | M8 | 0.470” (12.0) |
| 1.75 | M8 | 0.470” (12.0) |
| 2.00 | M12 | 0.630” (16.0) |
| 2.50 | M12 | 0.630” (16.0) |
| 3.00 | M12 | 0.630” (16.0) |

## Terminal Dimensions

| Terminal Style | For Case Diameters | Code | Post Diameter in | Post Diameter mm | H max in | H max mm | Thread | min Full Thread in | min Full Thread mm | Torque in·lb | Torque N·m |
|---|---|---|---|---|---|---|---|---|---|---|---|
| Low Post | 1⅜ to 3 | A | 0.314 | 8.0 | 0.094 | 2.4 | 10–32 | 0.218 | 5.5 | 25 | 2.82 |
| High Post | 1⅜ to 3 | B | 0.314 | 8.0 | 0.281 | 7.1 | 10–32 | 0.375 | 9.5 | 25 | 2.82 |
| High Current, Med | 2½ & 3 | D | 0.434 | 11.0 | 0.190 | 4.8 | ¼–28 | 0.312 | 7.9 | 50 | 5.65 |

Click here to see Hardware & Mounting Options

# Type 101C –55 °C to 105 °C Low-ESR, Wide-Temperature Grade

## Part Numbering System

| 101C | 183 | T | 250 | DG | 2 | D | S |
|---|---|---|---|---|---|---|---|
| **Type** | **Capacitance** | **Tolerance** | **Voltage** | **Case Code** | **Insulation** | **Terminal** | **Can Style** |
| | **100** = 10 µF<br>**101** = 100 µF<br>**183** = 18,000 µF | **M** = ±20%<br>**U** = –10%+75%<br>**T** = –10%+50% | **7R5** = 7.5 Vdc<br>**063** = 63 Vdc<br>**100** = 100 Vdc | | **0**= None<br>**1**= Polyester<br>**2**= PVC | **A** = Low Post<br>**B** = High Post<br>**D** = High Current | **Blank**= Standard Can<br>**S**= Stud Bottom<br>**P**= Stud with Thermal Pad |

Standard insulation is 0.008-in PVC sleeve with 0.01-in polypropylene end disk.

## Typical Performance Curves

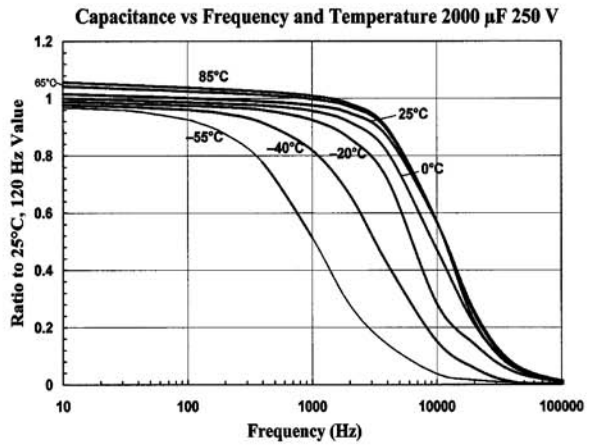


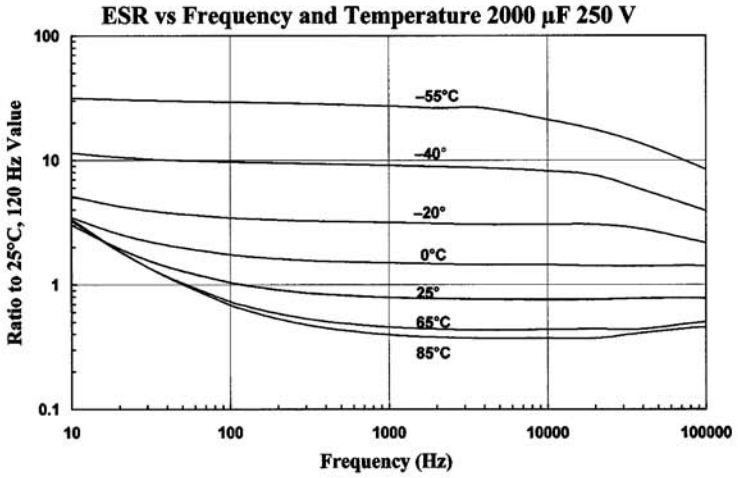


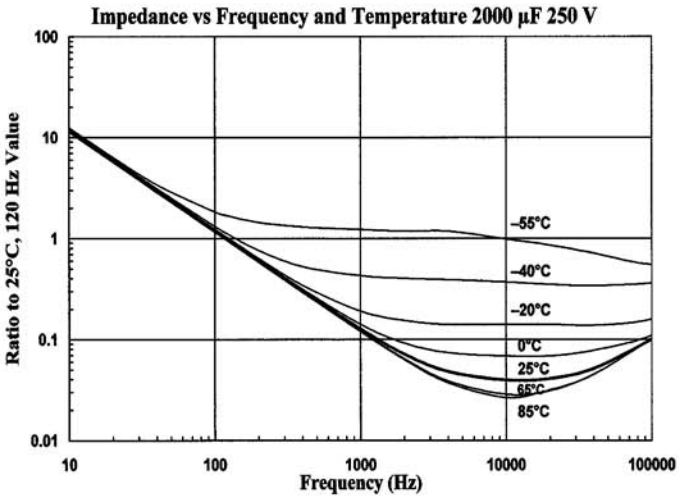


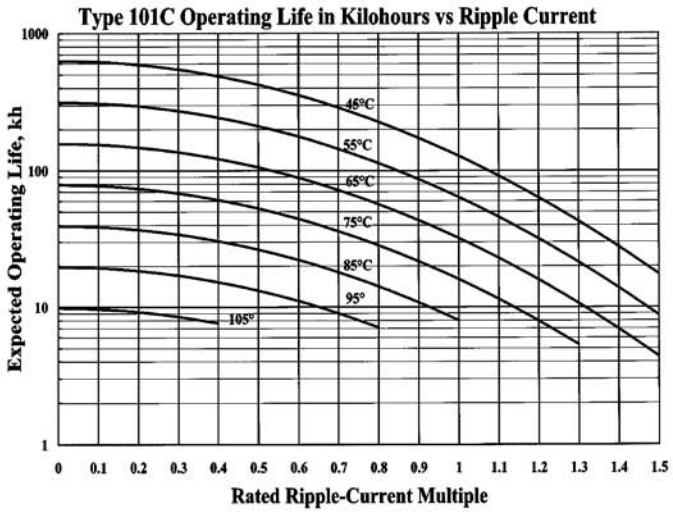

# Type 101C –55 °C to 105 °C Low-ESR, Wide-Temperature Grade

## Ratings

| Cap. (µF) | Catalog Part Number | ESR Max. @ 25 °C 120 Hz (mΩ) | Ripple Max. @ 85°C 120 Hz (A) | Nominal Size D x L (inches) |
|---|---|---|---|---|
| **7.5 Vdc (10 Vdc Surge)** | | | | |
| 28000 | 101C283U7R5AK2B | 38.2 | 6.1 | 1 3/8 x 1 5/8 |
| 47000 | 101C473U7R5AA2B | 25.0 | 8.7 | 1 3/8 x 2 1/8 |
| 66000 | 101C663U7R5AH2B | 19.0 | 11.4 | 1 3/8 x 2 5/8 |
| 79000 | 101C793U7R5BA2B | 18.3 | 14.0 | 2 x 2 1/8 |
| 84000 | 101C843U7R5EA2B | 22.6 | 11.6 | 1 3/4 x 2 1/8 |
| 84000 | 101C843U7R5AB2B | 15.4 | 13.8 | 1 3/8 x 3 1/8 |
| 100000 | 101C104U7R5AJ2B | 13.2 | 15.9 | 1 3/8 x 3 5/8 |
| 120000 | 101C124U7R5EH2B | 16.5 | 14.7 | 1 3/4 x 2 5/8 |
| 120000 | 101C124U7R5BH2B | 12.4 | 18.3 | 2 x 2 5/8 |
| 120000 | 101C124U7R5AC2B | 12.1 | 17.4 | 1 3/8 x 4 1/8 |
| 140000 | 101C144U7R5AD2B | 10.8 | 19.2 | 1 3/8 x 4 5/8 |
| 160000 | 101C164U7R5EB2B | 13.2 | 17.5 | 1 3/4 x 3 1/8 |
| 160000 | 101C164U7R5AE2B | 9.9 | 20.9 | 1 3/8 x 5 1/8 |
| 170000 | 101C174U7R5BB2B | 8.5 | 23.6 | 2 x 3 1/8 |
| 180000 | 101C184U7R5AF2B | 9.1 | 22.6 | 1 3/8 x 5 5/8 |
| 200000 | 101C204U7R5EJ2B | 11.1 | 20.1 | 1 3/4 x 3 5/8 |
| 210000 | 101C214U7R5CH2B | 9.4 | 24.2 | 2 1/2 x 2 5/8 |
| 220000 | 101C224U7R5EC2B | 8.2 | 24.4 | 1 3/4 x 4 1/8 |
| 220000 | 101C224U7R5BJ2B | 7.6 | 26.2 | 2 x 3 5/8 |
| 260000 | 101C264U7R5BC2B | 6.0 | 31.0 | 2 x 4 1/8 |
| 270000 | 101C274U7R5ED2B | 8.7 | 24.7 | 1 3/4 x 4 5/8 |
| 280000 | 101C284U7R5CB2B | 7.2 | 29.4 | 2 1/2 x 3 1/8 |
| 300000 | 101C304U7R5BD2B | 5.7 | 32.9 | 2 x 4 5/8 |
| 310000 | 101C314U7R5EE2B | 7.9 | 26.8 | 1 3/4 x 5 1/8 |
| 350000 | 101C354U7R5EF2B | 7.4 | 28.8 | 1 3/4 x 5 5/8 |
| 350000 | 101C354U7R5BE2B | 5.2 | 35.9 | 2 x 5 1/8 |
| 360000 | 101C364U7R5CJ2D | 5.9 | 34.2 | 2 1/2 x 3 5/8 |
| 390000 | 101C394U7R5DB2D | 7.1 | 33.1 | 3 x 3 1/8 |
| 390000 | 101C394U7R5BF2B | 4.9 | 38.2 | 2 x 5 5/8 |
| 430000 | 101C434U7R5CC2D | 4.2 | 42.4 | 2 1/2 x 4 1/8 |
| 490000 | 101C494U7R5DJ2D | 5.8 | 38.5 | 3 x 3 5/8 |
| 490000 | 101C494U7R5CD2D | 4.4 | 42.8 | 2 1/2 x 4 5/8 |
| 570000 | 101C574U7R5CE2D | 4.0 | 46.7 | 2 1/2 x 5 1/8 |
| 610000 | 101C614U7R5DC2D | 4.6 | 45.2 | 3 x 4 1/8 |
| 640000 | 101C644U7R5CF2D | 3.4 | 52.1 | 2 1/2 x 5 5/8 |
| 700000 | 101C704U7R5DD2D | 4.0 | 50.0 | 3 x 4 5/8 |
| 810000 | 101C814U7R5DE2D | 3.7 | 53.6 | 3 x 5 1/8 |
| 910000 | 101C914U7R5DF2D | 3.4 | 57.8 | 3 x 5 5/8 |
| 960000 | 101C964U7R5DP2D | 3.4 | 58.8 | 3 x 5 7/8 |
| 1300000 | 101C135U7R5DN2D | 2.8 | 70.2 | 3 x 7 5/8 |
| 1500000 | 101C155U7R5DG2D | 2.5 | 76.4 | 3 x 8 5/8 |
| **10 Vdc (15 Vdc Surge)** | | | | |
| 25000 | 101C253U010AK2B | 36.0 | 6.2 | 1 3/8 x 1 5/8 |
| 41000 | 101C413U010AA2B | 23.9 | 8.9 | 1 3/8 x 2 1/8 |
| 58000 | 101C583U010AH2B | 18.1 | 11.7 | 1 3/8 x 2 5/8 |
| 68000 | 101C683U010BA2B | 17.8 | 14.2 | 2 x 2 1/8 |
| 69000 | 101C693U010EA2B | 22.8 | 11.6 | 1 3/4 x 2 1/8 |
| 74000 | 101C743U010AB2B | 14.6 | 14.2 | 1 3/8 x 3 1/8 |
| 89000 | 101C893U010AJ2B | 12.5 | 16.4 | 1 3/8 x 3 5/8 |
| 99000 | 101C993U010EH2B | 16.6 | 14.6 | 1 3/4 x 2 5/8 |
| 110000 | 101C114U010BH2B | 12.1 | 18.6 | 2 x 2 5/8 |
| 110000 | 101C114U010AC2B | 11.3 | 18.1 | 1 3/8 x 4 1/8 |
| 120000 | 101C124U010AD2B | 10.3 | 19.7 | 1 3/8 x 4 5/8 |
| 130000 | 101C134U010EB2B | 13.2 | 17.4 | 1 3/4 x 3 1/8 |
| 140000 | 101C144U010AE2B | 9.4 | 21.4 | 1 3/8 x 5 1/8 |
| 150000 | 101C154U010BB2B | 8.1 | 24.2 | 2 x 3 1/8 |
| 160000 | 101C164U010EJ2B | 11.1 | 20.0 | 1 3/4 x 3 5/8 |
| 160000 | 101C164U010AF2B | 8.7 | 23.1 | 1 3/8 x 5 5/8 |
| 180000 | 101C184U010CH2B | 9.2 | 24.5 | 2 1/2 x 2 5/8 |
| 180000 | 101C184U010BJ2B | 7.4 | 26.5 | 2 x 3 5/8 |
| 190000 | 101C194U010EC2B | 8.2 | 24.4 | 1 3/4 x 4 1/8 |
| 220000 | 101C224U010ED2B | 8.7 | 24.7 | 1 3/4 x 4 5/8 |
| 230000 | 101C234U010BC2B | 5.7 | 31.7 | 2 x 4 1/8 |
| 240000 | 101C244U010CB2B | 7.0 | 29.7 | 2 1/2 x 3 1/8 |
| 250000 | 101C254U010EE2B | 8.0 | 26.7 | 1 3/4 x 5 1/8 |
| 260000 | 101C264U010BD2B | 5.5 | 33.5 | 2 x 4 5/8 |
| 280000 | 101C284U010EF2B | 7.4 | 28.7 | 1 3/4 x 5 5/8 |
| 300000 | 101C304U010CJ2D | 5.7 | 34.6 | 2 1/2 x 3 5/8 |
| 300000 | 101C304U010BE2B | 5.0 | 36.5 | 2 x 5 1/8 |
| 340000 | 101C344U010BF2B | 4.7 | 38.9 | 2 x 5 5/8 |
| 360000 | 101C364U010DB2D | 7.0 | 33.4 | 3 x 3 1/8 |
| 370000 | 101C374U010CC2D | 4.0 | 43.0 | 2 1/2 x 4 1/8 |
| 430000 | 101C434U010CD2D | 4.3 | 43.5 | 2 1/2 x 4 5/8 |
| 450000 | 101C454U010DJ2D | 5.7 | 38.8 | 3 x 3 5/8 |
| 500000 | 101C504U010CE2D | 3.8 | 47.5 | 2 1/2 x 5 1/8 |
| 550000 | 101C554U010DC2D | 4.5 | 45.5 | 3 x 4 1/8 |
| 560000 | 101C564U010CF2D | 3.3 | 53.0 | 2 1/2 x 5 5/8 |
| 640000 | 101C644U010DD2D | 4.0 | 50.4 | 3 x 4 5/8 |
| 740000 | 101C744U010DE2D | 3.7 | 54.0 | 3 x 5 1/8 |
| 840000 | 101C844U010DF2D | 3.3 | 58.2 | 3 x 5 5/8 |
| 880000 | 101C884U010DP2D | 3.3 | 59.2 | 3 x 5 7/8 |
| 1200000 | 101C125U010DN2D | 2.8 | 70.7 | 3 x 7 5/8 |
| 1400000 | 101C145U010DG2D | 2.5 | 76.9 | 3 x 8 5/8 |
| **16 Vdc (25 Vdc Surge)** | | | | |
| 16000 | 101C163U016AK2B | 39.2 | 6.0 | 1 3/8 x 1 5/8 |
| 27000 | 101C273U016AA2B | 26.0 | 8.5 | 1 3/8 x 2 1/8 |
| 38000 | 101C383U016AH2B | 20.0 | 11.1 | 1 3/8 x 2 5/8 |
| 45000 | 101C453U016BA2B | 19.1 | 13.7 | 2 x 2 1/8 |
| 46000 | 101C463U016EA2B | 24.3 | 11.2 | 1 3/4 x 2 1/8 |
| 49000 | 101C493U016AB2B | 15.9 | 13.6 | 1 3/8 x 3 1/8 |
| 59000 | 101C593U016AJ2B | 13.5 | 15.7 | 1 3/8 x 3 5/8 |
| 66000 | 101C663U016EH2B | 17.7 | 14.2 | 1 3/4 x 2 5/8 |
| 71000 | 101C713U016BH2B | 13.0 | 18.0 | 2 x 2 5/8 |
| 73000 | 101C733U016AC2B | 12.2 | 17.4 | 1 3/8 x 4 1/8 |
| 82000 | 101C823U016AD2B | 11.1 | 19.0 | 1 3/8 x 4 5/8 |

# Type 101C –55 °C to 105 °C Low-ESR, Wide-Temperature Grade

| Cap. (µF) | Catalog Part Number | ESR Max. @ 25 °C 120 Hz (mΩ) | Ripple Max. @ 85°C 120 Hz (A) | Nominal Size D x L (inches) |
|---|---|---|---|---|
| 86000 | 101C863U016EB2B | 14.1 | 16.9 | 1 3/4 x 3 1/8 |
| 93000 | 101C933U016AE2B | 10.1 | 20.6 | 1 3/8 x 5 1/8 |
| 100000 | 101C104U016BB2B | 8.6 | 23.4 | 2 x 3 1/8 |
| 110000 | 101C114U016EJ2B | 11.8 | 19.4 | 1 3/4 x 3 5/8 |
| 110000 | 101C114U016AF2B | 9.3 | 22.3 | 1 3/8 x 5 5/8 |
| 120000 | 101C124U016CH2B | 9.8 | 23.7 | 2 1/2 x 2 5/8 |
| 120000 | 101C124U016BJ2B | 8.0 | 25.7 | 2 x 3 5/8 |
| 130000 | 101C134U016EC2B | 8.6 | 23.8 | 1 3/4 x 4 1/8 |
| 150000 | 101C154U016ED2B | 9.2 | 24.0 | 1 3/4 x 4 5/8 |
| 160000 | 101C164U016CB2B | 7.5 | 28.9 | 2 1/2 x 3 1/8 |
| 160000 | 101C164U016BC2B | 6.0 | 30.9 | 2 x 4 1/8 |
| 170000 | 101C174U016EE2B | 8.4 | 26.0 | 1 3/4 x 5 1/8 |
| 170000 | 101C174U016BD2B | 5.9 | 32.5 | 2 x 4 5/8 |
| 190000 | 101C194U016EF2B | 7.8 | 28.0 | 1 3/4 x 5 5/8 |
| 200000 | 101C204U016CJ2D | 6.1 | 33.6 | 2 1/2 x 3 5/8 |
| 200000 | 101C204U016BE2B | 5.3 | 35.4 | 2 x 5 1/8 |
| 230000 | 101C234U016BF2B | 4.9 | 38.0 | 2 x 5 5/8 |
| 240000 | 101C244U016DB2D | 7.3 | 32.7 | 3 x 3 1/8 |
| 250000 | 101C254U016CC2D | 4.3 | 41.9 | 2 1/2 x 4 1/8 |
| 290000 | 101C294U016CD2D | 4.5 | 42.3 | 2 1/2 x 4 5/8 |
| 300000 | 101C304U016DJ2D | 5.9 | 38.1 | 3 x 3 5/8 |
| 330000 | 101C334U016CE2D | 4.0 | 46.2 | 2 1/2 x 5 1/8 |
| 360000 | 101C364U016DC2D | 4.7 | 44.6 | 3 x 4 1/8 |
| 370000 | 101C374U016CF2D | 3.4 | 51.6 | 2 1/2 x 5 5/8 |
| 430000 | 101C434U016DD2D | 4.1 | 49.5 | 3 x 4 5/8 |
| 490000 | 101C494U016DE2D | 3.8 | 53.0 | 3 x 5 1/8 |
| 560000 | 101C564U016DF2D | 3.5 | 57.2 | 3 x 5 5/8 |
| 590000 | 101C594U016DP2D | 3.4 | 58.2 | 3 x 5 7/8 |
| 800000 | 101C804U016DN2D | 2.9 | 69.6 | 3 x 7 5/8 |
| 920000 | 101C924U016DG2D | 2.6 | 75.8 | 3 x 8 5/8 |
| **20 Vdc (30 Vdc Surge)** | | | | |
| 13000 | 101C133U020AK2B | 39.2 | 6.0 | 1 3/8 x 1 5/8 |
| 21000 | 101C213U020AA2B | 26.0 | 8.5 | 1 3/8 x 2 1/8 |
| 29000 | 101C293U020AH2B | 20.0 | 11.1 | 1 3/8 x 2 5/8 |
| 34000 | 101C343U020BA2B | 19.1 | 13.7 | 2 x 2 1/8 |
| 35000 | 101C353U020EA2B | 24.3 | 11.2 | 1 3/4 x 2 1/8 |
| 38000 | 101C383U020AB2B | 15.9 | 13.6 | 1 3/8 x 3 1/8 |
| 45000 | 101C453U020AJ2B | 13.5 | 15.7 | 1 3/8 x 3 5/8 |
| 50000 | 101C503U020EH2B | 17.7 | 14.2 | 1 3/4 x 2 5/8 |
| 54000 | 101C543U020BH2B | 13.0 | 18.0 | 2 x 2 5/8 |
| 55000 | 101C553U020AC2B | 12.2 | 17.4 | 1 3/8 x 4 1/8 |
| 62000 | 101C623U020AD2B | 11.1 | 19.0 | 1 3/8 x 4 5/8 |
| 66000 | 101C663U020EB2B | 14.1 | 16.9 | 1 3/4 x 3 1/8 |
| 71000 | 101C713U020AE2B | 10.1 | 20.6 | 1 3/8 x 5 1/8 |
| 77000 | 101C773U020BB2B | 8.6 | 23.4 | 2 x 3 1/8 |
| 80000 | 101C803U020AF2B | 9.3 | 22.3 | 1 3/8 x 5 5/8 |
| 81000 | 101C813U020EJ2B | 11.8 | 19.4 | 1 3/4 x 3 5/8 |
| 89000 | 101C893U020CH2B | 9.8 | 23.7 | 2 1/2 x 2 5/8 |

| Cap. (µF) | Catalog Part Number | ESR Max. @ 25 °C 120 Hz (mΩ) | Ripple Max. @ 85°C 120 Hz (A) | Nominal Size D x L (inches) |
|---|---|---|---|---|
| 94000 | 101C943U020BJ2B | 8.0 | 25.7 | 2 x 3 5/8 |
| 98000 | 101C983U020EC2B | 8.6 | 23.8 | 1 3/4 x 4 1/8 |
| 110000 | 101C114U020ED2B | 9.2 | 24.0 | 1 3/4 x 4 5/8 |
| 120000 | 101C124U020CB2B | 7.5 | 28.9 | 2 1/2 x 3 1/8 |
| 120000 | 101C124U020BC2B | 6.0 | 30.9 | 2 x 4 1/8 |
| 130000 | 101C134U020EE2B | 8.4 | 26.0 | 1 3/4 x 5 1/8 |
| 130000 | 101C134U020BD2B | 5.9 | 32.5 | 2 x 4 5/8 |
| 140000 | 101C144U020EF2B | 7.8 | 28.0 | 1 3/4 x 5 5/8 |
| 150000 | 101C154U020CJ2D | 6.1 | 33.6 | 2 1/2 x 3 5/8 |
| 150000 | 101C154U020BE2B | 5.3 | 35.4 | 2 x 5 1/8 |
| 180000 | 101C184U020DB2D | 7.3 | 32.7 | 3 x 3 1/8 |
| 180000 | 101C184U020BF2B | 4.9 | 38.0 | 2 x 5 5/8 |
| 190000 | 101C194U020CC2D | 4.3 | 41.9 | 2 1/2 x 4 1/8 |
| 220000 | 101C224U020CD2D | 4.5 | 42.3 | 2 1/2 x 4 5/8 |
| 230000 | 101C234U020DJ2D | 5.9 | 38.1 | 3 x 3 5/8 |
| 250000 | 101C254U020CE2D | 4.0 | 46.2 | 2 1/2 x 5 1/8 |
| 280000 | 101C284U020DC2D | 4.7 | 44.6 | 3 x 4 1/8 |
| 280000 | 101C284U020CF2D | 3.4 | 51.6 | 2 1/2 x 5 5/8 |
| 330000 | 101C334U020DD2D | 4.1 | 49.5 | 3 x 4 5/8 |
| 380000 | 101C384U020DE2D | 3.8 | 53.0 | 3 x 5 1/8 |
| 420000 | 101C424U020DF2D | 3.5 | 57.2 | 3 x 5 5/8 |
| 450000 | 101C454U020DP2D | 3.4 | 58.2 | 3 x 5 7/8 |
| 610000 | 101C614U020DN2D | 2.9 | 69.4 | 3 x 7 5/8 |
| 710000 | 101C714U020DG2D | 2.6 | 75.5 | 3 x 8 5/8 |
| **25 Vdc (40 Vdc Surge)** | | | | |
| 9900 | 101C992U025AK2B | 42.6 | 5.7 | 1 3/8 x 1 5/8 |
| 16000 | 101C163U025AA2B | 28.2 | 8.2 | 1 3/8 x 2 1/8 |
| 23000 | 101C233U025AH2B | 20.9 | 10.8 | 1 3/8 x 2 5/8 |
| 27000 | 101C273U025EA2B | 25.1 | 11.0 | 1 3/4 x 2 1/8 |
| 27000 | 101C273U025BA2B | 19.9 | 13.5 | 2 x 2 1/8 |
| 30000 | 101C303U025AB2B | 16.6 | 13.3 | 1 3/8 x 3 1/8 |
| 35000 | 101C353U025AJ2B | 14.2 | 15.4 | 1 3/8 x 3 5/8 |
| 39000 | 101C393U025EH2B | 18.3 | 13.9 | 1 3/4 x 2 5/8 |
| 42000 | 101C423U025BH2B | 13.5 | 17.6 | 2 x 2 5/8 |
| 43000 | 101C433U025AC2B | 12.7 | 17.0 | 1 3/8 x 4 1/8 |
| 49000 | 101C493U025AD2B | 11.6 | 18.6 | 1 3/8 x 4 5/8 |
| 52000 | 101C523U025EB2B | 14.5 | 16.6 | 1 3/4 x 3 1/8 |
| 56000 | 101C563U025AE2B | 10.6 | 20.2 | 1 3/8 x 5 1/8 |
| 60000 | 101C603U025BB2B | 9.0 | 22.9 | 2 x 3 1/8 |
| 63000 | 101C633U025AF2B | 9.7 | 21.9 | 1 3/8 x 5 5/8 |
| 64000 | 101C643U025EJ2B | 12.2 | 19.1 | 1 3/4 x 3 5/8 |
| 70000 | 101C703U025CH2B | 10.1 | 23.3 | 2 1/2 x 2 5/8 |
| 73000 | 101C733U025BJ2B | 8.3 | 25.2 | 2 x 3 5/8 |
| 77000 | 101C773U025EC2B | 9.9 | 22.2 | 1 3/4 x 4 1/8 |
| 88000 | 101C883U025ED2B | 9.5 | 23.6 | 1 3/4 x 4 5/8 |
| 90000 | 101C903U025BC2B | 6.4 | 30.0 | 2 x 4 1/8 |
| 95000 | 101C953U025CB2B | 7.7 | 28.4 | 2 1/2 x 3 1/8 |
| 100000 | 101C104U025EE2B | 8.6 | 25.7 | 1 3/4 x 5 1/8 |

# Type 101C –55 °C to 105 °C Low-ESR, Wide-Temperature Grade

| Cap. (µF) | Catalog Part Number | ESR Max. @ 25 °C 120 Hz (mΩ) | Ripple Max. @ 85°C 120 Hz (A) | Nominal Size D x L (inches) |
|---|---|---|---|---|
| 100000 | 101C104U025BD2B | 6.1 | 31.9 | 2 x 4 5/8 |
| 110000 | 101C114U025EF2B | 8.0 | 27.6 | 1 3/4 x 5 5/8 |
| 120000 | 101C124U025CJ2D | 6.3 | 33.1 | 2 1/2 x 3 5/8 |
| 120000 | 101C124U025BE2B | 5.5 | 34.8 | 2 x 5 1/8 |
| 140000 | 101C144U025DB2D | 7.4 | 32.4 | 3 x 3 1/8 |
| 140000 | 101C144U025BF2B | 5.1 | 37.4 | 2 x 5 5/8 |
| 150000 | 101C154U025CC2D | 4.5 | 40.6 | 2 1/2 x 4 1/8 |
| 170000 | 101C174U025CD2D | 4.7 | 41.6 | 2 1/2 x 4 5/8 |
| 180000 | 101C184U025DJ2D | 6.0 | 37.7 | 3 x 3 5/8 |
| 200000 | 101C204U025CE2D | 4.2 | 45.5 | 2 1/2 x 5 1/8 |
| 220000 | 101C224U025DC2D | 4.8 | 44.1 | 3 x 4 1/8 |
| 220000 | 101C224U025CF2D | 3.6 | 50.3 | 2 1/2 x 5 5/8 |
| 260000 | 101C264U025DD2D | 4.5 | 47.3 | 3 x 4 5/8 |
| 290000 | 101C294U025DE2D | 4.0 | 51.6 | 3 x 5 1/8 |
| 330000 | 101C334U025DF2D | 3.5 | 56.7 | 3 x 5 5/8 |
| 350000 | 101C354U025DP2D | 3.5 | 57.7 | 3 x 5 7/8 |
| 480000 | 101C484U025DN2D | 2.9 | 69.0 | 3 x 7 5/8 |
| 550000 | 101C554U025DG2D | 2.6 | 75.2 | 3 x 8 5/8 |
| **30 Vdc (45 Vdc Surge)** | | | | |
| 5400 | 101C542U030AK2B | 43.9 | 5.6 | 1 3/8 x 1 5/8 |
| 13000 | 101C133U030AA2B | 29.8 | 8.0 | 1 3/8 x 2 1/8 |
| 19000 | 101C193U030AH2B | 21.4 | 10.7 | 1 3/8 x 2 5/8 |
| 23000 | 101C233U030EA2B | 23.1 | 11.5 | 1 3/4 x 2 1/8 |
| 23000 | 101C233U030BA2B | 18.8 | 13.8 | 2 x 2 1/8 |
| 24000 | 101C243U030AB2B | 16.0 | 13.6 | 1 3/8 x 3 1/8 |
| 30000 | 101C303U030AJ2B | 14.1 | 15.4 | 1 3/8 x 3 5/8 |
| 33000 | 101C333U030EH2B | 16.9 | 14.5 | 1 3/4 x 2 5/8 |
| 36000 | 101C363U030AC2B | 13.0 | 16.8 | 1 3/8 x 4 1/8 |
| 36000 | 101C363U030BH2B | 12.8 | 18.1 | 2 x 2 5/8 |
| 41000 | 101C413U030AD2B | 11.6 | 18.6 | 1 3/8 x 4 5/8 |
| 44000 | 101C443U030EB2B | 13.4 | 17.3 | 1 3/4 x 3 1/8 |
| 47000 | 101C473U030AE2B | 10.6 | 20.2 | 1 3/8 x 5 1/8 |
| 49000 | 101C493U030BB2B | 8.7 | 23.3 | 2 x 3 1/8 |
| 53000 | 101C533U030AF2B | 9.8 | 21.8 | 1 3/8 x 5 5/8 |
| 54000 | 101C543U030EJ2B | 11.3 | 19.9 | 1 3/4 x 3 5/8 |
| 59000 | 101C593U030CH2B | 9.3 | 24.4 | 2 1/2 x 2 5/8 |
| 62000 | 101C623U030BJ2B | 7.8 | 25.8 | 2 x 3 5/8 |
| 64000 | 101C643U030EC2B | 9.2 | 23.0 | 1 3/4 x 4 1/8 |
| 75000 | 101C753U030ED2B | 8.4 | 25.1 | 1 3/4 x 4 5/8 |
| 75000 | 101C753U030BC2B | 6.3 | 30.1 | 2 x 4 1/8 |
| 81000 | 101C813U030CB2B | 7.1 | 29.7 | 2 1/2 x 3 1/8 |
| 85000 | 101C853U030EE2B | 7.9 | 26.9 | 1 3/4 x 5 1/8 |
| 88000 | 101C883U030BD2B | 5.8 | 32.7 | 2 x 4 5/8 |
| 95000 | 101C953U030EF2B | 7.5 | 28.5 | 1 3/4 x 5 5/8 |
| 100000 | 101C104U030CJ2D | 5.7 | 34.6 | 2 1/2 x 3 5/8 |
| 100000 | 101C104U030BE2B | 5.2 | 35.6 | 2 x 5 1/8 |
| 110000 | 101C114U030BF2B | 4.8 | 38.4 | 2 x 5 5/8 |
| 120000 | 101C124U030DB2D | 7.0 | 33.3 | 3 x 3 1/8 |
| 120000 | 101C124U030CC2D | 4.7 | 40.0 | 2 1/2 x 4 1/8 |
| 150000 | 101C154U030DJ2D | 5.7 | 38.7 | 3 x 3 5/8 |
| 150000 | 101C154U030CD2D | 4.3 | 43.4 | 2 1/2 x 4 5/8 |
| 170000 | 101C174U030CE2D | 3.8 | 47.4 | 2 1/2 x 5 1/8 |
| 180000 | 101C184U030DC2D | 4.8 | 43.9 | 3 x 4 1/8 |
| 190000 | 101C194U030CF2D | 3.5 | 51.2 | 2 1/2 x 5 5/8 |
| 220000 | 101C224U030DD2D | 4.3 | 48.5 | 3 x 4 5/8 |
| 250000 | 101C254U030DE2D | 3.8 | 52.8 | 3 x 5 1/8 |
| 280000 | 101C284U030DF2D | 3.5 | 56.9 | 3 x 5 5/8 |
| 300000 | 101C304U030DP2D | 3.4 | 58.8 | 3 x 5 7/8 |
| 410000 | 101C414U030DN2D | 2.9 | 69.5 | 3 x 7 5/8 |
| 470000 | 101C474U030DG2D | 2.6 | 75.8 | 3 x 8 5/8 |
| **40 Vdc (55 Vdc Surge)** | | | | |
| 5400 | 101C542U040AK2B | 47.6 | 5.4 | 1 3/8 x 1 5/8 |
| 9000 | 101C902U040AA2B | 32.3 | 7.6 | 1 3/8 x 2 1/8 |
| 13000 | 101C133U040AH2B | 23.1 | 10.3 | 1 3/8 x 2 5/8 |
| 16000 | 101C163U040EA2B | 26.6 | 10.7 | 1 3/4 x 2 1/8 |
| 16000 | 101C163U040BA2B | 21.2 | 13.0 | 2 x 2 1/8 |
| 17000 | 101C173U040AB2B | 17.3 | 13.1 | 1 3/8 x 3 1/8 |
| 21000 | 101C213U040AJ2B | 15.2 | 14.8 | 1 3/8 x 3 5/8 |
| 23000 | 101C233U040EH2B | 19.3 | 13.5 | 1 3/4 x 2 5/8 |
| 25000 | 101C253U040BH2B | 14.3 | 17.1 | 2 x 2 5/8 |
| 25000 | 101C253U040AC2B | 14.0 | 16.2 | 1 3/8 x 4 1/8 |
| 29000 | 101C293U040AD2B | 12.4 | 17.9 | 1 3/8 x 4 5/8 |
| 30000 | 101C303U040EB2B | 15.4 | 16.2 | 1 3/4 x 3 1/8 |
| 33000 | 101C333U040AE2B | 11.3 | 19.6 | 1 3/8 x 5 1/8 |
| 34000 | 101C343U040BB2B | 9.8 | 22.0 | 2 x 3 1/8 |
| 37000 | 101C373U040EJ2B | 12.9 | 18.6 | 1 3/4 x 3 5/8 |
| 37000 | 101C373U040AF2B | 10.4 | 21.1 | 1 3/8 x 5 5/8 |
| 41000 | 101C413U040CH2B | 10.7 | 22.7 | 2 1/2 x 2 5/8 |
| 43000 | 101C433U040BJ2B | 8.8 | 24.4 | 2 x 3 5/8 |
| 45000 | 101C453U040EC2B | 10.5 | 21.6 | 1 3/4 x 4 1/8 |
| 52000 | 101C523U040ED2B | 9.5 | 23.6 | 1 3/4 x 4 5/8 |
| 52000 | 101C523U040BC2B | 7.1 | 28.5 | 2 x 4 1/8 |
| 56000 | 101C563U040CB2B | 8.1 | 27.6 | 2 1/2 x 3 1/8 |
| 59000 | 101C593U040EE2B | 8.9 | 25.4 | 1 3/4 x 5 1/8 |
| 61000 | 101C613U040BD2B | 6.5 | 31.0 | 2 x 4 5/8 |
| 66000 | 101C663U040EF2B | 8.4 | 26.9 | 1 3/4 x 5 5/8 |
| 70000 | 101C703U040BE2B | 5.8 | 33.8 | 2 x 5 1/8 |
| 71000 | 101C713U040CJ2D | 6.6 | 32.2 | 2 1/2 x 3 5/8 |
| 79000 | 101C793U040BF2B | 5.3 | 36.5 | 2 x 5 5/8 |
| 83000 | 101C833U040DB2D | 8.6 | 30.1 | 3 x 3 1/8 |
| 86000 | 101C863U040CC2D | 5.4 | 37.3 | 2 1/2 x 4 1/8 |
| 100000 | 101C104U040CD2D | 4.9 | 40.6 | 2 1/2 x 4 5/8 |
| 110000 | 101C114U040DJ2D | 7.0 | 35.1 | 3 x 3 5/8 |
| 120000 | 101C124U040CE2D | 4.4 | 44.4 | 2 1/2 x 5 1/8 |
| 130000 | 101C134U040DC2D | 5.3 | 41.9 | 3 x 4 1/8 |
| 130000 | 101C134U040CF2D | 4.0 | 48.0 | 2 1/2 x 5 5/8 |

# Type 101C –55 °C to 105 °C Low-ESR, Wide-Temperature Grade

| Cap. (µF) | Catalog Part Number | ESR Max. @ 25 °C 120 Hz (mΩ) | Ripple Max. @ 85°C 120 Hz (A) | Nominal Size D x L (inches) |
|---|---|---|---|---|
| 150000 | 101C154U040DD2D | 5.2 | 44.0 | 3 x 4 5/8 |
| 170000 | 101C174U040DE2D | 4.6 | 48.1 | 3 x 5 1/8 |
| 190000 | 101C194U040DF2D | 4.2 | 51.9 | 3 x 5 5/8 |
| 210000 | 101C214U040DP2D | 4.0 | 53.8 | 3 x 5 7/8 |
| 280000 | 101C284U040DN2D | 3.4 | 63.9 | 3 x 7 5/8 |
| 330000 | 101C334U040DG2D | 3.0 | 69.9 | 3 x 8 5/8 |
| **50 Vdc (75 Vdc Surge)** | | | | |
| 3800 | 101C382U050AK2B | 48.4 | 5.4 | 1 3/8 x 1 5/8 |
| 7000 | 101C702U050AA2B | 30.8 | 7.8 | 1 3/8 x 2 1/8 |
| 10000 | 101C103U050AH2B | 22.0 | 10.5 | 1 3/8 x 2 5/8 |
| 12000 | 101C123U050EA2B | 26.5 | 10.7 | 1 3/4 x 2 1/8 |
| 12000 | 101C123U050BA2B | 20.8 | 13.2 | 2 x 2 1/8 |
| 13000 | 101C133U050AB2B | 17.5 | 13.0 | 1 3/8 x 3 1/8 |
| 16000 | 101C163U050AJ2B | 14.6 | 15.2 | 1 3/8 x 3 5/8 |
| 18000 | 101C183U050EH2B | 19.3 | 13.6 | 1 3/4 x 2 5/8 |
| 19000 | 101C193U050BH2B | 14.1 | 17.2 | 2 x 2 5/8 |
| 19000 | 101C193U050AC2B | 13.4 | 16.6 | 1 3/8 x 4 1/8 |
| 22000 | 101C223U050AD2B | 11.9 | 18.3 | 1 3/8 x 4 5/8 |
| 24000 | 101C243U050EB2B | 15.3 | 16.2 | 1 3/4 x 3 1/8 |
| 25000 | 101C253U050AE2B | 10.8 | 20.0 | 1 3/8 x 5 1/8 |
| 27000 | 101C273U050BB2B | 9.6 | 22.2 | 2 x 3 1/8 |
| 29000 | 101C293U050EJ2B | 12.8 | 18.6 | 1 3/4 x 3 5/8 |
| 29000 | 101C293U050AF2B | 10.0 | 21.5 | 1 3/8 x 5 5/8 |
| 32000 | 101C323U050CH2B | 9.6 | 24.0 | 2 1/2 x 2 5/8 |
| 34000 | 101C343U050BJ2B | 8.6 | 24.6 | 2 x 3 5/8 |
| 35000 | 101C353U050EC2B | 10.5 | 21.6 | 1 3/4 x 4 1/8 |
| 40000 | 101C403U050ED2B | 9.5 | 23.6 | 1 3/4 x 4 5/8 |
| 41000 | 101C413U050BC2B | 7.2 | 28.2 | 2 x 4 1/8 |
| 44000 | 101C443U050CB2B | 8.2 | 27.6 | 2 1/2 x 3 1/8 |
| 46000 | 101C463U050EE2B | 8.8 | 25.4 | 1 3/4 x 5 1/8 |
| 48000 | 101C483U050BD2B | 6.3 | 31.2 | 2 x 4 5/8 |
| 52000 | 101C523U050EF2B | 8.4 | 27.0 | 1 3/4 x 5 5/8 |
| 55000 | 101C553U050CJ2D | 6.6 | 32.2 | 2 1/2 x 3 5/8 |
| 55000 | 101C553U050BE2B | 5.7 | 34.1 | 2 x 5 1/8 |
| 62000 | 101C623U050BF2B | 5.2 | 36.8 | 2 x 5 5/8 |
| 65000 | 101C653U050DB2B | 8.9 | 29.5 | 3 x 3 1/8 |
| 67000 | 101C673U050CC2D | 5.4 | 37.3 | 2 1/2 x 4 1/8 |
| 79000 | 101C793U050CD2D | 4.9 | 40.5 | 2 1/2 x 4 5/8 |
| 83000 | 101C833U050DJ2D | 7.3 | 34.4 | 3 x 3 5/8 |
| 90000 | 101C903U050CE2D | 4.4 | 44.3 | 2 1/2 x 5 1/8 |
| 100000 | 101C104U050DC2D | 5.5 | 41.1 | 3 x 4 1/8 |
| 100000 | 101C104U050CF2D | 4.0 | 47.9 | 2 1/2 x 5 5/8 |
| 120000 | 101C124U050DD2D | 5.4 | 43.2 | 3 x 4 5/8 |
| 130000 | 101C134U050DE2D | 4.8 | 47.2 | 3 x 5 1/8 |
| 150000 | 101C154U050DF2D | 4.4 | 51.0 | 3 x 5 5/8 |
| 160000 | 101C164U050DP2D | 4.2 | 52.9 | 3 x 5 7/8 |
| 220000 | 101C224U050DN2D | 3.5 | 63.0 | 3 x 7 5/8 |
| 260000 | 101C264U050DG2D | 3.1 | 69.0 | 3 x 8 5/8 |

| Cap. (µF) | Catalog Part Number | ESR Max. @ 25 °C 120 Hz (mΩ) | Ripple Max. @ 85°C 120 Hz (A) | Nominal Size D x L (inches) |
|---|---|---|---|---|
| **63 Vdc (85 Vdc Surge)** | | | | |
| 2800 | 101C282U063AK2B | 57.9 | 4.9 | 1 3/8 x 1 5/8 |
| 5000 | 101C502U063AA2B | 35.5 | 7.3 | 1 3/8 x 2 1/8 |
| 7200 | 101C722U063AH2B | 25.8 | 9.8 | 1 3/8 x 2 5/8 |
| 8800 | 101C882U063BA2B | 22.8 | 12.6 | 2 x 2 1/8 |
| 8900 | 101C892U063EA2B | 28.0 | 10.4 | 1 3/4 x 2 1/8 |
| 9400 | 101C942U063AB2B | 20.4 | 12.0 | 1 3/8 x 3 1/8 |
| 12000 | 101C123U063AJ2B | 17.1 | 14.0 | 1 3/8 x 3 5/8 |
| 13000 | 101C133U063EH2B | 20.4 | 13.2 | 1 3/4 x 2 5/8 |
| 14000 | 101C143U063BH2B | 15.4 | 16.5 | 2 x 2 5/8 |
| 14000 | 101C143U063AC2B | 14.8 | 15.8 | 1 3/8 x 4 1/8 |
| 16000 | 101C163U063AD2B | 13.2 | 17.4 | 1 3/8 x 4 5/8 |
| 17000 | 101C173U063EB2B | 16.1 | 15.8 | 1 3/4 x 3 1/8 |
| 18000 | 101C183U063AE2B | 12.0 | 19.0 | 1 3/8 x 5 1/8 |
| 19000 | 101C193U063BB2B | 10.2 | 21.5 | 2 x 3 1/8 |
| 20000 | 101C203U063AF2B | 11.0 | 20.5 | 1 3/8 x 5 5/8 |
| 21000 | 101C213U063EJ2B | 13.5 | 18.2 | 1 3/4 x 3 5/8 |
| 23000 | 101C233U063CH2B | 11.3 | 22.1 | 2 1/2 x 2 5/8 |
| 24000 | 101C243U063BJ2B | 9.6 | 23.4 | 2 x 3 5/8 |
| 25000 | 101C253U063EC2B | 11.0 | 21.1 | 1 3/4 x 4 1/8 |
| 29000 | 101C293U063ED2B | 10.0 | 23.0 | 1 3/4 x 4 5/8 |
| 29000 | 101C293U063BC2B | 8.2 | 26.4 | 2 x 4 1/8 |
| 31000 | 101C313U063CB2B | 8.6 | 26.9 | 2 1/2 x 3 1/8 |
| 33000 | 101C333U063EE2B | 9.3 | 24.8 | 1 3/4 x 5 1/8 |
| 34000 | 101C343U063BD2B | 7.2 | 29.3 | 2 x 4 5/8 |
| 37000 | 101C373U063EF2B | 8.8 | 26.3 | 1 3/4 x 5 5/8 |
| 39000 | 101C393U063BE2B | 6.5 | 32.0 | 2 x 5 1/8 |
| 40000 | 101C403U063CJ2D | 7.0 | 31.4 | 2 1/2 x 3 5/8 |
| 44000 | 101C443U063BF2B | 5.9 | 34.6 | 2 x 5 5/8 |
| 47000 | 101C473U063DB2B | 9.3 | 29.0 | 3 x 3 1/8 |
| 48000 | 101C483U063CC2D | 5.6 | 36.4 | 2 1/2 x 4 1/8 |
| 56000 | 101C563U063CD2D | 5.2 | 39.5 | 2 1/2 x 4 5/8 |
| 59000 | 101C593U063DJ2D | 7.5 | 33.8 | 3 x 3 5/8 |
| 65000 | 101C653U063CE2D | 4.6 | 43.3 | 2 1/2 x 5 1/8 |
| 72000 | 101C723U063DC2D | 6.0 | 39.5 | 3 x 4 1/8 |
| 73000 | 101C733U063CF2D | 4.2 | 46.8 | 2 1/2 x 5 5/8 |
| 84000 | 101C843U063DD2D | 5.6 | 42.5 | 3 x 4 5/8 |
| 97000 | 101C973U063DE2D | 5.0 | 46.5 | 3 x 5 1/8 |
| 110000 | 101C114U063DF2D | 4.5 | 50.2 | 3 x 5 5/8 |
| 120000 | 101C124U063DP2D | 4.3 | 52.0 | 3 x 5 7/8 |
| 160000 | 101C164U063DN2D | 3.6 | 62.2 | 3 x 7 5/8 |
| 180000 | 101C184U063DG2D | 3.2 | 68.2 | 3 x 8 5/8 |
| **75 Vdc (100 Vdc Surge)** | | | | |
| 2100 | 101C212U075AK2B | 97.3 | 3.8 | 1 3/8 x 1 5/8 |
| 3600 | 101C362U075AA2B | 67.2 | 5.3 | 1 3/8 x 2 1/8 |
| 5200 | 101C522U075AH2B | 50.0 | 7.0 | 1 3/8 x 2 5/8 |
| 6400 | 101C642U075BA2B | 40.7 | 9.4 | 2 x 2 1/8 |
| 6500 | 101C652U075EA2B | 47.5 | 8.0 | 1 3/4 x 2 1/8 |

# Type 101C –55 °C to 105 °C Low-ESR, Wide-Temperature Grade

| Cap. (µF) | Catalog Part Number | ESR Max. @ 25 °C 120 Hz (mΩ) | Ripple Max. @ 85°C 120 Hz (A) | Nominal Size D x L (inches) |
|---|---|---|---|---|
| **75 Vdc (100 Vdc Surge)** | | | | |
| 6800 | 101C682U075AB2B | 39.3 | 8.7 | 1 3/8 x 3 1/8 |
| 8400 | 101C842U075AJ2B | 32.5 | 10.1 | 1 3/8 x 3 5/8 |
| 9400 | 101C942U075EH2B | 34.2 | 10.2 | 1 3/4 x 2 5/8 |
| 10000 | 101C103U075AC2B | 27.9 | 11.5 | 1 3/8 x 4 1/8 |
| 10000 | 101C103U075BH2B | 27.4 | 12.4 | 2 x 2 5/8 |
| 12000 | 101C123U075EB2B | 27.0 | 12.2 | 1 3/4 x 3 1/8 |
| 12000 | 101C123U075AD2B | 24.5 | 12.8 | 1 3/8 x 4 5/8 |
| 13000 | 101C133U075AE2B | 22.0 | 14.0 | 1 3/8 x 5 1/8 |
| 14000 | 101C143U075BB2B | 18.0 | 16.2 | 2 x 3 1/8 |
| 15000 | 101C153U075EJ2B | 22.4 | 14.1 | 1 3/4 x 3 5/8 |
| 15000 | 101C153U075AF2B | 20.0 | 15.2 | 1 3/8 x 5 5/8 |
| 17000 | 101C173U075CH2B | 18.9 | 17.1 | 2 1/2 x 2 5/8 |
| 17000 | 101C173U075BJ2B | 16.8 | 17.7 | 2 x 3 5/8 |
| 18000 | 101C183U075EC2B | 18.0 | 16.5 | 1 3/4 x 4 1/8 |
| 21000 | 101C213U075ED2B | 16.2 | 18.1 | 1 3/4 x 4 5/8 |
| 21000 | 101C213U075BC2B | 12.7 | 21.2 | 2 x 4 1/8 |
| 23000 | 101C233U075CB2B | 14.3 | 20.8 | 2 1/2 x 3 1/8 |
| 24000 | 101C243U075EE2B | 14.8 | 19.6 | 1 3/4 x 5 1/8 |
| 25000 | 101C253U075BD2B | 12.3 | 22.4 | 2 x 4 5/8 |
| 27000 | 101C273U075EF2B | 13.9 | 20.9 | 1 3/4 x 5 5/8 |
| 28000 | 101C283U075BE2B | 11.0 | 24.6 | 2 x 5 1/8 |
| 29000 | 101C293U075CJ2B | 11.5 | 24.4 | 2 1/2 x 3 5/8 |
| 32000 | 101C323U075BF2B | 9.9 | 26.7 | 2 x 5 5/8 |
| 34000 | 101C343U075DB2B | 13.3 | 24.2 | 3 x 3 1/8 |
| 35000 | 101C353U075CC2B | 8.7 | 29.4 | 2 1/2 x 4 1/8 |
| 41000 | 101C413U075CD2D | 8.4 | 30.9 | 2 1/2 x 4 5/8 |
| 43000 | 101C433U075DJ2B | 10.8 | 28.2 | 3 x 3 5/8 |
| 47000 | 101C473U075CE2D | 7.5 | 34.0 | 2 1/2 x 5 1/8 |
| 52000 | 101C523U075DC2D | 7.6 | 35.0 | 3 x 4 1/8 |
| 53000 | 101C533U075CF2D | 6.7 | 36.9 | 2 1/2 x 5 5/8 |
| 61000 | 101C613U075DD2D | 7.9 | 35.7 | 3 x 4 5/8 |
| 70000 | 101C703U075DE2D | 6.1 | 42.0 | 3 x 5 1/8 |
| 79000 | 101C793U075DF2D | 6.0 | 43.5 | 3 x 5 5/8 |
| 83000 | 101C833U075DP2D | 5.7 | 45.1 | 3 x 5 7/8 |
| 110000 | 101C114U075DN2D | 4.7 | 54.7 | 3 x 7 5/8 |
| 130000 | 101C134U075DG2D | 4.1 | 60.3 | 3 x 8 5/8 |
| **100 Vdc (150 Vdc Surge)** | | | | |
| 1300 | 101C132U100AK2B | 116.0 | 3.5 | 1 3/8 x 1 5/8 |
| 2300 | 101C232U100AA2B | 79.9 | 4.9 | 1 3/8 x 2 1/8 |
| 3400 | 101C342U100AH2B | 59.4 | 6.4 | 1 3/8 x 2 5/8 |
| 4100 | 101C412U100BA2B | 47.6 | 8.7 | 2 x 2 1/8 |
| 4200 | 101C422U100EA2B | 55.0 | 7.4 | 1 3/4 x 2 1/8 |
| 4400 | 101C442U100AB2B | 46.6 | 8.0 | 1 3/8 x 3 1/8 |
| 5400 | 101C542U100AJ2B | 38.5 | 9.3 | 1 3/8 x 3 5/8 |
| 6100 | 101C612U100EH2B | 39.6 | 9.5 | 1 3/4 x 2 5/8 |
| 6500 | 101C652U100AC2B | 32.9 | 10.6 | 1 3/8 x 4 1/8 |
| 6500 | 101C652U100BH2B | 32.0 | 11.4 | 2 x 2 5/8 |
| 7500 | 101C752U100AD2B | 28.9 | 11.8 | 1 3/8 x 4 5/8 |
| 7900 | 101C792U100EB2B | 31.1 | 11.4 | 1 3/4 x 3 1/8 |
| 8500 | 101C852U100AE2B | 25.8 | 12.9 | 1 3/8 x 5 1/8 |
| 8900 | 101C892U100BB2B | 21.0 | 15.0 | 2 x 3 1/8 |
| 9600 | 101C962U100AF2B | 23.4 | 14.1 | 1 3/8 x 5 5/8 |
| 9800 | 101C982U100EJ2B | 25.8 | 13.2 | 1 3/4 x 3 5/8 |
| 11000 | 101C113U100CH2B | 20.7 | 16.3 | 2 1/2 x 2 5/8 |
| 11000 | 101C113U100BJ2B | 19.5 | 16.4 | 2 x 3 5/8 |
| 12000 | 101C123U100EC2B | 20.7 | 15.4 | 1 3/4 x 4 1/8 |
| 14000 | 101C143U100ED2B | 18.6 | 16.9 | 1 3/4 x 4 5/8 |
| 14000 | 101C143U100BC2B | 14.8 | 19.7 | 2 x 4 1/8 |
| 15000 | 101C153U100EE2B | 17.0 | 18.3 | 1 3/4 x 5 1/8 |
| 15000 | 101C153U100CB2B | 16.5 | 19.4 | 2 1/2 x 3 1/8 |
| 16000 | 101C163U100BD2B | 14.3 | 20.8 | 2 x 4 5/8 |
| 17000 | 101C173U100EF2B | 15.9 | 19.6 | 1 3/4 x 5 5/8 |
| 18000 | 101C183U100BE2B | 12.7 | 22.9 | 2 x 5 1/8 |
| 19000 | 101C193U100CJ2B | 13.3 | 22.7 | 2 1/2 x 3 5/8 |
| 21000 | 101C213U100BF2B | 11.4 | 24.9 | 2 x 5 5/8 |
| 22000 | 101C223U100DB2B | 13.8 | 23.8 | 3 x 3 1/8 |
| 22000 | 101C223U100CC2B | 10.0 | 27.4 | 2 1/2 x 4 1/8 |
| 26000 | 101C263U100CD2B | 9.7 | 28.9 | 2 1/2 x 4 5/8 |
| 28000 | 101C283U100DJ2B | 11.2 | 27.7 | 3 x 3 5/8 |
| 30000 | 101C303U100CE2D | 8.6 | 31.7 | 2 1/2 x 5 1/8 |
| 34000 | 101C343U100DC2D | 8.5 | 33.2 | 3 x 4 1/8 |
| 34000 | 101C343U100CF2D | 7.7 | 34.5 | 2 1/2 x 5 5/8 |
| 39000 | 101C393U100DD2D | 7.9 | 35.7 | 3 x 4 5/8 |
| 45000 | 101C453U100DE2D | 6.5 | 40.5 | 3 x 5 1/8 |
| 51000 | 101C513U100DF2D | 6.0 | 43.5 | 3 x 5 5/8 |
| 54000 | 101C543U100DP2D | 6.0 | 44.1 | 3 x 5 7/8 |
| 74000 | 101C743U100DN2D | 4.8 | 54.0 | 3 x 7 5/8 |
| 85000 | 101C853U100DG2D | 4.2 | 59.2 | 3 x 8 5/8 |
| **150 Vdc (200 Vdc Surge)** | | | | |
| 490 | 101C491U150AK2B | 433.0 | 2.1 | 1 3/8 x 1 5/8 |
| 880 | 101C881U150AA2B | 241.0 | 3.1 | 1 3/8 x 2 1/8 |
| 1200 | 101C122U150EA2B | 199.0 | 3.9 | 1 3/4 x 2 1/8 |
| 1300 | 101C132U150AH2B | 163.0 | 4.0 | 1 3/8 x 2 5/8 |
| 1500 | 101C152U150BA2B | 159.0 | 4.8 | 2 x 2 1/8 |
| 1700 | 101C172U150AB2B | 125.0 | 4.9 | 1 3/8 x 3 1/8 |
| 1800 | 101C182U150EH2B | 133.0 | 5.2 | 1 3/4 x 2 5/8 |
| 1900 | 101C192U150AJ2B | 112.0 | 5.5 | 1 3/8 x 3 5/8 |
| 2300 | 101C232U150BH2B | 104.0 | 6.3 | 2 x 2 5/8 |
| 2500 | 101C252U150EB2B | 95.5 | 6.5 | 1 3/4 x 3 1/8 |
| 2500 | 101C252U150AC2B | 84.9 | 6.6 | 1 3/8 x 4 1/8 |
| 2700 | 101C272U150AD2B | 80.1 | 7.1 | 1 3/8 x 4 5/8 |
| 3100 | 101C312U150AE2B | 74.0 | 7.6 | 1 3/8 x 5 1/8 |
| 3200 | 101C322U150EJ2B | 74.6 | 7.7 | 1 3/4 x 3 5/8 |
| 3400 | 101C342U150BB2B | 54.6 | 9.3 | 2 x 3 1/8 |
| 3600 | 101C362U150AF2B | 66.3 | 8.4 | 1 3/8 x 5 5/8 |
| 3800 | 101C382U150CH2B | 62.8 | 9.4 | 2 1/2 x 2 5/8 |
| 4000 | 101C402U150BJ2B | 59.7 | 9.4 | 2 x 3 5/8 |
| 4400 | 101C442U150EC2B | 54.3 | 9.5 | 1 3/4 x 4 1/8 |
| 4500 | 101C452U150ED2B | 53.1 | 10.0 | 1 3/4 x 4 5/8 |
| 5200 | 101C522U150EE2B | 45.9 | 11.1 | 1 3/4 x 5 1/8 |

# Type 101C –55 °C to 105 °C Low-ESR, Wide-Temperature Grade

| Cap. (µF) | Catalog Part Number | ESR Max. @ 25 °C 120 Hz (mΩ) | Ripple Max. @ 85°C 120 Hz (A) | Nominal Size D x L (inches) |
|---|---|---|---|---|
| 5200 | 101C522U150CB2B | 45.9 | 11.6 | 2 1/2 x 3 1/8 |
| 5200 | 101C522U150BC2B | 45.0 | 11.3 | 2 x 4 1/8 |
| 5700 | 101C572U150BD2B | 41.9 | 12.2 | 2 x 4 5/8 |
| 5800 | 101C582U150EF2B | 41.2 | 12.2 | 1 3/4 x 5 5/8 |
| 6600 | 101C662U150BE2B | 36.2 | 13.6 | 2 x 5 1/8 |
| 6600 | 101C662U150CJ2B | 36.2 | 13.8 | 2 1/2 x 3 5/8 |
| 7800 | 101C782U150DB2B | 35.7 | 14.8 | 3 x 3 1/8 |
| 7900 | 101C792U150BF2B | 30.2 | 15.3 | 2 x 5 5/8 |
| 8500 | 101C852U150CC2B | 28.1 | 16.3 | 2 1/2 x 4 1/8 |
| 9400 | 101C942U150CD2B | 25.4 | 17.8 | 2 1/2 x 4 5/8 |
| 9900 | 101C992U150DJ2B | 28.1 | 17.5 | 3 x 3 5/8 |
| 11000 | 101C113U150CE2B | 21.7 | 19.9 | 2 1/2 x 5 1/8 |
| 12000 | 101C123U150DC2B | 23.2 | 20.1 | 3 x 4 1/8 |
| 13000 | 101C133U150CF2B | 18.4 | 22.3 | 2 1/2 x 5 5/8 |
| 14000 | 101C143U150DD2B | 19.9 | 22.5 | 3 x 4 5/8 |
| 16000 | 101C163U150DE2B | 17.4 | 24.8 | 3 x 5 1/8 |
| 18000 | 101C183U150DF2B | 15.5 | 27.1 | 3 x 5 5/8 |
| 19000 | 101C193U150DP2B | 14.7 | 28.2 | 3 x 5 7/8 |
| 26000 | 101C263U150DN2D | 11.3 | 35.7 | 3 x 7 5/8 |
| 30000 | 101C303U150DG2D | 9.3 | 40.0 | 3 x 8 5/8 |
| **200 Vdc (275 Vdc Surge)** | | | | |
| 380 | 101C381T200AK2B | 454.0 | 2.0 | 1 3/8 x 1 5/8 |
| 680 | 101C681T200AA2B | 254.0 | 3.0 | 1 3/8 x 2 1/8 |
| 890 | 101C891T200EA2B | 224.0 | 3.7 | 1 3/4 x 2 1/8 |
| 980 | 101C981T200AH2B | 176.0 | 3.9 | 1 3/8 x 2 5/8 |
| 1100 | 101C112T200BA2B | 181.0 | 4.5 | 2 x 2 1/8 |
| 1300 | 101C132T200AB2B | 133.0 | 4.8 | 1 3/8 x 3 1/8 |
| 1400 | 101C142T200EH2B | 142.0 | 5.0 | 1 3/4 x 2 5/8 |
| 1600 | 101C162T200AJ2B | 108.0 | 5.6 | 1 3/8 x 3 5/8 |
| 1800 | 101C182T200BH2B | 111.0 | 6.1 | 2 x 2 5/8 |
| 1900 | 101C192T200EB2B | 105.0 | 6.2 | 1 3/4 x 3 1/8 |
| 1900 | 101C192T200AC2B | 88.9 | 6.4 | 1 3/8 x 4 1/8 |
| 2200 | 101C222T200AD2B | 90.4 | 6.7 | 1 3/8 x 4 5/8 |
| 2400 | 101C242T200EJ2B | 82.9 | 7.3 | 1 3/4 x 3 5/8 |
| 2400 | 101C242T200BB2B | 82.9 | 7.5 | 2 x 3 1/8 |
| 2500 | 101C252T200AE2B | 79.6 | 7.4 | 1 3/8 x 5 1/8 |
| 2800 | 101C282T200AF2B | 71.0 | 8.1 | 1 3/8 x 5 5/8 |
| 3100 | 101C312T200BJ2B | 64.2 | 9.0 | 2 x 3 5/8 |
| 3400 | 101C342T200EC2B | 58.5 | 9.1 | 1 3/4 x 4 1/8 |
| 3500 | 101C352T200ED2B | 56.8 | 9.7 | 1 3/4 x 4 5/8 |
| 4000 | 101C402T200EE2B | 49.7 | 10.7 | 1 3/4 x 5 1/8 |
| 4000 | 101C402T200CB2B | 49.7 | 11.2 | 2 1/2 x 3 1/8 |
| 4000 | 101C402T200BC2B | 43.1 | 11.5 | 2 x 4 1/8 |
| 4400 | 101C442T200BD2B | 45.2 | 11.7 | 2 x 4 5/8 |
| 4500 | 101C452T200EF2B | 44.2 | 11.7 | 1 3/4 x 5 5/8 |
| 5000 | 101C502T200BE2B | 39.8 | 12.9 | 2 x 5 1/8 |
| 5100 | 101C512T200CJ2B | 39.0 | 13.3 | 2 1/2 x 3 5/8 |
| 6100 | 101C612T200BF2B | 32.6 | 14.7 | 2 x 5 5/8 |
| 6500 | 101C652T200CC2B | 26.3 | 16.9 | 2 1/2 x 4 1/8 |
| 7200 | 101C722T200CD2B | 27.6 | 17.1 | 2 1/2 x 4 5/8 |
| 7600 | 101C762T200DJ2B | 29.7 | 17.0 | 3 x 3 5/8 |

| Cap. (µF) | Catalog Part Number | ESR Max. @ 25 °C 120 Hz (mΩ) | Ripple Max. @ 85°C 120 Hz (A) | Nominal Size D x L (inches) |
|---|---|---|---|---|
| 8300 | 101C832T200CE2B | 24.0 | 19.0 | 2 1/2 x 5 1/8 |
| 9300 | 101C932T200DC2B | 21.4 | 20.9 | 3 x 4 1/8 |
| 10000 | 101C103T200CF2B | 21.2 | 20.8 | 2 1/2 x 5 5/8 |
| 11000 | 101C113T200DD2B | 20.5 | 22.1 | 3 x 4 5/8 |
| 13000 | 101C133T200DB2B | 17.8 | 20.9 | 3 x 3 1/8 |
| 13000 | 101C133T200DE2B | 17.8 | 24.5 | 3 x 5 1/8 |
| 14000 | 101C143T200DF2B | 16.9 | 25.9 | 3 x 5 5/8 |
| 15000 | 101C153T200DP2B | 15.9 | 27.1 | 3 x 5 7/8 |
| 20000 | 101C203T200DN2D | 12.5 | 33.9 | 3 x 7 5/8 |
| 23000 | 101C233T200DG2D | 10.4 | 37.8 | 3 x 8 5/8 |
| **250 Vdc (350 Vdc Surge)** | | | | |
| 290 | 101C291T250AK2B | 549.0 | 1.8 | 1 3/8 x 1 5/8 |
| 530 | 101C531T250AA2B | 300.0 | 2.7 | 1 3/8 x 2 1/8 |
| 700 | 101C701T250EA2B | 227.0 | 3.7 | 1 3/4 x 2 1/8 |
| 760 | 101C761T250AH2B | 209.0 | 3.5 | 1 3/8 x 2 5/8 |
| 890 | 101C891T250BA2B | 164.0 | 4.7 | 2 x 2 1/8 |
| 990 | 101C991T250AB2B | 161.0 | 4.3 | 1 3/8 x 3 1/8 |
| 1100 | 101C112T250EH2B | 145.0 | 5.0 | 1 3/4 x 2 5/8 |
| 1200 | 101C122T250AJ2B | 133.0 | 5.0 | 1 3/8 x 3 5/8 |
| 1400 | 101C142T250BH2B | 104.0 | 6.3 | 2 x 2 5/8 |
| 1500 | 101C152T250AC2B | 106.0 | 5.9 | 1 3/8 x 4 1/8 |
| 1500 | 101C152T250EB2B | 106.0 | 6.2 | 1 3/4 x 3 1/8 |
| 1700 | 101C172T250AD2B | 101.0 | 6.3 | 1 3/8 x 4 5/8 |
| 1900 | 101C192T250AE2B | 90.7 | 6.9 | 1 3/8 x 5 1/8 |
| 1900 | 101C192T250EJ2B | 83.8 | 7.3 | 1 3/4 x 3 5/8 |
| 1900 | 101C192T250BB2B | 69.8 | 8.2 | 2 x 3 1/8 |
| 2200 | 101C222T250AF2B | 84.4 | 7.4 | 1 3/8 x 5 5/8 |
| 2300 | 101C232T250CH2B | 75.0 | 8.6 | 2 1/2 x 2 5/8 |
| 2300 | 101C232T250EC2B | 69.2 | 8.4 | 1 3/4 x 4 1/8 |
| 2400 | 101C242T250BJ2B | 58.0 | 9.5 | 2 x 3 5/8 |
| 2700 | 101C272T250ED2B | 58.9 | 9.5 | 1 3/4 x 4 5/8 |
| 2900 | 101C292T250BC2B | 50.3 | 10.7 | 2 x 4 1/8 |
| 3100 | 101C312T250CB2B | 55.6 | 10.6 | 2 1/2 x 3 1/8 |
| 3100 | 101C312T250EE2B | 51.3 | 10.5 | 1 3/4 x 5 1/8 |
| 3400 | 101C342T250BD2B | 45.6 | 11.7 | 2 x 4 5/8 |
| 3500 | 101C352T250EF2B | 45.5 | 11.6 | 1 3/4 x 5 5/8 |
| 3900 | 101C392T250BE2B | 42.0 | 12.6 | 2 x 5 1/8 |
| 4000 | 101C402T250CJ2B | 43.1 | 12.6 | 2 1/2 x 3 5/8 |
| 4500 | 101C452T250BF2B | 38.3 | 13.6 | 2 x 5 5/8 |
| 4700 | 101C472T250DB2B | 42.3 | 13.6 | 3 x 3 1/8 |
| 5100 | 101C512T250CC2B | 30.6 | 15.6 | 2 1/2 x 4 1/8 |
| 5700 | 101C572T250CD2B | 28.9 | 16.7 | 2 1/2 x 4 5/8 |
| 5900 | 101C592T250DJ2B | 33.7 | 16.0 | 3 x 3 5/8 |
| 6500 | 101C652T250CE2B | 26.6 | 18.0 | 2 1/2 x 5 1/8 |
| 7200 | 101C722T250DC2B | 27.6 | 18.4 | 3 x 4 1/8 |
| 7700 | 101C772T250CF2B | 24.1 | 19.5 | 2 1/2 x 5 5/8 |
| 8500 | 101C852T250DD2B | 23.4 | 20.7 | 3 x 4 5/8 |
| 9700 | 101C972T250DE2B | 20.5 | 22.8 | 3 x 5 1/8 |
| 11000 | 101C113T250DF2B | 18.1 | 25.0 | 3 x 5 5/8 |
| 12000 | 101C123T250DP2B | 16.6 | 26.5 | 3 x 5 7/8 |
| 16000 | 101C163T250DN2D | 13.4 | 32.8 | 3 x 7 5/8 |
| 18000 | 101C183T250DG2D | 11.1 | 36.7 | 3 x 8 5/8 |

Общество с ограниченной ответственностью «МосЧип» ИНН 7719860671 / КПП 771901001
Адрес: 105318, г.Москва, ул.Щербаковская д.3, офис 1107

**Данный компонент на территории Российской Федерации**

**Вы можете приобрести в компании MosChip.**

Для оперативного оформления запроса Вам необходимо перейти по данной ссылке:

http://moschip.ru/get-element

Вы можете разместить у нас заказ для любого Вашего проекта, будь то серийное производство или разработка единичного прибора.

В нашем ассортименте представлены ведущие мировые производители активных и пассивных электронных компонентов.

Нашей специализацией является поставка электронной компонентной базы двойного назначения, продукции таких производителей как XILINX, Intel (ex.ALTERA), Vicor, Microchip, Texas Instruments, Analog Devices, Mini-Circuits, Amphenol, Glenair.

Сотрудничество с глобальными дистрибьюторами электронных компонентов, предоставляет возможность заказывать и получать с международных складов практически любой перечень компонентов в оптимальные для Вас сроки.

На всех этапах разработки и производства наши партнеры могут получить квалифицированную поддержку опытных инженеров.

Система менеджмента качества компании отвечает требованиям в соответствии с ГОСТ Р ИСО 9001, ГОСТ РВ 0015-002 и ЭС РД 009

**Офис по работе с юридическими лицами:**

105318, г.Москва, ул.Щербаковская д.3, офис 1107, 1118, ДЦ «Щербаковский»

Телефон: +7 495 668-12-70 (многоканальный)

Факс: +7 495 668-12-70 (доб.304)

E-mail: info@moschip.ru

Skype отдела продаж:
moschip.ru
moschip.ru_4
moschip.ru_6
moschip.ru_9