Type 101C –55 °C to 105 °C Low-ESR, Wide-Temperature Grade

The Ultimate in Cold Performance and ESR

The Type 101C is the wide-temperature, low voltage version of the Type 550C. It is ideal for high-ripple current military and industrial applications that need full performance to –40 ºC and solid performance to –55 ºC. It also excels as apower-supply output capacitor because of its exceptionally low ESR. The extended cathode foil of the 101C assures heat flow from the capacitor element to the can in all mounting orientations.

Highlights

- 5,000 hour load life
- Ripple Current to > 100 amps @ 55 °C
- ESRs to 2.5 mΩ
- > 90% capacitance at –40 ºC
- Thermal-Pak™ extended cathode construction

Specifications

Operating Temperature: –55 °C to +105 °C

Rated Voltage: 7.5 to 250 Vdc

Capacitance: 290 µF to 1.5 F

Capacitance Tolerance: 7.5 to 150 Vdc: –10% +75%, 200 & 250 Vdc: 10 +50%

DCLeakage Current: $\leq 1.5\sqrt{CV}$ µA (4mA max. 5 minutes)

Cold Impedence: –55 °C multiple of 25 °C Z ≤ 3

Ripple Current Multipliers:

Ambient Temperature

45 °C	55 °C	65 °C	75 °C	85 °C	95 ºC	105 ºC
1.66	1.52	1.37	1.20	1.00	0.75	0.36

Frequency

	50 Hz	60 Hz	120 Hz	360 Hz	1 kHz	5 kHz	10 kHz & up
1 3/8" & 1 3/4" Diameters							
7.5 to 150 V	0.91	0.93	1.00	1.06	1.08	1.09	1.09
200 & 250 V	0.82	0.86	1.00	1.14	1.20	1.23	1.23
2" & 2 1/2" Diameters							
7.5 to 150 V	0.92	0.94	1.00	1.05	1.07	1.08	1.08
200 & 250 V	0.82	0.86	1.00	1.14	1.20	1.23	1.27
3" Diameters							
7.5 to 150 V	0.95	0.96	1.00	1.03	1.04	1.05	1.05
200 & 250 V	0.85	0.88	1.00	1.11	1.15	1.18	1.18

RoHS Compliant

Complies with the EU Directive 2002/95/EC requirement restricting the use of Lead (Pb), Mercury (Hg), Cadmium (Cd), Hexavalent chromium (Cr(VI)), PolyBrominated Biphenyls (PBB) and PolyBrominated Diphenyl Ethers (PBDE).

EIA Ripple Life: 5,000 h at full load @ 85 °C per EIA IS-749
ΔCapacitance ±20%
ESR 200% of limit
DCL 100% of limit

Life Test: 2,000 h at 105 °C and rated voltage
ΔCapacitance ±20%
ESR 200% of limit
DCL 100% of limit

Shelf Life: 500 h @ 105 °C, Capacitance, ESR and DCL, initial requirements.

Vibration: 10 to 55 Hz, 0.06" and 10 g max, 1.5 h ea. of 2 axis

Type 101C –55 °C to 105 °C Low-ESR, Wide-Temperature Grade

Outline Drawing

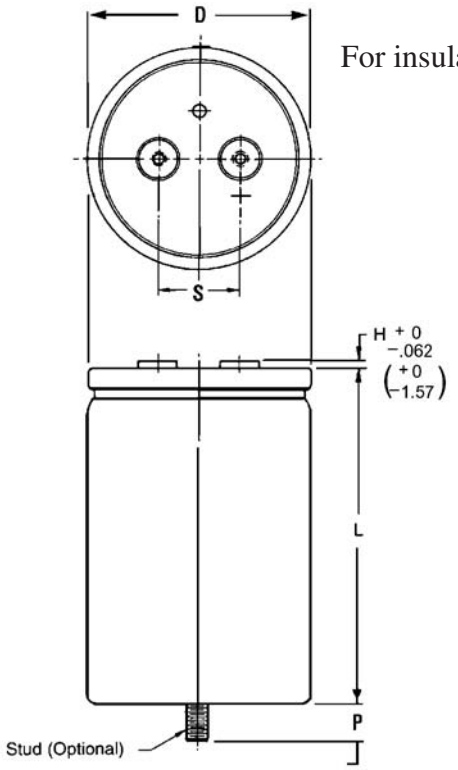

NOTE:With the stud-mount feature, a thermally-conductive disk can be inserted in the bottom flush with the outer insulating sleeve. This reduces the thermal resistance through the can bottom by 0.3 °C/W. Can Style P.

Case Dimensions

Uninsulated Case Dimensions

For insulated case, add 0.024”(0.610 mm) to “D”and 0.030”(0.762 mm) to height.

Case Code	Diam. (D) ±.031 Inches	Diam. (D) ±.78 mm	Length (L) ±.062 Inches	Length (L) ±1.57 mm	Terminals (S) ±0.015 Inches	Terminals (S) ±.38 mm	Typical Weight oz	Typical Weight g
AK	1.375	34.93	1.625	41.28	0.50	12.70	1.9	54
AA	1.375	34.93	2.125	53.98	0.50	12.70	2.0	57
AH	1.375	34.93	2.625	66.68	0.50	12.70	2.7	77
AB	1.375	34.93	3.125	79.38	0.50	12.70	3.3	94
AJ	1.375	34.93	3.625	92.08	0.50	12.70	3.8	108
AC	1.375	34.93	4.125	104.78	0.50	12.70	4.4	125
AD	1.375	34.93	4.625	117.48	0.50	12.70	5.1	145
AE	1.375	34.93	5.125	130.18	0.50	12.70	6.8	193
AF	1.375	34.93	5.625	142.88	0.50	12.70	8.1	230
EA	1.750	44.45	2.125	53.98	0.75	19.05	2.7	76
EH	1.750	44.45	2.625	66.68	0.75	19.05	3.8	108
EB	1.750	44.45	3.125	79.38	0.75	19.05	5.1	145
EJ	1.750	44.45	3.625	92.08	0.75	19.05	6.8	193
EC	1.750	44.45	4.125	104.78	0.75	19.05	8.1	230
ED	1.750	44.45	4.625	117.48	0.75	19.05	9.0	255
EE	1.750	44.45	5.125	130.18	0.75	19.05	9.5	269
EF	1.750	44.45	5.625	142.88	0.75	19.05	10.5	298
BA	2.000	50.80	2.125	53.98	0.75	22.23	5.4	153
BH	2.000	50.80	2.625	66.68	0.75	22.23	6.1	173
BB	2.000	50.80	3.125	79.38	0.75	22.23	6.8	193
BJ	2.000	50.80	3.625	92.08	0.75	22.23	8.2	232
BC	2.000	50.80	4.125	104.78	0.75	22.23	9.5	269
BD	2.000	50.80	4.625	117.48	0.75	22.23	10.3	292
BE	2.000	50.80	5.125	130.18	0.75	22.23	10.7	303
BF	2.000	50.80	5.625	142.88	0.75	22.23	13.0	369
CH	2.500	63.50	2.625	66.68	1.25	28.58	9.2	261
CB	2.500	63.50	3.125	79.38	1.25	28.58	10.4	295
CJ	2.500	63.50	3.625	92.08	1.25	28.58	12.7	361
CC	2.500	63.50	4.125	104.78	1.25	28.58	15.0	425
CD	2.500	63.50	4.625	117.48	1.25	28.58	17.2	488
CE	2.500	63.50	5.125	130.18	1.25	28.58	19.3	547
CF	2.500	63.50	5.625	142.88	1.25	28.58	21.4	607
DB	3.000	76.20	3.125	79.38	1.25	31.75	16.7	473
DJ	3.000	76.20	3.625	92.08	1.25	31.75	20.0	567
DC	3.000	76.20	4.125	104.78	1.25	31.75	22.2	629
DD	3.000	76.20	4.625	117.48	1.25	31.75	25.5	723
DE	3.000	76.20	5.125	130.18	1.25	31.75	30.0	850
DF	3.000	76.20	5.625	142.88	1.25	31.75	31.9	904
DP	3.000	76.20	5.875	149.23	1.25	31.75	32.8	931
DN	3.000	76.20	7.625	193.68	1.25	31.75	39.5	1119
DG	3.000	76.20	8.625	219.08	1.25	31.75	43.3	1227

Stud Dimensions

Case Diam.	Stud Thread	P±0.039” (±1.0 mm)
1.38	M8	0.470” (12.0)
1.75	M8	0.470” (12.0)
2.00	M12	0.630” (16.0)
2.50	M12	0.630” (16.0)
3.00	M12	0.630” (16.0)

Terminal Dimensions

Terminal Style	For Case Diameters	Code	Post Diameter in	Post Diameter mm	H max in	H max mm	Thread	min Full Thread in	min Full Thread mm	Torque in·lb	Torque N·m
Low Post	1⅜ to 3	A	0.314	8.0	0.094	2.4	10–32	0.218	5.5	25	2.82
High Post	1⅜ to 3	B	0.314	8.0	0.281	7.1	10–32	0.375	9.5	25	2.82
High Current, Med	2½ & 3	D	0.434	11.0	0.190	4.8	¼–28	0.312	7.9	50	5.65

Click here to see Hardware & Mounting Options

Type 101C –55 °C to 105 °C Low-ESR, Wide-Temperature Grade

Part Numbering System

101C	183	T	250	DG	2	D	S
Type	**Capacitance**	**Tolerance**	**Voltage**	**Case Code**	**Insulation**	**Terminal**	**Can Style**
	100 = 10 µF **101** = 100 µF **183** = 18,000 µF	**M** = ±20% **U** = –10%+75% **T** = –10%+50%	**7R5** = 7.5 Vdc **063** = 63 Vdc **100** = 100 Vdc		**0**= None **1**= Polyester **2**= PVC	**A** = Low Post **B** = High Post **D** = High Current	**Blank**= Standard Can **S**= Stud Bottom **P**= Stud with Thermal Pad

Standard insulation is 0.008-in PVC sleeve with 0.01-in polypropylene end disk.

Typical Performance Curves

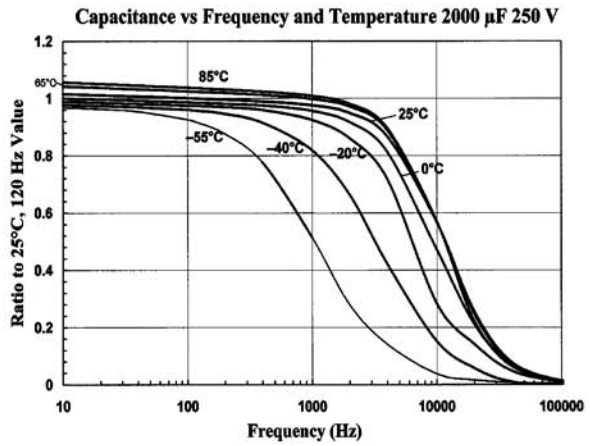

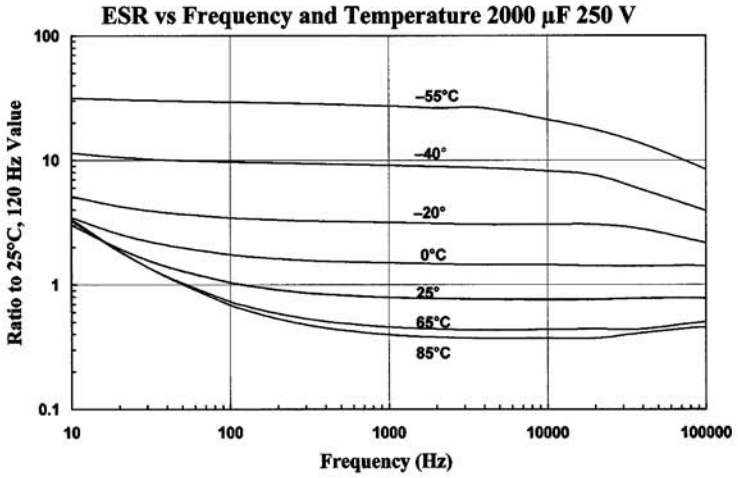

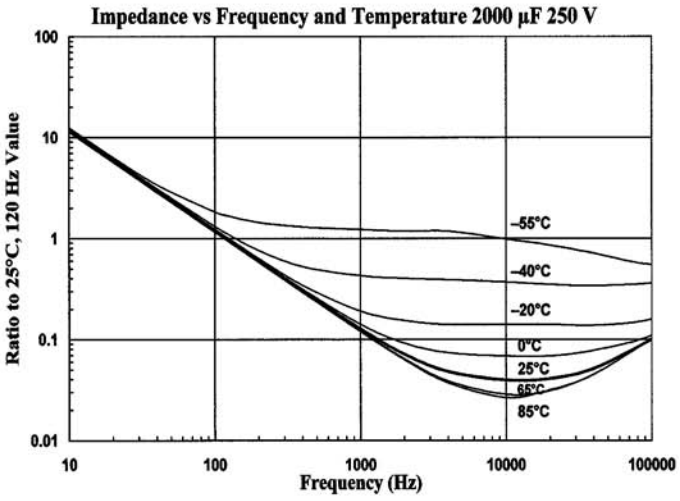

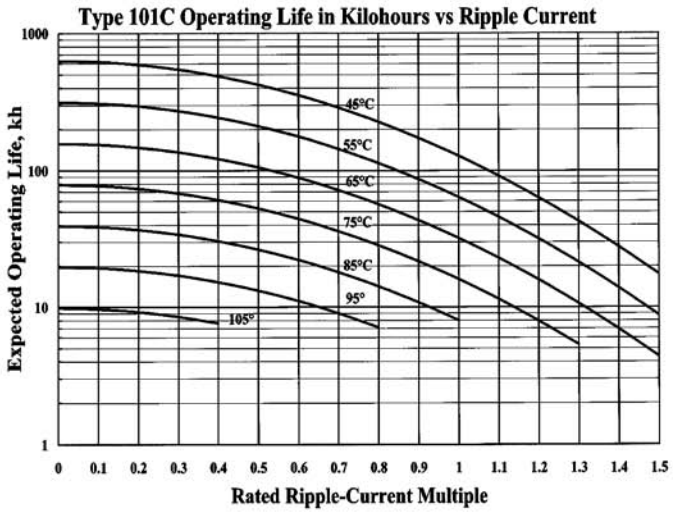

Type 101C –55 °C to 105 °C Low-ESR, Wide-Temperature Grade

Ratings

Cap. (µF)	Catalog Part Number	ESR Max. @ 25 °C 120 Hz (mΩ)	Ripple Max. @ 85°C 120 Hz (A)	Nominal Size D x L (inches)
7.5 Vdc (10 Vdc Surge)				
28000	101C283U7R5AK2B	38.2	6.1	1 3/8 x 1 5/8
47000	101C473U7R5AA2B	25.0	8.7	1 3/8 x 2 1/8
66000	101C663U7R5AH2B	19.0	11.4	1 3/8 x 2 5/8
79000	101C793U7R5BA2B	18.3	14.0	2 x 2 1/8
84000	101C843U7R5EA2B	22.6	11.6	1 3/4 x 2 1/8
84000	101C843U7R5AB2B	15.4	13.8	1 3/8 x 3 1/8
100000	101C104U7R5AJ2B	13.2	15.9	1 3/8 x 3 5/8
120000	101C124U7R5EH2B	16.5	14.7	1 3/4 x 2 5/8
120000	101C124U7R5BH2B	12.4	18.3	2 x 2 5/8
120000	101C124U7R5AC2B	12.1	17.4	1 3/8 x 4 1/8
140000	101C144U7R5AD2B	10.8	19.2	1 3/8 x 4 5/8
160000	101C164U7R5EB2B	13.2	17.5	1 3/4 x 3 1/8
160000	101C164U7R5AE2B	9.9	20.9	1 3/8 x 5 1/8
170000	101C174U7R5BB2B	8.5	23.6	2 x 3 1/8
180000	101C184U7R5AF2B	9.1	22.6	1 3/8 x 5 5/8
200000	101C204U7R5EJ2B	11.1	20.1	1 3/4 x 3 5/8
210000	101C214U7R5CH2B	9.4	24.2	2 1/2 x 2 5/8
220000	101C224U7R5EC2B	8.2	24.4	1 3/4 x 4 1/8
220000	101C224U7R5BJ2B	7.6	26.2	2 x 3 5/8
260000	101C264U7R5BC2B	6.0	31.0	2 x 4 1/8
270000	101C274U7R5ED2B	8.7	24.7	1 3/4 x 4 5/8
280000	101C284U7R5CB2B	7.2	29.4	2 1/2 x 3 1/8
300000	101C304U7R5BD2B	5.7	32.9	2 x 4 5/8
310000	101C314U7R5EE2B	7.9	26.8	1 3/4 x 5 1/8
350000	101C354U7R5EF2B	7.4	28.8	1 3/4 x 5 5/8
350000	101C354U7R5BE2B	5.2	35.9	2 x 5 1/8
360000	101C364U7R5CJ2D	5.9	34.2	2 1/2 x 3 5/8
390000	101C394U7R5DB2D	7.1	33.1	3 x 3 1/8
390000	101C394U7R5BF2B	4.9	38.2	2 x 5 5/8
430000	101C434U7R5CC2D	4.2	42.4	2 1/2 x 4 1/8
490000	101C494U7R5DJ2D	5.8	38.5	3 x 3 5/8
490000	101C494U7R5CD2D	4.4	42.8	2 1/2 x 4 5/8
570000	101C574U7R5CE2D	4.0	46.7	2 1/2 x 5 1/8
610000	101C614U7R5DC2D	4.6	45.2	3 x 4 1/8
640000	101C644U7R5CF2D	3.4	52.1	2 1/2 x 5 5/8
700000	101C704U7R5DD2D	4.0	50.0	3 x 4 5/8
810000	101C814U7R5DE2D	3.7	53.6	3 x 5 1/8
910000	101C914U7R5DF2D	3.4	57.8	3 x 5 5/8
960000	101C964U7R5DP2D	3.4	58.8	3 x 5 7/8
1300000	101C135U7R5DN2D	2.8	70.2	3 x 7 5/8
1500000	101C155U7R5DG2D	2.5	76.4	3 x 8 5/8
10 Vdc (15 Vdc Surge)				
25000	101C253U010AK2B	36.0	6.2	1 3/8 x 1 5/8
41000	101C413U010AA2B	23.9	8.9	1 3/8 x 2 1/8
58000	101C583U010AH2B	18.1	11.7	1 3/8 x 2 5/8
68000	101C683U010BA2B	17.8	14.2	2 x 2 1/8
69000	101C693U010EA2B	22.8	11.6	1 3/4 x 2 1/8
74000	101C743U010AB2B	14.6	14.2	1 3/8 x 3 1/8
89000	101C893U010AJ2B	12.5	16.4	1 3/8 x 3 5/8
99000	101C993U010EH2B	16.6	14.6	1 3/4 x 2 5/8
110000	101C114U010BH2B	12.1	18.6	2 x 2 5/8
110000	101C114U010AC2B	11.3	18.1	1 3/8 x 4 1/8
120000	101C124U010AD2B	10.3	19.7	1 3/8 x 4 5/8
130000	101C134U010EB2B	13.2	17.4	1 3/4 x 3 1/8
140000	101C144U010AE2B	9.4	21.4	1 3/8 x 5 1/8
150000	101C154U010BB2B	8.1	24.2	2 x 3 1/8
160000	101C164U010EJ2B	11.1	20.0	1 3/4 x 3 5/8
160000	101C164U010AF2B	8.7	23.1	1 3/8 x 5 5/8
180000	101C184U010CH2B	9.2	24.5	2 1/2 x 2 5/8
180000	101C184U010BJ2B	7.4	26.5	2 x 3 5/8
190000	101C194U010EC2B	8.2	24.4	1 3/4 x 4 1/8
220000	101C224U010ED2B	8.7	24.7	1 3/4 x 4 5/8
230000	101C234U010BC2B	5.7	31.7	2 x 4 1/8
240000	101C244U010CB2B	7.0	29.7	2 1/2 x 3 1/8
250000	101C254U010EE2B	8.0	26.7	1 3/4 x 5 1/8
260000	101C264U010BD2B	5.5	33.5	2 x 4 5/8
280000	101C284U010EF2B	7.4	28.7	1 3/4 x 5 5/8
300000	101C304U010CJ2D	5.7	34.6	2 1/2 x 3 5/8
300000	101C304U010BE2B	5.0	36.5	2 x 5 1/8
340000	101C344U010BF2B	4.7	38.9	2 x 5 5/8
360000	101C364U010DB2D	7.0	33.4	3 x 3 1/8
370000	101C374U010CC2D	4.0	43.0	2 1/2 x 4 1/8
430000	101C434U010CD2D	4.3	43.5	2 1/2 x 4 5/8
450000	101C454U010DJ2D	5.7	38.8	3 x 3 5/8
500000	101C504U010CE2D	3.8	47.5	2 1/2 x 5 1/8
550000	101C554U010DC2D	4.5	45.5	3 x 4 1/8
560000	101C564U010CF2D	3.3	53.0	2 1/2 x 5 5/8
640000	101C644U010DD2D	4.0	50.4	3 x 4 5/8
740000	101C744U010DE2D	3.7	54.0	3 x 5 1/8
840000	101C844U010DF2D	3.3	58.2	3 x 5 5/8
880000	101C884U010DP2D	3.3	59.2	3 x 5 7/8
1200000	101C125U010DN2D	2.8	70.7	3 x 7 5/8
1400000	101C145U010DG2D	2.5	76.9	3 x 8 5/8
16 Vdc (25 Vdc Surge)				
16000	101C163U016AK2B	39.2	6.0	1 3/8 x 1 5/8
27000	101C273U016AA2B	26.0	8.5	1 3/8 x 2 1/8
38000	101C383U016AH2B	20.0	11.1	1 3/8 x 2 5/8
45000	101C453U016BA2B	19.1	13.7	2 x 2 1/8
46000	101C463U016EA2B	24.3	11.2	1 3/4 x 2 1/8
49000	101C493U016AB2B	15.9	13.6	1 3/8 x 3 1/8
59000	101C593U016AJ2B	13.5	15.7	1 3/8 x 3 5/8
66000	101C663U016EH2B	17.7	14.2	1 3/4 x 2 5/8
71000	101C713U016BH2B	13.0	18.0	2 x 2 5/8
73000	101C733U016AC2B	12.2	17.4	1 3/8 x 4 1/8
82000	101C823U016AD2B	11.1	19.0	1 3/8 x 4 5/8

Type 101C –55 °C to 105 °C Low-ESR, Wide-Temperature Grade

Cap. (µF)	Catalog Part Number	ESR Max. @ 25 °C 120 Hz (mΩ)	Ripple Max. @ 85°C 120 Hz (A)	Nominal Size D x L (inches)
86000	101C863U016EB2B	14.1	16.9	1 3/4 x 3 1/8
93000	101C933U016AE2B	10.1	20.6	1 3/8 x 5 1/8
100000	101C104U016BB2B	8.6	23.4	2 x 3 1/8
110000	101C114U016EJ2B	11.8	19.4	1 3/4 x 3 5/8
110000	101C114U016AF2B	9.3	22.3	1 3/8 x 5 5/8
120000	101C124U016CH2B	9.8	23.7	2 1/2 x 2 5/8
120000	101C124U016BJ2B	8.0	25.7	2 x 3 5/8
130000	101C134U016EC2B	8.6	23.8	1 3/4 x 4 1/8
150000	101C154U016ED2B	9.2	24.0	1 3/4 x 4 5/8
160000	101C164U016CB2B	7.5	28.9	2 1/2 x 3 1/8
160000	101C164U016BC2B	6.0	30.9	2 x 4 1/8
170000	101C174U016EE2B	8.4	26.0	1 3/4 x 5 1/8
170000	101C174U016BD2B	5.9	32.5	2 x 4 5/8
190000	101C194U016EF2B	7.8	28.0	1 3/4 x 5 5/8
200000	101C204U016CJ2D	6.1	33.6	2 1/2 x 3 5/8
200000	101C204U016BE2B	5.3	35.4	2 x 5 1/8
230000	101C234U016BF2B	4.9	38.0	2 x 5 5/8
240000	101C244U016DB2D	7.3	32.7	3 x 3 1/8
250000	101C254U016CC2D	4.3	41.9	2 1/2 x 4 1/8
290000	101C294U016CD2D	4.5	42.3	2 1/2 x 4 5/8
300000	101C304U016DJ2D	5.9	38.1	3 x 3 5/8
330000	101C334U016CE2D	4.0	46.2	2 1/2 x 5 1/8
360000	101C364U016DC2D	4.7	44.6	3 x 4 1/8
370000	101C374U016CF2D	3.4	51.6	2 1/2 x 5 5/8
430000	101C434U016DD2D	4.1	49.5	3 x 4 5/8
490000	101C494U016DE2D	3.8	53.0	3 x 5 1/8
560000	101C564U016DF2D	3.5	57.2	3 x 5 5/8
590000	101C594U016DP2D	3.4	58.2	3 x 5 7/8
800000	101C804U016DN2D	2.9	69.6	3 x 7 5/8
920000	101C924U016DG2D	2.6	75.8	3 x 8 5/8
20 Vdc (30 Vdc Surge)				
13000	101C133U020AK2B	39.2	6.0	1 3/8 x 1 5/8
21000	101C213U020AA2B	26.0	8.5	1 3/8 x 2 1/8
29000	101C293U020AH2B	20.0	11.1	1 3/8 x 2 5/8
34000	101C343U020BA2B	19.1	13.7	2 x 2 1/8
35000	101C353U020EA2B	24.3	11.2	1 3/4 x 2 1/8
38000	101C383U020AB2B	15.9	13.6	1 3/8 x 3 1/8
45000	101C453U020AJ2B	13.5	15.7	1 3/8 x 3 5/8
50000	101C503U020EH2B	17.7	14.2	1 3/4 x 2 5/8
54000	101C543U020BH2B	13.0	18.0	2 x 2 5/8
55000	101C553U020AC2B	12.2	17.4	1 3/8 x 4 1/8
62000	101C623U020AD2B	11.1	19.0	1 3/8 x 4 5/8
66000	101C663U020EB2B	14.1	16.9	1 3/4 x 3 1/8
71000	101C713U020AE2B	10.1	20.6	1 3/8 x 5 1/8
77000	101C773U020BB2B	8.6	23.4	2 x 3 1/8
80000	101C803U020AF2B	9.3	22.3	1 3/8 x 5 5/8
81000	101C813U020EJ2B	11.8	19.4	1 3/4 x 3 5/8
89000	101C893U020CH2B	9.8	23.7	2 1/2 x 2 5/8

Cap. (µF)	Catalog Part Number	ESR Max. @ 25 °C 120 Hz (mΩ)	Ripple Max. @ 85°C 120 Hz (A)	Nominal Size D x L (inches)
94000	101C943U020BJ2B	8.0	25.7	2 x 3 5/8
98000	101C983U020EC2B	8.6	23.8	1 3/4 x 4 1/8
110000	101C114U020ED2B	9.2	24.0	1 3/4 x 4 5/8
120000	101C124U020CB2B	7.5	28.9	2 1/2 x 3 1/8
120000	101C124U020BC2B	6.0	30.9	2 x 4 1/8
130000	101C134U020EE2B	8.4	26.0	1 3/4 x 5 1/8
130000	101C134U020BD2B	5.9	32.5	2 x 4 5/8
140000	101C144U020EF2B	7.8	28.0	1 3/4 x 5 5/8
150000	101C154U020CJ2D	6.1	33.6	2 1/2 x 3 5/8
150000	101C154U020BE2B	5.3	35.4	2 x 5 1/8
180000	101C184U020DB2D	7.3	32.7	3 x 3 1/8
180000	101C184U020BF2B	4.9	38.0	2 x 5 5/8
190000	101C194U020CC2D	4.3	41.9	2 1/2 x 4 1/8
220000	101C224U020CD2D	4.5	42.3	2 1/2 x 4 5/8
230000	101C234U020DJ2D	5.9	38.1	3 x 3 5/8
250000	101C254U020CE2D	4.0	46.2	2 1/2 x 5 1/8
280000	101C284U020DC2D	4.7	44.6	3 x 4 1/8
280000	101C284U020CF2D	3.4	51.6	2 1/2 x 5 5/8
330000	101C334U020DD2D	4.1	49.5	3 x 4 5/8
380000	101C384U020DE2D	3.8	53.0	3 x 5 1/8
420000	101C424U020DF2D	3.5	57.2	3 x 5 5/8
450000	101C454U020DP2D	3.4	58.2	3 x 5 7/8
610000	101C614U020DN2D	2.9	69.4	3 x 7 5/8
710000	101C714U020DG2D	2.6	75.5	3 x 8 5/8
25 Vdc (40 Vdc Surge)				
9900	101C992U025AK2B	42.6	5.7	1 3/8 x 1 5/8
16000	101C163U025AA2B	28.2	8.2	1 3/8 x 2 1/8
23000	101C233U025AH2B	20.9	10.8	1 3/8 x 2 5/8
27000	101C273U025EA2B	25.1	11.0	1 3/4 x 2 1/8
27000	101C273U025BA2B	19.9	13.5	2 x 2 1/8
30000	101C303U025AB2B	16.6	13.3	1 3/8 x 3 1/8
35000	101C353U025AJ2B	14.2	15.4	1 3/8 x 3 5/8
39000	101C393U025EH2B	18.3	13.9	1 3/4 x 2 5/8
42000	101C423U025BH2B	13.5	17.6	2 x 2 5/8
43000	101C433U025AC2B	12.7	17.0	1 3/8 x 4 1/8
49000	101C493U025AD2B	11.6	18.6	1 3/8 x 4 5/8
52000	101C523U025EB2B	14.5	16.6	1 3/4 x 3 1/8
56000	101C563U025AE2B	10.6	20.2	1 3/8 x 5 1/8
60000	101C603U025BB2B	9.0	22.9	2 x 3 1/8
63000	101C633U025AF2B	9.7	21.9	1 3/8 x 5 5/8
64000	101C643U025EJ2B	12.2	19.1	1 3/4 x 3 5/8
70000	101C703U025CH2B	10.1	23.3	2 1/2 x 2 5/8
73000	101C733U025BJ2B	8.3	25.2	2 x 3 5/8
77000	101C773U025EC2B	9.9	22.2	1 3/4 x 4 1/8
88000	101C883U025ED2B	9.5	23.6	1 3/4 x 4 5/8
90000	101C903U025BC2B	6.4	30.0	2 x 4 1/8
95000	101C953U025CB2B	7.7	28.4	2 1/2 x 3 1/8
100000	101C104U025EE2B	8.6	25.7	1 3/4 x 5 1/8

Type 101C –55 °C to 105 °C Low-ESR, Wide-Temperature Grade

Cap. (µF)	Catalog Part Number	ESR Max. @ 25 °C 120 Hz (mΩ)	Ripple Max. @ 85°C 120 Hz (A)	Nominal Size D x L (inches)
100000	101C104U025BD2B	6.1	31.9	2 x 4 5/8
110000	101C114U025EF2B	8.0	27.6	1 3/4 x 5 5/8
120000	101C124U025CJ2D	6.3	33.1	2 1/2 x 3 5/8
120000	101C124U025BE2B	5.5	34.8	2 x 5 1/8
140000	101C144U025DB2D	7.4	32.4	3 x 3 1/8
140000	101C144U025BF2B	5.1	37.4	2 x 5 5/8
150000	101C154U025CC2D	4.5	40.6	2 1/2 x 4 1/8
170000	101C174U025CD2D	4.7	41.6	2 1/2 x 4 5/8
180000	101C184U025DJ2D	6.0	37.7	3 x 3 5/8
200000	101C204U025CE2D	4.2	45.5	2 1/2 x 5 1/8
220000	101C224U025DC2D	4.8	44.1	3 x 4 1/8
220000	101C224U025CF2D	3.6	50.3	2 1/2 x 5 5/8
260000	101C264U025DD2D	4.5	47.3	3 x 4 5/8
290000	101C294U025DE2D	4.0	51.6	3 x 5 1/8
330000	101C334U025DF2D	3.5	56.7	3 x 5 5/8
350000	101C354U025DP2D	3.5	57.7	3 x 5 7/8
480000	101C484U025DN2D	2.9	69.0	3 x 7 5/8
550000	101C554U025DG2D	2.6	75.2	3 x 8 5/8
30 Vdc (45 Vdc Surge)				
5400	101C542U030AK2B	43.9	5.6	1 3/8 x 1 5/8
13000	101C133U030AA2B	29.8	8.0	1 3/8 x 2 1/8
19000	101C193U030AH2B	21.4	10.7	1 3/8 x 2 5/8
23000	101C233U030EA2B	23.1	11.5	1 3/4 x 2 1/8
23000	101C233U030BA2B	18.8	13.8	2 x 2 1/8
24000	101C243U030AB2B	16.0	13.6	1 3/8 x 3 1/8
30000	101C303U030AJ2B	14.1	15.4	1 3/8 x 3 5/8
33000	101C333U030EH2B	16.9	14.5	1 3/4 x 2 5/8
36000	101C363U030AC2B	13.0	16.8	1 3/8 x 4 1/8
36000	101C363U030BH2B	12.8	18.1	2 x 2 5/8
41000	101C413U030AD2B	11.6	18.6	1 3/8 x 4 5/8
44000	101C443U030EB2B	13.4	17.3	1 3/4 x 3 1/8
47000	101C473U030AE2B	10.6	20.2	1 3/8 x 5 1/8
49000	101C493U030BB2B	8.7	23.3	2 x 3 1/8
53000	101C533U030AF2B	9.8	21.8	1 3/8 x 5 5/8
54000	101C543U030EJ2B	11.3	19.9	1 3/4 x 3 5/8
59000	101C593U030CH2B	9.3	24.4	2 1/2 x 2 5/8
62000	101C623U030BJ2B	7.8	25.8	2 x 3 5/8
64000	101C643U030EC2B	9.2	23.0	1 3/4 x 4 1/8
75000	101C753U030ED2B	8.4	25.1	1 3/4 x 4 5/8
75000	101C753U030BC2B	6.3	30.1	2 x 4 1/8
81000	101C813U030CB2B	7.1	29.7	2 1/2 x 3 1/8
85000	101C853U030EE2B	7.9	26.9	1 3/4 x 5 1/8
88000	101C883U030BD2B	5.8	32.7	2 x 4 5/8
95000	101C953U030EF2B	7.5	28.5	1 3/4 x 5 5/8
100000	101C104U030CJ2D	5.7	34.6	2 1/2 x 3 5/8
100000	101C104U030BE2B	5.2	35.6	2 x 5 1/8
110000	101C114U030BF2B	4.8	38.4	2 x 5 5/8
120000	101C124U030DB2D	7.0	33.3	3 x 3 1/8
120000	101C124U030CC2D	4.7	40.0	2 1/2 x 4 1/8
150000	101C154U030DJ2D	5.7	38.7	3 x 3 5/8
150000	101C154U030CD2D	4.3	43.4	2 1/2 x 4 5/8
170000	101C174U030CE2D	3.8	47.4	2 1/2 x 5 1/8
180000	101C184U030DC2D	4.8	43.9	3 x 4 1/8
190000	101C194U030CF2D	3.5	51.2	2 1/2 x 5 5/8
220000	101C224U030DD2D	4.3	48.5	3 x 4 5/8
250000	101C254U030DE2D	3.8	52.8	3 x 5 1/8
280000	101C284U030DF2D	3.5	56.9	3 x 5 5/8
300000	101C304U030DP2D	3.4	58.8	3 x 5 7/8
410000	101C414U030DN2D	2.9	69.5	3 x 7 5/8
470000	101C474U030DG2D	2.6	75.8	3 x 8 5/8
40 Vdc (55 Vdc Surge)				
5400	101C542U040AK2B	47.6	5.4	1 3/8 x 1 5/8
9000	101C902U040AA2B	32.3	7.6	1 3/8 x 2 1/8
13000	101C133U040AH2B	23.1	10.3	1 3/8 x 2 5/8
16000	101C163U040EA2B	26.6	10.7	1 3/4 x 2 1/8
16000	101C163U040BA2B	21.2	13.0	2 x 2 1/8
17000	101C173U040AB2B	17.3	13.1	1 3/8 x 3 1/8
21000	101C213U040AJ2B	15.2	14.8	1 3/8 x 3 5/8
23000	101C233U040EH2B	19.3	13.5	1 3/4 x 2 5/8
25000	101C253U040BH2B	14.3	17.1	2 x 2 5/8
25000	101C253U040AC2B	14.0	16.2	1 3/8 x 4 1/8
29000	101C293U040AD2B	12.4	17.9	1 3/8 x 4 5/8
30000	101C303U040EB2B	15.4	16.2	1 3/4 x 3 1/8
33000	101C333U040AE2B	11.3	19.6	1 3/8 x 5 1/8
34000	101C343U040BB2B	9.8	22.0	2 x 3 1/8
37000	101C373U040EJ2B	12.9	18.6	1 3/4 x 3 5/8
37000	101C373U040AF2B	10.4	21.1	1 3/8 x 5 5/8
41000	101C413U040CH2B	10.7	22.7	2 1/2 x 2 5/8
43000	101C433U040BJ2B	8.8	24.4	2 x 3 5/8
45000	101C453U040EC2B	10.5	21.6	1 3/4 x 4 1/8
52000	101C523U040ED2B	9.5	23.6	1 3/4 x 4 5/8
52000	101C523U040BC2B	7.1	28.5	2 x 4 1/8
56000	101C563U040CB2B	8.1	27.6	2 1/2 x 3 1/8
59000	101C593U040EE2B	8.9	25.4	1 3/4 x 5 1/8
61000	101C613U040BD2B	6.5	31.0	2 x 4 5/8
66000	101C663U040EF2B	8.4	26.9	1 3/4 x 5 5/8
70000	101C703U040BE2B	5.8	33.8	2 x 5 1/8
71000	101C713U040CJ2D	6.6	32.2	2 1/2 x 3 5/8
79000	101C793U040BF2B	5.3	36.5	2 x 5 5/8
83000	101C833U040DB2D	8.6	30.1	3 x 3 1/8
86000	101C863U040CC2D	5.4	37.3	2 1/2 x 4 1/8
100000	101C104U040CD2D	4.9	40.6	2 1/2 x 4 5/8
110000	101C114U040DJ2D	7.0	35.1	3 x 3 5/8
120000	101C124U040CE2D	4.4	44.4	2 1/2 x 5 1/8
130000	101C134U040DC2D	5.3	41.9	3 x 4 1/8
130000	101C134U040CF2D	4.0	48.0	2 1/2 x 5 5/8

Type 101C –55 °C to 105 °C Low-ESR, Wide-Temperature Grade

Cap. (µF)	Catalog Part Number	ESR Max. @ 25 °C 120 Hz (mΩ)	Ripple Max. @ 85°C 120 Hz (A)	Nominal Size D x L (inches)
150000	101C154U040DD2D	5.2	44.0	3 x 4 5/8
170000	101C174U040DE2D	4.6	48.1	3 x 5 1/8
190000	101C194U040DF2D	4.2	51.9	3 x 5 5/8
210000	101C214U040DP2D	4.0	53.8	3 x 5 7/8
280000	101C284U040DN2D	3.4	63.9	3 x 7 5/8
330000	101C334U040DG2D	3.0	69.9	3 x 8 5/8
50 Vdc (75 Vdc Surge)				
3800	101C382U050AK2B	48.4	5.4	1 3/8 x 1 5/8
7000	101C702U050AA2B	30.8	7.8	1 3/8 x 2 1/8
10000	101C103U050AH2B	22.0	10.5	1 3/8 x 2 5/8
12000	101C123U050EA2B	26.5	10.7	1 3/4 x 2 1/8
12000	101C123U050BA2B	20.8	13.2	2 x 2 1/8
13000	101C133U050AB2B	17.5	13.0	1 3/8 x 3 1/8
16000	101C163U050AJ2B	14.6	15.2	1 3/8 x 3 5/8
18000	101C183U050EH2B	19.3	13.6	1 3/4 x 2 5/8
19000	101C193U050BH2B	14.1	17.2	2 x 2 5/8
19000	101C193U050AC2B	13.4	16.6	1 3/8 x 4 1/8
22000	101C223U050AD2B	11.9	18.3	1 3/8 x 4 5/8
24000	101C243U050EB2B	15.3	16.2	1 3/4 x 3 1/8
25000	101C253U050AE2B	10.8	20.0	1 3/8 x 5 1/8
27000	101C273U050BB2B	9.6	22.2	2 x 3 1/8
29000	101C293U050EJ2B	12.8	18.6	1 3/4 x 3 5/8
29000	101C293U050AF2B	10.0	21.5	1 3/8 x 5 5/8
32000	101C323U050CH2B	9.6	24.0	2 1/2 x 2 5/8
34000	101C343U050BJ2B	8.6	24.6	2 x 3 5/8
35000	101C353U050EC2B	10.5	21.6	1 3/4 x 4 1/8
40000	101C403U050ED2B	9.5	23.6	1 3/4 x 4 5/8
41000	101C413U050BC2B	7.2	28.2	2 x 4 1/8
44000	101C443U050CB2B	8.2	27.6	2 1/2 x 3 1/8
46000	101C463U050EE2B	8.8	25.4	1 3/4 x 5 1/8
48000	101C483U050BD2B	6.3	31.2	2 x 4 5/8
52000	101C523U050EF2B	8.4	27.0	1 3/4 x 5 5/8
55000	101C553U050CJ2D	6.6	32.2	2 1/2 x 3 5/8
55000	101C553U050BE2B	5.7	34.1	2 x 5 1/8
62000	101C623U050BF2B	5.2	36.8	2 x 5 5/8
65000	101C653U050DB2B	8.9	29.5	3 x 3 1/8
67000	101C673U050CC2D	5.4	37.3	2 1/2 x 4 1/8
79000	101C793U050CD2D	4.9	40.5	2 1/2 x 4 5/8
83000	101C833U050DJ2D	7.3	34.4	3 x 3 5/8
90000	101C903U050CE2D	4.4	44.3	2 1/2 x 5 1/8
100000	101C104U050DC2D	5.5	41.1	3 x 4 1/8
100000	101C104U050CF2D	4.0	47.9	2 1/2 x 5 5/8
120000	101C124U050DD2D	5.4	43.2	3 x 4 5/8
130000	101C134U050DE2D	4.8	47.2	3 x 5 1/8
150000	101C154U050DF2D	4.4	51.0	3 x 5 5/8
160000	101C164U050DP2D	4.2	52.9	3 x 5 7/8
220000	101C224U050DN2D	3.5	63.0	3 x 7 5/8
260000	101C264U050DG2D	3.1	69.0	3 x 8 5/8

Cap. (µF)	Catalog Part Number	ESR Max. @ 25 °C 120 Hz (mΩ)	Ripple Max. @ 85°C 120 Hz (A)	Nominal Size D x L (inches)
63 Vdc (85 Vdc Surge)				
2800	101C282U063AK2B	57.9	4.9	1 3/8 x 1 5/8
5000	101C502U063AA2B	35.5	7.3	1 3/8 x 2 1/8
7200	101C722U063AH2B	25.8	9.8	1 3/8 x 2 5/8
8800	101C882U063BA2B	22.8	12.6	2 x 2 1/8
8900	101C892U063EA2B	28.0	10.4	1 3/4 x 2 1/8
9400	101C942U063AB2B	20.4	12.0	1 3/8 x 3 1/8
12000	101C123U063AJ2B	17.1	14.0	1 3/8 x 3 5/8
13000	101C133U063EH2B	20.4	13.2	1 3/4 x 2 5/8
14000	101C143U063BH2B	15.4	16.5	2 x 2 5/8
14000	101C143U063AC2B	14.8	15.8	1 3/8 x 4 1/8
16000	101C163U063AD2B	13.2	17.4	1 3/8 x 4 5/8
17000	101C173U063EB2B	16.1	15.8	1 3/4 x 3 1/8
18000	101C183U063AE2B	12.0	19.0	1 3/8 x 5 1/8
19000	101C193U063BB2B	10.2	21.5	2 x 3 1/8
20000	101C203U063AF2B	11.0	20.5	1 3/8 x 5 5/8
21000	101C213U063EJ2B	13.5	18.2	1 3/4 x 3 5/8
23000	101C233U063CH2B	11.3	22.1	2 1/2 x 2 5/8
24000	101C243U063BJ2B	9.6	23.4	2 x 3 5/8
25000	101C253U063EC2B	11.0	21.1	1 3/4 x 4 1/8
29000	101C293U063ED2B	10.0	23.0	1 3/4 x 4 5/8
29000	101C293U063BC2B	8.2	26.4	2 x 4 1/8
31000	101C313U063CB2B	8.6	26.9	2 1/2 x 3 1/8
33000	101C333U063EE2B	9.3	24.8	1 3/4 x 5 1/8
34000	101C343U063BD2B	7.2	29.3	2 x 4 5/8
37000	101C373U063EF2B	8.8	26.3	1 3/4 x 5 5/8
39000	101C393U063BE2B	6.5	32.0	2 x 5 1/8
40000	101C403U063CJ2D	7.0	31.4	2 1/2 x 3 5/8
44000	101C443U063BF2B	5.9	34.6	2 x 5 5/8
47000	101C473U063DB2B	9.3	29.0	3 x 3 1/8
48000	101C483U063CC2D	5.6	36.4	2 1/2 x 4 1/8
56000	101C563U063CD2D	5.2	39.5	2 1/2 x 4 5/8
59000	101C593U063DJ2D	7.5	33.8	3 x 3 5/8
65000	101C653U063CE2D	4.6	43.3	2 1/2 x 5 1/8
72000	101C723U063DC2D	6.0	39.5	3 x 4 1/8
73000	101C733U063CF2D	4.2	46.8	2 1/2 x 5 5/8
84000	101C843U063DD2D	5.6	42.5	3 x 4 5/8
97000	101C973U063DE2D	5.0	46.5	3 x 5 1/8
110000	101C114U063DF2D	4.5	50.2	3 x 5 5/8
120000	101C124U063DP2D	4.3	52.0	3 x 5 7/8
160000	101C164U063DN2D	3.6	62.2	3 x 7 5/8
180000	101C184U063DG2D	3.2	68.2	3 x 8 5/8
75 Vdc (100 Vdc Surge)				
2100	101C212U075AK2B	97.3	3.8	1 3/8 x 1 5/8
3600	101C362U075AA2B	67.2	5.3	1 3/8 x 2 1/8
5200	101C522U075AH2B	50.0	7.0	1 3/8 x 2 5/8
6400	101C642U075BA2B	40.7	9.4	2 x 2 1/8
6500	101C652U075EA2B	47.5	8.0	1 3/4 x 2 1/8

Type 101C –55 °C to 105 °C Low-ESR, Wide-Temperature Grade

Cap. (µF)	Catalog Part Number	ESR Max. @ 25 °C 120 Hz (mΩ)	Ripple Max. @ 85°C 120 Hz (A)	Nominal Size D x L (inches)
75 Vdc (100 Vdc Surge)				
6800	101C682U075AB2B	39.3	8.7	1 3/8 x 3 1/8
8400	101C842U075AJ2B	32.5	10.1	1 3/8 x 3 5/8
9400	101C942U075EH2B	34.2	10.2	1 3/4 x 2 5/8
10000	101C103U075AC2B	27.9	11.5	1 3/8 x 4 1/8
10000	101C103U075BH2B	27.4	12.4	2 x 2 5/8
12000	101C123U075EB2B	27.0	12.2	1 3/4 x 3 1/8
12000	101C123U075AD2B	24.5	12.8	1 3/8 x 4 5/8
13000	101C133U075AE2B	22.0	14.0	1 3/8 x 5 1/8
14000	101C143U075BB2B	18.0	16.2	2 x 3 1/8
15000	101C153U075EJ2B	22.4	14.1	1 3/4 x 3 5/8
15000	101C153U075AF2B	20.0	15.2	1 3/8 x 5 5/8
17000	101C173U075CH2B	18.9	17.1	2 1/2 x 2 5/8
17000	101C173U075BJ2B	16.8	17.7	2 x 3 5/8
18000	101C183U075EC2B	18.0	16.5	1 3/4 x 4 1/8
21000	101C213U075ED2B	16.2	18.1	1 3/4 x 4 5/8
21000	101C213U075BC2B	12.7	21.2	2 x 4 1/8
23000	101C233U075CB2B	14.3	20.8	2 1/2 x 3 1/8
24000	101C243U075EE2B	14.8	19.6	1 3/4 x 5 1/8
25000	101C253U075BD2B	12.3	22.4	2 x 4 5/8
27000	101C273U075EF2B	13.9	20.9	1 3/4 x 5 5/8
28000	101C283U075BE2B	11.0	24.6	2 x 5 1/8
29000	101C293U075CJ2B	11.5	24.4	2 1/2 x 3 5/8
32000	101C323U075BF2B	9.9	26.7	2 x 5 5/8
34000	101C343U075DB2B	13.3	24.2	3 x 3 1/8
35000	101C353U075CC2B	8.7	29.4	2 1/2 x 4 1/8
41000	101C413U075CD2D	8.4	30.9	2 1/2 x 4 5/8
43000	101C433U075DJ2B	10.8	28.2	3 x 3 5/8
47000	101C473U075CE2D	7.5	34.0	2 1/2 x 5 1/8
52000	101C523U075DC2D	7.6	35.0	3 x 4 1/8
53000	101C533U075CF2D	6.7	36.9	2 1/2 x 5 5/8
61000	101C613U075DD2D	7.9	35.7	3 x 4 5/8
70000	101C703U075DE2D	6.1	42.0	3 x 5 1/8
79000	101C793U075DF2D	6.0	43.5	3 x 5 5/8
83000	101C833U075DP2D	5.7	45.1	3 x 5 7/8
110000	101C114U075DN2D	4.7	54.7	3 x 7 5/8
130000	101C134U075DG2D	4.1	60.3	3 x 8 5/8
100 Vdc (150 Vdc Surge)				
1300	101C132U100AK2B	116.0	3.5	1 3/8 x 1 5/8
2300	101C232U100AA2B	79.9	4.9	1 3/8 x 2 1/8
3400	101C342U100AH2B	59.4	6.4	1 3/8 x 2 5/8
4100	101C412U100BA2B	47.6	8.7	2 x 2 1/8
4200	101C422U100EA2B	55.0	7.4	1 3/4 x 2 1/8
4400	101C442U100AB2B	46.6	8.0	1 3/8 x 3 1/8
5400	101C542U100AJ2B	38.5	9.3	1 3/8 x 3 5/8
6100	101C612U100EH2B	39.6	9.5	1 3/4 x 2 5/8
6500	101C652U100AC2B	32.9	10.6	1 3/8 x 4 1/8
6500	101C652U100BH2B	32.0	11.4	2 x 2 5/8
7500	101C752U100AD2B	28.9	11.8	1 3/8 x 4 5/8
7900	101C792U100EB2B	31.1	11.4	1 3/4 x 3 1/8
8500	101C852U100AE2B	25.8	12.9	1 3/8 x 5 1/8
8900	101C892U100BB2B	21.0	15.0	2 x 3 1/8
9600	101C962U100AF2B	23.4	14.1	1 3/8 x 5 5/8
9800	101C982U100EJ2B	25.8	13.2	1 3/4 x 3 5/8
11000	101C113U100CH2B	20.7	16.3	2 1/2 x 2 5/8
11000	101C113U100BJ2B	19.5	16.4	2 x 3 5/8
12000	101C123U100EC2B	20.7	15.4	1 3/4 x 4 1/8
14000	101C143U100ED2B	18.6	16.9	1 3/4 x 4 5/8
14000	101C143U100BC2B	14.8	19.7	2 x 4 1/8
15000	101C153U100EE2B	17.0	18.3	1 3/4 x 5 1/8
15000	101C153U100CB2B	16.5	19.4	2 1/2 x 3 1/8
16000	101C163U100BD2B	14.3	20.8	2 x 4 5/8
17000	101C173U100EF2B	15.9	19.6	1 3/4 x 5 5/8
18000	101C183U100BE2B	12.7	22.9	2 x 5 1/8
19000	101C193U100CJ2B	13.3	22.7	2 1/2 x 3 5/8
21000	101C213U100BF2B	11.4	24.9	2 x 5 5/8
22000	101C223U100DB2B	13.8	23.8	3 x 3 1/8
22000	101C223U100CC2B	10.0	27.4	2 1/2 x 4 1/8
26000	101C263U100CD2B	9.7	28.9	2 1/2 x 4 5/8
28000	101C283U100DJ2B	11.2	27.7	3 x 3 5/8
30000	101C303U100CE2D	8.6	31.7	2 1/2 x 5 1/8
34000	101C343U100DC2D	8.5	33.2	3 x 4 1/8
34000	101C343U100CF2D	7.7	34.5	2 1/2 x 5 5/8
39000	101C393U100DD2D	7.9	35.7	3 x 4 5/8
45000	101C453U100DE2D	6.5	40.5	3 x 5 1/8
51000	101C513U100DF2D	6.0	43.5	3 x 5 5/8
54000	101C543U100DP2D	6.0	44.1	3 x 5 7/8
74000	101C743U100DN2D	4.8	54.0	3 x 7 5/8
85000	101C853U100DG2D	4.2	59.2	3 x 8 5/8
150 Vdc (200 Vdc Surge)				
490	101C491U150AK2B	433.0	2.1	1 3/8 x 1 5/8
880	101C881U150AA2B	241.0	3.1	1 3/8 x 2 1/8
1200	101C122U150EA2B	199.0	3.9	1 3/4 x 2 1/8
1300	101C132U150AH2B	163.0	4.0	1 3/8 x 2 5/8
1500	101C152U150BA2B	159.0	4.8	2 x 2 1/8
1700	101C172U150AB2B	125.0	4.9	1 3/8 x 3 1/8
1800	101C182U150EH2B	133.0	5.2	1 3/4 x 2 5/8
1900	101C192U150AJ2B	112.0	5.5	1 3/8 x 3 5/8
2300	101C232U150BH2B	104.0	6.3	2 x 2 5/8
2500	101C252U150EB2B	95.5	6.5	1 3/4 x 3 1/8
2500	101C252U150AC2B	84.9	6.6	1 3/8 x 4 1/8
2700	101C272U150AD2B	80.1	7.1	1 3/8 x 4 5/8
3100	101C312U150AE2B	74.0	7.6	1 3/8 x 5 1/8
3200	101C322U150EJ2B	74.6	7.7	1 3/4 x 3 5/8
3400	101C342U150BB2B	54.6	9.3	2 x 3 1/8
3600	101C362U150AF2B	66.3	8.4	1 3/8 x 5 5/8
3800	101C382U150CH2B	62.8	9.4	2 1/2 x 2 5/8
4000	101C402U150BJ2B	59.7	9.4	2 x 3 5/8
4400	101C442U150EC2B	54.3	9.5	1 3/4 x 4 1/8
4500	101C452U150ED2B	53.1	10.0	1 3/4 x 4 5/8
5200	101C522U150EE2B	45.9	11.1	1 3/4 x 5 1/8

Type 101C –55 °C to 105 °C Low-ESR, Wide-Temperature Grade

Cap. (µF)	Catalog Part Number	ESR Max. @ 25 °C 120 Hz (mΩ)	Ripple Max. @ 85°C 120 Hz (A)	Nominal Size D x L (inches)
5200	101C522U150CB2B	45.9	11.6	2 1/2 x 3 1/8
5200	101C522U150BC2B	45.0	11.3	2 x 4 1/8
5700	101C572U150BD2B	41.9	12.2	2 x 4 5/8
5800	101C582U150EF2B	41.2	12.2	1 3/4 x 5 5/8
6600	101C662U150BE2B	36.2	13.6	2 x 5 1/8
6600	101C662U150CJ2B	36.2	13.8	2 1/2 x 3 5/8
7800	101C782U150DB2B	35.7	14.8	3 x 3 1/8
7900	101C792U150BF2B	30.2	15.3	2 x 5 5/8
8500	101C852U150CC2B	28.1	16.3	2 1/2 x 4 1/8
9400	101C942U150CD2B	25.4	17.8	2 1/2 x 4 5/8
9900	101C992U150DJ2B	28.1	17.5	3 x 3 5/8
11000	101C113U150CE2B	21.7	19.9	2 1/2 x 5 1/8
12000	101C123U150DC2B	23.2	20.1	3 x 4 1/8
13000	101C133U150CF2B	18.4	22.3	2 1/2 x 5 5/8
14000	101C143U150DD2B	19.9	22.5	3 x 4 5/8
16000	101C163U150DE2B	17.4	24.8	3 x 5 1/8
18000	101C183U150DF2B	15.5	27.1	3 x 5 5/8
19000	101C193U150DP2B	14.7	28.2	3 x 5 7/8
26000	101C263U150DN2D	11.3	35.7	3 x 7 5/8
30000	101C303U150DG2D	9.3	40.0	3 x 8 5/8
200 Vdc (275 Vdc Surge)				
380	101C381T200AK2B	454.0	2.0	1 3/8 x 1 5/8
680	101C681T200AA2B	254.0	3.0	1 3/8 x 2 1/8
890	101C891T200EA2B	224.0	3.7	1 3/4 x 2 1/8
980	101C981T200AH2B	176.0	3.9	1 3/8 x 2 5/8
1100	101C112T200BA2B	181.0	4.5	2 x 2 1/8
1300	101C132T200AB2B	133.0	4.8	1 3/8 x 3 1/8
1400	101C142T200EH2B	142.0	5.0	1 3/4 x 2 5/8
1600	101C162T200AJ2B	108.0	5.6	1 3/8 x 3 5/8
1800	101C182T200BH2B	111.0	6.1	2 x 2 5/8
1900	101C192T200EB2B	105.0	6.2	1 3/4 x 3 1/8
1900	101C192T200AC2B	88.9	6.4	1 3/8 x 4 1/8
2200	101C222T200AD2B	90.4	6.7	1 3/8 x 4 5/8
2400	101C242T200EJ2B	82.9	7.3	1 3/4 x 3 5/8
2400	101C242T200BB2B	82.9	7.5	2 x 3 1/8
2500	101C252T200AE2B	79.6	7.4	1 3/8 x 5 1/8
2800	101C282T200AF2B	71.0	8.1	1 3/8 x 5 5/8
3100	101C312T200BJ2B	64.2	9.0	2 x 3 5/8
3400	101C342T200EC2B	58.5	9.1	1 3/4 x 4 1/8
3500	101C352T200ED2B	56.8	9.7	1 3/4 x 4 5/8
4000	101C402T200EE2B	49.7	10.7	1 3/4 x 5 1/8
4000	101C402T200CB2B	49.7	11.2	2 1/2 x 3 1/8
4000	101C402T200BC2B	43.1	11.5	2 x 4 1/8
4400	101C442T200BD2B	45.2	11.7	2 x 4 5/8
4500	101C452T200EF2B	44.2	11.7	1 3/4 x 5 5/8
5000	101C502T200BE2B	39.8	12.9	2 x 5 1/8
5100	101C512T200CJ2B	39.0	13.3	2 1/2 x 3 5/8
6100	101C612T200BF2B	32.6	14.7	2 x 5 5/8
6500	101C652T200CC2B	26.3	16.9	2 1/2 x 4 1/8
7200	101C722T200CD2B	27.6	17.1	2 1/2 x 4 5/8
7600	101C762T200DJ2B	29.7	17.0	3 x 3 5/8

Cap. (µF)	Catalog Part Number	ESR Max. @ 25 °C 120 Hz (mΩ)	Ripple Max. @ 85°C 120 Hz (A)	Nominal Size D x L (inches)
8300	101C832T200CE2B	24.0	19.0	2 1/2 x 5 1/8
9300	101C932T200DC2B	21.4	20.9	3 x 4 1/8
10000	101C103T200CF2B	21.2	20.8	2 1/2 x 5 5/8
11000	101C113T200DD2B	20.5	22.1	3 x 4 5/8
13000	101C133T200DB2B	17.8	20.9	3 x 3 1/8
13000	101C133T200DE2B	17.8	24.5	3 x 5 1/8
14000	101C143T200DF2B	16.9	25.9	3 x 5 5/8
15000	101C153T200DP2B	15.9	27.1	3 x 5 7/8
20000	101C203T200DN2D	12.5	33.9	3 x 7 5/8
23000	101C233T200DG2D	10.4	37.8	3 x 8 5/8
250 Vdc (350 Vdc Surge)				
290	101C291T250AK2B	549.0	1.8	1 3/8 x 1 5/8
530	101C531T250AA2B	300.0	2.7	1 3/8 x 2 1/8
700	101C701T250EA2B	227.0	3.7	1 3/4 x 2 1/8
760	101C761T250AH2B	209.0	3.5	1 3/8 x 2 5/8
890	101C891T250BA2B	164.0	4.7	2 x 2 1/8
990	101C991T250AB2B	161.0	4.3	1 3/8 x 3 1/8
1100	101C112T250EH2B	145.0	5.0	1 3/4 x 2 5/8
1200	101C122T250AJ2B	133.0	5.0	1 3/8 x 3 5/8
1400	101C142T250BH2B	104.0	6.3	2 x 2 5/8
1500	101C152T250AC2B	106.0	5.9	1 3/8 x 4 1/8
1500	101C152T250EB2B	106.0	6.2	1 3/4 x 3 1/8
1700	101C172T250AD2B	101.0	6.3	1 3/8 x 4 5/8
1900	101C192T250AE2B	90.7	6.9	1 3/8 x 5 1/8
1900	101C192T250EJ2B	83.8	7.3	1 3/4 x 3 5/8
1900	101C192T250BB2B	69.8	8.2	2 x 3 1/8
2200	101C222T250AF2B	84.4	7.4	1 3/8 x 5 5/8
2300	101C232T250CH2B	75.0	8.6	2 1/2 x 2 5/8
2300	101C232T250EC2B	69.2	8.4	1 3/4 x 4 1/8
2400	101C242T250BJ2B	58.0	9.5	2 x 3 5/8
2700	101C272T250ED2B	58.9	9.5	1 3/4 x 4 5/8
2900	101C292T250BC2B	50.3	10.7	2 x 4 1/8
3100	101C312T250CB2B	55.6	10.6	2 1/2 x 3 1/8
3100	101C312T250EE2B	51.3	10.5	1 3/4 x 5 1/8
3400	101C342T250BD2B	45.6	11.7	2 x 4 5/8
3500	101C352T250EF2B	45.5	11.6	1 3/4 x 5 5/8
3900	101C392T250BE2B	42.0	12.6	2 x 5 1/8
4000	101C402T250CJ2B	43.1	12.6	2 1/2 x 3 5/8
4500	101C452T250BF2B	38.3	13.6	2 x 5 5/8
4700	101C472T250DB2B	42.3	13.6	3 x 3 1/8
5100	101C512T250CC2B	30.6	15.6	2 1/2 x 4 1/8
5700	101C572T250CD2B	28.9	16.7	2 1/2 x 4 5/8
5900	101C592T250DJ2B	33.7	16.0	3 x 3 5/8
6500	101C652T250CE2B	26.6	18.0	2 1/2 x 5 1/8
7200	101C722T250DC2B	27.6	18.4	3 x 4 1/8
7700	101C772T250CF2B	24.1	19.5	2 1/2 x 5 5/8
8500	101C852T250DD2B	23.4	20.7	3 x 4 5/8
9700	101C972T250DE2B	20.5	22.8	3 x 5 1/8
11000	101C113T250DF2B	18.1	25.0	3 x 5 5/8
12000	101C123T250DP2B	16.6	26.5	3 x 5 7/8
16000	101C163T250DN2D	13.4	32.8	3 x 7 5/8
18000	101C183T250DG2D	11.1	36.7	3 x 8 5/8

Общество с ограниченной ответственностью «МосЧип» ИНН 7719860671 / КПП 771901001
Адрес: 105318, г.Москва, ул.Щербаковская д.3, офис 1107

Данный компонент на территории Российской Федерации

Вы можете приобрести в компании MosChip.

Для оперативного оформления запроса Вам необходимо перейти по данной ссылке:

http://moschip.ru/get-element

Вы можете разместить у нас заказ для любого Вашего проекта, будь то серийное производство или разработка единичного прибора.

В нашем ассортименте представлены ведущие мировые производители активных и пассивных электронных компонентов.

Нашей специализацией является поставка электронной компонентной базы двойного назначения, продукции таких производителей как XILINX, Intel (ex.ALTERA), Vicor, Microchip, Texas Instruments, Analog Devices, Mini-Circuits, Amphenol, Glenair.

Сотрудничество с глобальными дистрибьюторами электронных компонентов, предоставляет возможность заказывать и получать с международных складов практически любой перечень компонентов в оптимальные для Вас сроки.

На всех этапах разработки и производства наши партнеры могут получить квалифицированную поддержку опытных инженеров.

Система менеджмента качества компании отвечает требованиям в соответствии с ГОСТ Р ИСО 9001, ГОСТ РВ 0015-002 и ЭС РД 009

Офис по работе с юридическими лицами:

105318, г.Москва, ул.Щербаковская д.3, офис 1107, 1118, ДЦ «Щербаковский»

Телефон: +7 495 668-12-70 (многоканальный)

Факс: +7 495 668-12-70 (доб.304)

E-mail: info@moschip.ru

Skype отдела продаж:
moschip.ru
moschip.ru_4
moschip.ru_6
moschip.ru_9