THIS DRAWING IS UNPUBLISHED. RELEASED FOR PUBLICATION 2007
© COPYRIGHT 2007 . ALL RIGHTS RESERVED.

| REVISIONS | | | | | |
|---|---|---|---|---|---|
| P | LTR | DESCRIPTION | DATE | DWN | APVD |
| | A14 | Wrong dimensions in area B5-6 corrected to H=4.6 and K=5.1 | 27JUL2010 | Kirs. | Schus |
| | A15 | Design 2 added. | 21DEC2011 | Kirs. | Schus |
| | A16 | Designs adapted. Crimp heigh to PN 962843 added. Drawing corrected. | 01OCT2012 | Kirs. | Merz |
| | A17 | ECR-15-012070 | 13AUG2015 | JBJH | BK |

## STRIP FORM
## Bandware

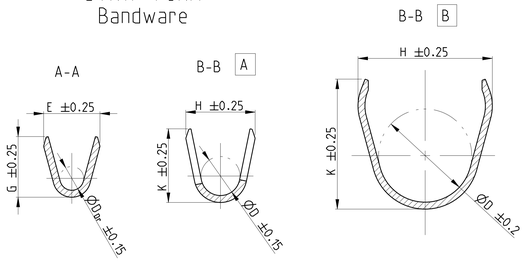


## WIRE CRIMP
## Drahtcrimp

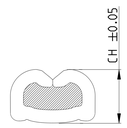


## FLR-/FLK-WIRE
## FLR-/FLK-Leitung

### DESIGN 1
### Ausfuehrung 1

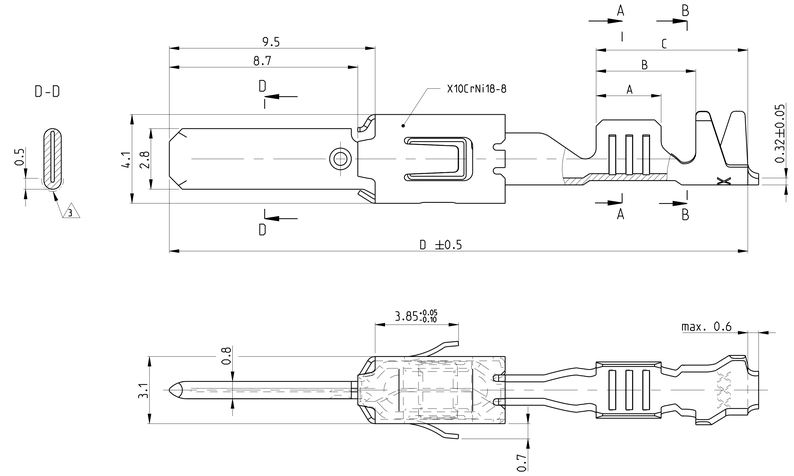


## SINGLE WIRE SEAL
## Einzeldichtungssystem

### DESIGN 4
### Ausfuehrung 4

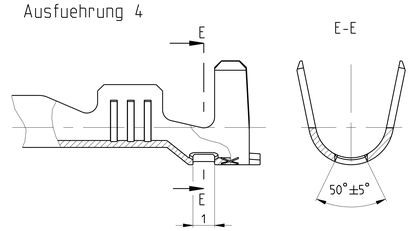


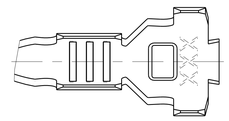

### DESIGN 2
### Ausfuehrung 2

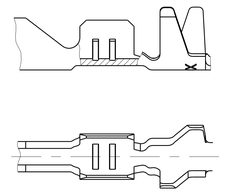

### DESIGN 5
### Ausfuehrung 5

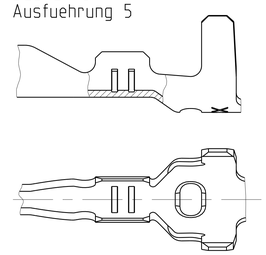

### DESIGN 3
### Ausfuehrung 3

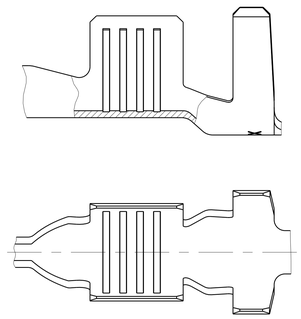

### DESIGN 6
### Ausfuehrung 6

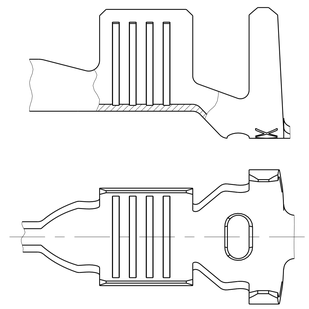

1. CONTACT AREA PRE SILVER MIN. 3µm
CANTILEVER SPRING PLAIN
Kontaktzone vorversilbert min. 3µm
Ueberfeder blank

2. CONTACT BODY Ni-PLATING MIN. 0.5µm; CONTACT AREA PRE-GOLD MIN. 0.6µm
OVER NICKEL; CRIMP AREA PRE-TIN
CANTILEVER SPRING PLAIN
Kontaktkoerper vernickelt min. 0.5µm; Kontaktzone vorvergoldet min. 0.6µm ueber Nickel
Crimpzone vorverzinnt; Ueberfeder blank

3. IN THIS AREA CRACK SHAPING AT THE SURFACE PERMISSIBLE
In diesem Bereich Rissbildung in der Oberflaeche zulaessig

4. PRE-TIN MIN. 1µm; CANTILEVER SPRING PLAIN
vorverzinnt min. 1µm; Ueberfeder blank

5. AWG 12 TXL 828905-1 OR / oder 282536-1
AWG 12 GXL 638865-1

6. ATTENTION! CONSTRUCTION OF THE CONTACT CAVITY IN THE AREA OF THE SINGLE WIRE SEAL IS Ø6.4$^{+0.1}_{-0.05}$
Achtung! Die Kammer ist im Bereich der Einzeldichtung auf Ø6.4$^{+0.1}_{-0.05}$ auszulegen

7. PUNCHED WITH VOLATILIZING STAMPING-OIL
Gestanzt mit verfluechtigendem Stanzoel

| | TE ORDER-NO. STRIPFORM Bandware | REV | DESIGN Ausfuehrung | MATERIAL Werkstoff | SURFACE Oberflaeche | DGB mm² | INSULATIONØ Isolationsø mm | STRIP FORM WIRE CRIMP Drahtcrimp | STRIP FORM INSUL. CRIMP Isolationscrimp Bandware | WIRE CRIMP HEIGTH CH Drahtcrimphoehe CH | APPLICATION TOOL Anschlagwerkzeug | HAND TOOL Handzange | A | B | C | D | TE ORDER-NO. SINGLE WIRE SEAL Einzeldichtungssystem (CAVITY DIAMETER) (Kammerdurchmesser) | TE ORDER-NO. SEALING PLUG Blindstopfen |
|---|---|---|---|---|---|---|---|---|---|---|---|---|---|---|---|---|---|---|
| | | | | | | | | CRIMP DIMENSION mm Crimpabmessungen mm | | | EXTRACTION TOOL Ausdrueckwerkzeug No. 968107-1 | | | | | | | |
| SINGLE WIRE SEAL / Einzeldichtungssystem | 1-1719504-2 | A | 4 | CuSn4 | 1 | 12 AWG | max. 3.0 | E = 4.0<br>G = 4.2<br>$D_{Dr}$ = 2.0 | A H = 5.3<br>K = 5.0<br>D = 3.6 | AWG 12 = 2.0 | 1852291-3 | - | 3.5 | 6.0 | 7.6 | 26.8 | 5 | 828922-1 |
| | 1-1719504-1 | A | 4 | | 4 | | | | | | | | | | | | | |
| | 3-968947-1 | A | 6 | CuSn0.20 | 4 | >2.5 - 4.0 FLR | max. 3.7 | E = 4.5<br>G = 4.7<br>$D_{Dr}$ = 2.3 | B H = 6.2<br>K = 6.0<br>D = 4.3 | 4.0 mm² = 2.25 | MQC APPLICATOR 2-541537-2 | 539635-1 MATRIZE : 539727-2 | 4.3 | 6.9 | 8.5 | 28.5 | 828985 (Ø6.4) 6 | 828986-1 |
| | 2-968947-2 | A | 6 | CuFe | 1 | | | | | | | | | | | | | |
| | 2-968947-1 | A | 6 | | 4 | | | | | | | | | | | | | |
| | 1-968947-2 | A | 6 | CuSn4 | 1 | | | | | | | | | | | | | |
| | 1-968947-1 | A | 6 | | 4 | | | | | | | | | | | | | |
| | 2-962916-3 | E | 4 | CuFe | 2 | >1.0 - 2.5 FLR | max. 3.0 | E = 3.6<br>G = 3.8<br>$D_{Dr}$ = 1.7 | A H = 5.3<br>K = 5.0<br>D = 3.6 | 2.5 mm² = 1.88<br>2.0 mm² = 1.73<br>1.5 mm² = 1.58 | MQC APPLICATOR 2-878560-2 | 734440-1 | 3.5 | 6.0 | 7.6 | 26.8 | 828905 (Ø5.0) | 828922-1 |
| | 2-962916-2 | E | 4 | | 1 | | | | | | | | | | | | | |
| | 2-962916-1 | E | 4 | | 4 | | | | | | | | | | | | | |
| | 1-962916-3 | E | 4 | CuSn4 | 2 | | | | | | | | | | | | | |
| | 1-962916-2 | E | 4 | | 1 | | | | | | | | | | | | | |
| | 1-962916-1 | E | 4 | | 4 | | | | | | | | | | | | | |
| | 2-962915-3 | E | 4 | CuFe | 2 | 0.5 - 1.0 FLR | max. 2.1 | E = 2.6<br>G = 2.9<br>$D_{Dr}$ = 1.2 | A H = 5.0<br>K = 4.8<br>D = 3.3 | 1.0 mm² = 1.36<br>0.75 mm² = 1.27<br>0.5 mm² = 1.18 | MQC APPLICATOR 2-878559-2 | 734438-1 | 3.0 | 5.4 | 7.0 | 26.8 | 828904 (Ø5.0) | |
| | 2-962915-2 | E | 4 | | 1 | | | | | | | | | | | | | |
| | 2-962915-1 | E | 4 | | 4 | | | | | | | | | | | | | |
| | 6-962915-6 | E | 4 | CuSn4 | 7, 2 | | | | | | | | | | | | | |
| | 1-962915-3 | E | 4 | | 2 | | | | | | | | | | | | | |
| | 1-962915-2 | E | 4 | | 1 | | | | | | | | | | | | | |
| | 1-962915-1 | E | 4 | | 4 | | | | | | | | | | | | | |
| | 1-965982-3 | A | 5 | CuSn4 | 2 | 0.2 - 0.5 FLR | max. 2.1 | E = 2.1<br>G = 2.1<br>$D_{Dr}$ = 0.8 | A H = 4.7<br>K = 4.5<br>D = 3.2 | 0.5 mm² = 1.12<br>0.35 mm² = 1.05<br>0.2 mm² = 0.98 | MQC APPLICATOR 2-878558-2 | 539635-1 MATRIZE : 539737-2 | 2.5 | 4.9 | 6.5 | 26.8 | 828904 (Ø5.0) | |
| | 1-965982-1 | A | 5 | | 4 | | | | | | | | | | | | | |
| UNSEALED / ungedichtet | 3-968946-1 | A | 3 | CuSn0.20 | 4 | >2.5 - 4.0 FLR | 2.7 - 3.7 | E = 4.5<br>G = 4.7<br>$D_{Dr}$ = 2.3 | A H = 5.7<br>K = 5.9<br>D = 3.3 | 4.0 mm² = 2.25 | MQC APPLICATOR 2-541534-2 | 539635-1 MATRIZE : 539723-2 | 4.3 | 6.6 | 8.5 | 28.5 | | |
| | 2-968946-2 | A | 3 | CuFe | 1 | | | | | | | | | | | | | |
| | 2-968946-1 | A | 3 | | 4 | | | | | | | | | | | | | |
| | 1-968946-2 | A | 3 | CuSn4 | 1 | | | | | | | | | | | | | |
| | 1-968946-1 | A | 3 | | 4 | | | | | | | | | | | | | |
| | 2-962843-3 | C | 1 | CuFe | 2 | >1.0 - 2.5 FLK | 2.4 - 3.7 | E = 3.6<br>G = 3.8<br>$D_{Dr}$ = 1.7 | A H = 5.5<br>K = 5.7<br>D = 3.2 | 2.5 mm² = 1.88<br>2.0 mm² = 1.73<br>1.5 mm² = 1.58 | MQC APPLICATOR 2-878552-2 | 734417-3 | 3.6 | 5.2 | 8.9 | 28.6 | | |
| | 2-962843-2 | C | 1 | | 1 | | | | | | | | | | | | | |
| | 2-962843-1 | C | 1 | | 4 | | | | | | | | | | | | | |
| | 1-962843-3 | C | 1 | CuSn4 | 2 | | | | | | | | | | | | | |
| | 1-962843-2 | C | 1 | | 1 | | | | | | | | | | | | | |
| | 1-962843-1 | C | 1 | | 4 | | | | | | | | | | | | | |
| | 2-962842-3 | E | 1 | CuFe | 2 | >1.0 - 2.5 FLR | 2.1 - 2.9 | E = 3.6<br>G = 3.8<br>$D_{Dr}$ = 1.7 | A H = 4.3<br>K = 4.5<br>D = 2.6 | 2.5 mm² = 1.88<br>2.0 mm² = 1.73<br>1.5 mm² = 1.58 | MQC APPLICATOR 2-878551-2 | 734417-2 | 3.6 | 5.2 | 8.2 | 27.9 | | |
| | 2-962842-2 | F | 1 | | 1 | | | | | | | | | | | | | |
| | 2-962842-1 | E | 1 | | 4 | | | | | | | | | | | | | |
| | 1-962842-3 | E | 1 | CuSn4 | 2 | | | | | | | | | | | | | |
| | 1-962842-2 | E | 1 | | 1 | | | | | | | | | | | | | |
| | 1-962842-1 | E | 1 | | 4 | | | | | | | | | | | | | |
| | 2-962841-3 | F | 1 | CuFe | 2 | 0.5 - 1.0 FLR | 1.4 - 2.1 | E = 2.6<br>G = 2.8<br>$D_{Dr}$ = 1.1 | A H = 3.2<br>K = 3.4<br>D = 1.8 | 1.0 mm² = 1.36<br>0.75 mm² = 1.27<br>0.5 mm² = 1.18 | MQC APPLICATOR 2-878550-2 | 734417-1 | 3.0 | 4.6 | 7.0 | 26.7 | | |
| | 2-962841-2 | F | 1 | | 1 | | | | | | | | | | | | | |
| | 2-962841-1 | F | 1 | | 4 | | | | | | | | | | | | | |
| | 1-962841-3 | F | 1 | CuSn4 | 2 | | | | | | | | | | | | | |
| | 1-962841-2 | F | 1 | | 1 | | | | | | | | | | | | | |
| | 1-962841-1 | F | 1 | | 4 | | | | | | | | | | | | | |
| | 2-963860-3 | B | 2 | CuFe | 2 | 0.2 - 0.5 FLR | 1.3 - 1.6 | E = 2.1<br>G = 2.1<br>$D_{Dr}$ = 0.8 | A H = 2.9<br>K = 2.9<br>D = 1.4 | 0.5 mm² = 1.12<br>0.35 mm² = 1.05<br>0.2 mm² = 0.98 | MQC APPLICATOR 2-878549-2 | 734538-1 | 2.5 | 3.7 | 5.8 | 25.5 | | |
| | 2-963860-2 | B | 2 | | 1 | | | | | | | | | | | | | |
| | 2-963860-1 | B | 2 | | 4 | | | | | | | | | | | | | |
| | 1-963860-3 | B | 2 | CuSn4 | 2 | | | | | | | | | | | | | |
| | 1-963860-2 | B | 2 | | 1 | | | | | | | | | | | | | |
| | 1-963860-1 | B | 2 | | 4 | | | | | | | | | | | | | |

2:1

| | |
|---|---|
| THIS DRAWING IS A CONTROLLED DOCUMENT. | DWN K.Gerlach 14 JUN1999 |
| DIMENSIONS: mm | CHK M.Bleicher |
| TOLERANCES UNLESS OTHERWISE SPECIFIED: 0 PLC ±.4 ; 1 PLC ±.4 ; 2 PLC ±.4 ; 3 PLC ±.4 ; 4 PLC ±.4 ; ANGLES ±1.5° ; ±0.2 | APVD - |
| MATERIAL - | PRODUCT SPEC 108-18063 |
| FINISH - | APPLICATION SPEC 114-18051 |
| WEIGHT - | Customer Drawing |

TE Connectivity

NAME: PRODUCT GROUP DRAWING FOR TAB 2.8x0.8
Produktgruppenzeichnung fuer Flachstecker 2.8x0.8

| SIZE | CAGE CODE | DRAWING NO | RESTRICTED TO |
|---|---|---|---|
| A0 | 00779 | C-1355052 | - |

SCALE 10:1 SHEET 1 OF 1 REV A17

Общество с ограниченной ответственностью «МосЧип» ИНН 7719860671 / КПП 771901001
Адрес: 105318, г.Москва, ул.Щербаковская д.3, офис 1107

**Данный компонент на территории Российской Федерации**

**Вы можете приобрести в компании MosChip.**

Для оперативного оформления запроса Вам необходимо перейти по данной ссылке:

http://moschip.ru/get-element

Вы можете разместить у нас заказ для любого Вашего проекта, будь то серийное производство или разработка единичного прибора.

В нашем ассортименте представлены ведущие мировые производители активных и пассивных электронных компонентов.

Нашей специализацией является поставка электронной компонентной базы двойного назначения, продукции таких производителей как XILINX, Intel (ex.ALTERA), Vicor, Microchip, Texas Instruments, Analog Devices, Mini-Circuits, Amphenol, Glenair.

Сотрудничество с глобальными дистрибьюторами электронных компонентов, предоставляет возможность заказывать и получать с международных складов практически любой перечень компонентов в оптимальные для Вас сроки.

На всех этапах разработки и производства наши партнеры могут получить квалифицированную поддержку опытных инженеров.

Система менеджмента качества компании отвечает требованиям в соответствии с ГОСТ Р ИСО 9001, ГОСТ РВ 0015-002 и ЭС РД 009

**Офис по работе с юридическими лицами:**

105318, г.Москва, ул.Щербаковская д.3, офис 1107, 1118, ДЦ «Щербаковский»

Телефон: +7 495 668-12-70 (многоканальный)

Факс: +7 495 668-12-70 (доб.304)

E-mail: info@moschip.ru

Skype отдела продаж:
moschip.ru
moschip.ru_4
moschip.ru_6
moschip.ru_9