SIEMENS

IC for Inductive Proximity Switches with Short-Circuit Protection

TCA 505 BG

Pb-free lead plating; RoHS compliant

Bipolar IC

Features

- Wide supply voltage of 3.1 to 4.5 V and 4 to 40 V
- Low current consumption of less than 0.8 mA
- Integrated output stage for up to 60 mA output current
- Short-circuit and overload protection of output stages and external components
- Temperature response of the IC compensates that of the coil
- High noise immunity
- High switching frequencies up to 5 kHz
- Useful extra functions
- Suitable for two-wire AC proximity switches
- Temperature range – 40 to 110 °C

PG-DSO-16-1

Type	Ordering Code	Package
TCA 505 BG	Q67000-A8341	PG-DSO-16-1 (SMD)
TCA 505 B	Q67000-A8342	Chip

Besides its basic functions (oscillator, demodulator and threshold switch), the bipolar monolithic IC TCA 505 B includes a number of useful extra functions that enable high-grade, inductive proximity switches to be designed for an attractive price/performance ratio and with space savings.

Compared to earlier ICs for inductive proximity switches temperature drift, noise immunity and the switching frequency of the IC have been improved.

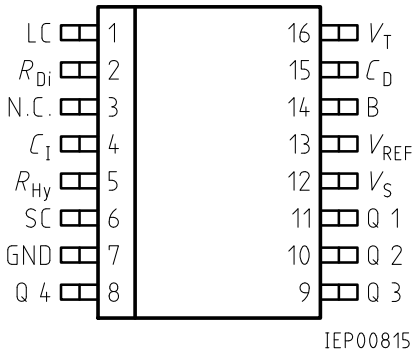

Pin Configurations
(top view)

Pin Definitions and Functions

Pin	Symbol	Function
1	LC	Oscillator
2	R_{Di}	Distance
3	N.C.	Not connected
4	C_I	Integrating capacitance
5	R_{Hy}	Hysteresis
6	SC	Short-circuit detector
7	GND	Ground
8	Q4	Output
9	Q3	Output
10	Q2	Output
11	Q1	Output
12	V_S	Supply voltage
13	V_{REF}	Reference voltage
14	B	Base Output Transistors
15	C_D	Turn-ON delay / Short-circuit delay
16	V_T	Two-wire regulator

Functional Description and Application

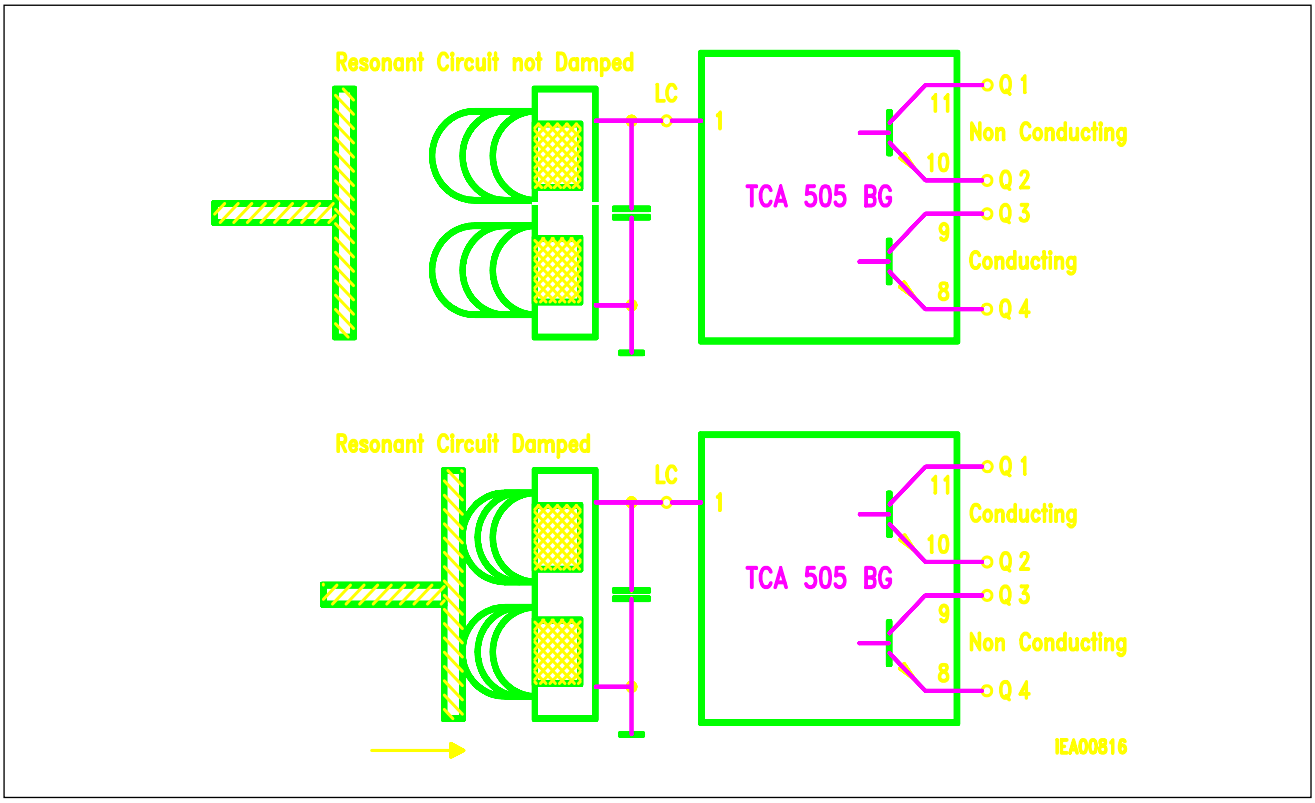

Operation Schematic

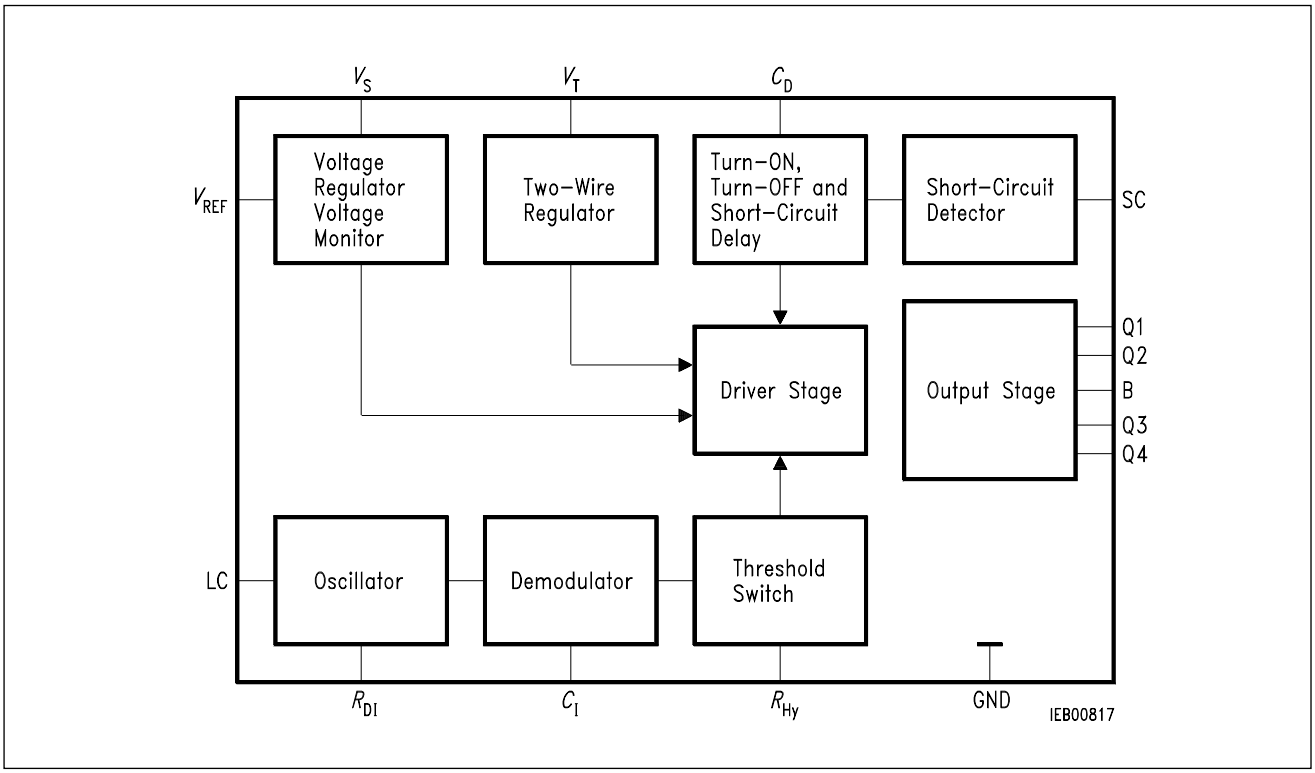

Block Diagram

Functional Description

This circuit is used to design inductive proximity switches. The resonant circuit of the LC oscillator is implemented with an open half-pot ferrite and a capacitor in parallel (pin LC). If a metallic target is moved closer to the open side of the half-pot ferrite, energy is drawn from the resonant circuit and the amplitude of the oscillation is reduced accordingly. This change in amplitude is transmitted to a threshold switch by means of a demodulator and triggers the outputs (**see operation schematic**).

By means of an external distance resistor on the oscillator (pin R_{Di}) it is possible to set the switching distance within wide limits, the optimal distances being 0.1 to 0.6 of the diameter of the half-pot ferrite, although both of these parameters can be exceeded. The circuit also enables the setting of a path hysteresis by switching of the external distance resistor via pin R_{Hy} (**see application circuit 1**).

There are two antiphase output stages (Q1 / Q2 and Q3 / Q4) for max. 50 mA. The output transistors are driven in a floating state thus providing the user with optimal flexibility for evaluation of the output signals. It is therefore possible to use the output transistors either as emitter follower, open-collector, as a current source or in push-pull operation. When pin B is connected to V_{REF}, Q2 and Q4 can be used between 0 V and V_{REF}. The maximum base voltage of the output transistors can be set on pin B. If B is connected to V_{REF}, any constant current up to 50 mA can be set on the outputs by means of resistors on Q2 or Q4 (**see application circuits 2 and 3**).

Q1 through Q4 and also additional external output transistors can be protected against destruction by short-circuit or overload. This is the purpose of pin SC which turns off the output transistors periodically in the presence of overload.

By means of a capacitor on C_D it is possible to set the response delay and the turn-OFF time of short-circuit protection. The same capacitor also defines the turn-ON delay of the output stages when the supply voltage is applied, whereby the output stages are inhibited during buildup of the oscillator. Finally C_D produces a turn-OFF delay of the output stages to prevent the turn-ON delay from running its full length at brief voltage dips on V_S.

A switching regulator is incorporated for the voltage supply of the circuit when it is used as a two-wire AC proximity switch, and this is activated when pin V_T is connected to V_S. The circuit has a stabilized voltage of approx. 2.9 V that is brought out on pin V_{REF}.

Supply-voltage range: The operating range in normal operation is between 4 and 40 V. If pin V_{REF} is connected to V_S, the circuit is operating between 3.1 and 4.5 V. In this case, however, V_{REF} is no longer internally stabilized, i.e. the analog IC functions depend on the operating voltage.

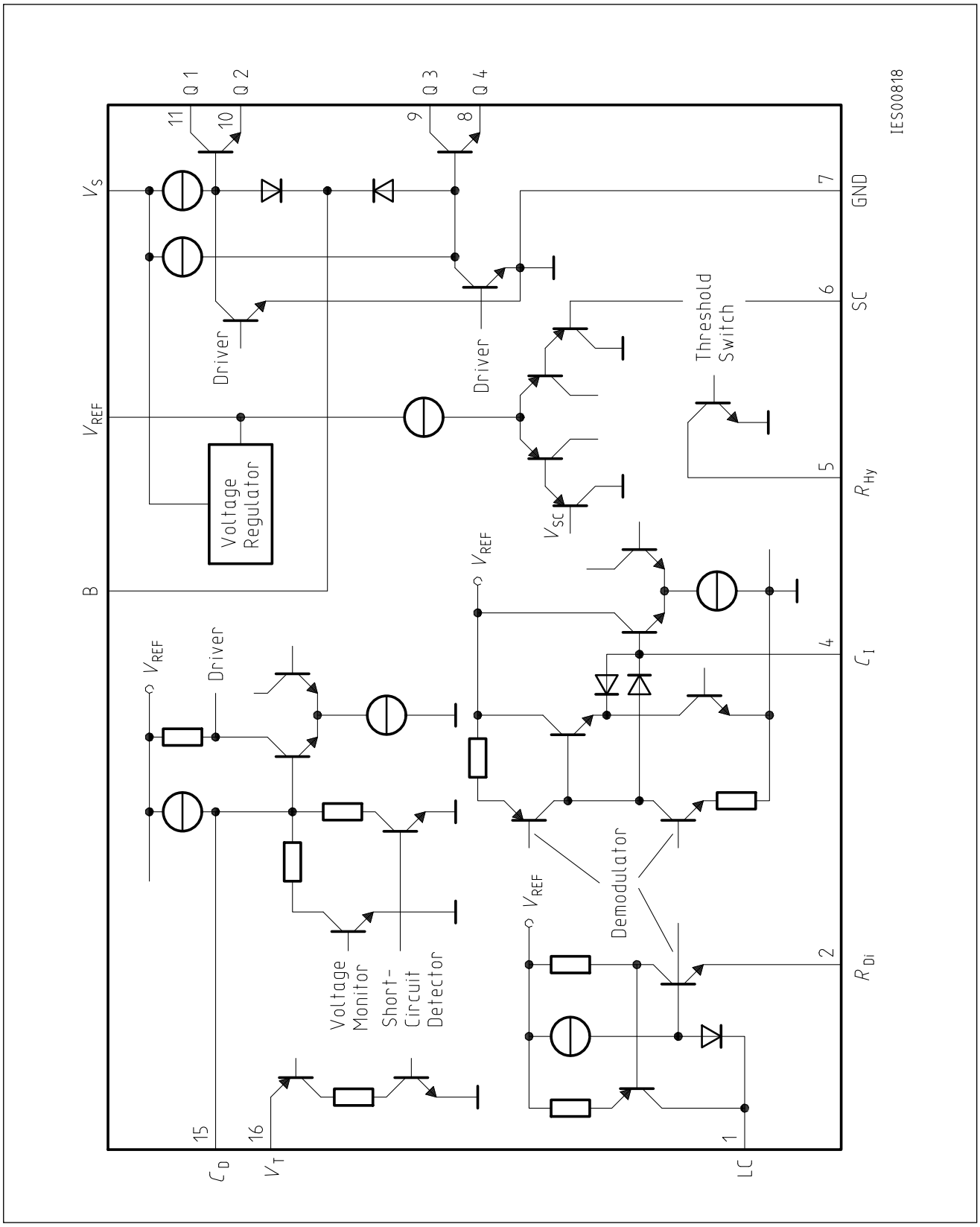

Circuit Diagram (simplified)

Pin Functions

Pin 1; LC

The resonant circuit of the proximity switch is connected between LC and ground.

Pin 2; R_{Di}

A resistor between this pin and ground sets the current in the oscillator circuit. The greater the value of the resistor, the smaller is the current feed from the oscillator into the resonant circuit and the greater therefore is the switching distance. The greater the Q of the resonant circuit, the greater is the value of the distance resistor necessary for setting a certain switching distance.

Pin 4; C_I

C_I can remain open; if high noise immunity is to be achieved however, this pin should be provided with a series RC element (R_I, C_I). If pin C_D is not used, a correctly dimensioned RC element on this pin will also prevent any erroneous pulses on the output when the supply voltage is turned on (**see application circuit 1**).

Pin 5; R_{Hy}

Depending on the status of the circuit, R_{Hy} will be high-impedance or low-impedance to ground (open collector). If the distance resistance (see R_{Di}) is split into two resistors R_{Di} and R_{Hy}, a distance hysteresis can be set by means of R_{Hy}. If series hysteresis is applied, R_{Hy} is connected in series with R_{Di} or shorted. If parallel hysteresis is applied, R_{Hy} is connected in parallel with R_{Di} or made high-impedance (**see application circuit 1**).

Pin 6; SC

SC serves for short-circuit sensing in the output circuit that is to be protected. The current can be sensed referred to ground or V_S. The current sensing is made by a dedicated resistor in the output circuit. For a voltage drop $\geq$ 0.3 V across V_S and SC or across ground and SC, all outputs are turned off after the turn-OFF delay (brief glitches on the outputs or the charging of line capacitances therefore do not trigger the short-circuit protection). After a pause about 200 times the turn-off delay, the outputs turn-ON again. If the short-circuit is still present, the turn-OFF cycle will start up anew.

Both the internal output stages and externally connected output stages can be protected against sustained short-circuits or overload.

A limiting of the output current is an externally connected output stage during the turn-off delay must be ensured. Normally the current limiting by the β of the output transistor is sufficient, meaning that no further circuit devices are called for (**see application circuits**). The outputs Q1 to Q4 are already internally protected against overcurrent so that, in the case of a short-circuit, the current will not exceed 250 mA.

In order to prevent thermal overloads, the current-conducting output is to be connected to pin SC (**see application circuit 4**).

Pins 8, 9, 10, 11; Outputs Q1, Q2, Q3, Q4

Q1 is the open collector, Q2 the open emitter of one output transistor, Q3 the open collector and Q4 the open emitter of the second output transistor in antiphase with the first output transistor (**see operation schematic**). Q1 and Q3 or Q2 and Q4 can be connected in parallel as required. The function of the outputs is ensured when the emitter potential of the output transistors (Q2, Q4) is between 0 V and the voltage on pin B. If B is not connected, the operating range of Q2 and Q4 extends to approx. V_S – 2 V. For current setting on the outputs, **see pin B**.

Pin 12; V_S

Outputs Q1 through Q4 are inhibited as long as the voltage on V_S is below approx. 3.6 V. They are enabled between approx. 3.6 and 4 V, the basic function of the circuit is then ensured. During the turn-ON and turn-OFF of V_S there are consequently no undesirable static states. The operating data and characteristics apply upwards from 4 V. See pin C_D for the avoidance of erroneous pulses during oscillator buildup.

Pin 13; V_{REF}

The internal stabilized voltage of the IC of approx. 2.9 V appears on this pin. A capacitor can be connected between V_{REF} and ground to improve the noise immunity of the overall circuit function. If V_{REF} is connected to V_S, it is possible to operate the circuit in a supply- voltage range of 3.1 through 4.5 V. In this case V_{REF} is no longer stabilized. The analog functions of the circuit e.g. switching distance, however, are then dependent on the supply voltage.

Pin 14; B

This pin serves for limiting the base voltage of the internal output-stage transistors. If this pin is connected to V_{REF} for example, it is possible to set a constant output current ($I_Q = V_{REF}$ / external resistor) that is independent of the supply voltage by means of an external resistor across Q2 (or Q4) and ground (watch out for power dissipation!).

Pin 15; C_D

A capacitor on this pin delays the activation of the outputs after the supply voltage is applied (turn-ON delay). In this way erroneous pulses are prevented on the output during buildup of the oscillator.

If V_S falls to less than 3.6 to 4 V, the outputs are not inhibited until after a turn-OFF delay time, this also being determined by C_D. In this way the delayed turn-ON operation described above is suppressed if there are just short glitches (voltage dips) on V_S. This is of particular advantage for large core diameters, because in such cases a relativity long turn-ON delay has to be selected and the delayed twin-on operation would otherwise be activated each time there was a brief voltage dip.

The capacitor C_D also sets the turn-off delay and the pause duration in short-circuit operation. The sample / pause ratio is approx. 1:200 (**see pin SC**).

If these functions can be dispensed with, C_D can remain open.

Pin 16; V_T

If this pin is connected to + V_S, the supply voltage of the IC (when used as a two-wire proximity switch) can be generated by switching the outputs. The quiescent current can then be kept low. This mode is primarily suitable for AC switches with power supply by phase-control.

The switching of the outputs is made in a V_S range of 6 to 8 V. At 8 V the outputs are turned on, until V_S falls to 6 V. At 6 V the outputs are inhibited, until V_S again reaches 8 V. In this mode V_S should not exceed 14 V or fall below 4 V.

Absolute Maximum Ratings
T_A = – 40 to 110 ˚C

Parameter	Symbol	Limit Values		Unit	Test Condition
		min.	max.		
Supply voltage	V_S	– 0.3	42	V	
Output voltages B open B connected	V_{Q1}; V_{Q3} V_{Q2}; V_{Q4} V_{Q2}; V_{Q4}	– 1 – 1 – 1	41 V_S + 1 V_B	V V V	V_{Q2}; $V_{Q4} \leq V_S$ V_{Q2}; V_{Q1}; V_{Q4} < V_{Q3}
Output currents	I_{Q1}; I_{Q3} – I_{Q2}; – I_{Q4}	0 0	60 60	mA mA	does not apply to shortcircuit
Voltage on V_T	V_T	– 0.3	14	V	
Current on V_{REF}	– I_{REF}	0	100	µA	
Voltage on SC	V_{SC}	0	V_S	V	
Current from R_{Di}	– I_{RDi}	0	2	mA	
Current to R_{Hys}	I_{RHy}	0	2	mA	
Voltage on B	V_{SB}	– 0.3	V_S	V	
Storage temperature	T_{stg}	– 55	110	˚C	
Thermal resistance (system - air)	$R_{th\ SA}$		110	K/W	PG-DSO-16-1
Junction temperature	T_j T_j		110 150	˚C ˚C	 max. 70.000 h
Capacitor	C_V		50	nF	applies to short-circuit at the TCA 505 B only

Operating Range

Supply voltage	V_S	4 3.1	40 4.5	V V	 $V_{REF} = V_S$
Ambient temperature	T_A	– 40	110	˚C	
Distance and Hysteresis resistance R_{Di} and R_{Hy} in series R_{Di} and R_{Hy} parallel	 R_{Di} R_{Hy} R_{Di}/R_{Hy}	 300 0 300		 Ω Ω	
Output voltage on Q2, Q4 B open B connected	 V_{Q2}; V_{Q4} V_{Q2}; V_{Q4}	 – 0.3 – 0.3	 V_S – 2 V_B	 V V	

Only the circuitry provided for passive components may be connected to pins LC, R_{Di}, C_I, C_D

Characteristics
4 V ≤ V_S ≤ 40 V; T_A = – 40 to 110 °C

Parameter	Symbol	Limit Values			Unit	Test Circuit
		min.	typ.	max.		
Power Supply (V_S)						
Current consumption Normal mode (S1 = S2 = OFF) Two-wire operation S1 = ON, S2 = OFF 4 V ≤ V_S ≤ 12 V	 I_S I_S		 550 625	 740 840	 µA µA	 1 1
Turn-ON threshold (outputs active) S1 = OFF	V_{TON1}		3.64	4	V	1
Turn-OFF threshold (outputs disabled) S1 = OFF	V_{TOFF1}	3.0	3.6		V	1
Hysteresis $V_{TON1} - V_{TOFF1}$ S1 = OFF	ΔV_{Hy1}		40		mV	1
Oscillator (LC, R_{Di})						
Oscillator frequency	f_{OSC}			3	MHz	1
Oscillator amplitude	A_{OSC}		0.8		V_{pp}	1
Demodulator, Threshold Switch (C_I, R_{Hy})						
Threshold on C_I	V_{CI}		2		V	1
Hysteresis on C_I	V_{HyCI}		0.8		V	1
Current in C_I	I_{CI}		7		µA	1
Current from C_I	$-I_{CI}$		6		µA	1
Switching frequency C_I < 50 pF	f_S		5		kHz	1 (L = 70 µH)
Reference Voltage (V_{REF}); Base Output Transistors						
Reference voltage I_{REF} = 0 to 100 µA	V_{REF}	2.65	2.9	3.10	V	
Offset voltage $V_B = V_{Q2, 4}$ $V_B = V_{REF}$; $I_{Q2, 4}$ = 5 mA	V_{OB}		110	155	mV	1

Characteristics (cont'd)
4 V ≤ V_S ≤ 40 V; T_A = – 40 to 110 °C

Parameter	Symbol	Limit Values			Unit	Test Circuit
		min.	typ.	max.		
Two-Wire Regulator (V_T)						
Turn-ON threshold (outputs active) S1 = ON	V_{TON2}	6.7	8	9.3	V	1
Turn-ON threshold (outputs disabled) S1 = ON	V_{TOFF2}	5.0	6	7.0	V	1
Hysteresis V_{TON2} – V_{TOFF2}, S1 = ON	ΔHy_2	1.6	2	2.4	V	1
Turn-ON, Turn-OFF and Short-Circuit Delay (C_D)						
Turn-ON delay S1 = OFF	t_{DON}	0.49	0.65	0.82	ms/nF	2
Turn-OFF delay S1 = OFF; V_S ≥ 3.6 V	t_{VA}	17.0	25	34.0	µs/nF	2
Shortcircuit turn-off delay S1 = OFF	t_{SC}	1.70	2.5	3.40	µs/nF	2
Shortcircuit pause S1 = OFF	t_P	0.36	0.5	0.65	ms/nF	2
Outputs (Q1, Q2, Q3, Q4)						
Residual voltage Q1-Q2, Q3-Q4 SQ2 0-1 = ON, SQ4 0-1 = ON S1 = OFF	V_{QRes}					
I_Q = 5 mA	V_{QR}		0.10	0.14	V	1
I_Q = 60 mA	V_{QR}		0.5	0.99	V	1
I_Q = 60 mA	V_{QR}	V_S – 2.2	V_S –1.8		V	1
Reverse current on Q1, 3	I_{QR}			10	µA	
Residual current on Q2, 4*) Q2, 4 conducting but Q1, 3 open	I_{Qres}			50	µA	1
In case of short-circuit output current	I_{QSC}		300	500	mA	1
Shortcircuit Detector (SC)						
Trigger level ref. to V_S, S1 = OFF	V_{SCS}	0.255	0.3	0.345	V	1
Trigger current S1 = OFF	I_{SCS}			30	µA	1
Trigger level ref. to ground S1 = OFF	V_{SCO}	0.255	0.3	0.345	V	1
Trigger current S1 = OFF	– I_{SCO}			6	µA	1

Diagrams

Temperature Response of Switching Point

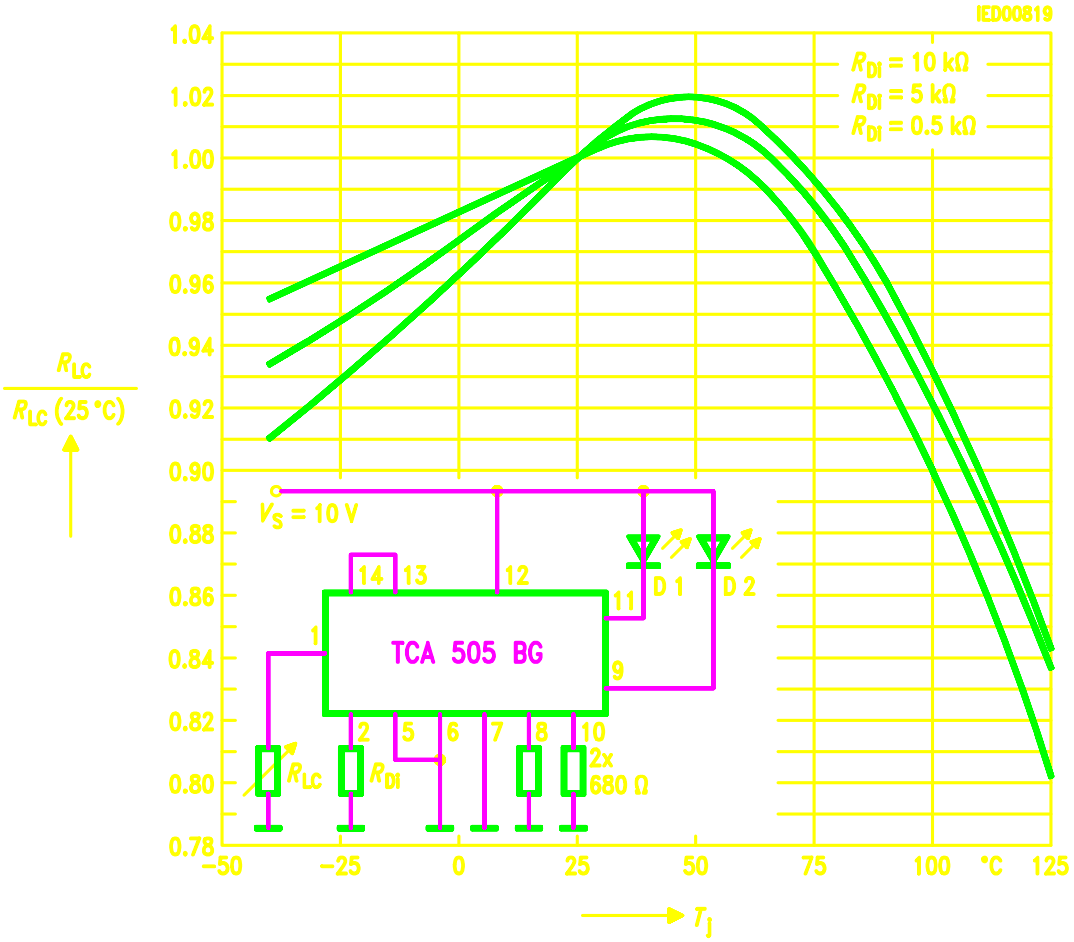

Resistor R_{LC} is set in each case so that the TCA 505 B just switches from D2 to D1. In this way the TCA 505 B, together with a suitably dimensioned resonant circuit, can form a proximity switch that exhibits a very good temperature coefficient (± 2.5 %) over the entire temperature range and without any kind of extra external wiring.

Diagrams

Reference Voltage versus Junction Temperature T_j

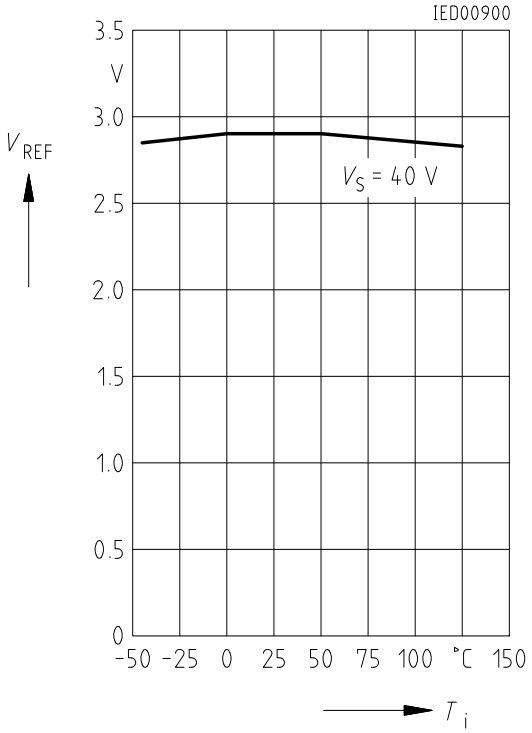

Current Consumption versus Junction Temperature T_j

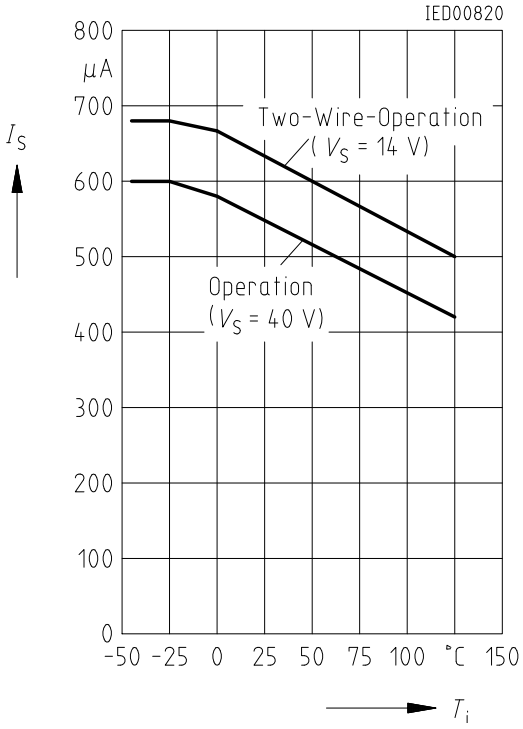

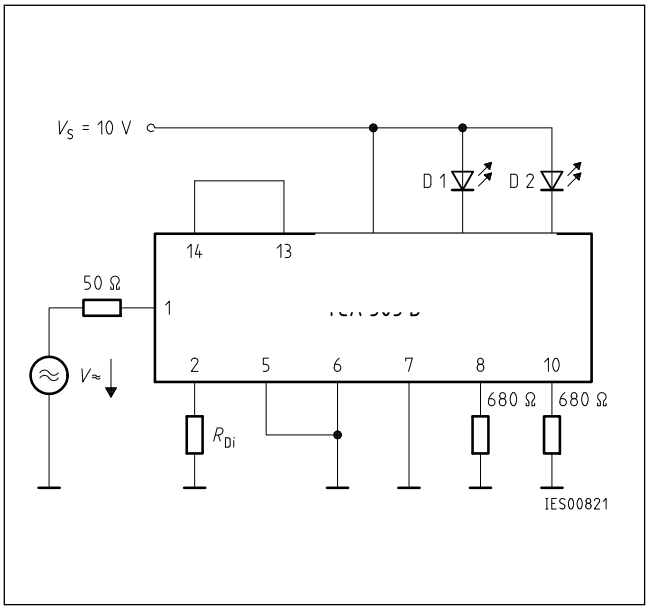

Switching Amplitude versus Frequency f

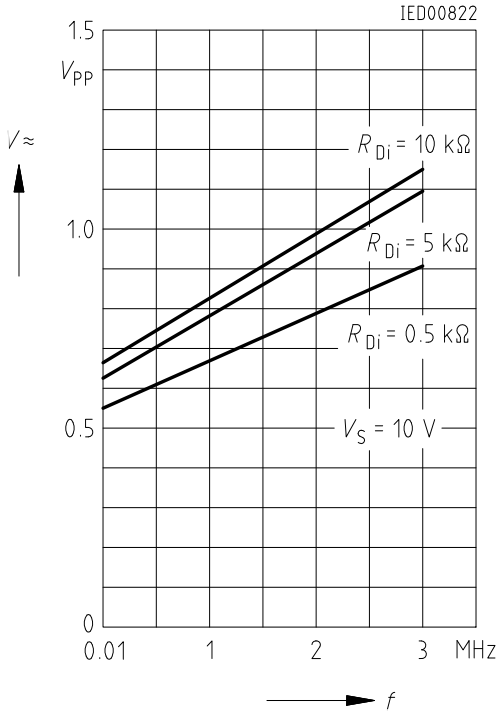

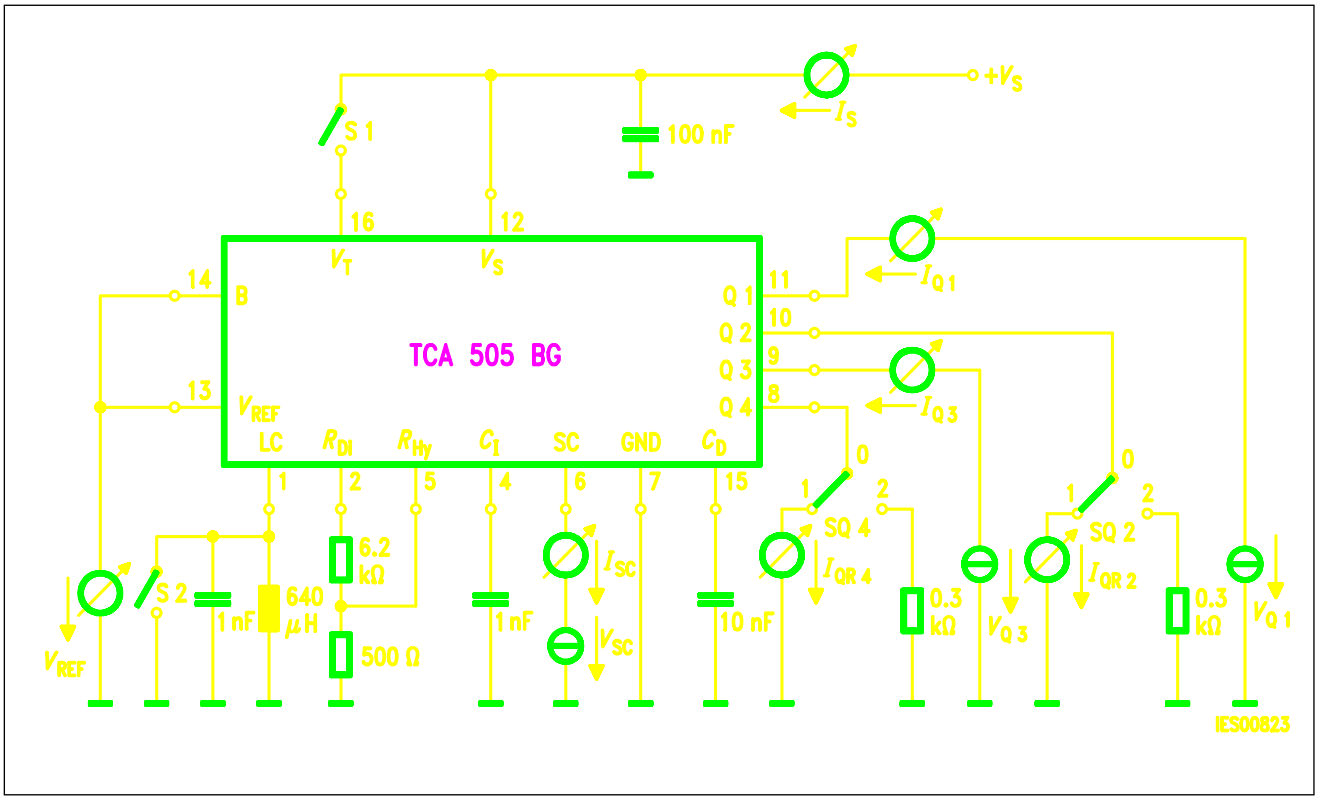

Test Circuit 1

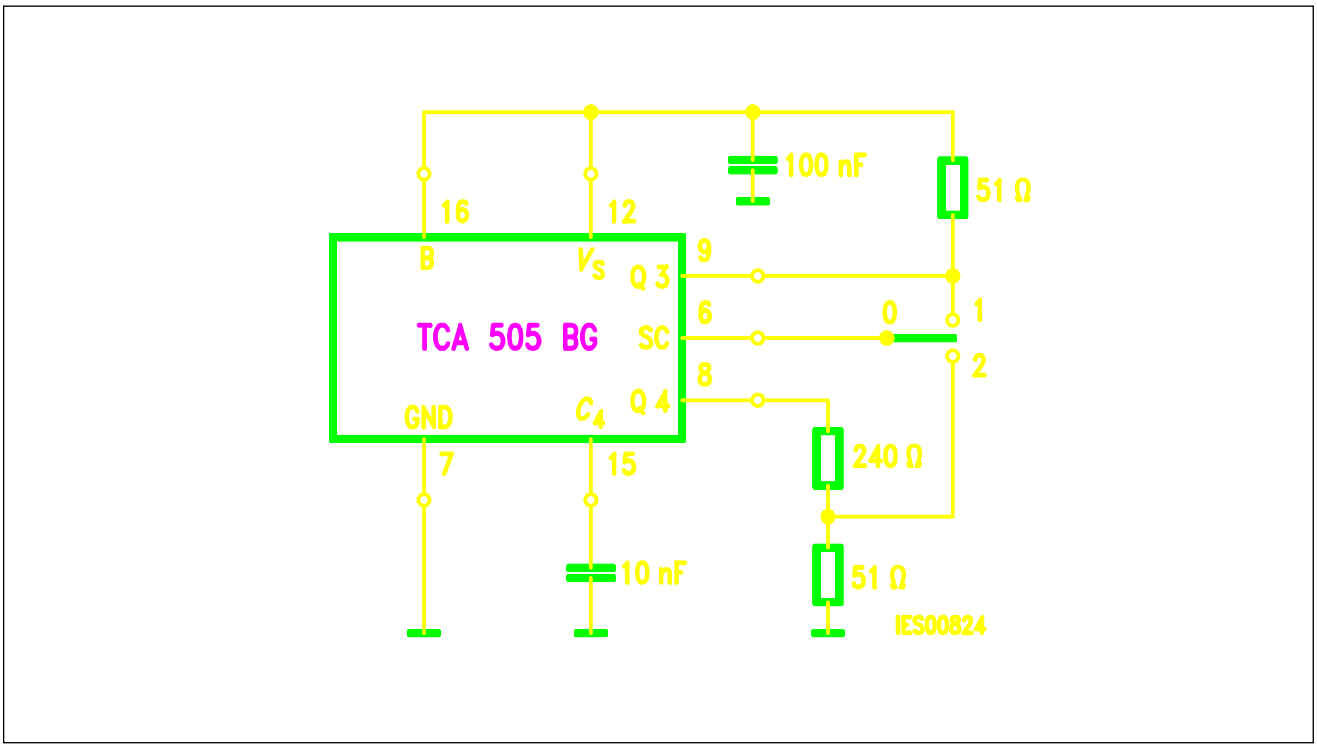

Test Circuit 2

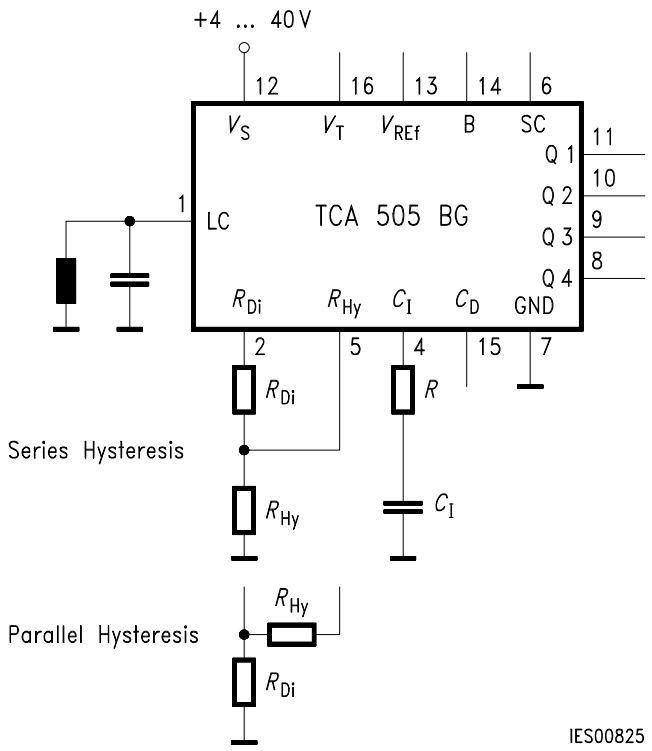

For explanation see under "Pin Function"

Application Circuit 1
Input Circuitry (Use of pins LC, R_{Di}, R_{Hy}, C_I)

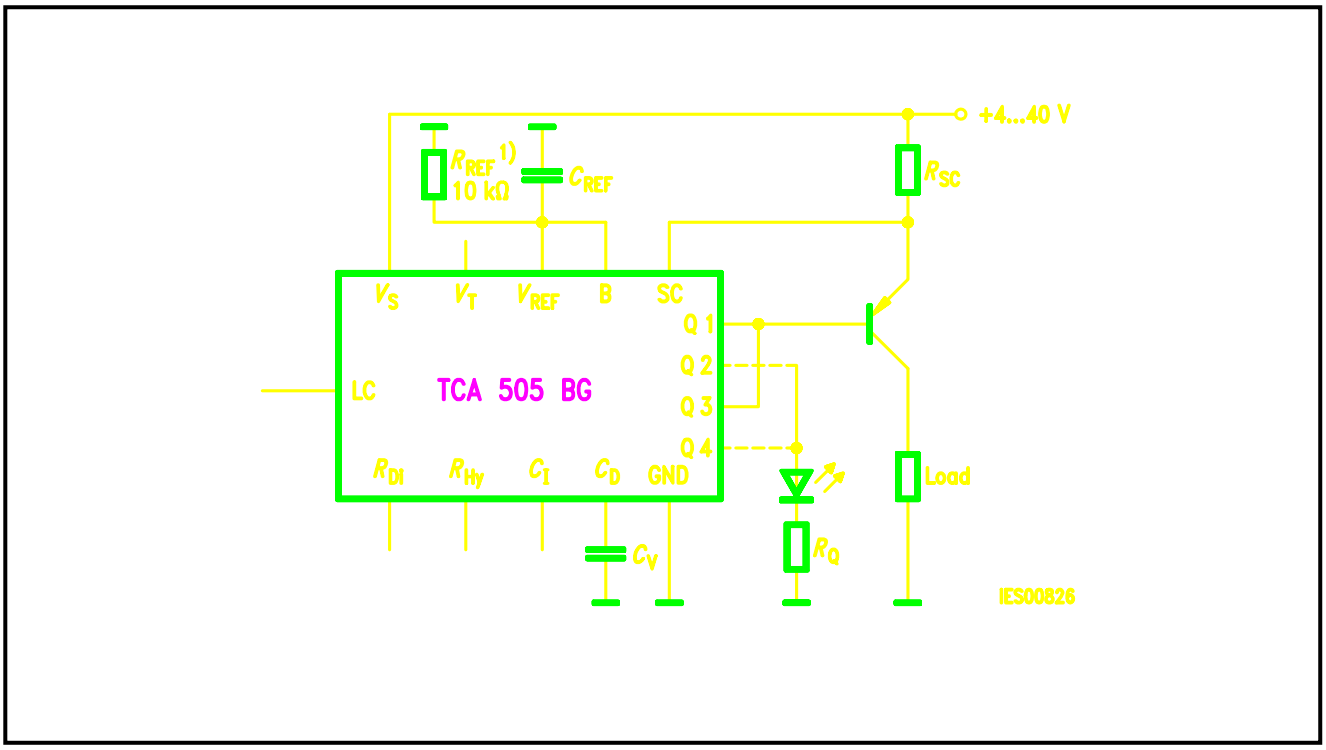

Application Circuit 2
Output Circuitry (Use of pins V_{REF}, B, SC, Q1 through Q4, C_D)

P-switch, short-circuit-proof, LED indicator, configurable as normally closed or normally open

Short-circuit-current sampling: $$R_{SC} = \frac{0.3\ \text{V}}{\text{max. load current}}$$

Constant base current: [1] $$R_Q = \frac{2.9\ \text{V} - V_{LED}}{\text{max. base current}}$$

For dimensioning of C_D **see characteristics.** C_D is usually between 1 and 10 nF. Filtering of V_{REF} is for noise immunity. C_{REF} can be 10 nF for example.

[1] When I_Q > 10 mA, a resistor R_{REF} on pin V_{REF} will improve the constant current operation.

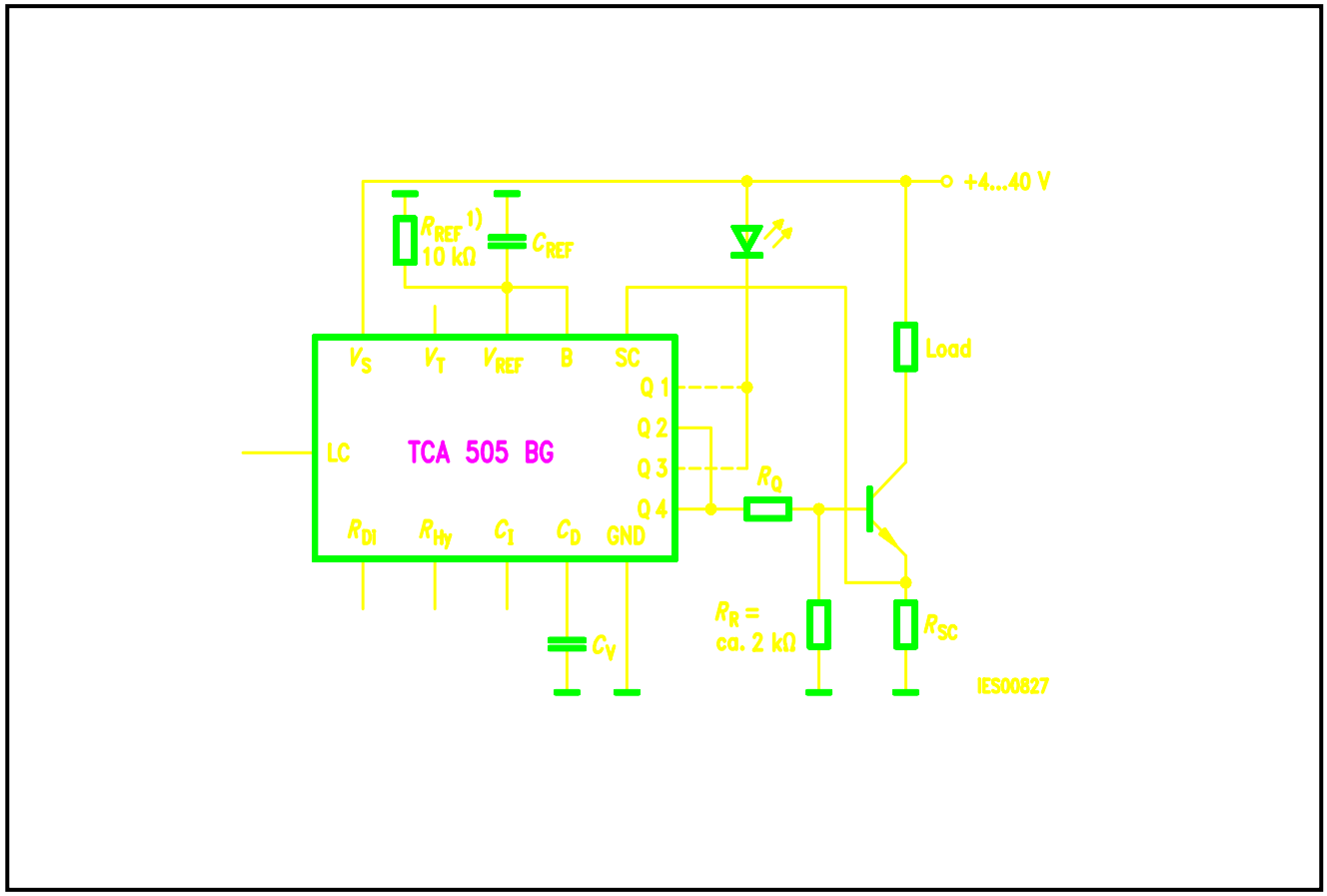

Application Circuit 3
Output Circuitry (Use of pins V_{REF}, B, SC, Q1 through Q4, C_D)

N-switch, short-circuit-proof, LED indicator, configurable as normally closed or normally open

Short-circuit-current sampling: $$R_{SC} = \frac{0.3\ \text{V}}{\text{max. load current}}$$

Constant base current: [1] $$R_Q = \frac{2\ \text{V}}{\text{max. base current} + I_{RR}}$$

For dimensioning of C_D **see characteristics**. C_D is usually between 1 and 10 nF. Filtering of V_{REF} is for noise immunity. C_{REF} can be 10 nF for example. R_{REF} serves for discharging residual current of outputs Q2, 4.

[1] When I_Q > 10 mA, a resistor R_{REF} on pin V_{REF} will improve the constant current operation.

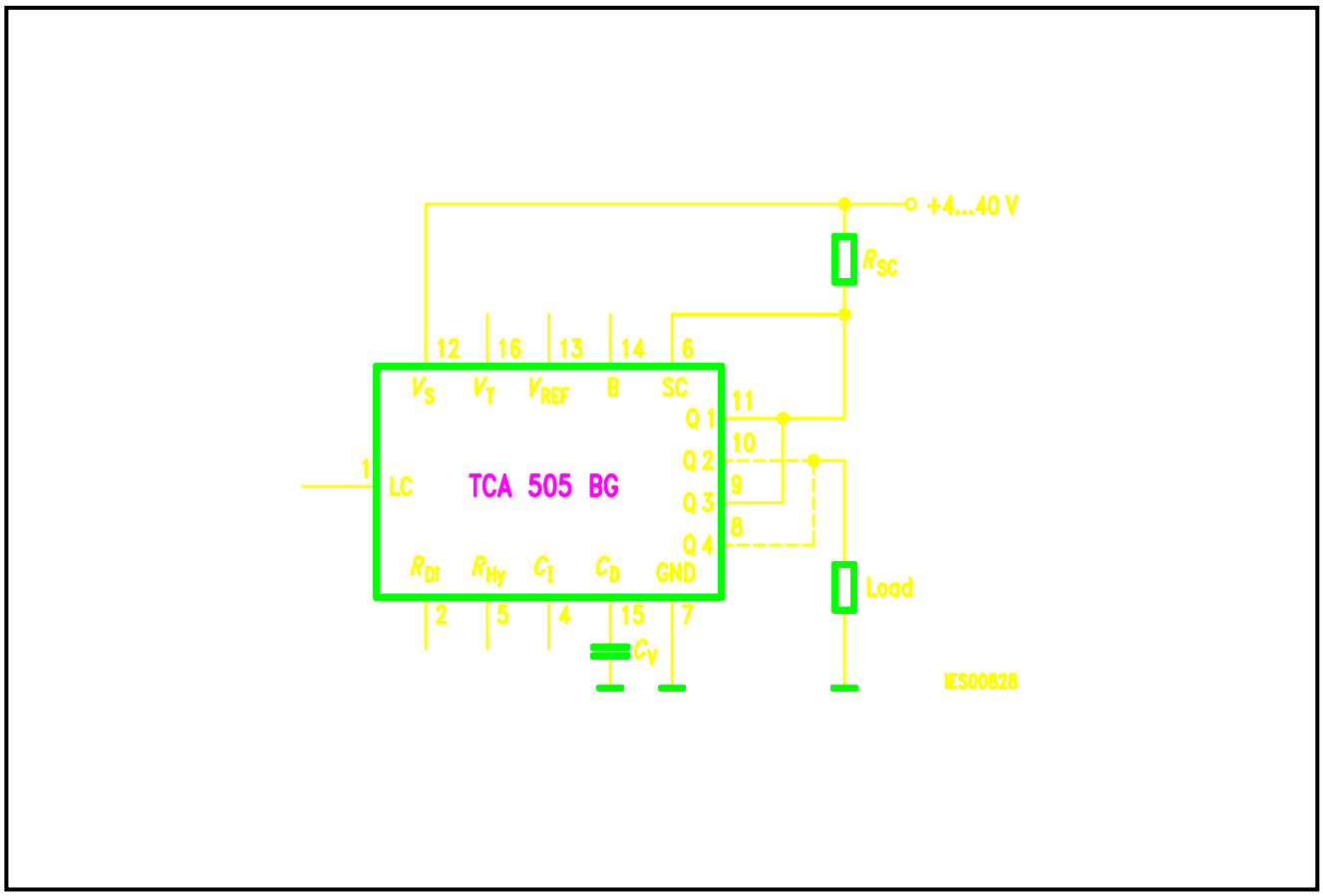

Application Circuit 4
Output Circuitry (Use of pins SC, Q1 to Q4, C_D)

P-switch, short-circuit-proof, configurable as normally closed or normally open

Short-circuit-current sampling: $$R_{SC} = \frac{0.3\ \text{V}}{\text{max. load current}}$$

During the sampling time, the short-circuit current within the IC is limited to a maximum of 250 mA. For dimensioning of C_V, **see characteristics**. C_D is usually between 1 and 10 nF.

Общество с ограниченной ответственностью «МосЧип» ИНН 7719860671 / КПП 771901001
Адрес: 105318, г.Москва, ул.Щербаковская д.3, офис 1107

Данный компонент на территории Российской Федерации

Вы можете приобрести в компании MosChip.

Для оперативного оформления запроса Вам необходимо перейти по данной ссылке:

http://moschip.ru/get-element

Вы можете разместить у нас заказ для любого Вашего проекта, будь то серийное производство или разработка единичного прибора.

В нашем ассортименте представлены ведущие мировые производители активных и пассивных электронных компонентов.

Нашей специализацией является поставка электронной компонентной базы двойного назначения, продукции таких производителей как XILINX, Intel (ex.ALTERA), Vicor, Microchip, Texas Instruments, Analog Devices, Mini-Circuits, Amphenol, Glenair.

Сотрудничество с глобальными дистрибьюторами электронных компонентов, предоставляет возможность заказывать и получать с международных складов практически любой перечень компонентов в оптимальные для Вас сроки.

На всех этапах разработки и производства наши партнеры могут получить квалифицированную поддержку опытных инженеров.

Система менеджмента качества компании отвечает требованиям в соответствии с ГОСТ Р ИСО 9001, ГОСТ РВ 0015-002 и ЭС РД 009

Офис по работе с юридическими лицами:

105318, г.Москва, ул.Щербаковская д.3, офис 1107, 1118, ДЦ «Щербаковский»

Телефон: +7 495 668-12-70 (многоканальный)

Факс: +7 495 668-12-70 (доб.304)

E-mail: info@moschip.ru

Skype отдела продаж:
moschip.ru
moschip.ru_4
moschip.ru_6
moschip.ru_9