Document Number S9KEA128P80M48SF0
Rev. 5, 09/2019

S9KEA128P80M48SF0

KEA128 Sub-Family Data Sheet

Supports the following:
S9KEAZ64AMLK(R),
S9KEAZ128AMLK(R),
S9KEAZ64AVLK(R),
S9KEAZ128AVLK(R),
S9KEAZ64ACLK(R),
S9KEAZ128ACLK(R),
S9KEAZ64AMLH(R),
S9KEAZ128AMLH(R),
S9KEAZ64AVLH(R),
S9KEAZ128AVLH(R),
S9KEAZ64ACLH(R) and
S9KEAZ128ACLH(R)

Key features

- Operating characteristics
  - Voltage range: 2.7 to 5.5 V
  - Flash write voltage range: 2.7 to 5.5 V
  - Temperature range (ambient): -40 to 125°C
- Performance
  - Up to 48 MHz Arm® Cortex-M0+ core
  - Single cycle 32-bit x 32-bit multiplier
  - Single cycle I/O access port
- Memories and memory interfaces
  - Up to 128 KB flash
  - Up to 16 KB RAM
- Clocks
  - Oscillator (OSC) - supports 32.768 kHz crystal or 4 MHz to 24 MHz crystal or ceramic resonator; choice of low power or high gain oscillators
  - Internal clock source (ICS) - internal FLL with internal or external reference, 37.5 kHz pre-trimmed internal reference for 48 MHz system clock
  - Internal 1 kHz low-power oscillator (LPO)
- System peripherals
  - Power management module (PMC) with three power modes: Run, Wait, Stop
  - Low-voltage detection (LVD) with reset or interrupt, selectable trip points
  - Watchdog with independent clock source (WDOG)
  - Programmable cyclic redundancy check module (CRC)
  - Serial wire debug interface (SWD)
  - Aliased SRAM bitband region (BIT-BAND)
  - Bit manipulation engine (BME)
- Security and integrity modules
  - 80-bit unique identification (ID) number per chip
- Human-machine interface
  - Up to 57 general-purpose input/output (GPIO)
  - Up to 37 general-purpose input/output (GPIO)
  - Up to 22 general-purpose input/output (GPIO)
  - Up to 14 general-purpose input/output (GPIO)
  - Up to 71 general-purpose input/output (GPIO)
  - Two 32-bit keyboard interrupt modules (KBI)
  - External interrupt (IRQ)

NXP reserves the right to change the production detail specifications as may be required to permit improvements in the design of its products.

- Analog modules
  - One up to 16-channel 12-bit SAR ADC, operation in Stop mode, optional hardware trigger (ADC)
  - Two analog comparators containing a 6-bit DAC and programmable reference input (ACMP)
- Timers
  - One 6-channel FlexTimer/PWM (FTM)
  - Two 2-channel FlexTimer/PWM (FTM)
  - One 2-channel periodic interrupt timer (PIT)
  - One pulse width timer (PWT)
  - One real-time clock (RTC)
- Communication interfaces
  - Two SPI modules (SPI)
  - Up to three UART modules (UART)
  - Two I2C modules (I2C)
  - One MSCAN module (MSCAN)
- Package options
  - 80-pin LQFP
  - 64-pin LQFP

Table of Contents

1 Ordering parts....4
1.1 Determining valid orderable parts....4
2 Part identification....4
2.1 Description....4
2.2 Format....4
2.3 Fields....4
2.4 Example....5
3 Ratings....5
3.1 Thermal handling ratings....5
3.2 Moisture handling ratings....5
3.3 ESD handling ratings....6
3.4 Voltage and current operating ratings....6
4 General....7
4.1 Nonswitching electrical specifications....7
4.1.1 DC characteristics....7
4.1.2 Supply current characteristics....13
4.1.3 EMC performance....15
4.2 Switching specifications....15
4.2.1 Control timing....15
4.2.2 FTM module timing....16
4.3 Thermal specifications....17
4.3.1 Thermal characteristics....17
5 Peripheral operating requirements and behaviors....19
5.1 Core modules....19
5.1.1 SWD electricals....19
5.2 External oscillator (OSC) and ICS characteristics....20
5.3 NVM specifications....22
5.4 Analog....23
5.4.1 ADC characteristics....23
5.4.2 Analog comparator (ACMP) electricals....25
5.5 Communication interfaces....26
5.5.1 SPI switching specifications....26
5.5.2 MSCAN....29
6 Dimensions....29
6.1 Obtaining package dimensions....29
7 Pinout....30
7.1 Signal multiplexing and pin assignments....30
8 Revision History....30

1 Ordering parts

1.1 Determining valid orderable parts

Valid orderable part numbers are provided on the web. To determine the orderable part numbers for this device, go to **nxp.com** and perform a part number search for the following device numbers: KEAZ128.

2 Part identification

2.1 Description

Part numbers for the chip have fields that identify the specific part. You can use the values of these fields to determine the specific part you have received.

2.2 Format

Part numbers for this device have the following format:

Q B KEA A C FFF M T PP N

2.3 Fields

This table lists the possible values for each field in the part number (not all combinations are valid):

Field	Description	Values
Q	Qualification status	• S = Automotive qualified • P = Prequalification
B	Memory type	• 9 = Flash
KEA	Kinetis Auto family	• KEA
A	Key attribute	• Z = M0+ core • F = M4 W/ DSP & FPU • C= M4 W/ AP + FPU
C	CAN availability	• N = CAN not available • (Blank) = CAN available

Table continues on the next page...

Field	Description	Values
FFF	Program flash memory size	• 128 = 128 KB
M	Maskset revision	• A = 1st Fab version • B = Revision after 1st version
T	Temperature range (°C)	• C = –40 to 85 • V= –40 to 105 • M = –40 to 125
PP	Package identifier	• LH = 64 LQFP (10 mm x 10 mm) • LK = 80 LQFP (14 mm x 14 mm)
N	Packaging type	• R = Tape and reel • (Blank) = Trays

2.4 Example

This is an example part number:

S9KEAZ128AMLK

3 Ratings

3.1 Thermal handling ratings

Symbol	Description	Min.	Max.	Unit	Notes
T_{STG}	Storage temperature	–55	150	°C	1
T_{SDR}	Solder temperature, lead-free	—	260	°C	2

1. Determined according to JEDEC Standard JESD22-A103, *High Temperature Storage Life*.
2. Determined according to IPC/JEDEC Standard J-STD-020, *Moisture/Reflow Sensitivity Classification for Nonhermetic Solid State Surface Mount Devices*.

3.2 Moisture handling ratings

Symbol	Description	Min.	Max.	Unit	Notes
MSL	Moisture sensitivity level	—	3	—	1

1. Determined according to IPC/JEDEC Standard J-STD-020, *Moisture/Reflow Sensitivity Classification for Nonhermetic Solid State Surface Mount Devices*.

3.3 ESD handling ratings

Symbol	Description	Min.	Max.	Unit	Notes
V_{HBM}	Electrostatic discharge voltage, human body model	–6000	+6000	V	1
V_{CDM}	Electrostatic discharge voltage, charged-device model	–500	+500	V	2
I_{LAT}	Latch-up current at ambient temperature of °C	–100	+100	mA	3

1. Determined according to JEDEC Standard JESD22-A114, *Electrostatic Discharge (ESD) Sensitivity Testing Human Body Model (HBM)*.
2. Determined according to JEDEC Standard JESD22-C101, *Field-Induced Charged-Device Model Test Method for Electrostatic-Discharge-Withstand Thresholds of Microelectronic Components*.
3. Determined according to JEDEC Standard JESD78D, *IC Latch-up Test*. The test produced the following results:
   - Test was performed at 125 °C case temperature (Class II).
   - I/O pins pass +100/-100 mA I-test with I_{DD} current limit at 400 mA (V_{DD} collapsed during positive injection).
   - I/O pins pass +50/-100 mA I-test with I_{DD} current limit at 1000 mA for V_{DD}.
   - Supply groups pass 1.5 V_{ccmax}.
   - RESET_B pin was only tested with negative I-test due to product conditioning requirement.

3.4 Voltage and current operating ratings

Absolute maximum ratings are stress ratings only, and functional operation at the maxima is not guaranteed. Stress beyond the limits specified in the following table may affect device reliability or cause permanent damage to the device. For functional operating conditions, refer to the remaining tables in this document.

This device contains circuitry protecting against damage due to high static voltage or electrical fields; however, it is advised that normal precautions be taken to avoid application of any voltages higher than maximum-rated voltages to this high-impedance circuit. Reliability of operation is enhanced if unused inputs are tied to an appropriate logic voltage level (for instance, either V_{SS} or V_{DD}) or the programmable pullup resistor associated with the pin is enabled.

Table 1. Voltage and current operating ratings

Symbol	Description	Min.	Max.	Unit
V_{DD}	Digital supply voltage	–0.3	6.0	V
I_{DD}	Maximum current into V_{DD}	—	120	mA
V_{IN}	Input voltage except true open drain pins	–0.3	V_{DD} + 0.3[1]	V
	Input voltage of true open drain pins	–0.3	6	V
I_D	Instantaneous maximum current single pin limit (applies to all port pins)	–25	25	mA
V_{DDA}	Analog supply voltage	V_{DD} – 0.3	V_{DD} + 0.3	V

1. Maximum rating of V_{DD} also applies to V_{IN}.

4 General

4.1 Nonswitching electrical specifications

4.1.1 DC characteristics

This section includes information about power supply requirements and I/O pin characteristics.

Table 2. DC characteristics

Symbol	Descriptions			Min	Typical[1]	Max	Unit
—	Operating voltage		—	2.7	—	5.5	V
T_{ramp}[2]	MCU supply ramp rate		85°C	—	—	85	V/ms
			105°C	—	—	70	
			125°C	—	—	60	
V_{OH}	Output high voltage	All I/O pins, except PTA2 and PTA3, standard-drive strength	5 V, I_{load} = –5 mA	V_{DD} – 0.8	—	—	V
			3 V, I_{load} = –2.5 mA	V_{DD} – 0.8	—	—	V
		High current drive pins, high-drive strength[3]	5 V, I_{load} = –20 mA	V_{DD} – 0.8	—	—	V
			3 V, I_{load} = –10 mA	V_{DD} – 0.8	—	—	V
I_{OHT}	Output high current	Max total I_{OH} for all ports	5 V	—	—	–100	mA
			3 V	—	—	–60	
V_{OL}	Output low voltage	All I/O pins, standard-drive strength	5 V, I_{load} = 5 mA	—	—	0.8	V
			3 V, I_{load} = 2.5 mA	—	—	0.8	V
		High current drive pins, high-drive strength[3]	5 V, I_{load} =20 mA	—	—	0.8	V
			3 V, I_{load} = 10 mA	—	—	0.8	V
I_{OLT}	Output low current	Max total I_{OL} for all ports	5 V	—	—	100	mA
			3 V	—	—	60	
V_{IH}	Input high voltage	All digital inputs	4.5≤V_{DD}<5.5 V	0.65 × V_{DD}	—	—	V
			2.7≤V_{DD}<4.5 V	0.70 × V_{DD}	—	—	
V_{IL}	Input low voltage	All digital inputs	4.5≤V_{DD}<5.5 V	—	—	0.35 × V_{DD}	V
			2.7≤V_{DD}<4.5 V	—	—	0.30 × V_{DD}	
V_{hys}	Input hysteresis	All digital inputs	—	0.06 × V_{DD}	—	—	mV
$\lvert I_{In} \rvert$	Input leakage current	Per pin (pins in high impedance input mode)	V_{IN} = V_{DD} or V_{SS}	—	0.1	1	μA

Table continues on the next page...

Table 2. DC characteristics (continued)

Symbol	Descriptions			Min	Typical[1]	Max	Unit
$\lvert I_{INTOT} \rvert$	Total leakage combined for all port pins	Pins in high impedance input mode	$V_{IN} = V_{DD}$ or V_{SS}	—	—	2	μA
R_{PU}	Pullup resistors	All digital inputs, when enabled (all I/O pins other than PTA2 and PTA3)	—	30.0	—	50.0	kΩ
R_{PU}[4]	Pullup resistors	PTA2 and PTA3 pins	—	30.0	—	60.0	kΩ
I_{IC}	DC injection current[5, 6, 7]	Single pin limit	$V_{IN} < V_{SS}$, $V_{IN} > V_{DD}$	-2	—	2	mA
		Total MCU limit, includes sum of all stressed pins		-5	—	25	
C_{In}	Input capacitance, all pins		—	—	—	7	pF
V_{RAM}	RAM retention voltage		—	2.0	—	—	V

1. Typical values are measured at 25 °C. Characterized, not tested.
2. Limit applies to both maximum absolute maximum ramp rate and typical operating conditions.
3. Only PTB4, PTB5, PTD0, PTD1, PTE0, PTE1, PTH0, and PTH1 support high current output.
4. The specified resistor value is the actual value internal to the device. The pullup value may appear higher when measured externally on the pin.
5. All functional non-supply pins, except for PTA2 and PTA3, are internally clamped to V_{SS} and V_{DD}. PTA2 and PTA3 are true open drain I/O pins that are internally clamped to V_{SS}.
6. Input must be current limited to the value specified. To determine the value of the required current-limiting resistor, calculate resistance values for positive and negative clamp voltages, then use the larger value.
7. Power supply must maintain regulation within operating V_{DD} range during instantaneous and operating maximum current conditions. If the positive injection current ($V_{In} > V_{DD}$) is higher than I_{DD}, the injection current may flow out of V_{DD} and could result in external power supply going out of regulation. Ensure that external V_{DD} load will shunt current higher than maximum injection current when the MCU is not consuming power, such as when no system clock is present, or clock rate is very low (which would reduce overall power consumption).

Table 3. LVD and POR specification

Symbol	Description		Min	Typ	Max	Unit
V_{POR}	POR re-arm voltage[1]		1.5	1.75	2.0	V
V_{LVDH}	Falling low-voltage detect threshold—high range (LVDV = 1)[2]		4.2	4.3	4.4	V
V_{LVW1H}	Falling low-voltage warning threshold— high range	Level 1 falling (LVWV = 00)	4.3	4.4	4.5	V
V_{LVW2H}		Level 2 falling (LVWV = 01)	4.5	4.5	4.6	V
V_{LVW3H}		Level 3 falling (LVWV = 10)	4.6	4.6	4.7	V
V_{LVW4H}		Level 4 falling (LVWV = 11)	4.7	4.7	4.8	V
V_{HYSH}	High range low-voltage detect/ warning hysteresis		—	100	—	mV

Table continues on the next page...

Table 3. LVD and POR specification (continued)

Symbol	Description		Min	Typ	Max	Unit
V_{LVDL}	Falling low-voltage detect threshold—low range (LVDV = 0)		2.56	2.61	2.66	V
V_{LVW1L}	Falling low-voltage warning threshold—low range	Level 1 falling (LVWV = 00)	2.62	2.7	2.78	V
V_{LVW2L}		Level 2 falling (LVWV = 01)	2.72	2.8	2.88	V
V_{LVW3L}		Level 3 falling (LVWV = 10)	2.82	2.9	2.98	V
V_{LVW4L}		Level 4 falling (LVWV = 11)	2.92	3.0	3.08	V
V_{HYSDL}	Low range low-voltage detect hysteresis		—	40	—	mV
V_{HYSWL}	Low range low-voltage warning hysteresis		—	80	—	mV
V_{BG}	Buffered bandgap output [3]		1.14	1.16	1.18	V

1. Maximum is highest voltage that POR is guaranteed.
2. Rising thresholds are falling threshold + hysteresis.
3. voltage Factory trimmed at V_{DD} = 5.0 V, Temp = 125 °C

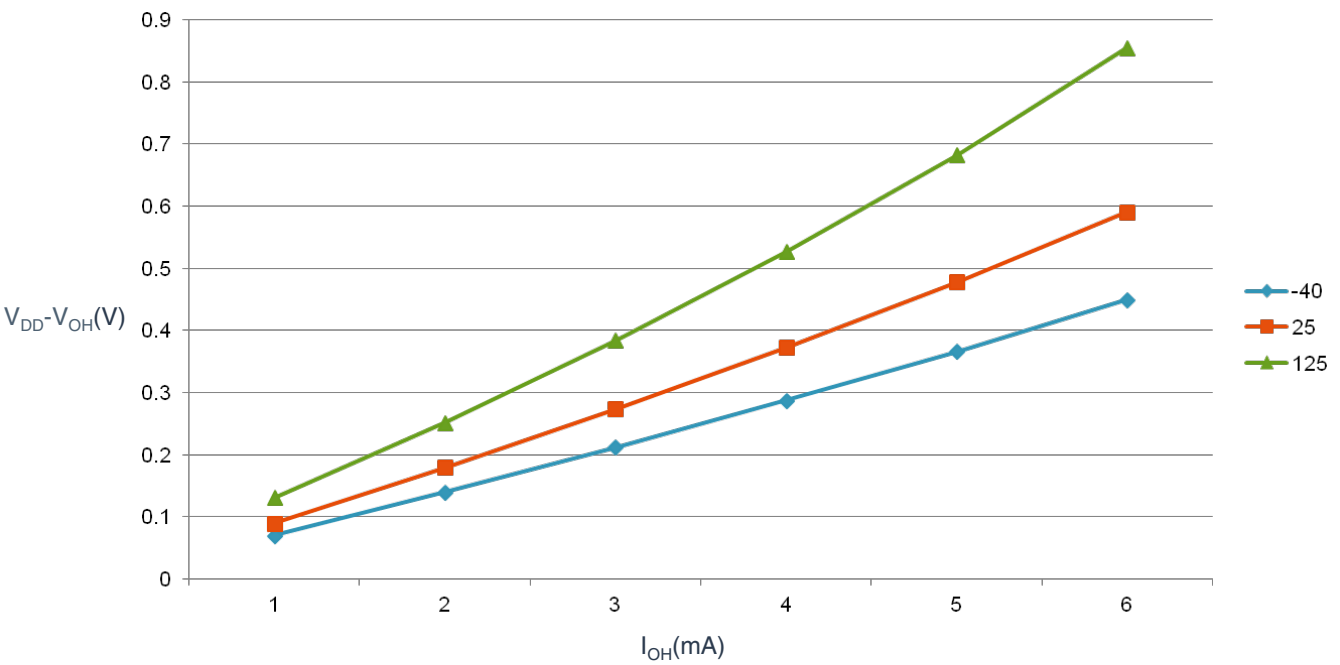

Figure 1. Typical V_{DD}-V_{OH} Vs. I_{OH} (standard drive strength) (V_{DD} = 5 V)

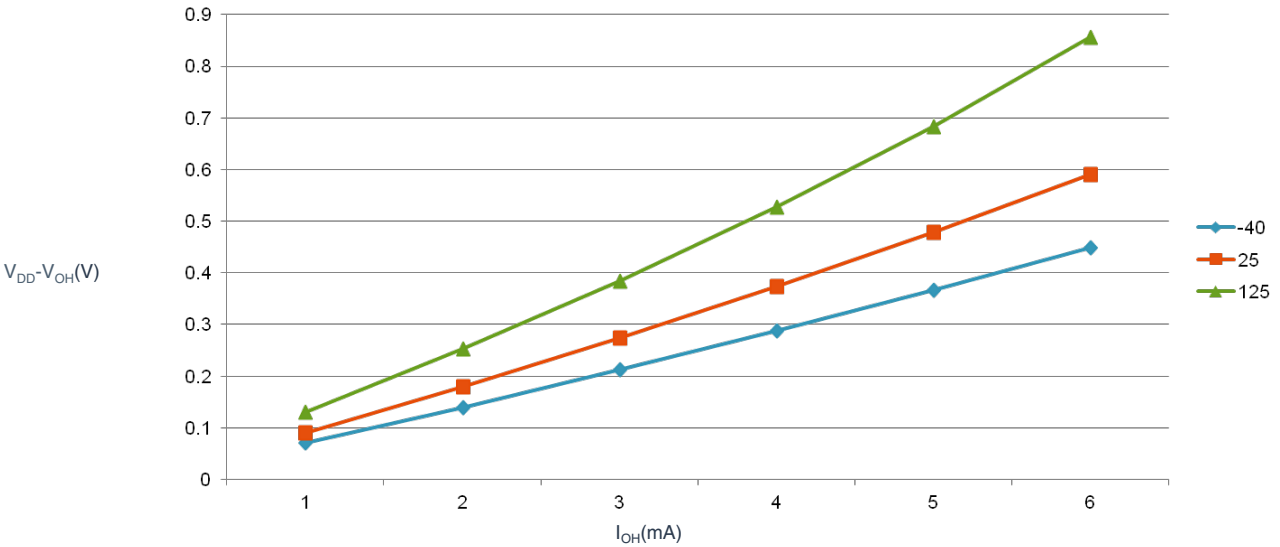

Figure 2. Typical V_{DD}-V_{OH} Vs. I_{OH} (standard drive strength) (V_{DD} = 3 V)

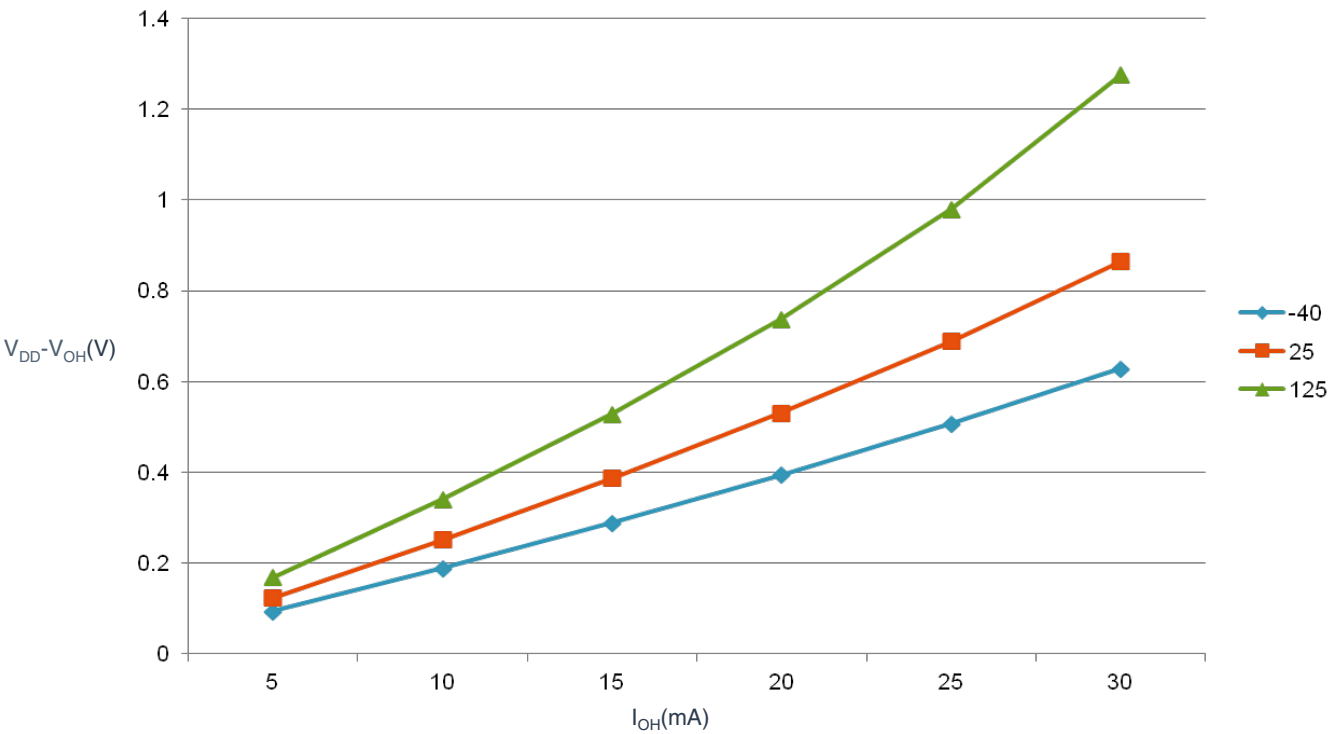

Figure 3. Typical V_{DD}-V_{OH} Vs. I_{OH} (high drive strength) (V_{DD} = 5 V)

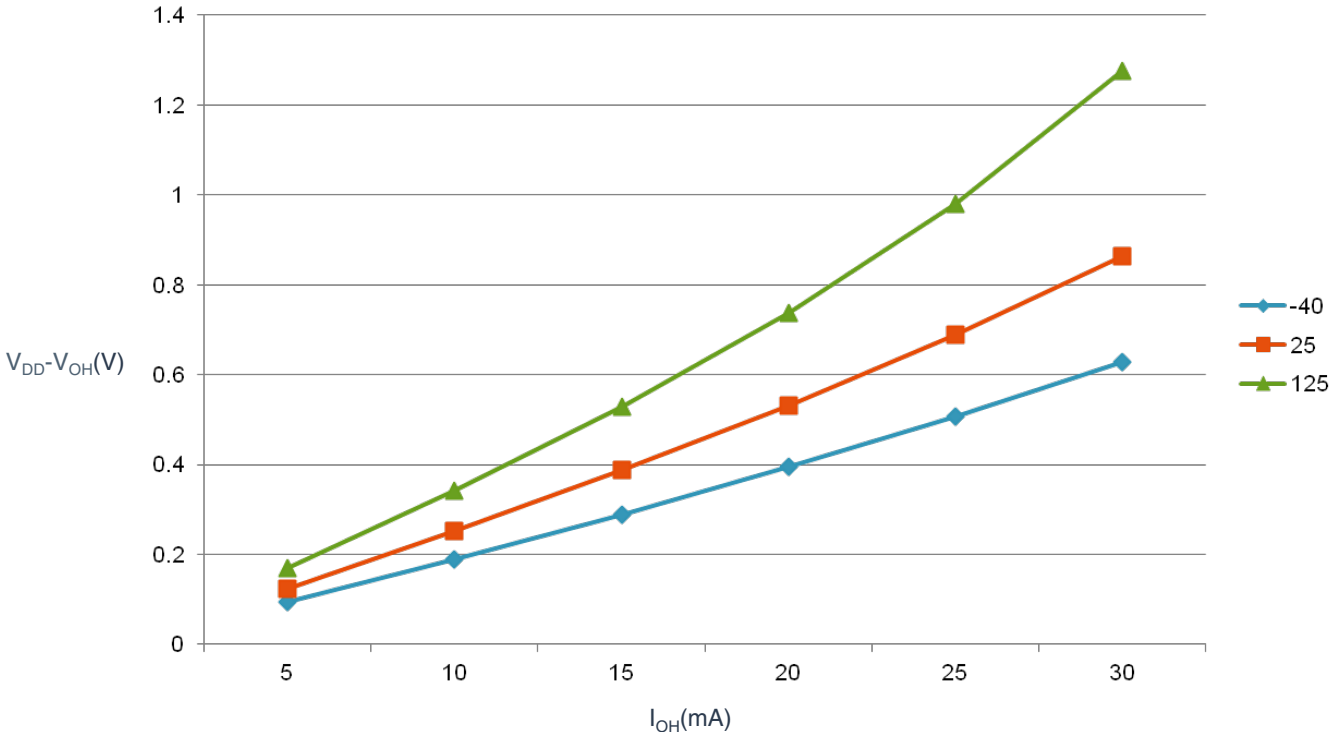

Figure 4. Typical V_{DD}-V_{OH} Vs. I_{OH} (high drive strength) (V_{DD} = 3 V)

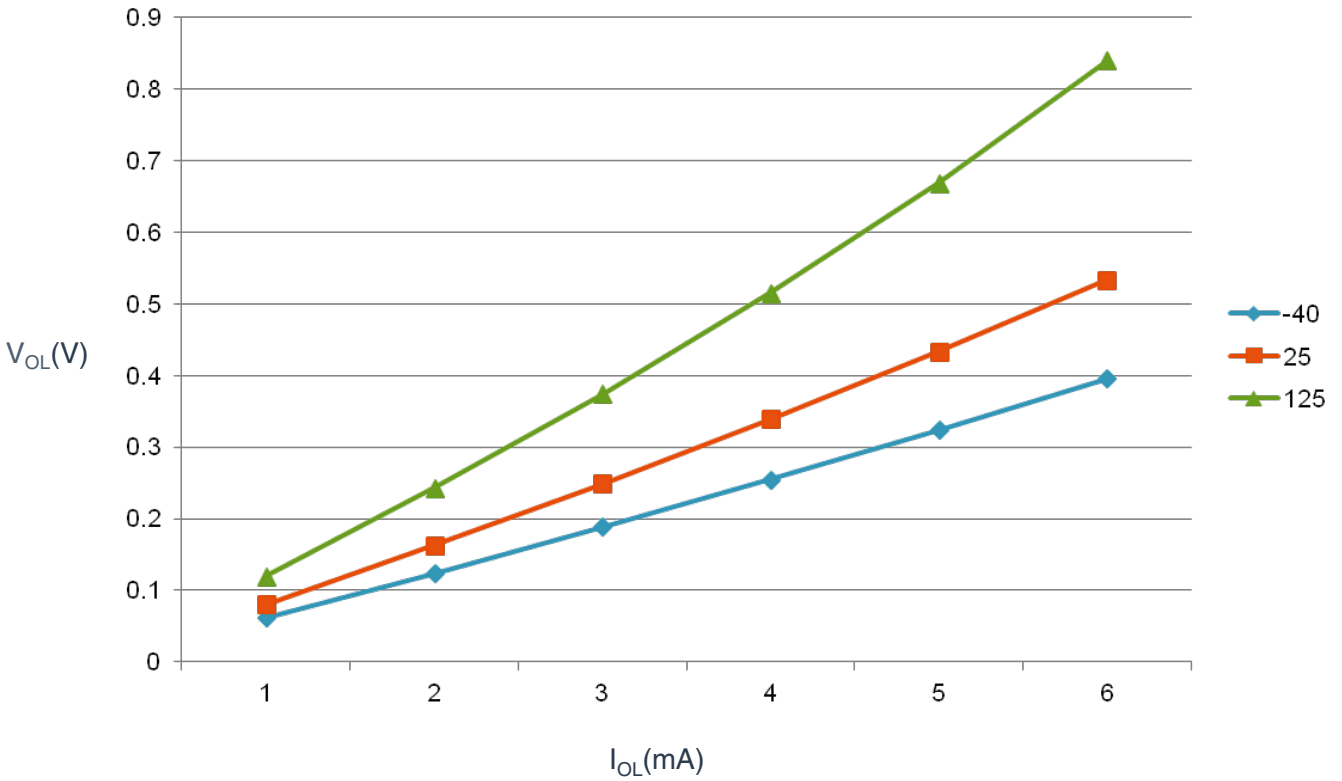

Figure 5. Typical V_{OL} Vs. I_{OL} (standard drive strength) (V_{DD} = 5 V)

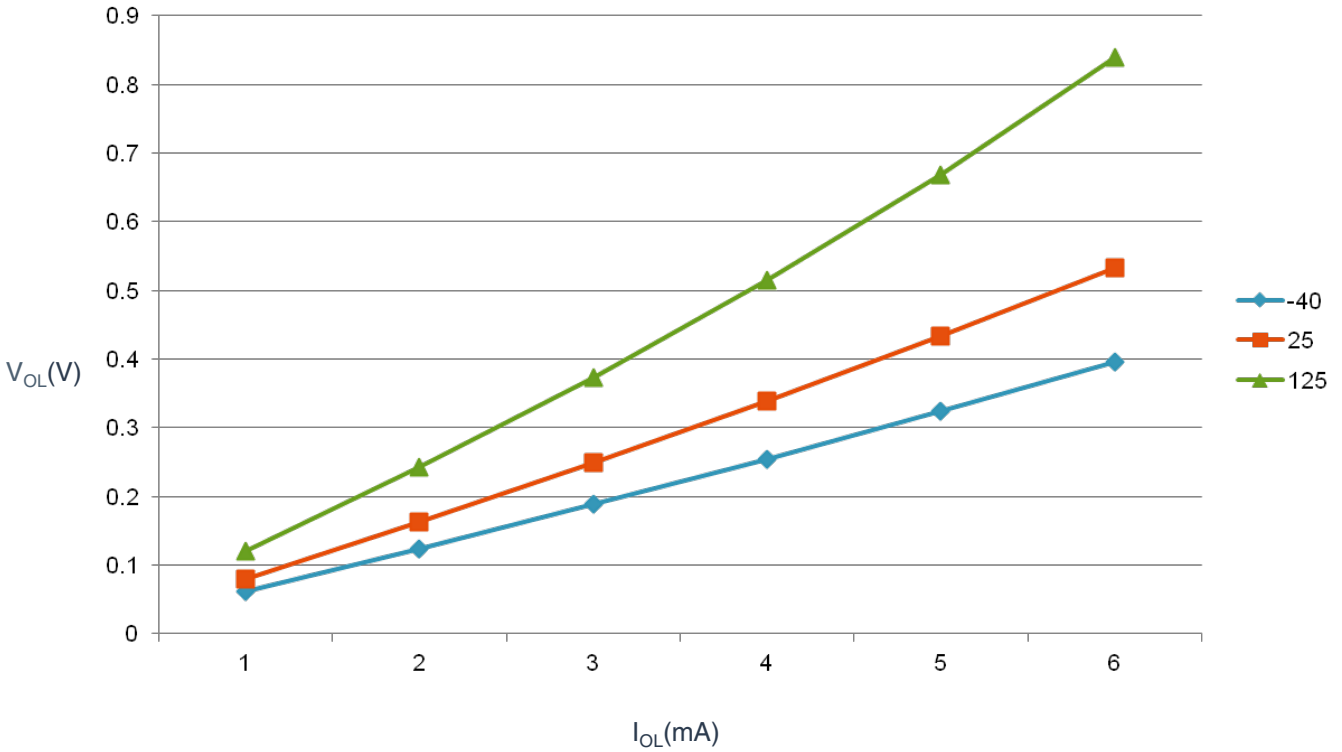

Figure 6. Typical V_{OL} Vs. I_{OL} (standard drive strength) (V_{DD} = 3 V)

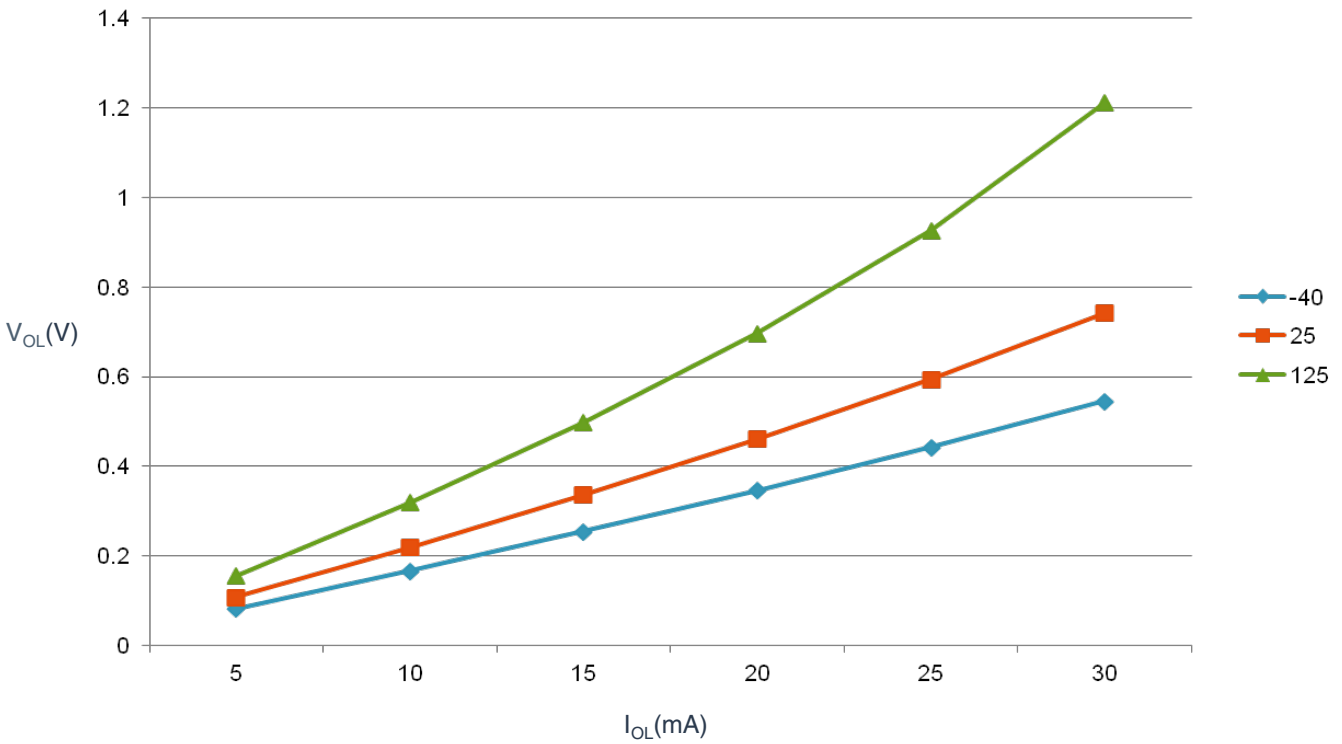

Figure 7. Typical V_{OL} Vs. I_{OL} (high drive strength) (V_{DD} = 5 V)

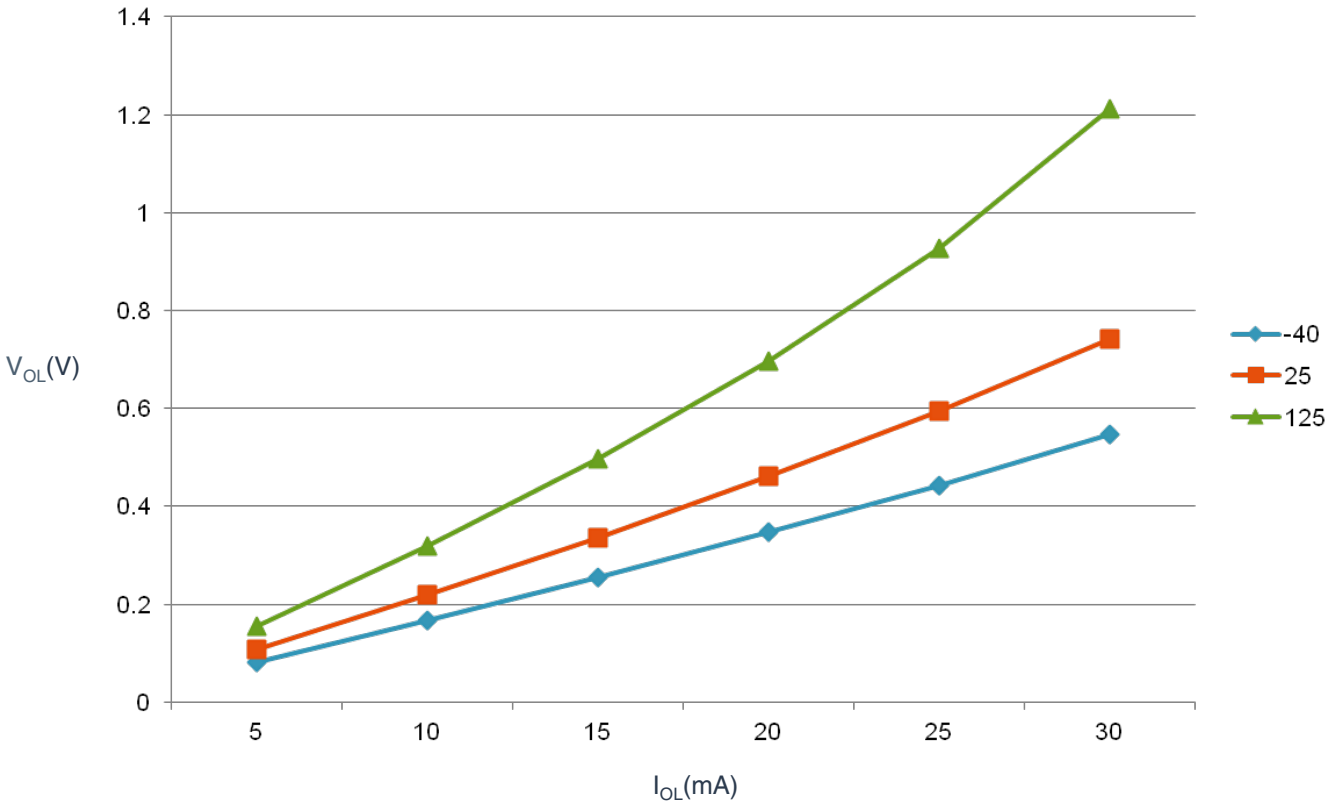

Figure 8. Typical V_{OL} Vs. I_{OL} (high drive strength) (V_{DD} = 3 V)

4.1.2 Supply current characteristics

This section includes information about power supply current in various operating modes.

Table 4. Supply current characteristics

Parameter	Symbol	Core/Bus Freq	V_{DD} (V)	Typical[1]	Max	Unit	Temp
Run supply current FEI mode, all modules clocks enabled; run from flash	RI_{DD}	48/24 MHz	5	11.1	—	mA	-40 to 125 °C
		24/24 MHz		8	—		
		12/12 MHz		5	—		
		1/1 MHz		2.4	—		
		48/24 MHz	3	11	—		
		24/24 MHz		7.9	—		
		12/12 MHz		4.9	—		
		1/1 MHz		2.3	—		
Run supply current FEI mode, all modules clocks disabled and gated; run from flash	RI_{DD}	48/24 MHz	5	7.8	—	mA	-40 to 125 °C
		24/24 MHz		5.5	—		
		12/12 MHz		3.8	—		
		1/1 MHz		2.3	—		

Table continues on the next page...

Table 4. Supply current characteristics (continued)

Parameter	Symbol	Core/Bus Freq	V_{DD} (V)	Typical[1]	Max	Unit	Temp
		48/24 MHz	3	7.7	—		
		24/24 MHz		5.4	—		
		12/12 MHz		3.7	—		
		1/1 MHz		2.2	—		
Run supply current FBE mode, all modules clocks enabled; run from RAM	RI_{DD}	48/24 MHz	5	14.7	—	mA	-40 to 125 °C
		24/24 MHz		9.8	14.9[2]		
		12/12 MHz		6	—		
		1/1 MHz		2.4	—		
		48/24 MHz	3	14.6	—		
		24/24 MHz		9.6	12.8[2]		
		12/12 MHz		5.9	—		
		1/1 MHz		2.3	—		
Run supply current FBE mode, all modules clocks disabled and gated; run from RAM	RI_{DD}	48/24 MHz	5	11.4	—	mA	-40 to 125 °C
		24/24 MHz		7.7	12.5[2]		
		12/12 MHz		4.7	—		
		1/1 MHz		2.3	—		
		48/24 MHz	3	11.3	—		
		24/24 MHz		7.6	9.5[2]		
		12/12 MHz		4.6	—		
		1/1 MHz		2.2	—		
Wait mode current FEI mode, all modules clocks enabled	WI_{DD}	48/24 MHz	5	8.4	—	mA	-40 to 125 °C
		24/24 MHz		6.5	7.2[2]		
		12/12 MHz		4.3	—		
		1/1 MHz		2.4	—		
		48/24 MHz	3	8.3	—		
		24/24 MHz		6.4	7.1[2]		
		12/12 MHz		4.2	—		
		1/1 MHz		2.3	—		
Stop mode supply current no clocks active (except 1 kHz LPO clock)[3]	SI_{DD}	—	5	2	170[2]	μA	-40 to 125 °C
		—	3	1.9	160[2]		-40 to 125 °C
ADC adder to Stop ADLPC = 1 ADLSMP = 1 ADCO = 1 MODE = 10B ADICLK = 11B	—	—	5	86	—	μA	-40 to 125 °C
			3	82	—		
ACMP adder to Stop	—	—	5	12	—	μA	-40 to 125 °C
			3	12	—		

Table continues on the next page...

Table 4. Supply current characteristics (continued)

Parameter	Symbol	Core/Bus Freq	V_{DD} (V)	Typical[1]	Max	Unit	Temp
LVD adder to Stop[4]	—	—	5	130	—	μA	-40 to 125 °C
			3	125	—		

1. Data in Typical column was characterized at 5.0 V, 25 °C or is typical recommended value.
2. The high current is observed at high temperature.
3. RTC adder cause <1 μA I_{DD} increase typically, RTC clock source is 1 kHz LPO clock.
4. LVD is periodically woken up from Stop by 5% duty cycle. The period is equal to or less than 2 ms.

4.1.3 EMC performance

Electromagnetic compatibility (EMC) performance is highly dependent on the environment in which the MCU resides. Board design and layout, circuit topology choices, location and characteristics of external components as well as MCU software operation play a significant role in EMC performance. The system designer must consult the following NXP applications notes, available on **nxp.com** for advice and guidance specifically targeted at optimizing EMC performance.

- AN2321: Designing for Board Level Electromagnetic Compatibility
- AN1050: Designing for Electromagnetic Compatibility (EMC) with HCMOS Microcontrollers
- AN1263: Designing for Electromagnetic Compatibility with Single-Chip Microcontrollers
- AN2764: Improving the Transient Immunity Performance of Microcontroller-Based Applications
- AN1259: System Design and Layout Techniques for Noise Reduction in MCU-Based Systems

4.2 Switching specifications

4.2.1 Control timing

Table 5. Control timing

Num	Rating	Symbol	Min	Typical[1]	Max	Unit
1	System and core clock	f_{Sys}	DC	—	48	MHz
2	Bus frequency (t_{cyc} = 1/f_{Bus})	f_{Bus}	DC	—	24	MHz
3	Internal low power oscillator frequency	f_{LPO}	0.67	1.0	1.25	KHz
4	External reset pulse width[2]	t_{extrst}	1.5 × t_{cyc}	—	—	ns

Table continues on the next page...

Table 5. Control timing (continued)

Num	Rating		Symbol	Min	Typical[1]	Max	Unit
5	Reset low drive		t_{rstdrv}	34 × t_{cyc}	—	—	ns
6	IRQ pulse width	Asynchronous path[2]	t_{ILIH}	100	—	—	ns
		Synchronous path[3]	t_{IHIL}	1.5 × t_{cyc}	—	—	ns
7	Keyboard interrupt pulse width	Asynchronous path[2]	t_{ILIH}	100	—	—	ns
		Synchronous path	t_{IHIL}	1.5 × t_{cyc}	—	—	ns
8	Port rise and fall time - Normal drive strength (load = 50 pF)[4]	—	t_{Rise}	—	10.2	—	ns
			t_{Fall}	—	9.5	—	ns
	Port rise and fall time - high drive strength (load = 50 pF)[4]	—	t_{Rise}	—	5.4	—	ns
			t_{Fall}	—	4.6	—	ns

1. Typical values are based on characterization data at V_{DD} = 5.0 V, 25 °C unless otherwise stated.
2. This is the shortest pulse that is guaranteed to be recognized as a $\overline{\text{RESET}}$ pin request.
3. This is the minimum pulse width that is guaranteed to pass through the pin synchronization circuitry. Shorter pulses may or may not be recognized. In stop mode, the synchronizer is bypassed so shorter pulses can be recognized.
4. Timing is shown with respect to 20% V_{DD} and 80% V_{DD} levels. Temperature range -40 °C to 125 °C.

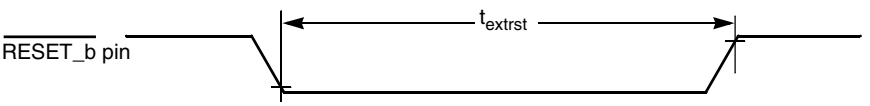

Figure 9. Reset timing

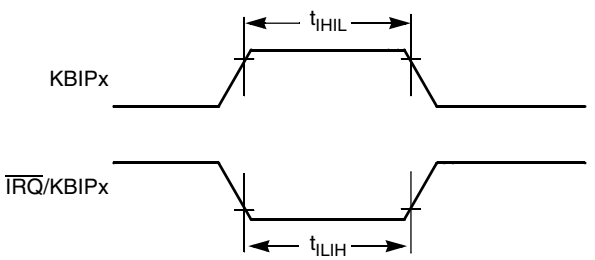

Figure 10. KBIPx timing

4.2.2 FTM module timing

Synchronizer circuits determine the shortest input pulses that can be recognized or the fastest clock that can be used as the optional external source to the timer counter. These synchronizers operate from the current bus rate clock.

Table 6. FTM input timing

Function	Symbol	Min	Max	Unit
Timer clock frequency	f_{Timer}	f_{Bus}	f_{Sys}	Hz
External clock frequency	f_{TCLK}	0	$f_{Timer}/4$	Hz

Table continues on the next page...

Table 6. FTM input timing (continued)

Function	Symbol	Min	Max	Unit
External clock period	t_{TCLK}	4	—	t_{cyc}
External clock high time	t_{clkh}	1.5	—	t_{cyc}
External clock low time	t_{clkl}	1.5	—	t_{cyc}
Input capture pulse width	t_{ICPW}	1.5	—	t_{cyc}

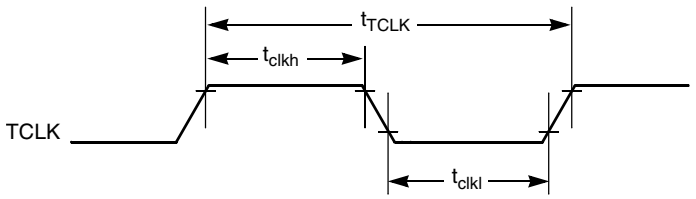

Figure 11. Timer external clock

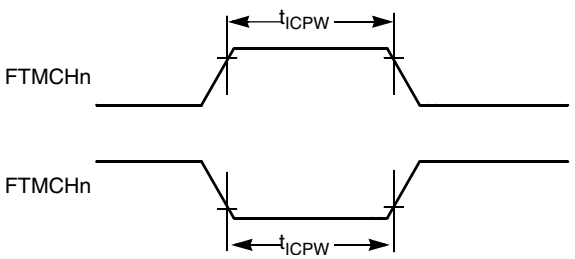

Figure 12. Timer input capture pulse

4.3 Thermal specifications

4.3.1 Thermal characteristics

This section provides information about operating temperature range, power dissipation, and package thermal resistance. Power dissipation on I/O pins is usually small compared to the power dissipation in on-chip logic and voltage regulator circuits, and it is user-determined rather than being controlled by the MCU design. To take $P_{I/O}$ into account in power calculations, determine the difference between actual pin voltage and V_{SS} or V_{DD} and multiply by the pin current for each I/O pin. Except in cases of unusually high pin current (heavy loads), the difference between pin voltage and V_{SS} or V_{DD} will be very small.

Table 7. Thermal attributes

Board type	Symbol	Description	64 LQFP	80 LQFP	Unit	Notes
Single-layer (1S)	$R_{\theta JA}$	Thermal resistance, junction to ambient (natural convection)	71	57	°C/W	1, 2
Four-layer (2s2p)	$R_{\theta JA}$	Thermal resistance, junction to ambient (natural convection)	53	44	°C/W	1, 3
Single-layer (1S)	$R_{\theta JMA}$	Thermal resistance, junction to ambient (200 ft./min. air speed)	59	47	°C/W	1, 3
Four-layer (2s2p)	$R_{\theta JMA}$	Thermal resistance, junction to ambient (200 ft./min. air speed)	46	38	°C/W	1, 3
—	$R_{\theta JB}$	Thermal resistance, junction to board	35	28	°C/W	4
—	$R_{\theta JC}$	Thermal resistance, junction to case	20	15	°C/W	5
—	Ψ_{JT}	Thermal characterization parameter, junction to package top outside center (natural convection)	5	3	°C/W	6

1. Junction temperature is a function of die size, on-chip power dissipation, package thermal resistance, mounting site (board) temperature, ambient temperature, air flow, power dissipation of other components on the board, and board thermal resistance.
2. Per JEDEC JESD51-2 with the single layer board (JESD51-3) horizontal.
3. Per JEDEC JESD51-6 with the board (JESD51-7) horizontal.
4. Thermal resistance between the die and the printed circuit board per JEDEC JESD51-8. Board temperature is measured on the top surface of the board near the package.
5. Thermal resistance between the die and the solder pad on the bottom of the package. Interface resistance is ignored.
6. Thermal characterization parameter indicating the temperature difference between package top and the junction temperature per JEDEC JESD51-2. When Greek letters are not available, the thermal characterization.

The average chip-junction temperature (T_J) in °C can be obtained from:

$$T_J = T_A + (P_D \times \theta_{JA})$$

Where:

T_A = Ambient temperature, °C

θ_{JA} = Package thermal resistance, junction-to-ambient, °C/W

$P_D = P_{int} + P_{I/O}$

$P_{int} = I_{DD} \times V_{DD}$, Watts - chip internal power

$P_{I/O}$ = Power dissipation on input and output pins - user determined

For most applications, $P_{I/O} << P_{int}$ and can be neglected. An approximate relationship between P_D and T_J (if $P_{I/O}$ is neglected) is:

$$P_D = K \div (T_J + 273\ °C)$$

Solving the equations above for K gives:

$$K = P_D \times (T_A + 273\ °C) + \theta_{JA} \times (P_D)^2$$

where K is a constant pertaining to the particular part. K can be determined by measuring P_D (at equilibrium) for an known T_A. Using this value of K, the values of P_D and T_J can be obtained by solving the above equations iteratively for any value of T_A.

5 Peripheral operating requirements and behaviors

5.1 Core modules

5.1.1 SWD electricals

Table 8. SWD full voltage range electricals

Symbol	Description	Min.	Max.	Unit
	Operating voltage	2.7	5.5	V
J1	SWD_CLK frequency of operation • Serial wire debug	0	24	MHz
J2	SWD_CLK cycle period	1/J1	—	ns
J3	SWD_CLK clock pulse width • Serial wire debug	20	—	ns
J4	SWD_CLK rise and fall times	—	3	ns
J9	SWD_DIO input data setup time to SWD_CLK rise	10	—	ns
J10	SWD_DIO input data hold time after SWD_CLK rise	3	—	ns
J11	SWD_CLK high to SWD_DIO data valid	—	35	ns
J12	SWD_CLK high to SWD_DIO high-Z	5	—	ns

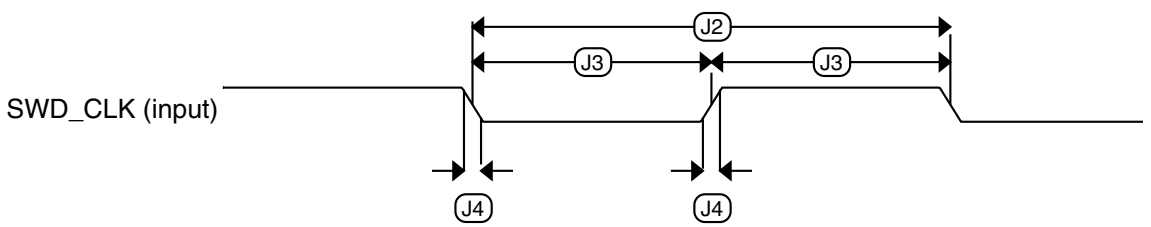

Figure 13. Serial wire clock input timing

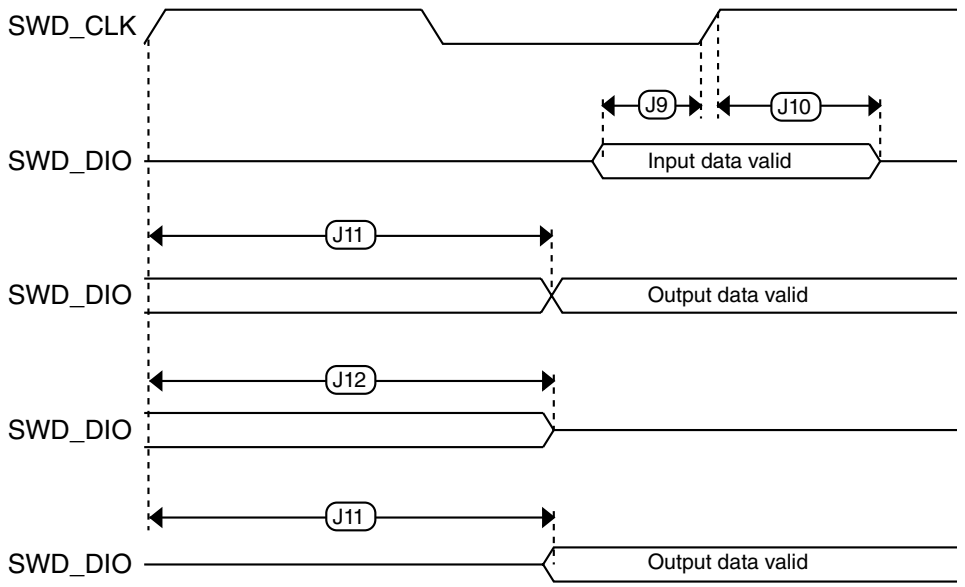

Figure 14. Serial wire data timing

5.2 External oscillator (OSC) and ICS characteristics

Table 9. OSC and ICS specifications (temperature range = -40 to 125 °C ambient)

Num	Characteristic		Symbol	Min	Typical[1]	Max	Unit
1	Crystal or resonator frequency	Low range (RANGE = 0)	f_{lo}	31.25	32.768	39.0625	kHz
		High range (RANGE = 1)	f_{hi}	4	—	24	MHz
2	Load capacitors		C1, C2	See Note[2]			
3	Feedback resistor	Low Frequency, Low-Power Mode[3]	R_F	—	—	—	MΩ
		Low Frequency, High-Gain Mode		—	10	—	MΩ
		High Frequency, Low-Power Mode		—	1	—	MΩ
		High Frequency, High-Gain Mode		—	1	—	MΩ
4	Series resistor - Low Frequency	Low-Power Mode [3]	R_S	—	0	—	kΩ
		High-Gain Mode		—	200	—	kΩ
5	Series resistor - High Frequency	Low-Power Mode[3]	R_S	—	0	—	kΩ
	Series resistor - High Frequency, High-Gain Mode	4 MHz		—	0	—	kΩ
		8 MHz		—	0	—	kΩ

Table continues on the next page...

Table 9. OSC and ICS specifications (temperature range = -40 to 125 °C ambient) (continued)

Num	Characteristic		Symbol	Min	Typical[1]	Max	Unit
		16 MHz		—	0	—	kΩ
6	Crystal start-up time low range = 32.768 kHz crystal; High range = 20 MHz crystal[4,5]	Low range, low power	t_{CSTL}	—	1000	—	ms
		Low range, high gain		—	800	—	ms
		High range, low power	t_{CSTH}	—	3	—	ms
		High range, high gain		—	1.5	—	ms
7	Internal reference start-up time		t_{IRST}	—	20	50	μs
8	Internal reference clock (IRC) frequency trim range		f_{int_t}	31.25	—	39.0625	kHz
9	Internal reference clock frequency, factory trimmed,	T = 125 °C, V_{DD} = 5 V	f_{int_ft}	—	37.5	—	kHz
10	DCO output frequency range	FLL reference = fint_t, flo, or fhi/RDIV	f_{dco}	40	—	50	MHz
11	Factory trimmed internal oscillator accuracy	T = 125 °C, V_{DD} = 5 V	Δf_{int_ft}	-0.8	—	0.8	%
12	Deviation of IRC over temperature when trimmed at T = 25 °C, V_{DD} = 5 V	Over temperature range from -40 °C to 125°C	Δf_{int_t}	-1	—	0.8	%
13	Frequency accuracy of DCO output using factory trim value	Over temperature range from -40 °C to 125°C	Δf_{dco_ft}	-2.3	—	0.8	%
14	FLL acquisition time[4,6]		$t_{Acquire}$	—	—	2	ms
15	Long term jitter of DCO output clock (averaged over 2 ms interval)[7]		C_{Jitter}	—	0.02	0.2	$\%f_{dco}$

1. Data in Typical column was characterized at 5.0 V, 25 °C or is typical recommended value.
2. See crystal or resonator manufacturer's recommendation.
3. Load capacitors (C_1,C_2), feedback resistor (R_F) and series resistor (R_S) are incorporated internally when RANGE = HGO = 0.
4. This parameter is characterized and not tested on each device.
5. Proper PC board layout procedures must be followed to achieve specifications.
6. This specification applies to any time the FLL reference source or reference divider is changed, trim value changed, or changing from FLL disabled (FBELP, FBILP) to FLL enabled (FEI, FEE, FBE, FBI). If a crystal/resonator is being used as the reference, this specification assumes it is already running.
7. Jitter is the average deviation from the programmed frequency measured over the specified interval at maximum f_{Bus}. Measurements are made with the device powered by filtered supplies and clocked by a stable external clock signal. Noise injected into the FLL circuitry via V_{DD} and V_{SS} and variation in crystal oscillator frequency increase the C_{Jitter} percentage for a given interval.

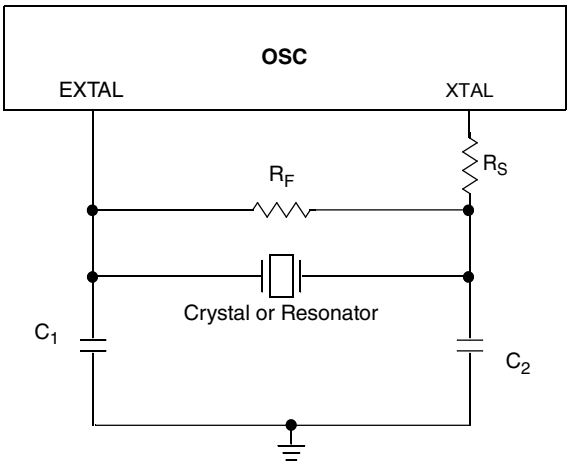

Figure 15. Typical crystal or resonator circuit

5.3 NVM specifications

This section provides details about program/erase times and program/erase endurance for the flash memories.

Table 10. Flash characteristics

Characteristic	Symbol	Min[1]	Typical[2]	Max[3]	Unit[4]
Supply voltage for program/erase –40 °C to 125 °C	$V_{prog/erase}$	2.7	—	5.5	V
Supply voltage for read operation	V_{Read}	2.7	—	5.5	V
NVM Bus frequency	f_{NVMBUS}	1	—	24	MHz
NVM Operating frequency	f_{NVMOP}	0.8	1	1.05	MHz
Erase Verify All Blocks	t_{VFYALL}	—	—	2605	t_{cyc}
Erase Verify Flash Block	t_{RD1BLK}	—	—	2579	t_{cyc}
Erase Verify Flash Section	t_{RD1SEC}	—	—	485	t_{cyc}
Read Once	t_{RDONCE}	—	—	464	t_{cyc}
Program Flash (2 word)	t_{PGM2}	0.12	0.13	0.31	ms
Program Flash (4 word)	t_{PGM4}	0.21	0.21	0.49	ms
Program Once	$t_{PGMONCE}$	0.20	0.21	0.21	ms
Erase All Blocks	t_{ERSALL}	95.42	100.18	100.30	ms
Erase Flash Block	t_{ERSBLK}	95.42	100.18	100.30	ms
Erase Flash Sector	t_{ERSPG}	19.10	20.05	20.09	ms
Unsecure Flash	t_{UNSECU}	95.42	100.19	100.31	ms
Verify Backdoor Access Key	t_{VFYKEY}	—	—	482	t_{cyc}
Set User Margin Level	t_{MLOADU}	—	—	415	t_{cyc}
FLASH Program/erase endurance T_L to T_H = -40 °C to 125 °C	n_{FLPE}	10 k	100 k	—	Cycles

Table continues on the next page...

Table 10. Flash characteristics (continued)

Characteristic	Symbol	Min[1]	Typical[2]	Max[3]	Unit[4]
Data retention at an average junction temperature of T_{Javg} = 85°C after up to 10,000 program/erase cycles	t_{D_ret}	15	100	—	years

1. Minimum times are based on maximum f_{NVMOP} and maximum f_{NVMBUS}
2. Typical times are based on typical f_{NVMOP} and maximum f_{NVMBUS}
3. Maximum times are based on typical f_{NVMOP} and typical f_{NVMBUS} plus aging
4. $t_{cyc} = 1 / f_{NVMBUS}$

Program and erase operations do not require any special power sources other than the normal V_{DD} supply. For more detailed information about program/erase operations, see the Flash Memory Module section in the reference manual.

5.4 Analog

5.4.1 ADC characteristics

Table 11. 5 V 12-bit ADC operating conditions

Characteristic	Conditions	Symbol	Min	Typ[1]	Max	Unit	Comment
Reference potential	• Low • High	V_{REFL} V_{REFH}	V_{SSA} $V_{DDA}/2$	— —	$V_{DDA}/2$ V_{DDA}	V	—
Supply voltage	Absolute	V_{DDA}	2.7	—	5.5	V	—
	Delta to V_{DD} (V_{DD}-V_{DDA})	ΔV_{DDA}	-100	0	+100	mV	—
Input voltage		V_{ADIN}	V_{REFL}	—	V_{REFH}	V	—
Input capacitance		C_{ADIN}	—	4.5	5.5	pF	—
Input resistance		R_{ADIN}	—	3	5	kΩ	—
Analog source resistance	12-bit mode • f_{ADCK} > 4 MHz • f_{ADCK} < 4 MHz	R_{AS}	— —	— —	2 5	kΩ	External to MCU
	10-bit mode • f_{ADCK} > 4 MHz • f_{ADCK} < 4 MHz		— —	— —	5 10		
	8-bit mode (all valid f_{ADCK})		—	—	10		
ADC conversion clock frequency	High speed (ADLPC=0)	f_{ADCK}	0.4	—	8.0	MHz	—
	Low power (ADLPC=1)		0.4	—	4.0		

1. Typical values assume V_{DDA} = 5.0 V, Temp = 25°C, f_{ADCK}=1.0 MHz unless otherwise stated. Typical values are for reference only and are not tested in production.

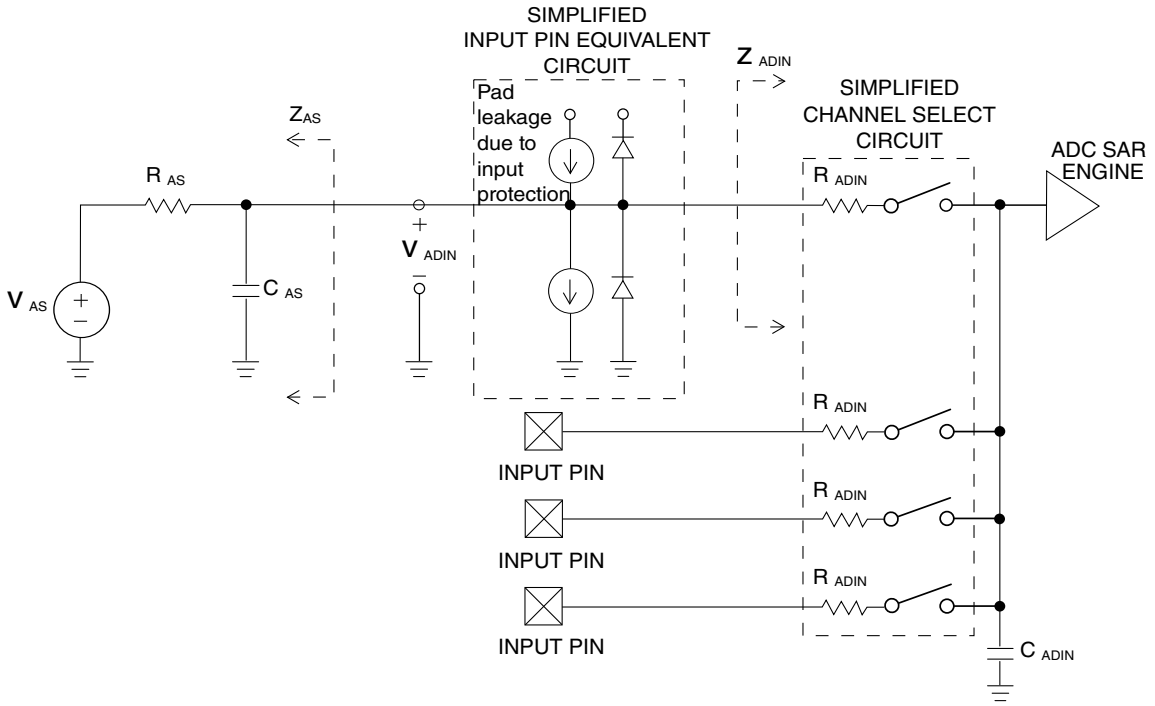

Figure 16. ADC input impedance equivalency diagram

Table 12. 12-bit ADC characteristics ($V_{REFH} = V_{DDA}$, $V_{REFL} = V_{SSA}$)

Characteristic	Conditions	Symbol	Min	Typ[1]	Max	Unit
Supply current ADLPC = 1 ADLSMP = 1 ADCO = 1		I_{DDA}	—	133	—	μA
Supply current ADLPC = 1 ADLSMP = 0 ADCO = 1		I_{DDA}	—	218	—	μA
Supply current ADLPC = 0 ADLSMP = 1 ADCO = 1		I_{DDA}	—	327	—	μA
Supply current ADLPC = 0 ADLSMP = 0 ADCO = 1		I_{DDA}	—	582	990	μA
Supply current	Stop, reset, module off	I_{DDA}	—	0.011	1	μA

Table continues on the next page...

Table 12. 12-bit ADC characteristics ($V_{REFH} = V_{DDA}$, $V_{REFL} = V_{SSA}$) (continued)

Characteristic	Conditions	Symbol	Min	Typ[1]	Max	Unit
ADC asynchronous clock source	High speed (ADLPC = 0)	f_{ADACK}	2	3.3	5	MHz
	Low power (ADLPC = 1)		1.25	2	3.3	
Conversion time (including sample time)	Short sample (ADLSMP = 0)	t_{ADC}	—	20	—	ADCK cycles
	Long sample (ADLSMP = 1)		—	40	—	
Sample time	Short sample (ADLSMP = 0)	t_{ADS}	—	3.5	—	ADCK cycles
	Long sample (ADLSMP = 1)		—	23.5	—	
Total unadjusted Error[2]	12-bit mode	E_{TUE}	—	±5.0	—	LSB[3]
	10-bit mode		—	±1.5	—	
	8-bit mode		—	±0.8	—	
Differential Non-Liniarity	12-bit mode	DNL	—	±1.5	—	LSB[3]
	10-bit mode		—	±0.4	—	
	8-bit mode		—	±0.15	—	
Integral Non-Linearity	12-bit mode	INL	—	±1.5	—	LSB[3]
	10-bit mode		—	±0.4	—	
	8-bit mode		—	±0.15	—	
Zero-scale error[4]	12-bit mode	E_{ZS}	—	±1.0	—	LSB[3]
	10-bit mode		—	±0.2	—	
	8-bit mode		—	±0.35	—	
Full-scale error[5]	12-bit mode	E_{FS}	—	±2.5	—	LSB[3]
	10-bit mode		—	±0.3	—	
	8-bit mode		—	±0.25	—	
Quantization error	≤12 bit modes	E_Q	—	—	±0.5	LSB[3]
Input leakage error[6]	all modes	E_{IL}	$I_{In} \times R_{AS}$			mV
Temp sensor slope	-40 °C–25 °C	m	—	3.266	—	mV/°C
	25 °C–125 °C		—	3.638	—	
Temp sensor voltage	25 °C	V_{TEMP25}	—	1.396	—	V

1. Typical values assume V_{DDA} = 5.0 V, Temp = 25 °C, f_{ADCK}=1.0 MHz unless otherwise stated. Typical values are for reference only and are not tested in production.
2. Includes quantization
3. 1 LSB = $(V_{REFH} - V_{REFL})/2^N$
4. $V_{ADIN} = V_{SSA}$
5. $V_{ADIN} = V_{DDA}$
6. I_{In} = leakage current (refer to DC characteristics)

5.4.2 Analog comparator (ACMP) electricals

Table 13. Comparator electrical specifications

Characteristic	Symbol	Min	Typical	Max	Unit
Supply voltage	V_{DDA}	2.7	—	5.5	V
Supply current (Operation mode)	I_{DDA}	—	10	20	μA
Analog input voltage	V_{AIN}	V_{SS} - 0.3	—	V_{DDA}	V
Analog input offset voltage	V_{AIO}	—	—	40	mV
Analog comparator hysteresis (HYST=0)	V_H	—	15	20	mV
Analog comparator hysteresis (HYST=1)	V_H	—	20	30	mV
Supply current (Off mode)	I_{DDAOFF}	—	60	—	nA
Propagation Delay	t_D	—	0.4	1	μs

5.5 Communication interfaces

5.5.1 SPI switching specifications

The serial peripheral interface (SPI) provides a synchronous serial bus with master and slave operations. Many of the transfer attributes are programmable. The following tables provide timing characteristics for classic SPI timing modes. See the SPI chapter of the chip's reference manual for information about the modified transfer formats used for communicating with slower peripheral devices. All timing is shown with respect to 20% V_{DD} and 80% V_{DD}, unless noted, and 25 pF load on all SPI pins. All timing assumes slew rate control is disabled and high-drive strength is enabled for SPI output pins.

Table 14. SPI master mode timing

Num.	Symbol	Description	Min.	Max.	Unit	Comment
1	f_{op}	Frequency of operation	$f_{Bus}/2048$	$f_{Bus}/2$	Hz	f_{Bus} is the bus clock
2	t_{SPSCK}	SPSCK period	2 x t_{Bus}	2048 x t_{Bus}	ns	$t_{Bus} = 1/f_{Bus}$
3	t_{Lead}	Enable lead time	1/2	—	t_{SPSCK}	—
4	t_{Lag}	Enable lag time	1/2	—	t_{SPSCK}	—
5	t_{WSPSCK}	Clock (SPSCK) high or low time	t_{Bus} – 30	1024 x t_{Bus}	ns	—
6	t_{SU}	Data setup time (inputs)	8	—	ns	—
7	t_{HI}	Data hold time (inputs)	8	—	ns	—
8	t_v	Data valid (after SPSCK edge)	—	25	ns	—
9	t_{HO}	Data hold time (outputs)	20	—	ns	—

Table continues on the next page...

Table 14. SPI master mode timing (continued)

Num.	Symbol	Description	Min.	Max.	Unit	Comment
10	t_{RI}	Rise time input	—	t_{Bus} – 25	ns	—
	t_{FI}	Fall time input				
11	t_{RO}	Rise time output	—	25	ns	—
	t_{FO}	Fall time output				

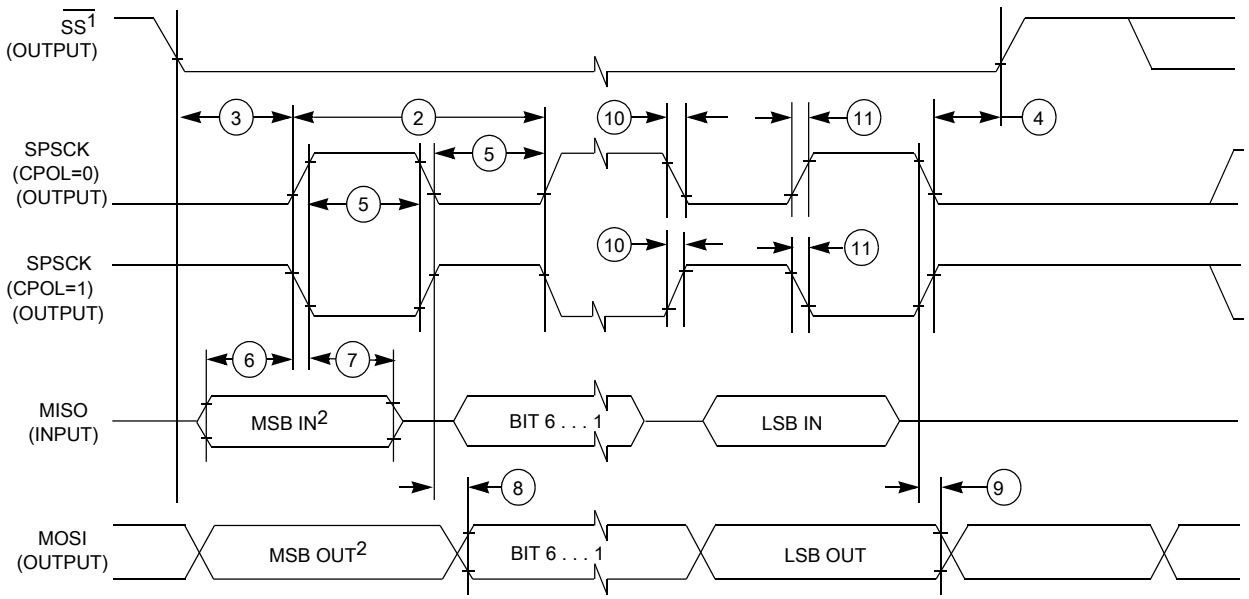

1. If configured as an output.
2. LSBF = 0. For LSBF = 1, bit order is LSB, bit 1, ..., bit 6, MSB.

Figure 17. SPI master mode timing (CPHA=0)

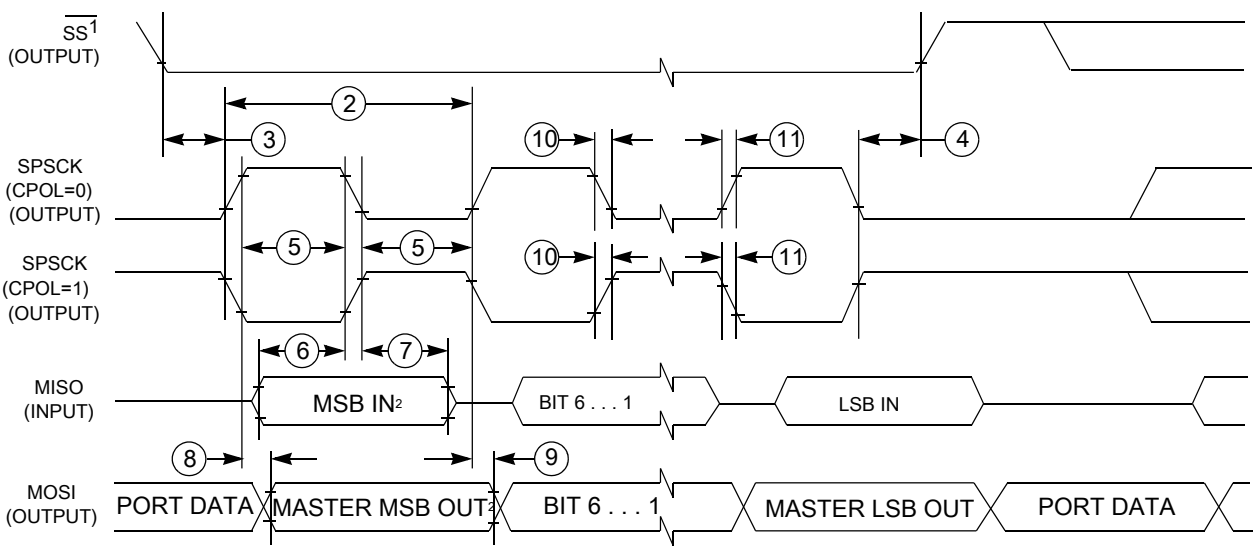

1.If configured as output
2. LSBF = 0. For LSBF = 1, bit order is LSB, bit 1, ..., bit 6, MSB.

Figure 18. SPI master mode timing (CPHA=1)

Table 15. SPI slave mode timing

Num.	Symbol	Description	Min.	Max.	Unit	Comment
1	f_{op}	Frequency of operation	0	$f_{Bus}/4$	Hz	f_{Bus} is the bus clock as defined in Control timing.
2	t_{SPSCK}	SPSCK period	4 x t_{Bus}	—	ns	$t_{Bus} = 1/f_{Bus}$
3	t_{Lead}	Enable lead time	1	—	t_{Bus}	—
4	t_{Lag}	Enable lag time	1	—	t_{Bus}	—
5	t_{WSPSCK}	Clock (SPSCK) high or low time	t_{Bus} - 30	—	ns	—
6	t_{SU}	Data setup time (inputs)	15	—	ns	—
7	t_{HI}	Data hold time (inputs)	25	—	ns	—
8	t_a	Slave access time	—	t_{Bus}	ns	Time to data active from high-impedance state
9	t_{dis}	Slave MISO disable time	—	t_{Bus}	ns	Hold time to high-impedance state
10	t_v	Data valid (after SPSCK edge)	—	25	ns	—
11	t_{HO}	Data hold time (outputs)	0	—	ns	—
12	t_{RI}	Rise time input	—	t_{Bus} - 25	ns	—
	t_{FI}	Fall time input				
13	t_{RO}	Rise time output	—	25	ns	—
	t_{FO}	Fall time output				

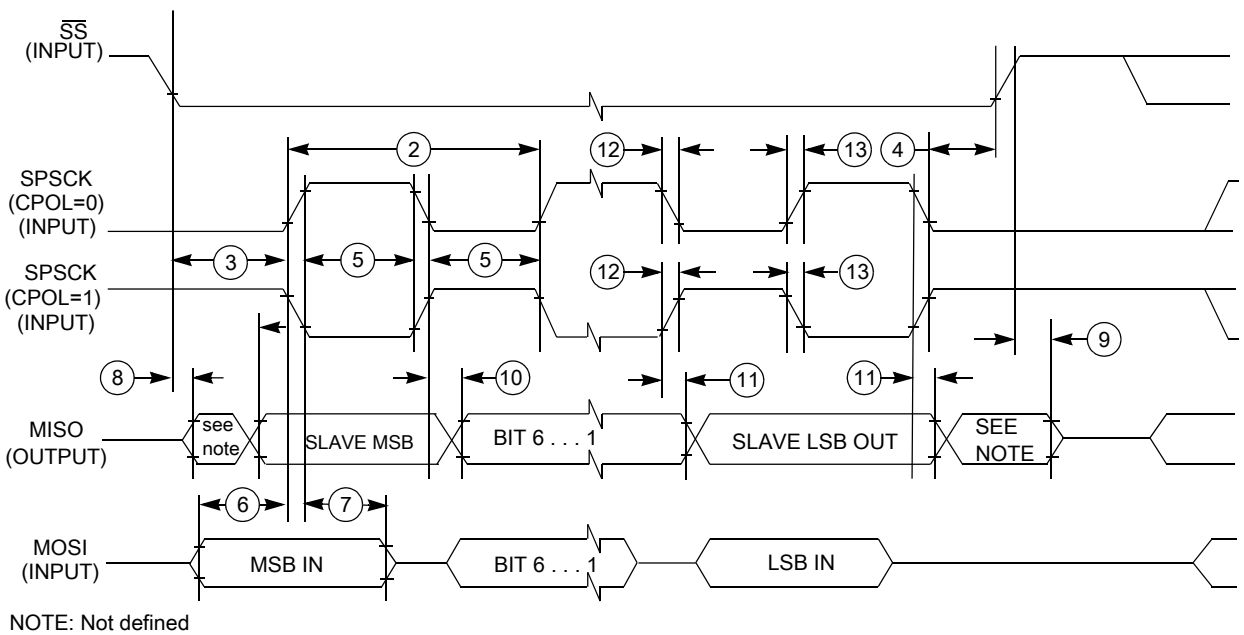

Figure 19. SPI slave mode timing (CPHA = 0)

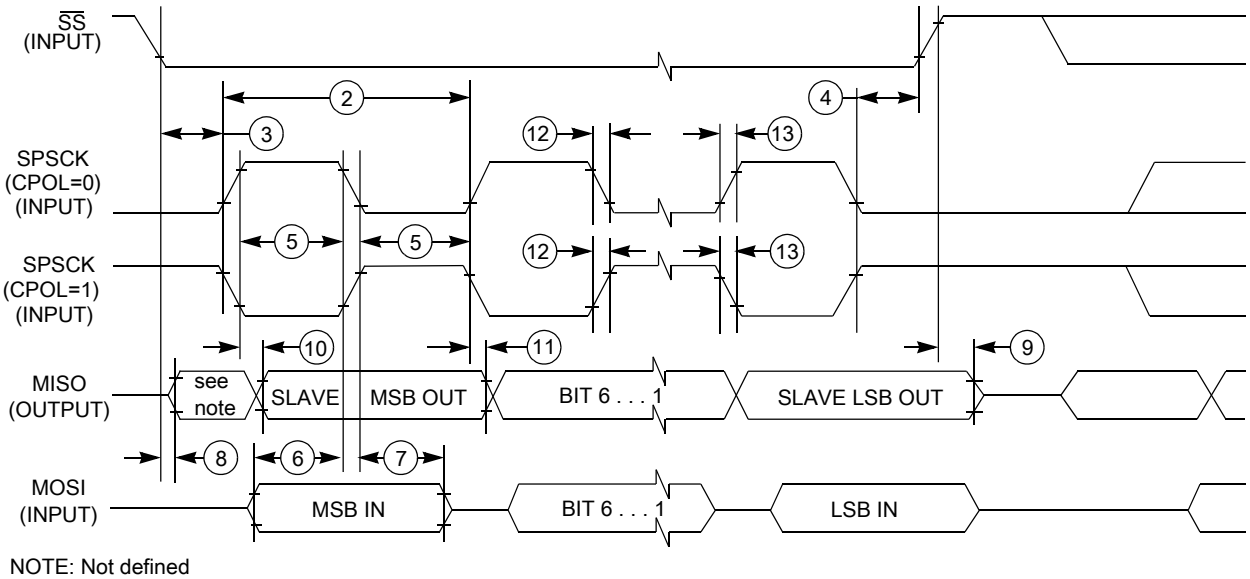

Figure 20. SPI slave mode timing (CPHA=1)

5.5.2 MSCAN

Table 16. MSCAN wake-up pulse characteristics

Parameter	Symbol	Min	Typ	Max	Unit
MSCAN wakeup dominant pulse filtered	t_{WUP}	-	-	1.5	µs
MSCAN wakeup dominant pulse pass	t_{WUP}	5	-	-	µs

6 Dimensions

6.1 Obtaining package dimensions

Package dimensions are provided in package drawings.

To find a package drawing, go to **nxp.com** and perform a keyword search for the drawing's document number:

If you want the drawing for this package	Then use this document number
64-pin LQFP	98ASS23234W
80-pin LQFP	98ASS23237W

7 Pinout

7.1 Signal multiplexing and pin assignments

For the pin muxing details see section Signal Multiplexing and Signal Descriptions of KEA128 Reference Manual.

8 Revision History

The following table provides a revision history for this document.

Table 17. Revision History

Rev. No.	Date	Substantial Changes
Rev. 1	11 March 2014	Initial Release
Rev. 2	18 June 2014	• Parameter Classification section is removed. • Classification column is removed from all the tables in the document. • New section added - Supply current characteristics.
Rev. 3	18 July 2014	• Added supported part numbers. • ESD handling ratings section is updated. • Figures in DC characteristics section are updated. • Specs updated in following tables: • Table 9.
Rev. 4	03 Sept 2014	• Data Sheet type changed to "Technical Data".
Rev. 5	23 September 2019	• Added row T_{ramp} in Table 2.

How to Reach Us:

Home Page:
nxp.com

Web Support:
nxp.com/support

Information in this document is provided solely to enable system and software implementers to use NXP products. There are no express or implied copyright licenses granted hereunder to design or fabricate any integrated circuits based on the information in this document. NXP reserves the right to make changes without further notice to any products herein.

NXP makes no warranty, representation, or guarantee regarding the suitability of its products for any particular purpose, nor does NXP assume any liability arising out of the application or use of any product or circuit, and specifically disclaims any and all liability, including without limitation consequential or incidental damages. “Typical” parameters that may be provided in NXP data sheets and/or specifications can and do vary in different applications, and actual performance may vary over time. All operating parameters, including “typicals,” must be validated for each customer application by customer’s technical experts. NXP does not convey any license under its patent rights nor the rights of others. NXP sells products pursuant to standard terms and conditions of sale, which can be found at the following address: nxp.com/SalesTermsandConditions.

While NXP has implemented advanced security features, all products may be subject to unidentified vulnerabilities. Customers are responsible for the design and operation of their applications and products to reduce the effect of these vulnerabilities on customer's applications and products, and NXP accepts no liability for any vulnerability that is discovered. Customers should implement appropriate design and operating safeguards to minimize the risks associated with their applications and products.

NXP, the NXP logo, NXP SECURE CONNECTIONS FOR A SMARTER WORLD, COOLFLUX, EMBRACE, GREENCHIP, HITAG, I2C BUS, ICODE, JCOP, LIFE VIBES, MIFARE, MIFARE CLASSIC, MIFARE DESFire, MIFARE PLUS, MIFARE FLEX, MANTIS, MIFARE ULTRALIGHT, MIFARE4MOBILE, MIGLO, NTAG, ROADLINK, SMARTLX, SMARTMX, STARPLUG, TOPFET, TRENCHMOS, UCODE, Freescale, the Freescale logo, AltiVec, C-5, CodeTEST, CodeWarrior, ColdFire, ColdFire+, C-Ware, the Energy Efficient Solutions logo, Kinetis, Layerscape, MagniV, mobileGT, PEG, PowerQUICC, Processor Expert, QorIQ, QorIQ Qonverge, Ready Play, SafeAssure, the SafeAssure logo, StarCore, Symphony, VortiQa, Vybrid, Airfast, BeeKit, BeeStack, CoreNet, Flexis, MXC, Platform in a Package, QUICC Engine, SMARTMOS, Tower, TurboLink, and UMEMS are trademarks of NXP B.V. All other product or service names are the property of their respective owners. AMBA, Arm, Arm7, Arm7TDMI, Arm9, Arm11, Artisan, big.LITTLE, Cordio, CoreLink, CoreSight, Cortex, DesignStart, DynamIQ, Jazelle, Keil, Mali, Mbed, Mbed Enabled, NEON, POP, RealView, SecurCore, Socrates, Thumb, TrustZone, ULINK, ULINK2, ULINK-ME, ULINK-PLUS, ULINKpro, µVision, Versatile are trademarks or registered trademarks of Arm Limited (or its subsidiaries) in the US and/or elsewhere. The related technology may be protected by any or all of patents, copyrights, designs and trade secrets. All rights reserved. Oracle and Java are registered trademarks of Oracle and/or its affiliates. The Power Architecture and Power.org word marks and the Power and Power.org logos and related marks are trademarks and service marks licensed by Power.org.

© 2014–2019 NXP B.V.

Document Number S9KEA128P80M48SF0
Revision 5, 09/2019

Общество с ограниченной ответственностью «МосЧип» ИНН 7719860671 / КПП 771901001
Адрес: 105318, г.Москва, ул.Щербаковская д.3, офис 1107

Данный компонент на территории Российской Федерации

Вы можете приобрести в компании MosChip.

Для оперативного оформления запроса Вам необходимо перейти по данной ссылке:

http://moschip.ru/get-element

Вы можете разместить у нас заказ для любого Вашего проекта, будь то серийное производство или разработка единичного прибора.

В нашем ассортименте представлены ведущие мировые производители активных и пассивных электронных компонентов.

Нашей специализацией является поставка электронной компонентной базы двойного назначения, продукции таких производителей как XILINX, Intel (ex.ALTERA), Vicor, Microchip, Texas Instruments, Analog Devices, Mini-Circuits, Amphenol, Glenair.

Сотрудничество с глобальными дистрибьюторами электронных компонентов, предоставляет возможность заказывать и получать с международных складов практически любой перечень компонентов в оптимальные для Вас сроки.

На всех этапах разработки и производства наши партнеры могут получить квалифицированную поддержку опытных инженеров.

Система менеджмента качества компании отвечает требованиям в соответствии с ГОСТ Р ИСО 9001, ГОСТ РВ 0015-002 и ЭС РД 009

Офис по работе с юридическими лицами:

105318, г.Москва, ул.Щербаковская д.3, офис 1107, 1118, ДЦ «Щербаковский»

Телефон: +7 495 668-12-70 (многоканальный)

Факс: +7 495 668-12-70 (доб.304)

E-mail: info@moschip.ru

Skype отдела продаж:
moschip.ru
moschip.ru_4
moschip.ru_6
moschip.ru_9