DATA SHEET

For a complete data sheet, please also download:

- The IC06 74HC/HCT/HCU/HCMOS Logic Family Specifications
- The IC06 74HC/HCT/HCU/HCMOS Logic Package Information
- The IC06 74HC/HCT/HCU/HCMOS Logic Package Outlines

74HC/HCT4094

8-stage shift-and-store bus register

Product specification
File under Integrated Circuits, IC06

December 1990

Philips
Semiconductors

PHILIPS

FEATURES

- Output capability: standard
- I_{CC} category: MSI

GENERAL DESCRIPTION

The 74HC/HCT4094 are high-speed Si-gate CMOS devices and are pin compatible with the “4094” of the “4000B” series. They are specified in compliance with JEDEC standard no. 7A.

The 74HC/HCT4094 are 8-stage serial shift registers having a storage latch associated with each stage for strobing data from the serial input (D) to the parallel buffered 3-state outputs (QP_0 to QP_7). The parallel outputs may be connected directly to common bus lines.
Data is shifted on the positive-going clock (CP) transitions.

The data in each shift register stage is transferred to the storage register when the strobe input (STR) is HIGH. Data in the storage register appears at the outputs whenever the output enable input (OE) signal is HIGH.

Two serial outputs (QS_1 and QS_2) are available for cascading a number of “4094” devices. Data is available at QS_1 on the positive-going clock edges to allow high-speed operation in cascaded systems in which the clock rise time is fast. The same serial information is available at QS_2 on the next negative-going clock edge and is for cascading “4094” devices when the clock rise time is slow.

APPLICATIONS

- Serial-to-parallel data conversion
- Remote control holding register

QUICK REFERENCE DATA

GND = 0 V; T_{amb} = 25 °C; $t_r = t_f$ = 6 ns

SYMBOL	PARAMETER	CONDITIONS	TYPICAL		UNIT
			HC	HCT	
t_{PHL}/ t_{PLH}	propagation delay	C_L = 15 pF; V_{CC} = 5 V			
	CP to QS_1		15	19	ns
	CP to QS_2		13	18	ns
	CP to QP_n		20	21	ns
	STR to QP_n		18	19	ns
f_{max}	maximum clock frequency		95	86	MHz
C_I	input capacitance		3.5	3.5	pF
C_{PD}	power dissipation capacitance per package	notes 1 and 2	83	92	pF

Notes

1. C_{PD} is used to determine the dynamic power dissipation (P_D in µW):

   $P_D = C_{PD} \times V_{CC}^2 \times f_i + \Sigma (C_L \times V_{CC}^2 \times f_o)$ where:

   f_i = input frequency in MHz

   f_o = output frequency in MHz

   $\Sigma (C_L \times V_{CC}^2 \times f_o)$ = sum of outputs

   C_L = output load capacitance in pF

   V_{CC} = supply voltage in V
2. For HC the condition is V_I = GND to V_{CC}
   For HCT the condition is V_I = GND to V_{CC} – 1.5 V

ORDERING INFORMATION

See *“74HC/HCT/HCU/HCMOS Logic Package Information”*.

PIN DESCRIPTION

PIN NO.	SYMBOL	NAME AND FUNCTION
1	STR	strobe input
2	D	serial input
3	CP	clock input
4, 5, 6, 7,14, 13, 12, 11	QP_0 to QP_7	parallel outputs
8	GND	ground (0 V)
9, 10	QS_1, QS_2	serial outputs
15	OE	output enable input
16	V_{CC}	positive supply voltage

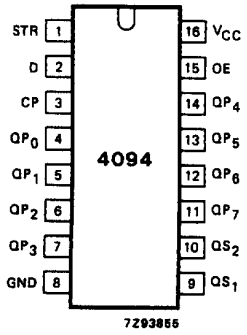

Fig.1 Pin configuration.

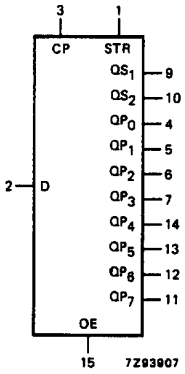

Fig.2 Logic symbol.

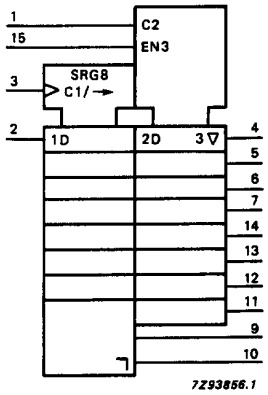

Fig.3 IEC logic symbol.

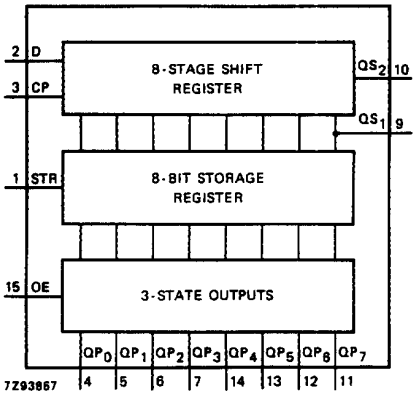

Fig.4 Functional diagram.

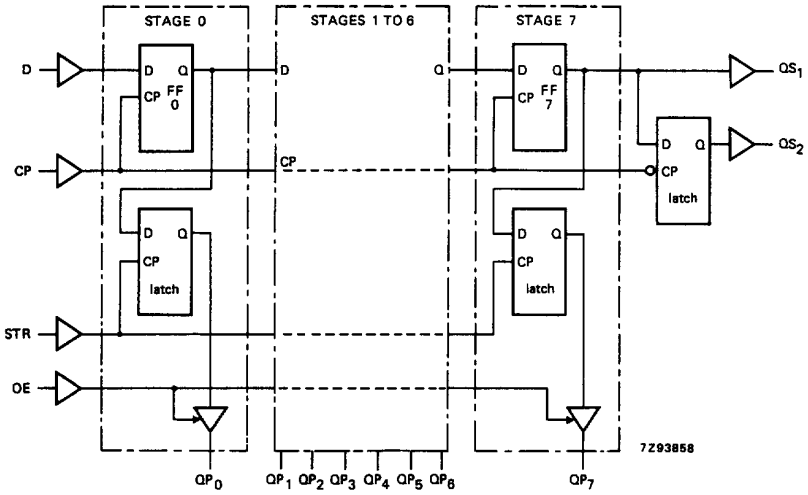

Fig.5 Logic diagram.

FUNCTION TABLE

INPUTS				PARALLEL OUTPUTS		SERIAL OUTPUTS	
CP	**OE**	**STR**	**D**	**QP_0**	**QP_n**	**QS_1**	**QS_2**
↑	L	X	X	Z	Z	Q'_6	NC
↓	L	X	X	Z	Z	NC	QP_7
↑	H	L	X	NC	NC	Q'_6	NC
↑	H	H	L	L	QP_{n-1}	Q'_6	NC
↑	H	H	H	H	QP_{n-1}	Q'_6	NC
↓	H	H	H	NC	NC	NC	QP_7

Notes

1. H = HIGH voltage level
   L = LOW voltage level
   X = don't care
   Z = high impedance OFF-state
   NC= no change
   ↑ = LOW-to-HIGH CP transition
   ↓ = HIGH-to-LOW CP transition
   Q'_6 = the information in the seventh register stage is transferred to the 8th register stage and QS_n output at the positive clock edge

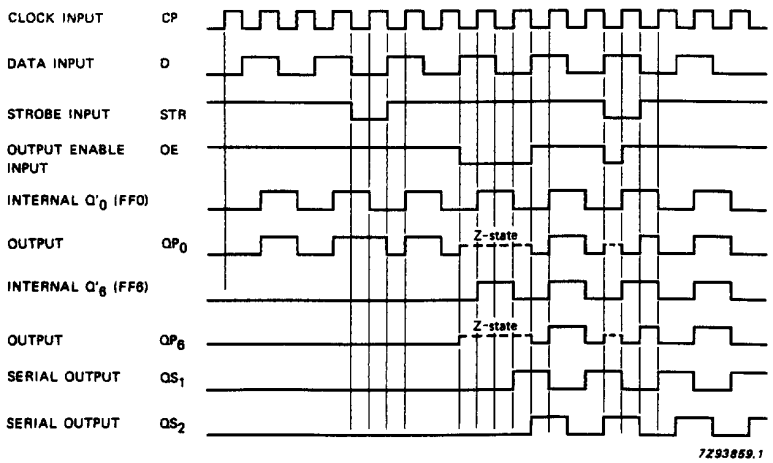

Fig.6 Timing diagram.

DC CHARACTERISTICS FOR 74HC

For the DC characteristics see *"74HC/HCT/HCU/HCMOS Logic Family Specifications"*.

Output capability: standard
I_{CC} category: MSI

AC CHARACTERISTICS FOR 74HC

GND = 0 V; $t_r = t_f = 6$ ns; $C_L = 50$ pF

SYMBOL	PARAMETER	T_{amb} (°C)							UNIT	TEST CONDITIONS	
		74HC								V_{CC} (V)	WAVEFORMS
		+25			−40 to +85		−40 to +125				
		min.	typ.	max.	min.	max.	min.	max.			
t_{PHL}/ t_{PLH}	propagation delay CP to QS_1		50 18 14	150 30 26		190 38 33		225 45 38	ns	2.0 4.5 6.0	Fig.7
t_{PHL}/ t_{PLH}	propagation delay CP to QS_2		44 16 13	135 27 23		170 34 29		205 41 35	ns	2.0 4.5 6.0	Fig.7
t_{PHL}/ t_{PLH}	propagation delay CP to QP_n		63 23 18	195 39 33		245 49 42		295 59 50	ns	2.0 4.5 6.0	Fig.7
t_{PHL}/ t_{PLH}	propagation delay STR to QP_n		58 21 17	180 36 31		225 45 38		270 54 46	ns	2.0 4.5 6.0	Fig.8
t_{PZH}/ t_{PZL}	3-state output enable time OE to QP_n		55 20 16	175 35 30		220 44 37		265 53 45	ns	2.0 4.5 6.0	Fig.9
t_{PHZ}/ t_{PLZ}	3-state output disable time OE to QP_n		41 15 12	125 25 21		155 31 26		190 38 32	ns	2.0 4.5 6.0	Fig.9
t_{THL}/ t_{TLH}	output transition time		19 7 6	75 15 13		95 19 16		110 22 19	ns	2.0 4.5	Fig.7
t_W	clock pulse width HIGH or LOW	80 16 14	14 5 4		100 20 17		120 24 20		ns	2.0 4.5 6.0	Fig.7
t_W	strobe pulse width HIGH	80 16 14	14 5 4		100 20 17		120 24 20		ns	2.0 4.5 6.0	Fig.8
t_{su}	set-up time D to CP	50 10 9	14 5 4		65 13 11		75 15 13		ns	2.0 4.5 6.0	Fig.10
t_{su}	set-up time CP to STR	100 20 17	28 10 8		125 25 21		150 30 26		ns	2.0 4.5 6.0	Fig.8

SYMBOL	PARAMETER	T_{amb} (°C)							UNIT	TEST CONDITIONS	
		74HC								V_{CC} (V)	WAVEFORMS
		+25			−40 to +85		−40 to +125				
		min.	typ.	max.	min.	max.	min.	max.			
t_h	hold time D to CP	3 3 3	–6 –2 –2		3 3 3		3 3 3		ns	2.0 4.5 6.0	Fig.10
t_h	hold time CP to STR	0 0 0	–14 –5 –4		0 0 0		0 0 0		ns	2.0 4.5 6.0	Fig.8
f_{max}	maximum clock pulse frequency	6.0 30 35	28 87 103		4.8 24 28		4.0 20 24		MHz	2.0 4.5 6.0	Fig.7

DC CHARACTERISTICS FOR 74HCT

For the DC characteristics see *"74HC/HCT/HCU/HCMOS Logic Family Specifications"*.

Output capability: standard
I_{CC} category: MSI

Note to HCT types

The value of additional quiescent supply current (ΔI_{CC}) for a unit load of 1 is given in the family specifications.
To determine ΔI_{CC} per input, multiply this value by the unit load coefficient shown in the table below.

INPUT	UNIT LOAD COEFFICIENT
OE, CP	1.50
D	0.40
STR	1.00

AC CHARACTERISTICS FOR 74HCT

GND = 0 V; $t_r = t_f = 6$ ns; $C_L = 50$ pF

SYMBOL	PARAMETER	T_{amb} (°C)							UNIT	TEST CONDITIONS	
		74HCT								V_{CC} (V)	WAVEFORMS
		+25			−40 to +85		−40 to +125				
		min.	typ.	max.	min.	max.	min.	max.			
t_{PHL}/ t_{PLH}	propagation delay CP to QS_1		23	39		49		59	ns	4.5	Fig.7
t_{PHL}/ t_{PLH}	propagation delay CP to QS_2		21	36		45		54	ns	4.5	Fig.7
t_{PHL}/ t_{PLH}	propagation delay CP to QP_n		25	43		54		65	ns	4.5	Fig.7
t_{PHL}/ t_{PLH}	propagation delay STR to QP_n		22	39		49		59	ns	4.5	Fig.8
t_{PZH}/ t_{PZL}	3-state output enable time OE to QP_n		20	35		44		53	ns	4.5	Fig.9
t_{PHZ}/ t_{PLZ}	3-state output disable time OE to QP_n		21	35		44		53	ns	4.5	Fig.9
t_{THL}/ t_{TLH}	output transition time		7	15		19		22	ns	4.5	Fig.7
t_W	clock pulse width HIGH or LOW	16	7		20		24		ns	4.5	Fig.7
t_W	strobe pulse width HIGH	16	5		20		24		ns	4.5	Fig.8
t_{su}	set-up time D to CP	10	4		13		15		ns	4.5	Fig.10
t_{su}	set-up time CP to STR	20	9		25		30		ns	4.5	Fig.8
t_h	hold time D to CP	4	0		4		4		ns	4.5	Fig.10
t_h	hold time CP to STR	0	–4		0		0		ns	4.5	Fig.8
f_{max}	maximum clock pulse frequency	30	80		24		20		MHz	4.5	Fig.7

AC WAVEFORMS

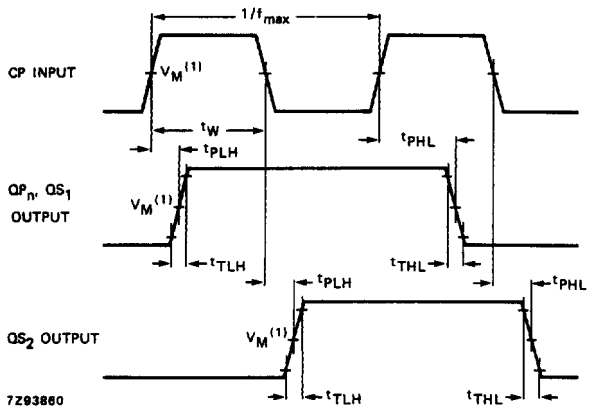

(1) HC : V_M = 50%; V_I = GND to V_{CC}.
HCT: V_M = 1.3 V; V_I = GND to 3 V.

Fig.7 Waveforms showing the clock (CP) to output (QP_n, QS_1, QS_2) propagation delays, the clock pulse width and the maximum clock frequency.

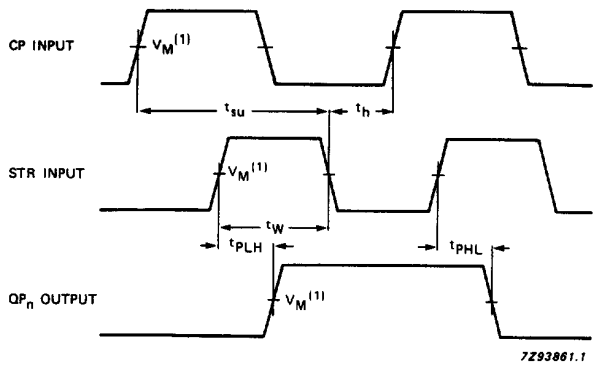

(1) HC : V_M = 50%; V_I = GND to V_{CC}.
HCT: V_M = 1.3 V; V_I = GND to 3 V.

Fig.8 Waveforms showing the strobe (STR) to output (QP_n) propagation delays and the strobe pulse width and the clock set-up and hold times for the strobe input.

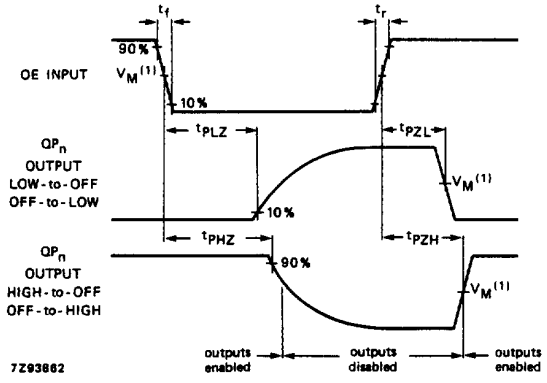

(1) HC : V_M = 50%; V_I = GND to V_{CC}.
HCT: V_M = 1.3 V; V_I = GND to 3 V.

Fig.9 Waveforms showing the 3-state enable and disable times for input OE.

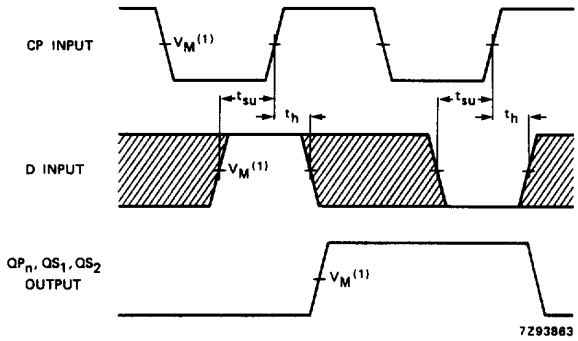

The shaded areas indicate when the input is permitted to change for predictable output performance.

(1) HC : V_M = 50%; V_I = GND to V_{CC}.
HCT: V_M = 1.3 V; V_I = GND to 3 V.

Fig.10 Waveforms showing the data set-up and hold times for the data input (D).

PACKAGE OUTLINES

See *"74HC/HCT/HCU/HCMOS Logic Package Outlines"*.

Общество с ограниченной ответственностью «МосЧип» ИНН 7719860671 / КПП 771901001
Адрес: 105318, г.Москва, ул.Щербаковская д.3, офис 1107

Данный компонент на территории Российской Федерации

Вы можете приобрести в компании MosChip.

Для оперативного оформления запроса Вам необходимо перейти по данной ссылке:

http://moschip.ru/get-element

Вы можете разместить у нас заказ для любого Вашего проекта, будь то серийное производство или разработка единичного прибора.

В нашем ассортименте представлены ведущие мировые производители активных и пассивных электронных компонентов.

Нашей специализацией является поставка электронной компонентной базы двойного назначения, продукции таких производителей как XILINX, Intel (ex.ALTERA), Vicor, Microchip, Texas Instruments, Analog Devices, Mini-Circuits, Amphenol, Glenair.

Сотрудничество с глобальными дистрибьюторами электронных компонентов, предоставляет возможность заказывать и получать с международных складов практически любой перечень компонентов в оптимальные для Вас сроки.

На всех этапах разработки и производства наши партнеры могут получить квалифицированную поддержку опытных инженеров.

Система менеджмента качества компании отвечает требованиям в соответствии с ГОСТ Р ИСО 9001, ГОСТ РВ 0015-002 и ЭС РД 009

Офис по работе с юридическими лицами:

105318, г.Москва, ул.Щербаковская д.3, офис 1107, 1118, ДЦ «Щербаковский»

Телефон: +7 495 668-12-70 (многоканальный)

Факс: +7 495 668-12-70 (доб.304)

E-mail: info@moschip.ru

Skype отдела продаж:
moschip.ru
moschip.ru_4
moschip.ru_6
moschip.ru_9