THIS DRAWING IS UNPUBLISHED — RELEASED FOR PUBLICATION 2011
© COPYRIGHT 2011 TE Connectivity — ALL RIGHTS RESERVED.

PROJECT NO	LOC	DIST
EGATN09356	A1	-

REVISIONS

F	LTR	DESCRIPTION	DATE	DWN	APVD
	E6	MATERIAL INPUT BY LOWER PART CORRECTED	23NOV2016	RM	PNI
	E7	PART-NO. 4-2112780-7/-8/-9 ADDED	14DEC2016	RM	PNI
	F	UPPER PART CHANGED	27FEB2017	RM	PNI
	F1	NOTE 8 ADDED	22MAY2017	RM	PNI

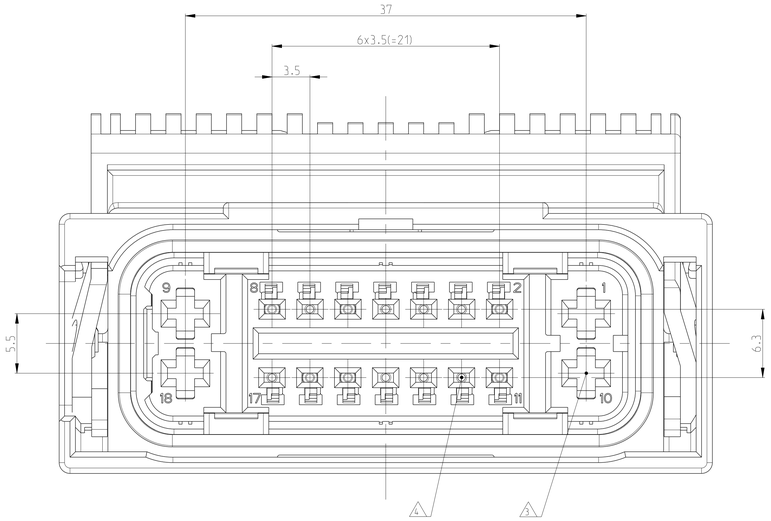

6 DELIVERY CONDITION
Anlieferungszustand
2:1

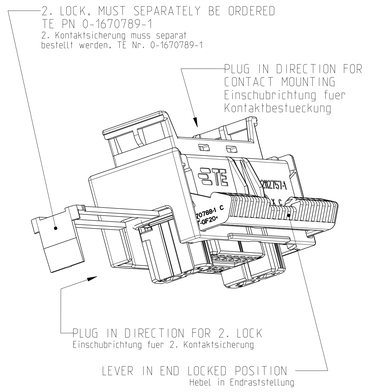

INSTALLATION POSITION ACCORDING INSERTION OF THE CONTACTS AND THE 2.LOCK
Einbaustellung nach der Bestueckung von den
Kontakten und der 2. Kontaktsicherung

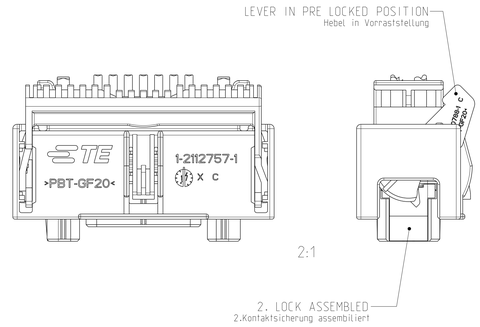

COVER FOR HOUSING LOOSE PIECE TE PN 0-2112758-1 OPTIONAL LEFT OR RIGHT CLIP-ON
Abdeckkappe fuer Buchsengehaeuse wird
separat beigestellt TE NR. 0-2112758-1
Abdeckkappe optional links oder rechts aufsteckbar

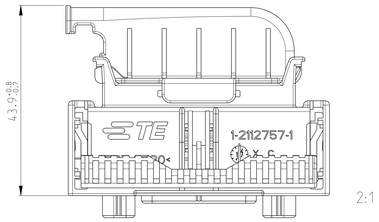

LEFT / links
1:1

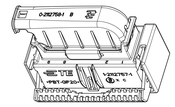

RIGHT / rechts
1:1

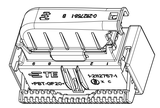

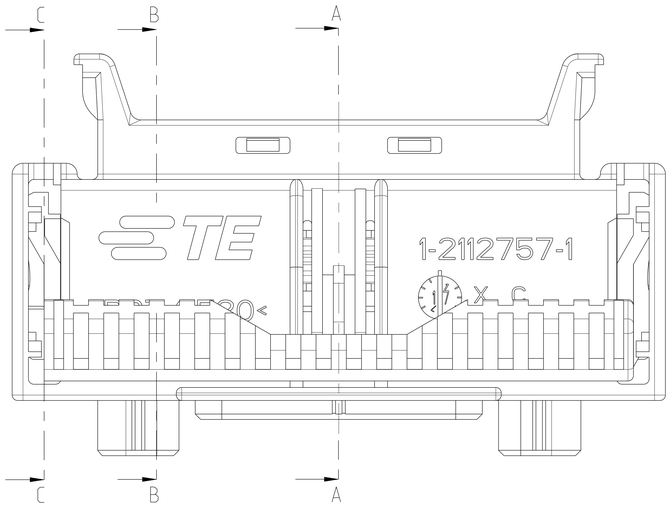

B-B

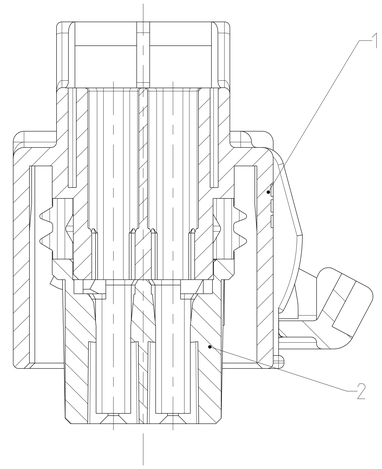

A-A

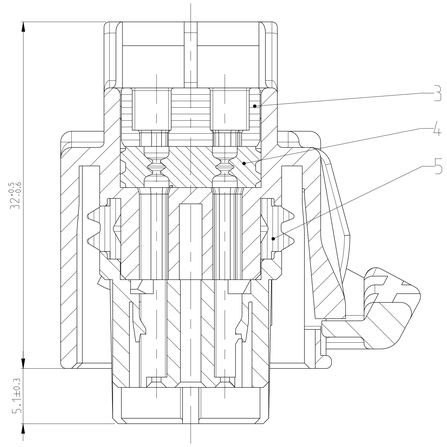

8 INSTALLATION POSITION ACC.INSERTION OF THE CONTACTS/BLIND PLUG AND THE 2.LOCK
Einbaustellung nach der Bestueckung von
den Kontakten/Blindstopfen und der 2. Kontaktsicherung

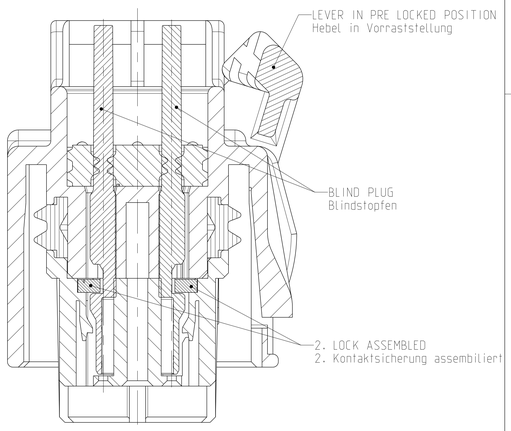

F-F

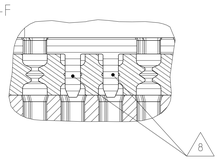

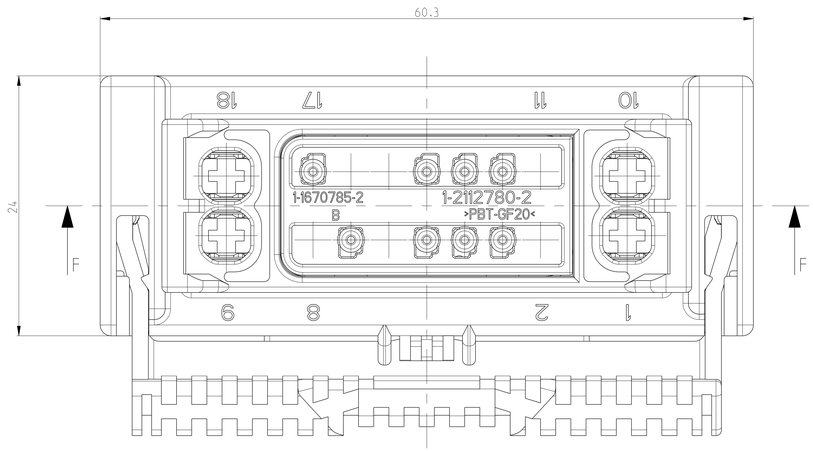

C-C

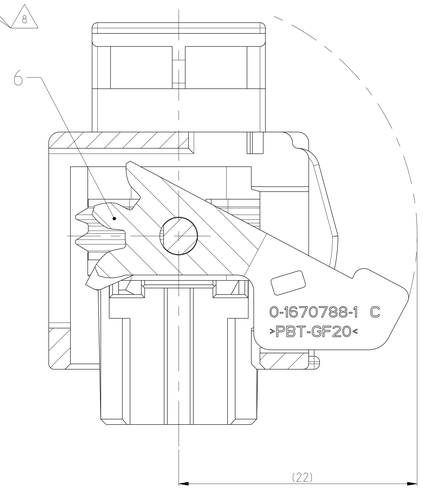

NOTES:
Bemerkungen:

1 PACKAGING: LOOSE PIECE INTO CARTON
Verpackung: Schuettgut in Karton

2 2.LOCK SEE TE DRAWING NO.1670789
COVER SEE TE DRAWING NO.2112758
2.Kontaktsicherung siehe TE Zeichnung Nr.1670789
Abdeckkappe siehe TE Zeichnung Nr.2112758

3 CAVITY 1, 9, 10 AND 18 SUITABLE FOR CONTACT:
2.8mm SENSOR FLAT CONTACT
0967543 (STRIP) OR 0967717 (LOOSE PIECE) >1.5mm² TO 2.5mm²
AND 0828905 (SINGLE WIRE SEAL) INSULATION DIA. 2.2mm TO 3.0mm

Kammer 1, 9, 10 und 18 passend fuer Kontakt:
2.8mm Sensor Flachkontakt
0967543 (Band) oder 0967717 (vereinzelt) >1.5mm² bis 2.5mm²
und 0828905 (Einzeldichtung) Isolationsdurchmesser 2.2mm bis 3.0mm

4 CAVITY 2 TO 8 AND 11 TO 17 SUITABLE FOR CONTACT:
MCON-1.2 CLEAN BODY
1534594 (STRIP) OR 1534595 (LOOSE PIECE) 0.35mm²
INSULATION DIA. 1.1mm TO 1.75mm
1670144 (STRIP) OR 1670145 (LOOSE PIECE) 0.5mm² TO 0.75mm²
INSULATION DIA. 1.4mm TO 1.9mm

Kammer 2 bis 8 und 11 bis 17 passend fuer Kontakt:
MCON-1.2 CLEAN BODY
1534594 (Band) und 1534595 (vereinzelt) 0.35mm²
Isolationsdurchmesser 1.1mm bis 1.75mm
1670144 (Band) und 1670145 (vereinzelt) 0.5mm² bis 0.75mm²
Isolationsdurchmesser 1.4mm bis 1.9mm

5 CONTACT SUFACE ACCORDING TO MATING CONNECTOR
Kontaktoberflaeche entsprechend dem Gegenstecker

ORDER OF ASSEMBLY:
1.) CONTACT MOUNTING
2.) 2.LOCK MOUNTING
3.) LEVER IN PRE LOCKED POSITION
4.) OPTIONAL COVER

6 Reienfolge der Bestueckung:
1.) Kontaktbestueckung
2.) 2.Kontaktsicherung assemblieren
3.) Hebel in Vorrastellung
4.) Optional Abdeckkappe

7 INTERFACE DRAWING NO.114-18801
Schnittstellenzeichnung Nr.114-188018

8 SUITABLE BLIND PLUG FOR THE CAVITYS 2 TO 8 AND 11 TO 17
SEE TE PART-NO.2286476-1
Passender Blindstopfen fuer die Kammern 2 bis 8 und 11 bis 17
siehe TE Teile-Nr.2286476-1

1:1

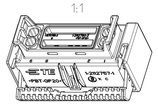

1- -2
AS SHOWN (DELIVERY CONDITION)
WIE GEZEICHNET (Anlieferungszustand)

THIS DRAWING IS A CONTROLLED DOCUMENT.	DWN P.Nickelfeld 15MAR2010	TE Connectivity	
DIMENSIONS: mm	CHK J.Ryll 09APR2010	NAME 18POS. MIXED REC HSG. ASSY 18polig Buchsengehaeuse Assy	
TOLERANCES UNLESS OTHERWISE SPECIFIED: ANGLES ±1° LINEAR DIM. NON-ACCUMULATING 0-PLC ±- 1-PLC ±- 2-PLC ±- 3-PLC ±- 4-PLC ±- ANGLES ±1°	APVD D.Duenkel	PRODUCT SPEC 108-94094	
		APPLICATION SPEC 114-18853	
MATERIAL -	FINISH -	WEIGHT -	SIZE A0 / CAGE CODE 00779 / DRAWING NO C-2112780 / RESTRICTED TO
		CUSTOMER DRAWING	SCALE 5:1 / SHEET 1 OF 2 / REV F2

4806 (3/11)

THIS DRAWING IS UNCONTROLLED | RELEASED FOR PUBLICATION 2011
© COPYRIGHT 2011 TE Connectivity ALL RIGHTS RESERVED.

PROJECT NO	LOC	DIST
EGATN09356	A1	–

REVISIONS

P	LTR	DESCRIPTION	DATE	DWN	APVD
	–	SEE SHEET 1	–	–	–

COD.	REV.	TE ASSY NO.	CLOSED CAVITYS	VERSION	QTY	DESCRIPTION	MATERIAL	COLOUR	ITEM NO
A	F	5-2112780-0	2 3 11 12	AM	1	LEVER	PBT-GF20	BLACK	6
					1	RADIAL SEAL	ELASTOSIL	NATURE	5
					1	FAMILY SEAL, MCON-1.2 CB	ELASTOSIL	NATURE	4
					1	COVER FAMILY SEAL, MCON-1.2 CB	PBT-GF20	BLACK	3
					1	18POS. MIXED REC HSG, LOWER PART	PBT-GF30	BLACK	2
					1	18POS. MIXED REC HSG, UPPER PART	PBT-GF20	BLACK	1
A	F	4-2112780-9	5 7 8 15 16	AL	1	LEVER	PBT-GF20	BLACK	6
					1	RADIAL SEAL	ELASTOSIL	NATURE	5
					1	FAMILY SEAL, MCON-1.2 CB	ELASTOSIL	NATURE	4
					1	COVER FAMILY SEAL, MCON-1.2 CB	PBT-GF20	BLACK	3
					1	18POS. MIXED REC HSG, LOWER PART	PBT-GF30	BLACK	2
					1	18POS. MIXED REC HSG, UPPER PART	PBT-GF20	BLACK	1
A	F	4-2112780-8	6 7 8 16	AK	1	LEVER	PBT-GF20	BLACK	6
					1	RADIAL SEAL	ELASTOSIL	NATURE	5
					1	FAMILY SEAL, MCON-1.2 CB	ELASTOSIL	NATURE	4
					1	COVER FAMILY SEAL, MCON-1.2 CB	PBT-GF20	BLACK	3
					1	18POS. MIXED REC HSG, LOWER PART	PBT-GF30	BLACK	2
					1	18POS. MIXED REC HSG, UPPER PART	PBT-GF20	BLACK	1
A	F	4-2112780-7	2 6 7 8 11 15 16	AI	1	LEVER	PBT-GF20	BLACK	6
					1	RADIAL SEAL	ELASTOSIL	NATURE	5
					1	FAMILY SEAL, MCON-1.2 CB	ELASTOSIL	NATURE	4
					1	COVER FAMILY SEAL, MCON-1.2 CB	PBT-GF20	BLACK	3
					1	18POS. MIXED REC HSG, LOWER PART	PBT-GF30	BLACK	2
					1	18POS. MIXED REC HSG, UPPER PART	PBT-GF20	BLACK	1
A	F	4-2112780-6	12 16	AH	1	LEVER	PBT-GF20	BLACK	6
					1	RADIAL SEAL	ELASTOSIL	NATURE	5
					1	FAMILY SEAL, MCON-1.2 CB	ELASTOSIL	NATURE	4
					1	COVER FAMILY SEAL, MCON-1.2 CB	PBT-GF20	BLACK	3
					1	18POS. MIXED REC HSG, LOWER PART	PBT-GF30	BLACK	2
					1	18POS. MIXED REC HSG, UPPER PART	PBT-GF20	BLACK	1
A	F	4-2112780-5	3 12 16	AG	1	LEVER	PBT-GF20	BLACK	6
					1	RADIAL SEAL	ELASTOSIL	NATURE	5
					1	FAMILY SEAL, MCON-1.2 CB	ELASTOSIL	NATURE	4
					1	COVER FAMILY SEAL, MCON-1.2 CB	PBT-GF20	BLACK	3
					1	18POS. MIXED REC HSG, LOWER PART	PBT-GF30	BLACK	2
					1	18POS. MIXED REC HSG, UPPER PART	PBT-GF20	BLACK	1
A	F	4-2112780-4	3 12 14 16	AF	1	LEVER	PBT-GF20	BLACK	6
					1	RADIAL SEAL	ELASTOSIL	NATURE	5
					1	FAMILY SEAL, MCON-1.2 CB	ELASTOSIL	NATURE	4
					1	COVER FAMILY SEAL, MCON-1.2 CB	PBT-GF20	BLACK	3
					1	18POS. MIXED REC HSG, LOWER PART	PBT-GF30	BLACK	2
					1	18POS. MIXED REC HSG, UPPER PART	PBT-GF20	BLACK	1
A	F	4-2112780-3	5 6 7 15 16	AD	1	LEVER	PBT-GF20	BLACK	6
					1	RADIAL SEAL	ELASTOSIL	NATURE	5
					1	FAMILY SEAL, MCON-1.2 CB	ELASTOSIL	NATURE	4
					1	COVER FAMILY SEAL, MCON-1.2 CB	PBT-GF20	BLACK	3
					1	18POS. MIXED REC HSG, LOWER PART	PBT-GF30	BLACK	2
					1	18POS. MIXED REC HSG, UPPER PART	PBT-GF20	BLACK	1
A	F	4-2112780-2	2 8 11 15	AC	1	LEVER	PBT-GF20	BLACK	6
					1	RADIAL SEAL	ELASTOSIL	NATURE	5
					1	FAMILY SEAL, MCON-1.2 CB	ELASTOSIL	NATURE	4
					1	COVER FAMILY SEAL, MCON-1.2 CB	PBT-GF20	BLACK	3
					1	18POS. MIXED REC HSG, LOWER PART	PBT-GF30	BLACK	2
					1	18POS. MIXED REC HSG, UPPER PART	PBT-GF20	BLACK	1
A	F	4-2112780-1	2 3 11 16	AB	1	LEVER	PBT-GF20	BLACK	6
					1	RADIAL SEAL	ELASTOSIL	NATURE	5
					1	FAMILY SEAL, MCON-1.2 CB	ELASTOSIL	NATURE	4
					1	COVER FAMILY SEAL, MCON-1.2 CB	PBT-GF20	BLACK	3
					1	18POS. MIXED REC HSG, LOWER PART	PBT-GF30	BLACK	2
					1	18POS. MIXED REC HSG, UPPER PART	PBT-GF20	BLACK	1
A	F	4-2112780-0	16	AA	1	LEVER	PBT-GF20	BLACK	6
					1	RADIAL SEAL	ELASTOSIL	NATURE	5
					1	FAMILY SEAL, MCON-1.2 CB	ELASTOSIL	NATURE	4
					1	COVER FAMILY SEAL, MCON-1.2 CB	PBT-GF20	BLACK	3
					1	18POS. MIXED REC HSG, LOWER PART	PBT-GF30	BLACK	2
					1	18POS. MIXED REC HSG, UPPER PART	PBT-GF20	BLACK	1
A	F	3-2112780-9	5 8 15 16 17	Y	1	LEVER	PBT-GF20	BLACK	6
					1	RADIAL SEAL	ELASTOSIL	NATURE	5
					1	FAMILY SEAL, MCON-1.2 CB	ELASTOSIL	NATURE	4
					1	COVER FAMILY SEAL, MCON-1.2 CB	PBT-GF20	BLACK	3
					1	18POS. MIXED REC HSG, LOWER PART	PBT-GF30	BLACK	2
					1	18POS. MIXED REC HSG, UPPER PART	PBT-GF20	BLACK	1
A	F	3-2112780-8	11	N	1	LEVER	PBT-GF20	BLACK	6
					1	RADIAL SEAL	ELASTOSIL	NATURE	5
					1	FAMILY SEAL, MCON-1.2 CB	ELASTOSIL	NATURE	4
					1	COVER FAMILY SEAL, MCON-1.2 CB	PBT-GF20	BLACK	3
					1	18POS. MIXED REC HSG, LOWER PART	PBT-GF30	BLACK	2
					1	18POS. MIXED REC HSG, UPPER PART	PBT-GF20	BLACK	1
A	F	3-2112780-7	2 11 12	M	1	LEVER	PBT-GF20	BLACK	6
					1	RADIAL SEAL	ELASTOSIL	NATURE	5
					1	FAMILY SEAL, MCON-1.2 CB	ELASTOSIL	NATURE	4
					1	COVER FAMILY SEAL, MCON-1.2 CB	PBT-GF20	BLACK	3
					1	18POS. MIXED REC HSG, LOWER PART	PBT-GF30	BLACK	2
					1	18POS. MIXED REC HSG, UPPER PART	PBT-GF20	BLACK	1
A	F	3-2112780-6	2 11 12 14 16	X	1	LEVER	PBT-GF20	BLACK	6
					1	RADIAL SEAL	ELASTOSIL	NATURE	5
					1	FAMILY SEAL, MCON-1.2 CB	ELASTOSIL	NATURE	4
					1	COVER FAMILY SEAL, MCON-1.2 CB	PBT-GF20	BLACK	3
					1	18POS. MIXED REC HSG, LOWER PART	PBT-GF30	BLACK	2
					1	18POS. MIXED REC HSG, UPPER PART	PBT-GF20	BLACK	1
A	F	3-2112780-5	4 15 16	W	1	LEVER	PBT-GF20	BLACK	6
					1	RADIAL SEAL	ELASTOSIL	NATURE	5
					1	FAMILY SEAL, MCON-1.2 CB	ELASTOSIL	NATURE	4
					1	COVER FAMILY SEAL, MCON-1.2 CB	PBT-GF20	BLACK	3
					1	18POS. MIXED REC HSG, LOWER PART	PBT-GF30	BLACK	2
					1	18POS. MIXED REC HSG, UPPER PART	PBT-GF20	BLACK	1
A	F	3-2112780-4	2 15 16	V	1	LEVER	PBT-GF20	BLACK	6
					1	RADIAL SEAL	ELASTOSIL	NATURE	5
					1	FAMILY SEAL, MCON-1.2 CB	ELASTOSIL	NATURE	4
					1	COVER FAMILY SEAL, MCON-1.2 CB	PBT-GF20	BLACK	3
					1	18POS. MIXED REC HSG, LOWER PART	PBT-GF30	BLACK	2
					1	18POS. MIXED REC HSG, UPPER PART	PBT-GF20	BLACK	1
A	F	3-2112780-3	2 6 11 15	U	1	LEVER	PBT-GF20	BLACK	6
					1	RADIAL SEAL	ELASTOSIL	NATURE	5
					1	FAMILY SEAL, MCON-1.2 CB	ELASTOSIL	NATURE	4
					1	COVER FAMILY SEAL, MCON-1.2 CB	PBT-GF20	BLACK	3
					1	18POS. MIXED REC HSG, LOWER PART	PBT-GF30	BLACK	2
					1	18POS. MIXED REC HSG, UPPER PART	PBT-GF20	BLACK	1
A	F	3-2112780-2	2 11 16	T	1	LEVER	PBT-GF20	BLACK	6
					1	RADIAL SEAL	ELASTOSIL	NATURE	5
					1	FAMILY SEAL, MCON-1.2 CB	ELASTOSIL	NATURE	4
					1	COVER FAMILY SEAL, MCON-1.2 CB	PBT-GF20	BLACK	3
					1	18POS. MIXED REC HSG, LOWER PART	PBT-GF30	BLACK	2
					1	18POS. MIXED REC HSG, UPPER PART	PBT-GF20	BLACK	1
A	F	3-2112780-1	2 11	S	1	LEVER	PBT-GF20	BLACK	6
					1	RADIAL SEAL	ELASTOSIL	NATURE	5
					1	FAMILY SEAL, MCON-1.2 CB	ELASTOSIL	NATURE	4
					1	COVER FAMILY SEAL, MCON-1.2 CB	PBT-GF20	BLACK	3
					1	18POS. MIXED REC HSG, LOWER PART	PBT-GF30	BLACK	2
					1	18POS. MIXED REC HSG, UPPER PART	PBT-GF20	BLACK	1
A	F	2-2112780-8	2 11 12 16	R	1	LEVER	PBT-GF20	BLACK	6
					1	RADIAL SEAL	ELASTOSIL	NATURE	5
					1	FAMILY SEAL, MCON-1.2 CB	ELASTOSIL	NATURE	4
					1	COVER FAMILY SEAL, MCON-1.2 CB	PBT-GF20	BLACK	3
					1	18POS. MIXED REC HSG, LOWER PART	PBT-GF30	BLACK	2
					1	18POS. MIXED REC HSG, UPPER PART	PBT-GF20	BLACK	1
A	F	2-2112780-7	2 11 15 16	Q	1	LEVER	PBT-GF20	BLACK	6
					1	RADIAL SEAL	ELASTOSIL	NATURE	5
					1	FAMILY SEAL, MCON-1.2 CB	ELASTOSIL	NATURE	4
					1	COVER FAMILY SEAL, MCON-1.2 CB	PBT-GF20	BLACK	3
					1	18POS. MIXED REC HSG, LOWER PART	PBT-GF30	BLACK	2
					1	18POS. MIXED REC HSG, UPPER PART	PBT-GF20	BLACK	1
A	F	2-2112780-6	12 14 16	P	1	LEVER	PBT-GF20	BLACK	6
					1	RADIAL SEAL	ELASTOSIL	NATURE	5
					1	FAMILY SEAL, MCON-1.2 CB	ELASTOSIL	NATURE	4
					1	COVER FAMILY SEAL, MCON-1.2 CB	PBT-GF20	BLACK	3
					1	18POS. MIXED REC HSG, LOWER PART	PBT-GF30	BLACK	2
					1	18POS. MIXED REC HSG, UPPER PART	PBT-GF20	BLACK	1
A	F	2-2112780-5	2 6 11 16	O	1	LEVER	PBT-GF20	BLACK	6
					1	RADIAL SEAL	ELASTOSIL	NATURE	5
					1	FAMILY SEAL, MCON-1.2 CB	ELASTOSIL	NATURE	4
					1	COVER FAMILY SEAL, MCON-1.2 CB	PBT-GF20	BLACK	3
					1	18POS. MIXED REC HSG, LOWER PART	PBT-GF30	BLACK	2
					1	18POS. MIXED REC HSG, UPPER PART	PBT-GF20	BLACK	1
A	F	2-2112780-4	2 3 11 12 16	L	1	LEVER	PBT-GF20	BLACK	6
					1	RADIAL SEAL	ELASTOSIL	NATURE	5
					1	FAMILY SEAL, MCON-1.2 CB	ELASTOSIL	NATURE	4
					1	COVER FAMILY SEAL, MCON-1.2 CB	PBT-GF20	BLACK	3
					1	18POS. MIXED REC HSG, LOWER PART	PBT-GF30	BLACK	2
					1	18POS. MIXED REC HSG, UPPER PART	PBT-GF20	BLACK	1
A	F	2-2112780-3	2 5 6 15 17	K	1	LEVER	PBT-GF20	BLACK	6
					1	RADIAL SEAL	ELASTOSIL	NATURE	5
					1	FAMILY SEAL, MCON-1.2 CB	ELASTOSIL	NATURE	4
					1	COVER FAMILY SEAL, MCON-1.2 CB	PBT-GF20	BLACK	3
					1	18POS. MIXED REC HSG, LOWER PART	PBT-GF30	BLACK	2
					1	18POS. MIXED REC HSG, UPPER PART	PBT-GF20	BLACK	1
A	F	2-2112780-2	5 6 7 15 17	I	1	LEVER	PBT-GF20	BLACK	6
					1	RADIAL SEAL	ELASTOSIL	NATURE	5
					1	FAMILY SEAL, MCON-1.2 CB	ELASTOSIL	NATURE	4
					1	COVER FAMILY SEAL, MCON-1.2 CB	PBT-GF20	BLACK	3
					1	18POS. MIXED REC HSG, LOWER PART	PBT-GF30	BLACK	2
					1	18POS. MIXED REC HSG, UPPER PART	PBT-GF20	BLACK	1
A	F	2-2112780-1	2 11 15	H	1	LEVER	PBT-GF20	BLACK	6
					1	RADIAL SEAL	ELASTOSIL	NATURE	5
					1	FAMILY SEAL, MCON-1.2 CB	ELASTOSIL	NATURE	4
					1	COVER FAMILY SEAL, MCON-1.2 CB	PBT-GF20	BLACK	3
					1	18POS. MIXED REC HSG, LOWER PART	PBT-GF30	BLACK	2
					1	18POS. MIXED REC HSG, UPPER PART	PBT-GF20	BLACK	1
A	F	1-2112780-8	2 6 11	G	1	LEVER	PBT-GF20	BLACK	6
					1	RADIAL SEAL	ELASTOSIL	NATURE	5
					1	FAMILY SEAL, MCON-1.2 CB	ELASTOSIL	NATURE	4
					1	COVER FAMILY SEAL, MCON-1.2 CB	PBT-GF20	BLACK	3
					1	18POS. MIXED REC HSG, LOWER PART	PBT-GF30	BLACK	2
					1	18POS. MIXED REC HSG, UPPER PART	PBT-GF20	BLACK	1
A	F	1-2112780-7	2 6 7 11 15 16	F	1	LEVER	PBT-GF20	BLACK	6
					1	RADIAL SEAL	ELASTOSIL	NATURE	5
					1	FAMILY SEAL, MCON-1.2 CB	ELASTOSIL	NATURE	4
					1	COVER FAMILY SEAL, MCON-1.2 CB	PBT-GF20	BLACK	3
					1	18POS. MIXED REC HSG, LOWER PART	PBT-GF30	BLACK	2
					1	18POS. MIXED REC HSG, UPPER PART	PBT-GF20	BLACK	1
A	F	1-2112780-6	5 6 7 16	E	1	LEVER	PBT-GF20	BLACK	6
					1	RADIAL SEAL	ELASTOSIL	NATURE	5
					1	FAMILY SEAL, MCON-1.2 CB	ELASTOSIL	NATURE	4
					1	COVER FAMILY SEAL, MCON-1.2 CB	PBT-GF20	BLACK	3
					1	18POS. MIXED REC HSG, LOWER PART	PBT-GF30	BLACK	2
					1	18POS. MIXED REC HSG, UPPER PART	PBT-GF20	BLACK	1
A	F	1-2112780-9	-	Z	1	LEVER	PBT-GF20	BLACK	6
					1	RADIAL SEAL	ELASTOSIL	NATURE	5
					1	FAMILY SEAL, MCON-1.2 CB	ELASTOSIL	NATURE	4
					1	COVER FAMILY SEAL, MCON-1.2 CB	PBT-GF20	BLACK	3
					1	18POS. MIXED REC HSG, LOWER PART	PBT-GF30	BLACK	2
					1	18POS. MIXED REC HSG, UPPER PART	PBT-GF20	BLACK	1
A	F	1-2112780-5	5 6 7 8 15 16 17	D	1	LEVER	PBT-GF20	BLACK	6
					1	RADIAL SEAL	ELASTOSIL	NATURE	5
					1	FAMILY SEAL, MCON-1.2 CB	ELASTOSIL	NATURE	4
					1	COVER FAMILY SEAL, MCON-1.2 CB	PBT-GF20	BLACK	3
					1	18POS. MIXED REC HSG, LOWER PART	PBT-GF30	BLACK	2
					1	18POS. MIXED REC HSG, UPPER PART	PBT-GF20	BLACK	1
A	F	1-2112780-4	2 8 11 15 16	C	1	LEVER	PBT-GF20	BLACK	6
					1	RADIAL SEAL	ELASTOSIL	NATURE	5
					1	FAMILY SEAL, MCON-1.2 CB	ELASTOSIL	NATURE	4
					1	COVER FAMILY SEAL, MCON-1.2 CB	PBT-GF20	BLACK	3
					1	18POS. MIXED REC HSG, LOWER PART	PBT-GF30	BLACK	2
					1	18POS. MIXED REC HSG, UPPER PART	PBT-GF20	BLACK	1
A	F	1-2112780-3	7 15 17	B	1	LEVER	PBT-GF20	BLACK	6
					1	RADIAL SEAL	ELASTOSIL	NATURE	5
					1	FAMILY SEAL, MCON-1.2 CB	ELASTOSIL	NATURE	4
					1	COVER FAMILY SEAL, MCON-1.2 CB	PBT-GF20	BLACK	3
					1	18POS. MIXED REC HSG, LOWER PART	PBT-GF30	BLACK	2
					1	18POS. MIXED REC HSG, UPPER PART	PBT-GF20	BLACK	1
A	F	1-2112780-2	2 6 8 11 15 16	A	1	LEVER	PBT-GF20	BLACK	6
					1	RADIAL SEAL	ELASTOSIL	NATURE	5
					1	FAMILY SEAL, MCON-1.2 CB	ELASTOSIL	NATURE	4
					1	COVER FAMILY SEAL, MCON-1.2 CB	PBT-GF20	BLACK	3
					1	18POS. MIXED REC HSG, LOWER PART	PBT-GF30	BLACK	2
					1	18POS. MIXED REC HSG, UPPER PART	PBT-GF20	BLACK	1

THIS DRAWING IS A CONTROLLED DOCUMENT.

DIMENSIONS: mm

TOLERANCES UNLESS OTHERWISE SPECIFIED (ZUSAMMENGEMAESS NORM NAHE NO. CAD/MC/MUTTA)

0 PLC	±	
1 PLC	±	
2 PLC	±	
3 PLC	±	
4 PLC	±	
ANGLES		45°

MATERIAL –
FINISH –

DWN	P.Nickelfeld	15MAR2010
CHK	J.Ryll	09APR2010
APVD	D.Duenkel	09APR2010

PRODUCT SPEC 108-94094
APPLICATION SPEC 114-18853
WEIGHT –

CUSTOMER DRAWING

TE Connectivity

NAME 18POS. MIXED REC HSG, ASSY
18polig Buchsengehaeuse Assy

SIZE	CASE CODE	DRAWING NO	RESTRICTED TO
A0	00779	C-2112780	

SCALE 1:1 SHEET 2 OF 2 REV F2

4806 (3/11)

Общество с ограниченной ответственностью «МосЧип» ИНН 7719860671 / КПП 771901001
Адрес: 105318, г.Москва, ул.Щербаковская д.3, офис 1107

Данный компонент на территории Российской Федерации

Вы можете приобрести в компании MosChip.

Для оперативного оформления запроса Вам необходимо перейти по данной ссылке:

http://moschip.ru/get-element

Вы можете разместить у нас заказ для любого Вашего проекта, будь то серийное производство или разработка единичного прибора.

В нашем ассортименте представлены ведущие мировые производители активных и пассивных электронных компонентов.

Нашей специализацией является поставка электронной компонентной базы двойного назначения, продукции таких производителей как XILINX, Intel (ex.ALTERA), Vicor, Microchip, Texas Instruments, Analog Devices, Mini-Circuits, Amphenol, Glenair.

Сотрудничество с глобальными дистрибьюторами электронных компонентов, предоставляет возможность заказывать и получать с международных складов практически любой перечень компонентов в оптимальные для Вас сроки.

На всех этапах разработки и производства наши партнеры могут получить квалифицированную поддержку опытных инженеров.

Система менеджмента качества компании отвечает требованиям в соответствии с ГОСТ Р ИСО 9001, ГОСТ РВ 0015-002 и ЭС РД 009

Офис по работе с юридическими лицами:

105318, г.Москва, ул.Щербаковская д.3, офис 1107, 1118, ДЦ «Щербаковский»

Телефон: +7 495 668-12-70 (многоканальный)

Факс: +7 495 668-12-70 (доб.304)

E-mail: info@moschip.ru

Skype отдела продаж:
moschip.ru
moschip.ru_4
moschip.ru_6
moschip.ru_9