| Product number | DESCRIPTION | NOTES |
|---|---|---|
| 10110818-XXXXLF | NON-HF | SEE SHT. 3 |
| 10110818-XXXXHFLF | HALOGEN FREE (HF) | SEE SHT. 4 |

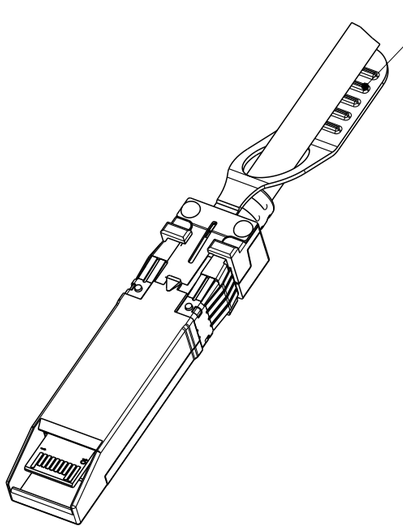


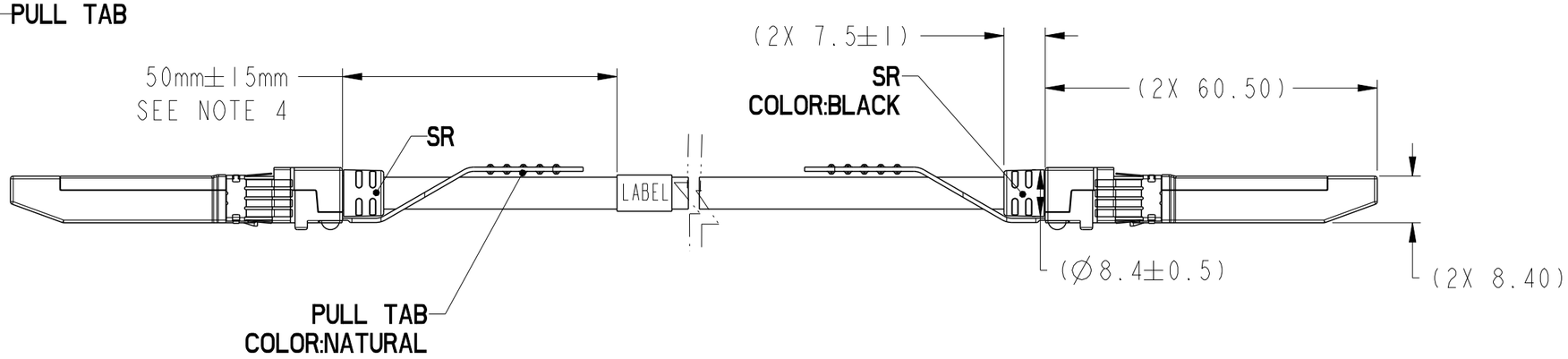


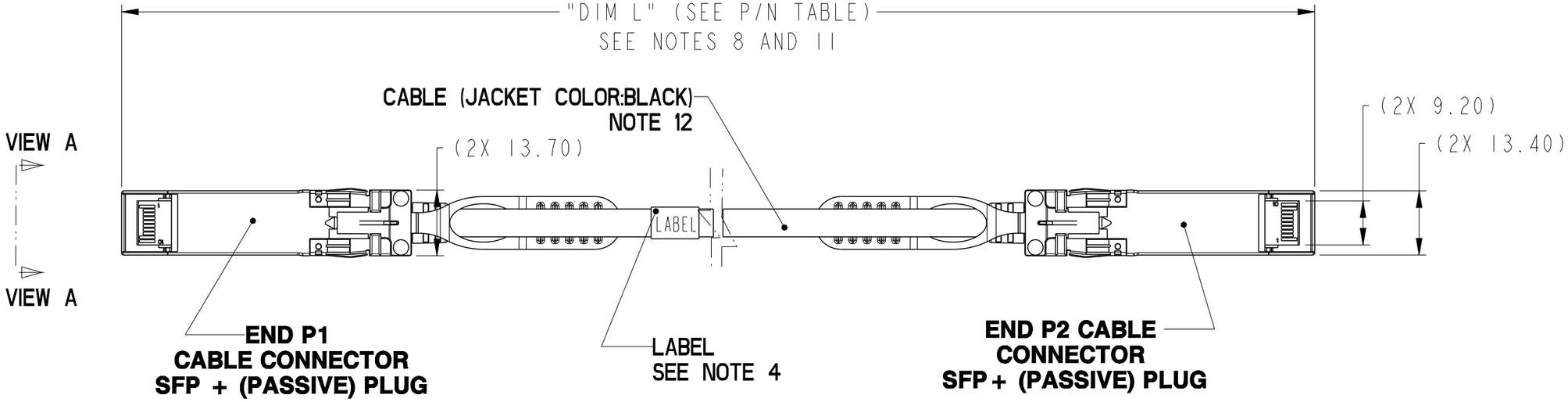


| | | | | | |
|---|---|---|---|---|---|
| dr | Deborah Ingram | 2009/12/18 | projection | mm | size A3 / scale 3:10 |
| eng | Michael Zhou | 2015/05/13 | | | ecn no ELX-N-20846-1 |
| chr | - | - | | | |
| appr | Frank Mao | 2015/05/13 | product family | SFP+ PLUG | rel level **Released** |

| | | | |
|---|---|---|---|
| FCI | title FINAL ASSEMBLY - STANDARD<br>SFP+ (PASSIVE) ASSEMBLY | dwg no 10110818 | rev G |
| www.fci.com | cat. no. - | Product - Customer Drw | sheet 1 of 5 |

Copyright FCI.

| Product number | DESCRIPTION | NOTES |
|---|---|---|
| 10110818-XXXXLF | NON-HF | SEE SHT. 3 |
| 10110818-XXXXHFLF | HALOGEN FREE (HF) | SEE SHT. 4 |

| WIRING LIST (SEE NOTE 5) | | | | |
|---|---|---|---|---|
| END P1 | | | END P2 | |
| POSITION | SYMBOL | | POSITION | SYMBOL |
| 12 | RD- | | 19 | TD- |
| 13 | RD+ | | 18 | TD+ |
| 18 | TD+ | | 13 | RD+ |
| 19 | TD- | | 12 | RD- |

| LOW SPEED SIGNALS P1 & P2 | |
|---|---|
| END P1 | |
| POSITION | SYMBOL |
| 1 | VeeT |
| 2 | TX_Fault |
| 3 | Tx_Disable |
| 4 | MOD_DEF(2) |
| 5 | MOD_DEF(1) |
| 6 | MOD_DEF(0) |
| 7 | RateSelect |
| 8 | LOS |
| 9 | VeeR |
| 10 | VeeR |
| 11 | VeeR |
| 14 | VeeR |
| 15 | VccR |
| 16 | VccT |
| 17 | VeeT |
| 20 | VeeT |

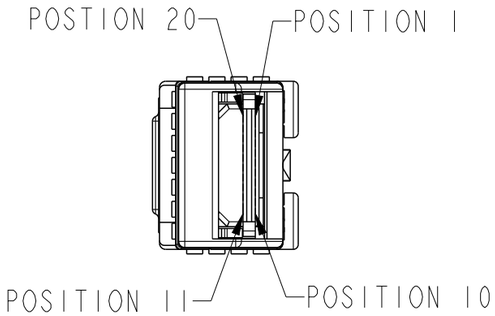


**VIEW A (P1)**
**SCALE 2:1**

| | | | | | |
|---|---|---|---|---|---|
| dr | Deborah Ingram | 2009/12/18 | projection | mm | size A3 / scale 3:10 |
| eng | Michael Zhou | 2015/05/13 | | | ecn no ELX-N-20846-1 |
| chr | - | - | | | |
| appr | Frank Mao | 2015/05/13 | product family | SFP+ PLUG | rel level Released |

| | | | |
|---|---|---|---|
| title | FINAL ASSEMBLY - STANDARD<br>SFP+ (PASSIVE) ASSEMBLY | dwg no 10110818 | rev G |
| www.fci.com | cat. no. - | Product - Customer Drw | sheet 2 of 5 |

Copyright FCI.

| PRODUCT NUMBER | LENGTH (Meters) "DIM L" | AWG | NOTES |
|---|---|---|---|
| 10110818-2005LF | 0.5 | 30 | NOTE 13 |
| 10110818-2010LF | 1.0 | 30 | |
| 10110818-2015LF | 1.5 | 30 | |
| 10110818-2020LF | 2.0 | 30 | |
| 10110818-2025LF | 2.5 | 30 | |
| 10110818-2030LF | 3.0 | 30 | |
| 10110818-2035LF | 3.5 | 30 | |
| 10110818-2040LF | 4.0 | 30 | |
| 10110818-3005LF | 0.5 | 28 | NOTE 13 |
| 10110818-3006LF | 0.6 | 28 | |
| 10110818-3010LF | 1.0 | 28 | |
| 10110818-3015LF | 1.5 | 28 | |
| 10110818-3020LF | 2.0 | 28 | |
| 10110818-3025LF | 2.5 | 28 | |
| 10110818-3030LF | 3.0 | 28 | |
| 10110818-3035LF | 3.5 | 28 | |
| 10110818-3040LF | 4.0 | 28 | |
| 10110818-3045LF | 4.5 | 28 | |
| 10110818-3050LF | 5.0 | 28 | |
| 10110818-4005LF | 0.5 | 26 | NOTE 13 |
| 10110818-4010LF | 1.0 | 26 | NOTE 13 |
| 10110818-4015LF | 1.5 | 26 | NOTE 13 |
| 10110818-4020LF | 2.0 | 26 | NOTE 13 |
| 10110818-4025LF | 2.5 | 26 | NOTE 13 |
| 10110818-4030LF | 3.0 | 26 | NOTE 13 |
| 10110818-4035LF | 3.5 | 26 | NOTE 13 |
| 10110818-4040LF | 4.0 | 26 | NOTE 13 |
| 10110818-4045LF | 4.5 | 26 | NOTE 13 |
| 10110818-4050LF | 5.0 | 26 | NOTE 13 |
| 10110818-4055LF | 5.5 | 26 | NOTE 13 |
| 10110818-4060LF | 6.0 | 26 | NOTE 13 |
| 10110818-4065LF | 6.5 | 26 | NOTE 10 & 13 |
| 10110818-4070LF | 7.0 | 26 | NOTE 10 & 13 |

| PRODUCT NUMBER | LENGTH (Meters) "DIM L" | AWG | NOTES |
|---|---|---|---|
| 10110818-5005LF | 0.5 | 24 | NOTE 13 |
| 10110818-5010LF | 1.0 | 24 | NOTE 13 |
| 10110818-5015LF | 1.5 | 24 | NOTE 13 |
| 10110818-5020LF | 2.0 | 24 | NOTE 13 |
| 10110818-5025LF | 2.5 | 24 | NOTE 13 |
| 10110818-5030LF | 3.0 | 24 | NOTE 13 |
| 10110818-5035LF | 3.5 | 24 | NOTE 13 |
| 10110818-5040LF | 4.0 | 24 | NOTE 13 |
| 10110818-5045LF | 4.5 | 24 | NOTE 13 |
| 10110818-5050LF | 5.0 | 24 | NOTE 13 |
| 10110818-5055LF | 5.5 | 24 | NOTE 13 |
| 10110818-5060LF | 6.0 | 24 | NOTE 13 |
| 10110818-5065LF | 6.5 | 24 | NOTE 13 |
| 10110818-5070LF | 7.0 | 24 | NOTE 13 |
| 10110818-5075LF | 7.5 | 24 | NOTE 13 |
| 10110818-5080LF | 8.0 | 24 | NOTE 10 & 13 |
| 10110818-5085LF | 8.5 | 24 | NOTE 10 & 13 |
| 10110818-5090LF | 9.0 | 24 | NOTE 10 & 13 |
| 10110818-5095LF | 9.5 | 24 | NOTE 10 & 13 |
| 10110818-5100LF | 10.0 | 24 | NOTE 10 & 13 |

# NON-HALOGEN FREE CABLE ASSEMBLY PART NUMBERS

Copyright FCI.

| | | | | | |
|---|---|---|---|---|---|
| dr | Deborah Ingram | 2009/12/18 | projection | mm | size A3 / scale 1:1 |
| eng | Michael Zhou | 2015/05/13 | | | ecn no ELX-N-20846-1 |
| chr | - | - | | | |
| appr | Frank Mao | 2015/05/13 | product family | SFP+ PLUG | rel level Released |

title: FINAL ASSEMBLY - STANDARD
SFP+ (PASSIVE) ASSEMBLY

dwg no: 10110818 rev: G

www.fci.com | cat. no. - | Product - Customer Drw | sheet 3 of 5

| PRODUCT NUMBER | LENGTH (Meters) "DIM L" | AWG | NOTES |
|---|---|---|---|
| 10110818-2005HFLF | 0.5 | 30 | NOTE 12 |
| 10110818-2010HFLF | 1.0 | 30 | NOTE 12 |
| 10110818-2015HFLF | 1.5 | 30 | NOTE 12 |
| 10110818-2020HFLF | 2.0 | 30 | NOTE 12 |
| 10110818-2025HFLF | 2.5 | 30 | NOTE 12 |
| 10110818-2030HFLF | 3.0 | 30 | NOTE 12 |
| 10110818-2035HFLF | 3.5 | 30 | NOTE 12 |
| 10110818-2040HFLF | 4.0 | 30 | NOTE 12 |
| 10110818-3005HFLF | 0.5 | 28 | NOTE 12 |
| 10110818-3006HFLF | 0.6 | 28 | NOTE 12 |
| 10110818-3010HFLF | 1.0 | 28 | NOTE 12 |
| 10110818-3015HFLF | 1.5 | 28 | NOTE 12 |
| 10110818-3020HFLF | 2.0 | 28 | NOTE 12 |
| 10110818-3025HFLF | 2.5 | 28 | NOTE 12 |
| 10110818-3030HFLF | 3.0 | 28 | NOTE 12 |
| 10110818-3035HFLF | 3.5 | 28 | NOTE 12 |
| 10110818-3040HFLF | 4.0 | 28 | NOTE 12 |
| 10110818-3045HFLF | 4.5 | 28 | NOTE 12 |
| 10110818-3050HFLF | 5.0 | 28 | NOTE 12 |
| 10110818-4005HFLF | 0.5 | 26 | NOTE 12 |
| 10110818-4010HFLF | 1.0 | 26 | NOTE 12 |
| 10110818-4015HFLF | 1.5 | 26 | NOTE 12 |
| 10110818-4020HFLF | 2.0 | 26 | NOTE 12 |
| 10110818-4025HFLF | 2.5 | 26 | NOTE 12 |
| 10110818-4030HFLF | 3.0 | 26 | NOTE 12 |
| 10110818-4035HFLF | 3.5 | 26 | NOTE 12 |
| 10110818-4040HFLF | 4.0 | 26 | NOTE 12 |
| 10110818-4045HFLF | 4.5 | 26 | NOTE 12 |
| 10110818-4050HFLF | 5.0 | 26 | NOTE 12 |
| 10110818-4055HFLF | 5.5 | 26 | NOTE 12 |
| 10110818-4060HFLF | 6.0 | 26 | NOTE 12 |
| 10110818-4065HFLF | 6.5 | 26 | NOTE 10 & 12 |
| 10110818-4070HFLF | 7.0 | 26 | NOTE 10 & 12 |

| PRODUCT NUMBER | LENGTH (Meters) "DIM L" | AWG | NOTES |
|---|---|---|---|
| 10110818-5005HFLF | 0.5 | 24 | NOTE 12 |
| 10110818-5010HFLF | 1.0 | 24 | NOTE 12 |
| 10110818-5015HFLF | 1.5 | 24 | NOTE 12 |
| 10110818-5020HFLF | 2.0 | 24 | NOTE 12 |
| 10110818-5025HFLF | 2.5 | 24 | NOTE 12 |
| 10110818-5030HFLF | 3.0 | 24 | NOTE 12 |
| 10110818-5035HFLF | 3.5 | 24 | NOTE 12 |
| 10110818-5040HFLF | 4.0 | 24 | NOTE 12 |
| 10110818-5045HFLF | 4.5 | 24 | NOTE 12 |
| 10110818-5050HFLF | 5.0 | 24 | NOTE 12 |
| 10110818-5055HFLF | 5.5 | 24 | NOTE 12 |
| 10110818-5060HFLF | 6.0 | 24 | NOTE 12 |
| 10110818-5065HFLF | 6.5 | 24 | NOTE 12 |
| 10110818-5070HFLF | 7.0 | 24 | NOTE 12 |
| 10110818-5075HFLF | 7.5 | 24 | NOTE 12 |
| 10110818-5080HFLF | 8.0 | 24 | NOTE 10 & 12 |
| 10110818-5085HFLF | 8.5 | 24 | NOTE 10 & 12 |
| 10110818-5090HFLF | 9.0 | 24 | NOTE 10 & 12 |
| 10110818-5095HFLF | 9.5 | 24 | NOTE 10 & 12 |
| 10110818-5100HFLF | 10.0 | 24 | NOTE 10 & 12 |

# HALOGEN FREE CABLE ASSEMBLY PART NUMBERS

Copyright FCI.

| | | | | | |
|---|---|---|---|---|---|
| dr | Deborah Ingram | 2009/12/18 | projection | mm | size A3 / scale 3:10 |
| eng | Michael Zhou | 2015/05/13 | | | ecn no ELX-N-20846-1 |
| chr | - | - | | | |
| appr | Frank Mao | 2015/05/13 | product family | SFP+ PLUG | rel level Released |

title: FINAL ASSEMBLY - STANDARD
SFP+ (PASSIVE) ASSEMBLY

dwg no: 10110818 rev G

www.fci.com | cat. no. - | Product - Customer Drw | sheet 4 of 5

| Product number | DESCRIPTION | NOTES |
|---|---|---|
| 10110818-XXXXLF | NON-HF | SEE SHT. 3 |
| 10110818-XXXXHFLF | HALOGEN FREE (HF) | SEE SHT. 4 |

NOTES:

1 - MATERIAL:
BACKSHELLS: ZINC ALLOY/ COPPER UNDERPLATE/ NICKEL OVERPLATE
PULL TAB: THERMOPLASTIC POLYMER
RELEASE SPRING: STAINLESS STEEL
EMI GASKET: STAINLESS STEEL
SR: THERMOPLASTIC POLYAMIDES
SCREWS: STAINLESS STEEL
PADDLE CARD: PRINTED CIRCUIT SUBSTRATE

2 - THIS PRODUCT MEETS THE RESTRICTION OF HAZARDOUS SUBSTANCES IN ELECTRICAL AND ELECTRONIC EQUIPMENT (RoHS) DIRECTIVE (2011/65/EU)

3 - IMPEDANCE: 100 OHMS DIFFERENTIAL.

4 - UNLESS OTHERWISE SPECIFIED LABEL POSITION IS TO BE 50mm FROM REAR OF CONNECTOR.
LABEL DETAILS:
G
MANUFACTURER CODE OR NAME COUNTRY ORIGIN
FCI P/N
FCI CUSTOMER DRAWING REVISION
FCI SERIAL NUMBER
2D BAR CODE OF SERIAL NUMBER
FONT SHALL BE CLEARLY VISIBLE AND BLACK IN COLOR.

LABEL EXAMPLE →

FCI CHINA
10110818-2005LF
Rev. G
CN1324SA052L0001
||||||||||||||||

FCI SERIAL NUMBER IS ONLY USED FOR TRACKING PRODUCT,DETAIL IS AS BELOW :

CN1324SA052L0001

- CN PRESENT MADE IN CHINA
- YYWW(YEAR AND WEEK)
- PRESENT PRODUCT BASE NUMBER(USE "SA")
- SEQUENCE NUMBER(0001~9999)
- NON-HALOGEN FREE OR HALOGEN FREE(L IS NON-HALOGEN FREE TYPE OR H IS HALOGEN FREE TYPE)
- CABLE AWG(2 IS 30AWG,3 IS 28AWG,4 IS 26AWG,5 IS 24AWG)
- LENGTH(05 IS 0.5 METER,10 IS 1.0 METER,15 IS 1.5 METERS,ETC)

5 - ALL CABLE ASSEMBLIES SHALL BE 100% TESTED FOR CONTINUITY AS DEFINED IN WIRING LIST.

6 - CONFORMS TO FCI PRODUCT SPECIFICATION: GS-12-616.

7 - PACKAGING OF LEAD FREE PRODUCTS MEETS LABELING AND PACKAGING PER SPECIFICATION GS-14-920. PACKAGE CABLE ASSEMBLIES PER GS-14-1272. DUST CAPS ARE TO BE ASSEMBLED PRIOR TO PACKING.

8 - THIS DIMENSION IS A FINISHED PRODUCT LENGTH.

9 - A "△" SYMBOL WILL BE NEXT TO ANY DIMENSION, VIEW, OR NOTE WHICH HAS BEEN MODIFIED WITH THE CURRENT DRAWING REVISION. THE CURRENT REVISION WILL BE SHOWN IN THE SYMBOL.

10 - LONGER LENGTH APPLICATIONS REQUIRE HOST SYSTEM PREMPHASIS AND/OR EQUALIZATION.

11 - UNLESS OTHERWISE SPECIFIED ASSEMBLIED LENGTH TOLERANCE IS TO BE:
<= 1 METER = ±25.0mm
> 1 METER TO 10 METERS = ±2% OF "DIM L"

12 - "HF" PRODUCT NUMBERS DESIGNATE THE USE OF HALOGEN FREE RAW CABLE.

13 - HALOGEN FREE RAW CABLE CAN BE USED AS A SUBSTITUTE ON NON-HF PRODUCT NUMBERS.

14 - EEPROM INFORMATION REFERS TO THE SFF-8472.

15 - RAW CABLE IS OPTIONAL,WHICH HAD BEEN QUALIFIED BY FCI AND MEET THE LATEST FCI SPEC"GS-12-616

| | | | | | |
|---|---|---|---|---|---|
| dr | Deborah Ingram | 2009/12/18 | projection | mm | size A3 / scale 3:10 |
| eng | Michael Zhou | 2015/05/13 | | | |
| chr | - | - | | | ecn no ELX-N-20846-1 |
| appr | Frank Mao | 2015/05/13 | product family | SFP+ PLUG | rel level Released |
| title | FINAL ASSEMBLY - STANDARD<br>SFP+ (PASSIVE) ASSEMBLY | | dwg no | 10110818 | rev G |
| www.fci.com | cat. no. - | | Product - Customer Drw | | sheet 5 of 5 |

Copyright FCI.

Общество с ограниченной ответственностью «МосЧип» ИНН 7719860671 / КПП 771901001
Адрес: 105318, г.Москва, ул.Щербаковская д.3, офис 1107

**Данный компонент на территории Российской Федерации**

**Вы можете приобрести в компании MosChip.**

Для оперативного оформления запроса Вам необходимо перейти по данной ссылке:

http://moschip.ru/get-element

Вы можете разместить у нас заказ для любого Вашего проекта, будь то серийное производство или разработка единичного прибора.

В нашем ассортименте представлены ведущие мировые производители активных и пассивных электронных компонентов.

Нашей специализацией является поставка электронной компонентной базы двойного назначения, продукции таких производителей как XILINX, Intel (ex.ALTERA), Vicor, Microchip, Texas Instruments, Analog Devices, Mini-Circuits, Amphenol, Glenair.

Сотрудничество с глобальными дистрибьюторами электронных компонентов, предоставляет возможность заказывать и получать с международных складов практически любой перечень компонентов в оптимальные для Вас сроки.

На всех этапах разработки и производства наши партнеры могут получить квалифицированную поддержку опытных инженеров.

Система менеджмента качества компании отвечает требованиям в соответствии с ГОСТ Р ИСО 9001, ГОСТ РВ 0015-002 и ЭС РД 009

**Офис по работе с юридическими лицами:**

105318, г.Москва, ул.Щербаковская д.3, офис 1107, 1118, ДЦ «Щербаковский»

Телефон: +7 495 668-12-70 (многоканальный)

Факс: +7 495 668-12-70 (доб.304)

E-mail: info@moschip.ru

Skype отдела продаж:
moschip.ru
moschip.ru_4
moschip.ru_6
moschip.ru_9