Features

- Carrier Frequency f_{osc} 100 kHz to 150 kHz
- Typical Data Rate up to 5 Kbaud at 125 kHz
- Suitable for Manchester and Bi-phase Modulation
- Power Supply from the Car Battery or from 5V Regulated Voltage
- Optimized for Car Immobilizer Applications
- Tuning Capability
- Microcontroller-compatible Interface
- Low Power Consumption in Standby Mode
- Power-supply Output for Microcontroller

Applications

- Car Immobilizers
- Animal Identification
- Access Control
- Process Control

Read/Write Base Station

U2270B

1. Description

The U2270B is an IC for IDIC® read/write base stations in contactless identification and immobilizer systems.

The IC incorporates the energy-transfer circuit to supply the transponder. It consists of an on-chip power supply, an oscillator, and a coil driver optimized for automotive-specific distances. It also includes all signal-processing circuits which are necessary to transform the small input signal into a microcontroller-compatible signal.

4684E–RFID–02/08

Figure 1-1. System Block Diagram

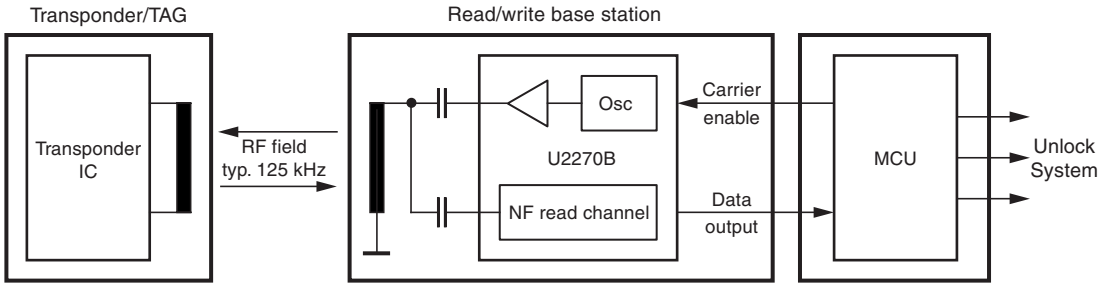

Figure 1-2. Block Diagram

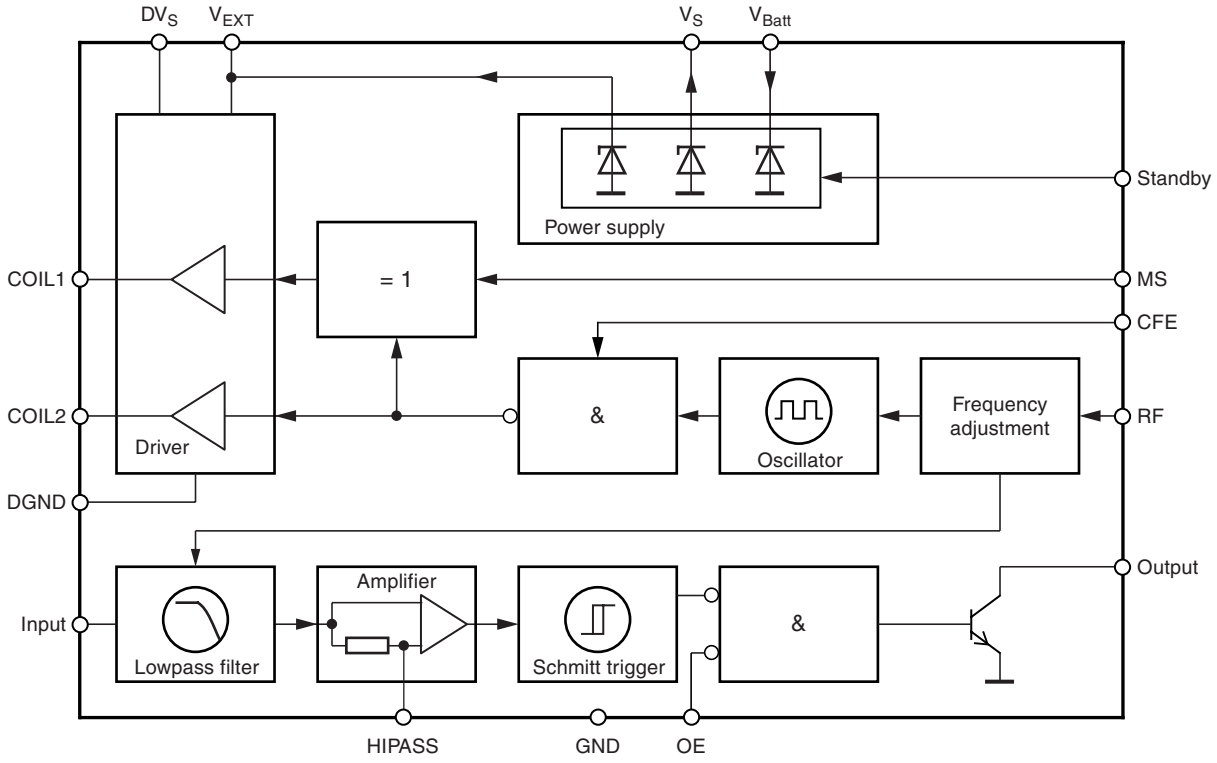

2. Pin Configuration

Figure 2-1. Pinning

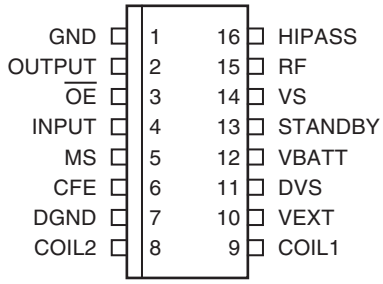

Table 2-1. Pin Description

Pin	Symbol	Function
1	GND	Ground
2	OUTPUT	Data output
3	OE	Data output enable
4	INPUT	Data input
5	MS	Mode select coil 1: common mode/differential mode
6	CFE	Carrier frequency enable
7	DGND	Driver ground
8	COIL2	Coil driver 2
9	COIL1	Coil driver 1
10	VEXT	External power supply
11	DVS	Driver supply voltage
12	VBatt	Battery voltage
13	STANDBY	Standby input
14	VS	Internal power supply (5V)
15	RF	Frequency adjustment
16	HIPASS	DC decoupling

3. Functional Description

3.1 Power Supply (PS)

Figure 3-1. Equivalent Circuit of Power Supply and Antenna Driver

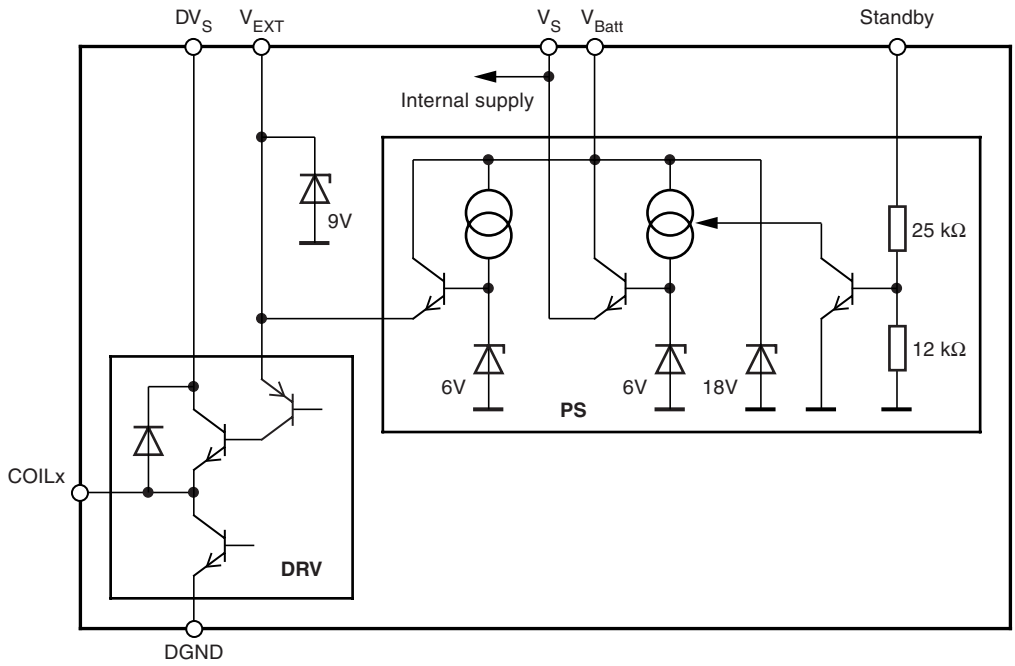

The U2270B can be operated with one external supply voltage or with two externally-stabilized supply voltages for an extended driver output voltage or from the 12V battery voltage of a vehicle. The 12V supply capability is achieved via the on-chip power supply (see Figure 3-1). The power supply provides two different output voltages, V_S and V_{EXT}.

V_S is the internal power supply voltage for everything except for the driver circuit. Pin VS is used to connect a block capacitor. V_S can be switched off by the STANDBY pin. In standby mode, the chip's power consumption is very low. V_{EXT} is the supply voltage of the antenna's pre-driver. This voltage can also be used to operate external circuits, such as a microcontroller. In conjunction with an external NPN transistor, it also establishes the supply voltage of the antenna coil driver, DVS.

3.2 Operation Modes to Power the U2270B

The following section explains the three different operation modes to power the U2270B.

3.2.1 One-rail Operation

All internal circuits are operated from one 5V power rail (see Figure 3-2). In this case, V_S, V_{EXT} and D_{VS} serve as inputs. V_{Batt} is not used but should also be connected to that supply rail.

Figure 3-2. One-rail Operation Supply

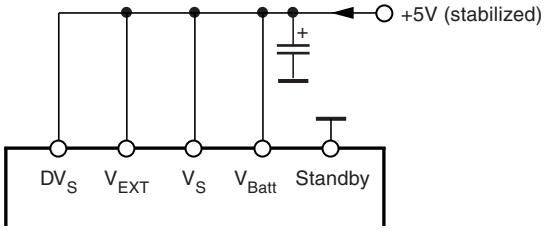

3.2.2 Two-rail Operation

In this application, the driver voltage, D_{VS}, and the pre-driver supply, V_{EXT}, are operated at a higher voltage than the rest of the circuitry to obtain a higher driver-output swing and thus a higher magnetic field (see Figure 3-3). V_S is connected to a 5V supply, whereas the driver voltages can be as high as 8V. This operation mode is intended to be used in situations where an extended communication distance is required.

Figure 3-3. Two-rail Operation Supply

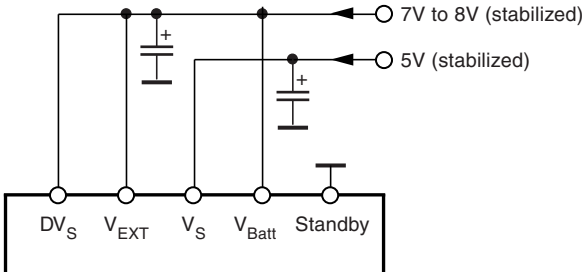

3.2.3 Battery-voltage Operation

Using this operation mode, V_S and V_{EXT} are generated by the internal power supply (see Figure 3-4 on page 6). For this mode, an external voltage regulator is not needed. The IC can be switched off via the STANDBY pin. V_{EXT} supplies the base of an external NPN transistor and external circuits, like a microcontroller (even in standby mode).

Pin V_{EXT} and V_{Batt} are overvoltage protected via internal Zener diodes (see Figure 3-1 on page 4).The maximum current into the pins is determined by the maximum power dissipation and the maximum junction temperature of the IC.

Figure 3-4. Battery Operation

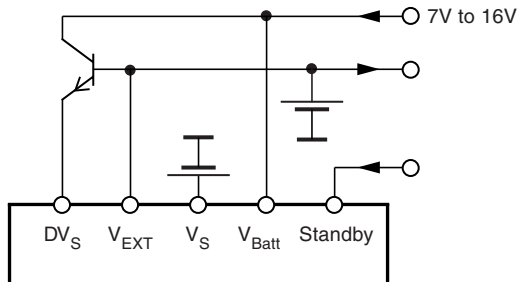

Table 3-1. Characteristics of the Various Operation Modes

Operation Mode	External Components Required	Supply-voltage Range	Driver Output Voltage Swing	Standby Mode Available
One-rail operation	1 voltage regulator 1 capacitor	5V ±10%	≈ 4V	No
Two-rail operation	2 voltage regulators 2 capacitors	5V ±10% 7V to 8V	6V to 7V	No
Battery-voltage operation	1 transistor 2 capacitors Optional, for load dump protection: 1 resistor 1 capacitor	6V to 16V	≈ 4V	Yes

3.3 Oscillator (Osc)

The frequency of the on-chip oscillator is controlled by a current fed into the R_F input. An integrated compensation circuit ensures a wide temperature range and a supply-voltage–independent frequency which is selected by a fixed resistor between R_F (pin 15) and V_S (pin 14). For 125 kHz, a resistor value of 110 kΩ is defined. For other frequencies, use the following formula:

$$R_t[k\Omega] = \frac{14375}{f_0[kHz]} - 5$$

This input can be used to adjust the frequency close to the resonance of the antenna. For more details see Section "Applications" on page 10.

Figure 3-5. Equivalent Circuit of Pin R_F

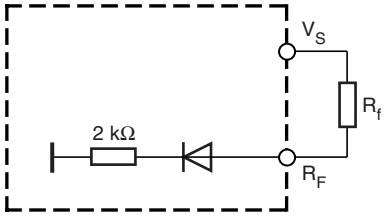

3.4 Low-pass Filter (LPF)

The fully integrated low-pass filter (4th-order Butterworth) removes the remaining carrier signal and high-frequency disturbances after demodulation. The upper cut-off frequency of the LPF depends on the selected oscillator frequency. The typical value is f_{Osc} / 18, and data rates up to f_{Osc} / 25 are possible if bi-phase or Manchester encoding is used.

A high-pass characteristic results from the capacitive coupling at the input pin 4 as shown in Figure 3-6. The input voltage swing is limited to 2 V_{pp}. For frequency response calculation, the impedances of the signal source and LPF input (typical 210 kΩ) have to be considered. The recommended values of the input capacitor for selected data rates are given in Section 4., "Applications" , on page 10.

Note: After switching on the carrier, the DC voltage of the coupling capacitor changes rapidly. When the antenna voltage is stable, the LPF needs approximately 2 ms to recover full sensitivity.

Figure 3-6. Equivalent Circuit of Pin Input

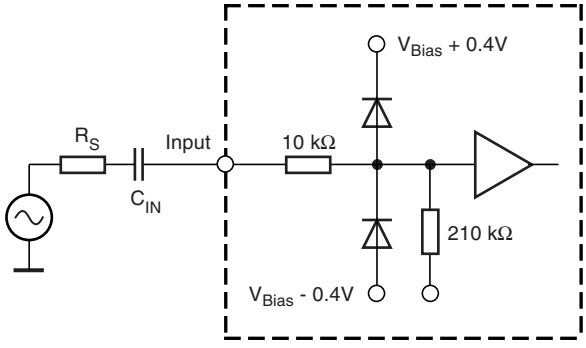

3.5 Amplifier (AMP)

The differential amplifier has a fixed gain, typically 30. The HIPASS pin is used for DC decoupling. The lower cut-off frequency of the decoupling circuit can be calculated as follows:

$$f_{cut} = \frac{1}{2 \times \pi \times C_{HP} \times R_i}$$

The value of the internal resistor R_i can be assumed to be 2.5 kΩ.

Recommended values of C_{HP} for selected data rates can be found in Section 4., "Applications" , on page 10.

Figure 3-7. Equivalent Circuit of Pin HIPASS

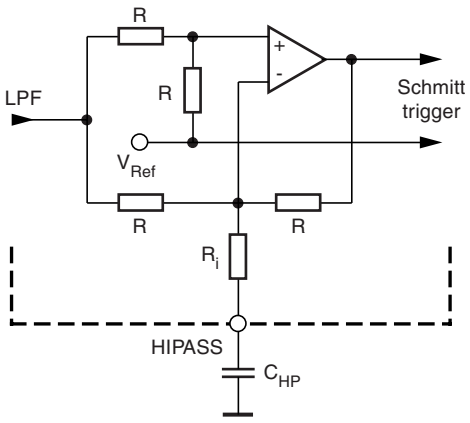

3.6 Schmitt Trigger

The signal is processed by a Schmitt trigger to suppress possible noise and to make the signal microcontroller-compatible. The hysteresis level is 100 mV symmetrically to the DC operation point. The open-collector output is enabled by a low level at OE (pin 3).

Figure 3-8. Equivalent Circuit of Pin OE

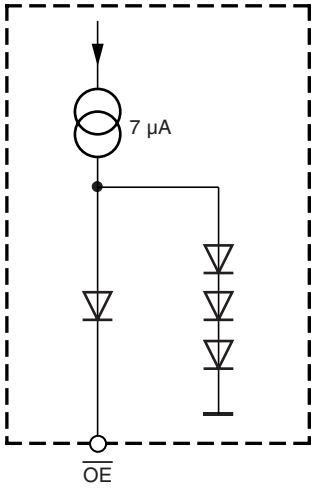

3.7 Driver (DRV)

The driver supplies the antenna coil with the appropriate energy. The circuit consists of two independent output stages. These output stages can be operated in two different modes. In common mode, the outputs of the stages are in phase; in this mode, the outputs can be interconnected to achieve a high-current output capability. Using the differential mode, the output voltages are in anti-phase; thus, the antenna coil is driven with a higher voltage. For a specific magnetic field, the antenna coil impedance is higher for the differential mode. As a higher coil impedance results in better system sensitivity, the differential mode should be preferred.

The CFE input is intended to be used for writing data into a read/write or a crypto transponder. This is achieved by interrupting the RF field with short gaps. The various functions are controlled by the inputs MS and CFE (see "Function Table" on page 10). The equivalent circuit of the driver is shown in Figure 3-1 on page 4.

Figure 3-9. Equivalent Circuit of Pin MS

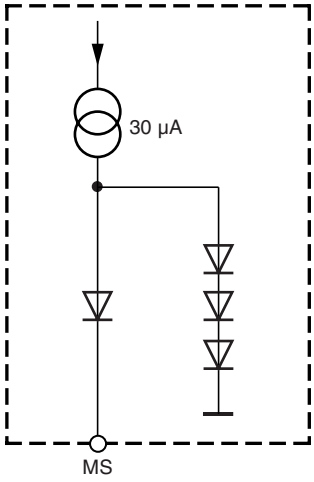

Figure 3-10. Equivalent Circuit of Pin CFE

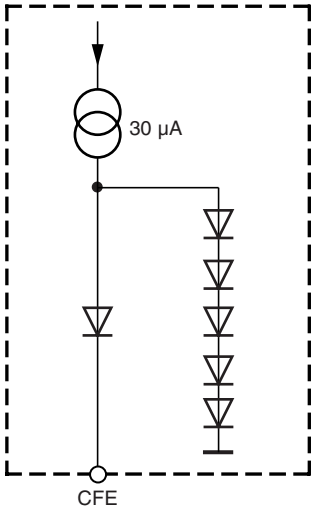

3.8 Function Table

CFE	MS	COIL1	COIL2
Low	Low	High	High
Low	High	Low	High
High	Low		
High	High		

OE	Output
Low	Enabled
High	Disabled

STANDBY	U2270B
Low	Standby mode
High	Active

4. Applications

To achieve the system performance, consider the power-supply environment and the magnetic-coupling situation.

The selection of the appropriate power-supply operation mode depends on the quality of supply voltage. If an unregulated supply voltage in the range of V = 7V to 16V is available, the internal power supply of the U2270B can be used. In this case, standby mode can be used and an external low-current microcontroller can be supplied.

If a 5V supply rail is available, it can be used to power the U2270B. In this case, check that the voltage is noise-free. An external power transistor is not necessary.

The application also depends on the magnetic-coupling situation. The coupling factor mainly depends on the transmission distance and the antenna coils. The following table lists the appropriate application for a given coupling factor. The magnetic coupling factor can be determined using Atmel®'s test transponder coil.

Table 4-1. Magnetic Coupling

Magnetic Coupling Factor	Appropriate Application
k > 3%	Free-running oscillator
k > 1%	Diode feedback
k > 0.5%	Diode feedback plus frequency altering
k > 0.3%	Diode feedback plus fine frequency tuning

The maximum transmission distance is also influenced by the accuracy of the antenna's resonance. Therefore, the recommendations given above are proposals only. A good compromise for the resonance accuracy of the antenna is a value in the range of f_{res} = 125 kHz ± 3%. Further details concerning the adequate application and the antenna design is provided in Section "Antenna Design Hints".

The application of the U2270B includes the two capacitors C_{IN} and C_{HP} whose values are linearly dependent on the transponder's data rate. The following table gives the appropriate values for the most common data rates. The values are valid for Manchester and bi-phase code.

Table 4-2. Recommended Capacitor Values

Data Rate f = 125 kHz	Input Capacitor (C_{IN})	Decoupling Capacitor (C_{HP})
f / 32 = 3.9 Kbits/s	680 pF	100 nF
f / 64 = 1.95 Kbits/s	1.2 nF	220 nF

The following applications are typical examples. The values of C_{IN} and C_{HP} correspond to the transponder's data rate only. The arrangement to fit the magnetic-coupling situation is also independent of other design issues except for one constellation. This constellation, consisting of diode feedback plus fine frequency tuning together with the two-rail power supply, should be used if the transmission distance is d ≈ 10 cm.

4.1 Application 1

Application using few external components. This application is for intense magnetic coupling only.

Figure 4-1. Application Circuit 1

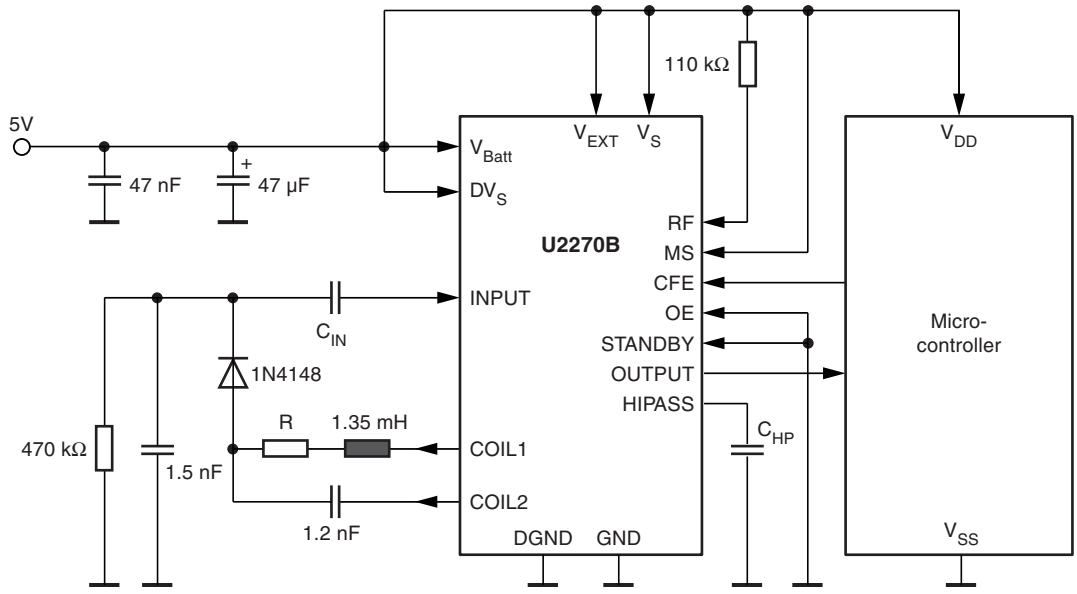

4.2 Application 2

Basic application using diode feedback. This application allows higher communication distances than .“Application 1”

Figure 4-2. Application Circuit 2

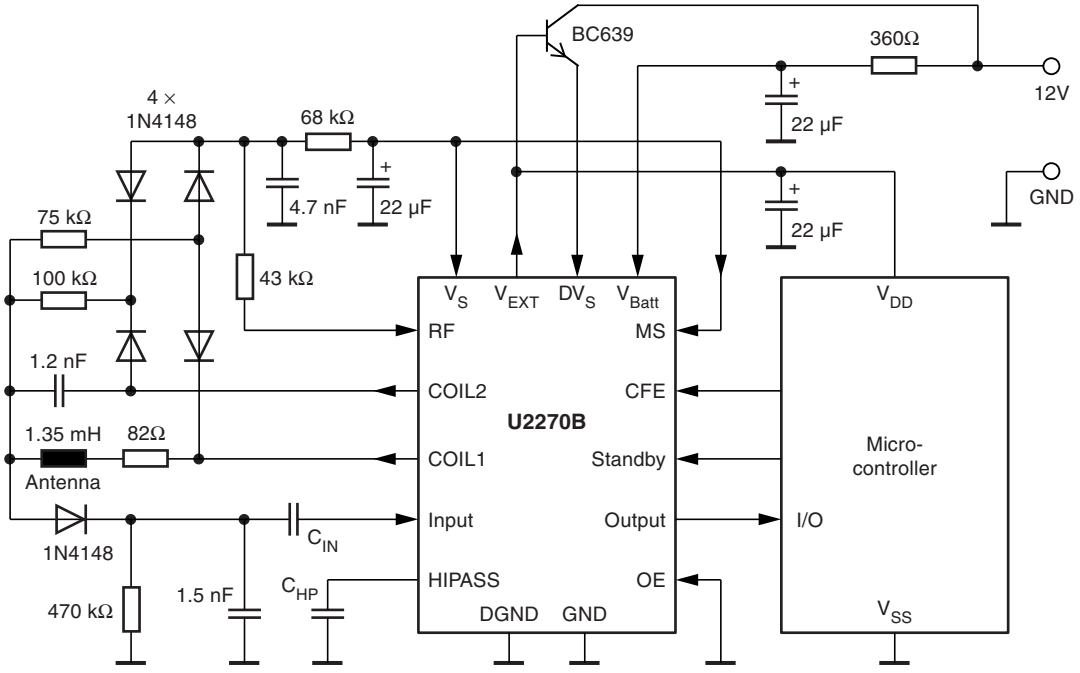

4.3 Application 3

This application is comparable to "Application 2" but alters the operating frequency. This allows higher antenna resonance tolerances and/or higher communication distances. This application is preferred if the detecting microcontroller is close to the U2270B, as an additional microcontroller signal controls the adequate operating frequency.

Figure 4-3. Application Circuit 3

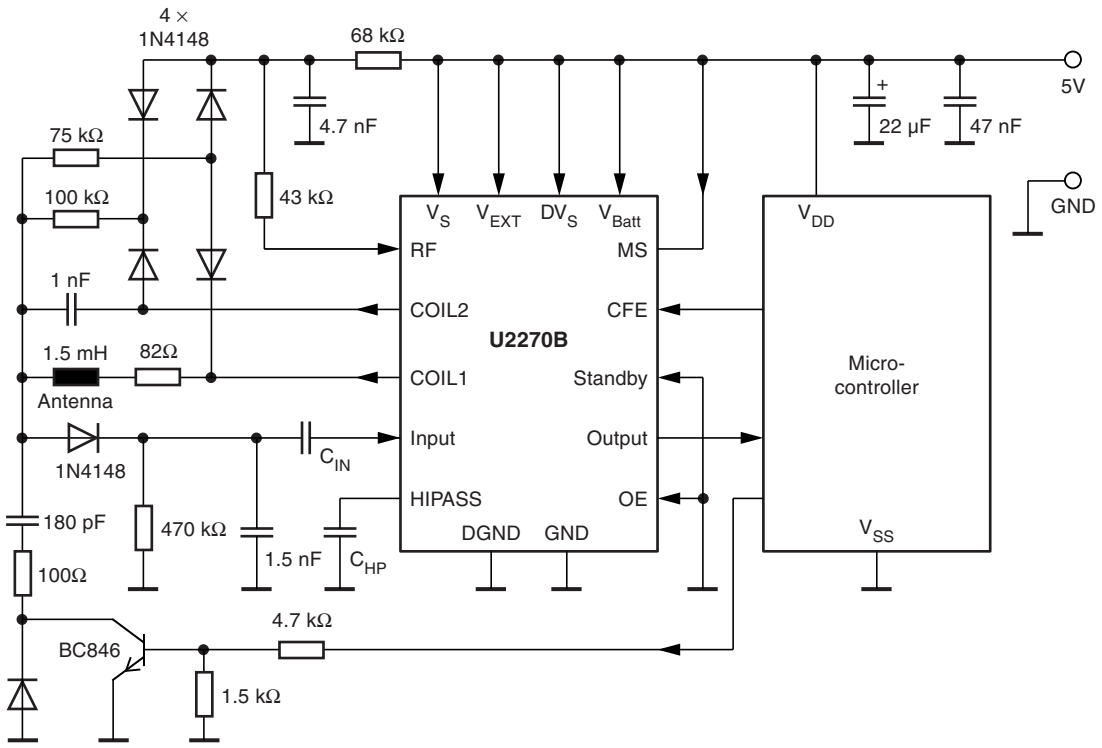

Note: Application examples have not been examined for series production or reliability, and no worst case scenarios have been developed. Customers who adapt any of these proposals must carry out their own testing and be convinced that no negative consequences arise from the proposals.

5. Absolute Maximum Ratings

Stresses beyond those listed under “Absolute Maximum Ratings” may cause permanent damage to the device. This is a stress rating only and functional operation of the device at these or any other conditions beyond those indicated in the operational sections of this specification is not implied. Exposure to absolute maximum rating conditions for extended periods may affect device reliability.

All voltages are referred to GND (Pins 1 and 7)

Parameter	Pin	Symbol	Min.	Max.	Unit
Operating voltage	12	V_{Batt}	V_S	16	V
Operating voltage	8, 9, 10, 11, 14	V_S, V_{EXT}, DV_S, Coil 1, Coil 2	–0.3	8	V
Range of input and output voltages	3, 4, 5, 6, 15, 16 2 and 13	V_{IN} V_{OUT}	–0.3 –0.3	V_S + 0.3 V_{Batt}	V
Output current	10	I_{EXT}		10	mA
Output current	2	I_{OUT}		10	mA
Driver output current	8 and 9	I_{Coil}		200	mA
Power dissipation SO16		P_{tot}		380	mW
Junction temperature		T_j		150	°C
Storage temperature		T_{stg}	–55	125	°C
Ambient temperature		T_{amb}	–40	105	°C

6. Thermal Resistance

Parameter	Symbol	Value	Unit
Thermal resistance SO16	R_{thJA}	120	K/W

7. Operating Range

All voltages are referred to GND (Pins 1 and 7)

Parameter	Pin	Symbol	Value	Unit
Operating voltage	12	V_{Batt}	7 to 16	V
Operating voltage	14	V_S	4.5 to 6.3	V
Operating voltage	10, 11	V_{EXT}, DV_S	4.5 to 8	V
Carrier frequency			100 to 150	kHz

8. Electrical Characteristics

All voltages are referred to GND (Pins 1 and 7)

Parameters	Test Conditions	Pin	Symbol	Min.	Typ.	Max.	Unit
Data output - Collector emitter - Saturation voltage	I_{out} = 5 mA	2	V_{CEsat}			400	mV
Data output enable - Low-level input voltage - High-level input voltage		3	V_{il} V_{ih}	 2.4		0.5	V V
Data input - Clamping level low - Clamping level high - Input resistance - Input sensitivity	f = 3 kHz (square wave) Gain capacitor = 100 nF	4	V_{il} V_{ih} R_{in} S_{IN}	 10	2 3.8 220		V V kΩ mV_{pp}
Driver polarity mode - Low-level input voltage - High-level input voltage		5	V_{il} V_{ih}	 2.4		 0.2	V V
Carrier frequency enable - Low-level input voltage - High-level input voltage		6	V_{il} V_{ih}	 3.0		 0.8	V V
Operating current	5V application without load connected to the coil driver	10, 11, 12 and 14	I_S		4.5	9	mA
Standby current	12V application	12	I_{St}		30	70	µA
V_S - Supply voltage - Supply voltage drift - Output current		14	V_S dV_s/dT I_S	4.6 1.8	5.4 4.2 3.5	6.3	V mV/K mA
Driver output voltage - One-rail operation - Battery-voltage operation	I_L = ±100 mA V_S, V_{EXT}, V_{Batt}, DV_S = 5V V_{Batt} = 12V	8, 9	V_{DRV} V_{DRV}	2.9 3.1	3.6 4.0	4.3 4.7	V_{PP} V_{PP}
V_{EXT} - Output voltage - Supply voltage drift - Output current - Standby output current	 IC active Standby mode	10	V_{EXT} dV_{EXT}/dT I_{EXT} I_{EXT}	4.6 3.5 0.4	5.4 4.2	6.3	V mV/K mA mA
Standby input - Low-level input voltage - High-level input voltage		13	V_{il} V_{ih}	 3.1		0.8	V V
Oscillator - Carrier frequency	RF resistor = 110 kΩ ("Application 2"), REM 1(1)		f_0	121	125	129	kHz
Low-pass filter - Cut-off frequency	Carrier frequency = 125 kHz		f_{cut}		7		kHz
Amplifier gain	C_{HP} = 100 nF				30		

Note: 1. REM 1: In "Application 1" where the oscillator operates in free-running mode, the IC must be soldered free from distortion. Otherwise, the oscillator may be out of bounds.

9. Ordering Information

Extended Type Number	Package	Remarks
U2270B-MFPY	SO16	Tube, Pb-free
U2270B-MFPG3Y	SO16	Taped and reeled, Pb-free

10. Package Information

Package: SO 16

Dimensions in mm

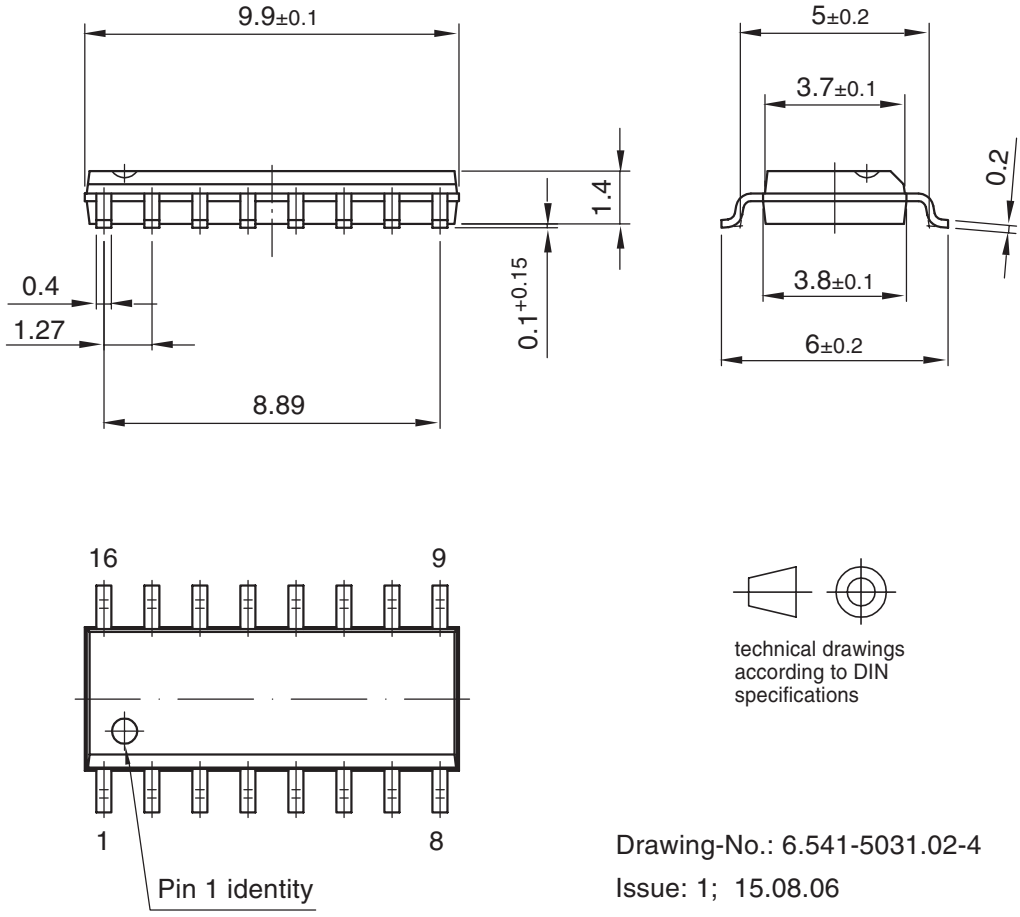

Drawing-No.: 6.541-5031.02-4

Issue: 1; 15.08.06

11. Revision History

Please note that the following page numbers referred to in this section refer to the specific revision mentioned, not to this document.

Revision No.	History
4684E-RFID-01/08	• Put datasheet in a new template • Section 3.4 “Low-pass Filter (LPF) on page 7: Typo removed • Section 8 “Electrical Characteristics” on page 15: Parameter V_S alignment corrected
4684D-RFID-09/06	• Put datasheet in a new template • Pb-free logo on page 1 deleted • Section 10 “Package Information” on page 16 changed • Minor grammatical corrections and fixed broken cross references
4684C-RFID-12/05	• Last page: Legal sentence changed
4684B-RFID-09/05	• Put datasheet in a new template • Pb-free Logo on page 1 added • New heading rows on Table “Absolute Maximum Ratings” on page 14 added • Ordering Information on page 16 changed

Headquarters

Atmel Corporation
2325 Orchard Parkway
San Jose, CA 95131
USA
Tel: 1(408) 441-0311
Fax: 1(408) 487-2600

International

Atmel Asia
Room 1219
Chinachem Golden Plaza
77 Mody Road Tsimshatsui
East Kowloon
Hong Kong
Tel: (852) 2721-9778
Fax: (852) 2722-1369

Atmel Europe
Le Krebs
8, Rue Jean-Pierre Timbaud
BP 309
78054
Saint-Quentin-en-Yvelines Cedex
France
Tel: (33) 1-30-60-70-00
Fax: (33) 1-30-60-71-11

Atmel Japan
9F, Tonetsu Shinkawa Bldg.
1-24-8 Shinkawa
Chuo-ku, Tokyo 104-0033
Japan
Tel: (81) 3-3523-3551
Fax: (81) 3-3523-7581

Product Contact

Web Site
www.atmel.com

Technical Support
rfid@atmel.com

Sales Contact
www.atmel.com/contacts

Literature Requests
www.atmel.com/literature

Disclaimer: The information in this document is provided in connection with Atmel products. No license, express or implied, by estoppel or otherwise, to any intellectual property right is granted by this document or in connection with the sale of Atmel products. **EXCEPT AS SET FORTH IN ATMEL'S TERMS AND CONDITIONS OF SALE LOCATED ON ATMEL'S WEB SITE, ATMEL ASSUMES NO LIABILITY WHATSOEVER AND DISCLAIMS ANY EXPRESS, IMPLIED OR STATUTORY WARRANTY RELATING TO ITS PRODUCTS INCLUDING, BUT NOT LIMITED TO, THE IMPLIED WARRANTY OF MERCHANTABILITY, FITNESS FOR A PARTICULAR PURPOSE, OR NON-INFRINGEMENT. IN NO EVENT SHALL ATMEL BE LIABLE FOR ANY DIRECT, INDIRECT, CONSEQUENTIAL, PUNITIVE, SPECIAL OR INCIDENTAL DAMAGES (INCLUDING, WITHOUT LIMITATION, DAMAGES FOR LOSS OF PROFITS, BUSINESS INTERRUPTION, OR LOSS OF INFORMATION) ARISING OUT OF THE USE OR INABILITY TO USE THIS DOCUMENT, EVEN IF ATMEL HAS BEEN ADVISED OF THE POSSIBILITY OF SUCH DAMAGES.** Atmel makes no representations or warranties with respect to the accuracy or completeness of the contents of this document and reserves the right to make changes to specifications and product descriptions at any time without notice. Atmel does not make any commitment to update the information contained herein. Unless specifically provided otherwise, Atmel products are not suitable for, and shall not be used in, automotive applications. Atmel's products are not intended, authorized, or warranted for use as components in applications intended to support or sustain life.

© 2008 Atmel Corporation. All rights reserved. Atmel®, logo and combinations thereof, IDIC®, and others are registered trademarks or trademarks of Atmel Corporation or its subsidiaries. Other terms and product names may be trademarks of others.

4684E–RFID–02/08

Общество с ограниченной ответственностью «МосЧип» ИНН 7719860671 / КПП 771901001
Адрес: 105318, г.Москва, ул.Щербаковская д.3, офис 1107

Данный компонент на территории Российской Федерации

Вы можете приобрести в компании MosChip.

Для оперативного оформления запроса Вам необходимо перейти по данной ссылке:

http://moschip.ru/get-element

Вы можете разместить у нас заказ для любого Вашего проекта, будь то серийное производство или разработка единичного прибора.

В нашем ассортименте представлены ведущие мировые производители активных и пассивных электронных компонентов.

Нашей специализацией является поставка электронной компонентной базы двойного назначения, продукции таких производителей как XILINX, Intel (ex.ALTERA), Vicor, Microchip, Texas Instruments, Analog Devices, Mini-Circuits, Amphenol, Glenair.

Сотрудничество с глобальными дистрибьюторами электронных компонентов, предоставляет возможность заказывать и получать с международных складов практически любой перечень компонентов в оптимальные для Вас сроки.

На всех этапах разработки и производства наши партнеры могут получить квалифицированную поддержку опытных инженеров.

Система менеджмента качества компании отвечает требованиям в соответствии с ГОСТ Р ИСО 9001, ГОСТ РВ 0015-002 и ЭС РД 009

Офис по работе с юридическими лицами:

105318, г.Москва, ул.Щербаковская д.3, офис 1107, 1118, ДЦ «Щербаковский»

Телефон: +7 495 668-12-70 (многоканальный)

Факс: +7 495 668-12-70 (доб.304)

E-mail: info@moschip.ru

Skype отдела продаж:
moschip.ru
moschip.ru_4
moschip.ru_6
moschip.ru_9