SERIES

PTHFxxxR-SM
PTKMxxxR-SM
PTHF-SM
PTKM-SM

RoHS Compliant

Traditional First Quality

Surface Mount Toroidal Power Chokes

Actual Size (Max.)
(PTHF 100-50SM)

- **Excellent electromagnetic shielding** performance for commercial and industrial applications
- **For higher saturation levels** use Series PTHF-SM
- Current rating from 0.92 to 7.36 amps
- Inductance values from 10 µH to 330 µH

Marking API; ether PTHF or PTKM; remainder of part number.

Example: PTKM50R-50SM
API
PTHF
50R-50SM

Notes 1) Rated current is based on a 35°C temperature rise at an ambient temperature of 90°C. 2) Incremental current is the approximate value that will cause a percentage drop in inductance as indicated in the table.

DASH NUMBER*	INDUCTANCE @ 1 kHz (µH) ±10%	CURRENT RATING ADC	Inc-I ADC ΔL 10%	Inc-I ADC ΔL 20%	DC RESISTANCE MAXIMUM (OHMS)	SRF MINIMUM (MHz)
SERIES PTHF-SM HIGH SATURATION CORE						
PTHF10-50SM	10	7.36	6.00	8.70	0.01	35.0
PTHF25-50SM	25	5.20	3.60	5.30	0.02	10.0
PTHF50-50SM	50	3.93	2.00	3.10	0.04	7.0
PTHF75-50SM	75	3.47	1.60	2.50	0.05	5.0
PTHF100-50SM	100	3.14	1.50	2.20	0.06	4.0
PTHF150-50SM	150	2.33	1.20	1.80	0.10	3.0
PTHF200-50SM	200	1.97	1.00	1.60	0.14	2.0
PTHF250-50SM	250	1.84	0.90	1.40	0.16	1.5
PTHF330-50SM	330	1.69	0.80	1.20	0.19	1.0
PTHF10-40SM	10	4.84	3.80	5.70	0.02	35.0
PTHF25-40SM	25	3.38	2.20	3.50	0.04	20.0
PTHF50-40SM	50	1.90	1.70	2.50	0.11	13.0
PTHF75-40SM	75	1.69	1.30	2.00	0.14	9.0
PTHF100-40SM	100	1.60	1.10	1.70	0.16	6.0
PTHF150-40SM	150	1.45	0.90	1.40	0.19	3.5
PTHF200-40SM	200	1.12	0.70	1.10	0.32	3.0
PTHF250-40SM	250	1.05	0.70	1.10	0.36	2.5
PTHF10-30SM	10	2.56	2.20	3.40	0.05	35.0
PTHF25-30SM	25	2.16	1.40	2.10	0.07	25.0
PTHF50-30SM	50	1.81	1.20	1.30	0.10	10.0
PTHF75-30SM	75	1.62	0.80	1.20	0.13	7.0
PTHF100-30SM	100	1.50	0.60	1.00	0.15	6.0
PTHF150-30SM	150	1.33	0.60	1.00	0.19	3.5
PTHF200-30SM	200	1.04	0.50	0.70	0.30	3.0
PTHF250-30SM	250	0.96	0.50	0.70	0.36	3.0
PTHF10-180SM	10	1.60	0.90	1.40	0.10	35.0
PTHF25-180SM	25	1.33	0.60	0.90	0.15	30.0
PTHF50-180SM	50	1.12	0.40	0.60	0.21	10.0
PTHF75-180SM	75	0.99	0.30	0.50	0.26	8.0
PTHF100-180SM	100	0.92	0.30	0.40	0.30	6.0
SERIES PTKM-SM FERROUS ALLOY CORE						
PTKM10-50SM	10	7.36	1.70	3.30	0.01	35.0
PTKM25-50SM	25	5.20	1.00	1.90	0.02	10.0
PTKM50-50SM	50	3.93	0.70	1.30	0.04	7.0
PTKM75-50SM	75	3.47	0.60	1.10	0.05	5.0
PTKM100-50SM	100	3.14	0.50	0.96	0.06	4.0
PTKM150-50SM	150	2.33	0.40	0.78	0.10	3.0
PTKM200-50SM	200	1.97	0.35	0.65	0.14	2.0
PTKM250-50SM	250	1.84	0.31	0.59	0.16	1.5
PTKM330-50SM	330	1.69	0.27	0.50	0.19	1.0
PTKM10-40SM	10	4.84	1.30	2.50	0.02	35.0
PTKM25-40SM	25	3.38	0.70	1.30	0.04	20.0
PTKM50-40SM	50	1.90	0.56	1.00	0.11	13.0
PTKM75-40SM	75	1.69	0.45	0.86	0.14	9.0
PTKM100-40SM	100	1.60	0.40	0.76	0.16	6.0
PTKM150-40SM	150	1.45	0.33	0.60	0.19	3.5
PTKM200-40SM	200	1.12	0.30	0.56	0.32	3.0
PTKM250-40SM	250	1.05	0.25	0.48	0.36	2.5
PTKM10-30SM	10	2.56	0.80	1.60	0.05	35.0
PTKM25-30SM	25	2.16	0.50	0.96	0.07	25.0
PTKM50-30SM	50	1.81	0.35	0.68	0.10	10.0
PTKM75-30SM	75	1.62	0.28	0.54	0.13	7.0
PTKM100-30SM	100	1.50	0.23	0.50	0.15	6.0
PTKM150-30SM	150	1.33	0.20	0.40	0.19	3.5
PTKM200-30SM	200	1.04	0.17	0.34	0.30	3.0
PTKM250-30SM	250	0.96	0.15	0.30	0.36	3.0
PTKM10-180SM	10	1.60	0.43	0.86	0.10	35.0
PTKM25-180SM	25	1.33	0.25	0.50	0.15	30.0
PTKM50-180SM	50	1.12	0.18	0.35	0.21	10.0
PTKM75-180SM	75	0.99	0.15	0.28	0.26	8.0
PTKM100-180SM	100	0.92	0.13	0.25	0.30	6.0

*Complete part # must include series # PLUS the dash #

For surface finish information, refer to www.delevanfinishes.com

270 Quaker Rd., East Aurora NY 14052 • Phone 716-652-3600 • Fax 716-652-4814 • E-mail: apisales@delevan.com • www.delevan.com

API Delevan®

SERIES PTHFxxxR-SM & PTKMxxxR-SM PTHF-SM & PTKM-SM

RoHS Compliant

Traditional First Quality

Surface Mount Toroidal Power Chokes

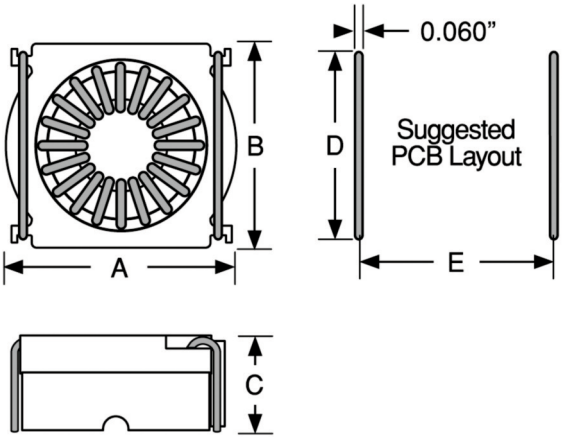

PHYSICAL PARAMETERS

PART NUMBER*	A Max.		B Max.		C Max.		D Nom.		E Nom.	
	Inches	mm	Inches	mm	Inches	mm	Inches	mm	Inches	mm
PT**10-50SM	0.700	17.78	0.670	17.02	0.400	10.16	0.600	15.24	0.600	15.24
PT**25-50SM	0.700	17.78	0.670	17.02	0.400	10.16	0.600	15.24	0.600	15.24
PT**50-50SM	0.700	17.78	0.670	17.02	0.400	10.16	0.600	15.24	0.600	15.24
PT**75-50SM	0.700	17.78	0.670	17.02	0.400	10.16	0.600	15.24	0.600	15.24
PT**100-50SM	0.700	17.78	0.670	17.02	0.400	10.16	0.600	15.24	0.600	15.24
PT**150-50SM	0.700	17.78	0.670	17.02	0.400	10.16	0.600	15.24	0.600	15.24
PT**200-50SM	0.700	17.78	0.670	17.02	0.400	10.16	0.600	15.24	0.600	15.24
PT**250-50SM	0.700	17.78	0.670	17.02	0.400	10.16	0.600	15.24	0.600	15.24
PT**330-50SM	0.700	17.78	0.670	17.02	0.400	10.16	0.600	15.24	0.600	15.24
PT**10-40SM	0.570	14.48	0.560	14.22	0.400	10.16	0.500	12.70	0.500	12.70
PT**25-40SM	0.570	14.48	0.560	14.22	0.400	10.16	0.500	12.70	0.500	12.70
PT**50-40SM	0.570	14.48	0.560	14.22	0.400	10.16	0.500	12.70	0.500	12.70
PT**75-40SM	0.570	14.48	0.560	14.22	0.400	10.16	0.500	12.70	0.500	12.70
PT**100-40SM	0.570	14.48	0.560	14.22	0.400	10.16	0.500	12.70	0.500	12.70
PT**150-40SM	0.570	14.48	0.560	14.22	0.400	10.16	0.500	12.70	0.500	12.70
PT**200-40SM	0.570	14.48	0.560	14.22	0.400	10.16	0.500	12.70	0.500	12.70
PT**250-40SM	0.570	14.48	0.560	14.22	0.400	10.16	0.500	12.70	0.500	12.70
PT**10-30SM	0.440	11.18	0.440	11.18	0.400	10.16	0.400	10.16	0.400	10.16
PT**25-30SM	0.440	11.18	0.440	11.18	0.400	10.16	0.400	10.16	0.400	10.16
PT**50-30SM	0.440	11.18	0.440	11.18	0.400	10.16	0.400	10.16	0.400	10.16
PT**75-30SM	0.440	11.18	0.440	11.18	0.400	10.16	0.400	10.16	0.400	10.16
PT**100-30SM	0.440	11.18	0.440	11.18	0.400	10.16	0.400	10.16	0.400	10.16
PT**150-30SM	0.440	11.18	0.440	11.18	0.400	10.16	0.400	10.16	0.400	10.16
PT**200-30SM	0.440	11.18	0.440	11.18	0.400	10.16	0.400	10.16	0.400	10.16
PT**250-30SM	0.440	11.18	0.440	11.18	0.400	10.16	0.400	10.16	0.400	10.16
PT**10-180SM	0.340	8.636	0.340	8.64	0.300	7.62	0.300	7.62	0.300	7.62
PT**25-180SM	0.340	8.636	0.340	8.64	0.300	7.62	0.300	7.62	0.300	7.62
PT**50-180SM	0.340	8.636	0.340	8.64	0.300	7.62	0.300	7.62	0.300	7.62
PT**75-180SM	0.340	8.636	0.340	8.64	0.300	7.62	0.300	7.62	0.300	7.62
PT**100-180SM	0.340	8.636	0.340	8.64	0.300	7.62	0.300	7.62	0.300	7.62

**Insert HF or KM for complete Part Number

*Complete part # must include series # PLUS the dash #

For surface finish information, refer to www.delevanfinishes.com

270 Quaker Rd., East Aurora NY 14052 • Phone 716-652-3600 • Fax 716-652-4814 • E-mail: apisales@delevan.com • www.delevan.com

API Delevan®

Общество с ограниченной ответственностью «МосЧип» ИНН 7719860671 / КПП 771901001
Адрес: 105318, г.Москва, ул.Щербаковская д.3, офис 1107

Данный компонент на территории Российской Федерации

Вы можете приобрести в компании MosChip.

Для оперативного оформления запроса Вам необходимо перейти по данной ссылке:

http://moschip.ru/get-element

Вы можете разместить у нас заказ для любого Вашего проекта, будь то серийное производство или разработка единичного прибора.

В нашем ассортименте представлены ведущие мировые производители активных и пассивных электронных компонентов.

Нашей специализацией является поставка электронной компонентной базы двойного назначения, продукции таких производителей как XILINX, Intel (ex.ALTERA), Vicor, Microchip, Texas Instruments, Analog Devices, Mini-Circuits, Amphenol, Glenair.

Сотрудничество с глобальными дистрибьюторами электронных компонентов, предоставляет возможность заказывать и получать с международных складов практически любой перечень компонентов в оптимальные для Вас сроки.

На всех этапах разработки и производства наши партнеры могут получить квалифицированную поддержку опытных инженеров.

Система менеджмента качества компании отвечает требованиям в соответствии с ГОСТ Р ИСО 9001, ГОСТ РВ 0015-002 и ЭС РД 009

Офис по работе с юридическими лицами:

105318, г.Москва, ул.Щербаковская д.3, офис 1107, 1118, ДЦ «Щербаковский»

Телефон: +7 495 668-12-70 (многоканальный)

Факс: +7 495 668-12-70 (доб.304)

E-mail: info@moschip.ru

Skype отдела продаж:
moschip.ru
moschip.ru_4
moschip.ru_6
moschip.ru_9