CAT5112

32-tap Digital Potentiometer (POT) with Buffered Wiper

ON Semiconductor®

http://onsemi.com

SOIC−8
V SUFFIX
CASE 751BD

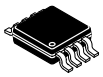

MSOP−8
Z SUFFIX
CASE 846AD

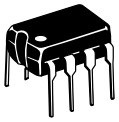

PDIP−8
L SUFFIX
CASE 646AA

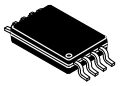

TSSOP−8
Y SUFFIX
CASE 948AL

Description

The CAT5112 is a single digital POT designed as an electronic replacement for mechanical potentiometers. Ideal for automated adjustments on high volume production lines, they are also well suited for applications where equipment requiring periodic adjustment is either difficult to access or located in a hazardous or remote environment.

The CAT5112 contains a 32-tap series resistor array connected between two terminals R_H and R_L. An up/down counter and decoder that are controlled by three input pins, determines which tap is connected to the wiper, R_{WB}. The CAT5112 wiper is buffered by an op amp that operates rail to rail. The wiper setting, stored in non-volatile memory, is not lost when the device is powered down and is automatically recalled when power is returned. The wiper can be adjusted to test new system values without effecting the stored setting. Wiper-control of the CAT5112 is accomplished with three input control pins, $\overline{CS}$, U/$\overline{D}$, and $\overline{INC}$. The $\overline{INC}$ input increments the wiper in the direction which is determined by the logic state of the U/$\overline{D}$ input. The $\overline{CS}$ input is used to select the device and also store the wiper position prior to power down.

The digital POT can be used as a buffered voltage divider. For applications where the potentiometer is used as a 2-terminal variable resistor, please refer to the CAT5114. The buffered wiper of the CAT5112 is not compatible with that application.

Features

- 32-position Linear Taper Potentiometer
- Non-volatile EEPROM Wiper Storage; Buffered Wiper
- Low Power CMOS Technology
- Single Supply Operation: 2.5 V – 6.0 V
- Increment Up/Down Serial Interface
- Resistance Values: 10 kΩ, 50 kΩ and 100 kΩ
- Available in PDIP, SOIC, TSSOP and MSOP Packages
- These Devices are Pb-Free, Halogen Free/BFR Free and are RoHS Compliant

Applications

- Automated Product Calibration
- Remote Control Adjustments
- Offset, Gain and Zero Control
- Tamper-proof Calibrations
- Contrast, Brightness and Volume Controls
- Motor Controls and Feedback Systems
- Programmable Analog Functions

PIN CONFIGURATIONS

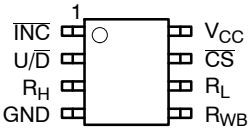

PDIP (L), SOIC (V), MSOP (Z)

TSSOP (Y)

(Top Views)

PIN FUNCTION

Pin Name	Function
$\overline{INC}$	Increment Control
U/$\overline{D}$	Up/Down Control
R_H	Potentiometer High Terminal
GND	Ground
R_{WB}	Buffered Wiper Terminal
R_L	Potentiometer Low Terminal
$\overline{CS}$	Chip Select
V_{CC}	Supply Voltage

ORDERING INFORMATION

See detailed ordering and shipping information in the package dimensions section on page 10 of this data sheet.

© Semiconductor Components Industries, LLC, 2013

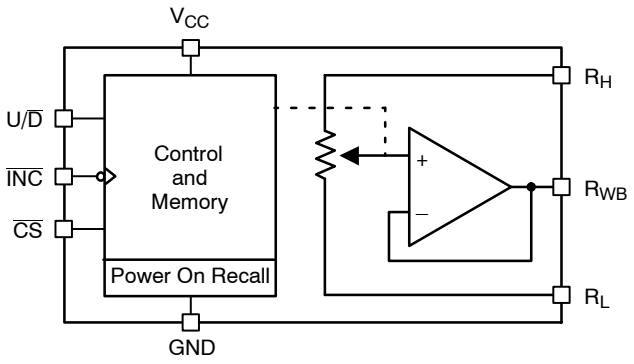

Figure 1. Functional Diagram

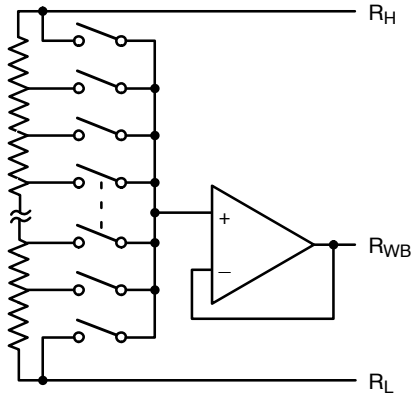

Figure 2. Electronic Potentiometer Implementation

Pin Description

$\overline{\text{INC}}$: Increment Control Input

The $\overline{\text{INC}}$ input (on the falling edge) moves the wiper in the up or down direction determined by the condition of the U/$\overline{\text{D}}$ input.

U/$\overline{\text{D}}$: Up/Down Control Input

The U/$\overline{\text{D}}$ input controls the direction of the wiper movement. When in a high state and $\overline{\text{CS}}$ is low, any high−to−low transition on $\overline{\text{INC}}$ will cause the wiper to move one increment toward the R_H terminal. When in a low state and $\overline{\text{CS}}$ is low, any high-to-low transition on $\overline{\text{INC}}$ will cause the wiper to move one increment towards the R_L terminal.

R_H: High End Potentiometer Terminal

R_H is the high end terminal of the potentiometer. It is not required that this terminal be connected to a potential greater than the R_L terminal. Voltage applied to the R_H terminal cannot exceed the supply voltage, V_{CC} or go below ground, GND.

R_{WB}: Wiper Potentiometer Terminal (Buffered)

R_{WB} is the buffered wiper terminal of the potentiometer. Its position on the resistor array is controlled by the control inputs, $\overline{\text{INC}}$, U/$\overline{\text{D}}$ and $\overline{\text{CS}}$.

R_L: Low End Potentiometer Terminal

R_L is the low end terminal of the potentiometer. It is not required that this terminal be connected to a potential less than the R_H terminal. Voltage applied to the R_L terminal cannot exceed the supply voltage, V_{CC} or go below ground, GND. R_L and R_H are electrically interchangeable.

$\overline{\text{CS}}$: Chip Select

The chip select input is used to activate the control input of the CAT5112 and is active low. When in a high state, activity on the $\overline{\text{INC}}$ and U/$\overline{\text{D}}$ inputs will not affect or change the position of the wiper.

Device Operation

The CAT5112 operates like a digitally controlled potentiometer with R_H and R_L equivalent to the high and low terminals and R_{WB} equivalent to the mechanical potentiometer's wiper. There are 32 available tap positions including the resistor end points, R_H and R_L. There are 31 resistor elements connected in series between the R_H and R_L terminals. The wiper terminal is connected to one of the 32 taps and controlled by three inputs, $\overline{\text{INC}}$, U/$\overline{\text{D}}$ and $\overline{\text{CS}}$. These inputs control a five-bit up/down counter whose output is decoded to select the wiper position. The selected wiper position can be stored in nonvolatile memory using the $\overline{\text{INC}}$ and $\overline{\text{CS}}$ inputs.

With $\overline{\text{CS}}$ set LOW the CAT5112 is selected and will respond to the U/$\overline{\text{D}}$ and $\overline{\text{INC}}$ inputs. HIGH to LOW transitions on $\overline{\text{INC}}$ will increment or decrement the wiper (depending on the state of the U/$\overline{\text{D}}$ input and five-bit counter). The wiper, when at either fixed terminal, acts like its mechanical equivalent and does not move beyond the last position. The value of the counter is stored in nonvolatile memory whenever $\overline{\text{CS}}$ transitions HIGH while the $\overline{\text{INC}}$ input is also HIGH. When the CAT5112 is powered-down, the last stored wiper counter position is maintained in the nonvolatile memory. When power is restored, the contents of the memory are recalled and the counter is set to the value stored.

With $\overline{\text{INC}}$ set low, the CAT5112 may be deselected and powered down without storing the current wiper position in nonvolatile memory. This allows the system to always power up to a preset value stored in nonvolatile memory.

Table 1. OPERATION MODES

$\overline{INC}$	$\overline{CS}$	U/$\overline{D}$	Operation
High to Low	Low	High	Wiper toward R_H
High to Low	Low	Low	Wiper toward R_L
High	Low to High	X	Store Wiper Position
Low	Low to High	X	No Store, Return to Standby
X	High	X	Standby

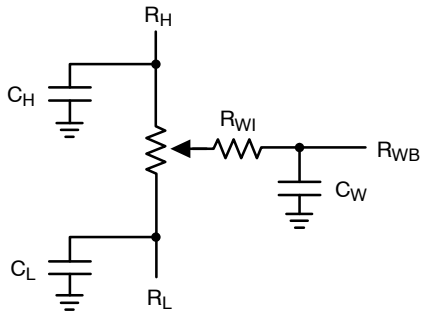

Figure 3. Potentiometer Equivalent Circuit

Table 2. ABSOLUTE MAXIMUM RATINGS

Parameters	Ratings	Units
Supply Voltage V_{CC} to GND	−0.5 to +7	V
Inputs $\overline{CS}$ to GND	−0.5 to V_{CC} +0.5	V
$\overline{INC}$ to GND	−0.5 to V_{CC} +0.5	V
U/$\overline{D}$ to GND	−0.5 to V_{CC} +0.5	V
R_H to GND	−0.5 to V_{CC} +0.5	V
R_L to GND	−0.5 to V_{CC} +0.5	V
R_{WB} to GND	−0.5 to V_{CC} +0.5	V
Operating Ambient Temperature Commercial (‘C’ or Blank suffix)	0 to 70	°C
Industrial (‘I’ suffix)	−40 to +85	°C
Junction Temperature	+150	°C
Storage Temperature	−65 to +150	°C
Lead Soldering (10 s max)	+300	°C

Stresses exceeding Maximum Ratings may damage the device. Maximum Ratings are stress ratings only. Functional operation above the Recommended Operating Conditions is not implied. Extended exposure to stresses above the Recommended Operating Conditions may affect device reliability.

Table 3. RELIABILITY CHARACTERISTICS

Symbol	Parameter	Test Method	Min	Typ	Max	Units
V_{ZAP} (Note 1)	ESD Susceptibility	MIL−STD−883, Test Method 3015	2000			V
I_{LTH} (Notes 1, 2)	Latch-Up	JEDEC Standard 17	100			mA
T_{DR}	Data Retention	MIL−STD−883, Test Method 1008	100			Years
N_{END}	Endurance	MIL−STD−883, Test Method 1003	1,000,000			Stores

1. This parameter is tested initially and after a design or process change that affects the parameter.
2. Latch-up protection is provided for stresses up to 100 mA on address and data pins from −1 V to V_{CC} + 1 V

Table 4. DC ELECTRICAL CHARACTERISTICS (V_{CC} = +2.5 V to +6 V unless otherwise specified)

Symbol	Parameter	Conditions	Min	Typ	Max	Units
POWER SUPPLY						
V_{CC}	Operating Voltage Range		2.5	–	6	V
I_{CC1}	Supply Current (Increment)	V_{CC} = 6 V, f = 1 MHz, I_W = 0	–	–	200	μA
		V_{CC} = 6 V, f = 250 kHz, I_W = 0	–	–	100	μA
I_{CC2}	Supply Current (Write)	Programming, V_{CC} = 6 V	–	–	1000	μA
		V_{CC} = 3 V	–	–	500	μA
I_{SB1} (Note 4)	Supply Current (Standby)	$\overline{CS}$ = V_{CC} − 0.3 V U/$\overline{D}$, $\overline{INC}$ = V_{CC} − 0.3 V or GND	–	75	150	μA
LOGIC INPUTS						
I_{IH}	Input Leakage Current	V_{IN} = V_{CC}	–	–	10	μA
I_{IL}	Input Leakage Current	V_{IN} = 0 V	–	–	−10	μA
V_{IH1}	TTL High Level Input Voltage	4.5 V ≤ V_{CC} ≤ 5.5 V	2	–	V_{CC}	V
V_{IL1}	TTL Low Level Input Voltage		0	–	0.8	V
V_{IH2}	CMOS High Level Input Voltage	2.5 V ≤ V_{CC} ≤ 6 V	V_{CC} x 0.7	–	V_{CC} + 0.3	V
V_{IL2}	CMOS Low Level Input Voltage		−0.3	–	V_{CC} x 0.2	V
POTENTIOMETER CHARACTERISTICS						
R_{POT}	Potentiometer Resistance	−10 Device		10		kΩ
		−50 Device		50		
		−00 Device		100		
	Pot. Resistance Tolerance				±20	%
V_{RH}	Voltage on R_H pin		0		V_{CC}	V
V_{RL}	Voltage on R_L pin		0		V_{CC}	V
	Resolution			1		%
INL	Integral Linearity Error	I_W ≤ 2 μA		0.5	1	LSB
DNL	Differential Linearity Error	I_W ≤ 2 μA		0.25	0.5	LSB
R_{OUT}	Buffer Output Resistance	0.05 V_{CC} ≤ V_{WB} ≤ 0.95 V_{CC}, V_{CC} = 5 V			1	Ω
I_{OUT}	Buffer Output Current	0.05 V_{CC} ≤ V_{WB} ≤ 0.95 V_{CC}, V_{CC} = 5 V			3	mA
TC_{RPOT}	TC of Pot Resistance			300		ppm/°C
TC_{RATIO}	Ratiometric TC			20		ppm/°C
$C_{RH}/C_{RL}/C_{RW}$	Potentiometer Capacitances			8/8/25		pF
fc	Frequency Response	Passive Attenuator, 10 kΩ		1.7		MHz
$V_{WB(SWING)}$	Output Voltage Range	I_{OUT} ≤ 100 μA, V_{CC} = 5 V	0.01 V_{CC}		0.99 V_{CC}	

3. This parameter is tested initially and after a design or process change that affects the parameter.
4. Latch-up protection is provided for stresses up to 100 mA on address and data pins from −1 V to V_{CC} + 1 V
5. I_W = source or sink
6. These parameters are periodically sampled and are not 100% tested.

Table 5. AC TEST CONDITIONS

V_{CC} Range	2.5 V ≤ V_{CC} ≤ 6 V
Input Pulse Levels	0.2 V_{CC} to 0.7 V_{CC}
Input Rise and Fall Times	10 ns
Input Reference Levels	0.5 V_{CC}

Table 6. AC OPERATING CHARACTERISTICS (V_{CC} = +2.5 V to +6.0 V, V_H = V_{CC}, V_L = 0 V, unless otherwise specified)

Symbol	Parameter	Min	Typ (Note 7)	Max	Units
t_{CI}	$\overline{CS}$ to $\overline{INC}$ Setup	100	–	–	ns
t_{DI}	U/$\overline{D}$ to $\overline{INC}$ Setup	50	–	–	ns
t_{ID}	U/$\overline{D}$ to $\overline{INC}$ Hold	100	–	–	ns
t_{IL}	$\overline{INC}$ LOW Period	250	–	–	ns
t_{IH}	$\overline{INC}$ HIGH Period	250	–	–	ns
t_{IC}	$\overline{INC}$ Inactive to $\overline{CS}$ Inactive	1	–	–	μs
t_{CPH}	$\overline{CS}$ Deselect Time (NO STORE)	100	–	–	ns
t_{CPH}	$\overline{CS}$ Deselect Time (STORE)	10	–	–	ms
t_{IW}	$\overline{INC}$ to V_{OUT} Change	–	1	5	μs
t_{CYC}	$\overline{INC}$ Cycle Time	1	–	–	μs
t_R, t_F (Note 8)	$\overline{INC}$ Input Rise and Fall Time	–	–	500	μs
t_{PU} (Note 8)	Power-up to Wiper Stable	–	–	1	ms
t_{WR}	Store Cycle	–	5	10	ms

7. Typical values are for T_A = 25°C and nominal supply voltage.
8. This parameter is periodically sampled and not 100% tested.
9. MI in the A.C. Timing diagram refers to the minimum incremental change in the W output due to a change in the wiper position.

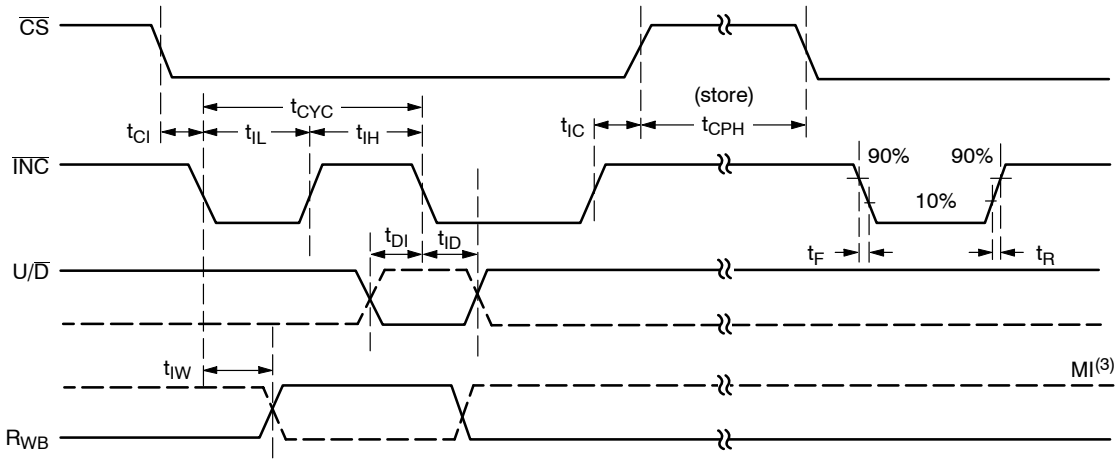

Figure 4. A.C. Timing

PACKAGE DIMENSIONS

PDIP−8, 300 mils
CASE 646AA
ISSUE A

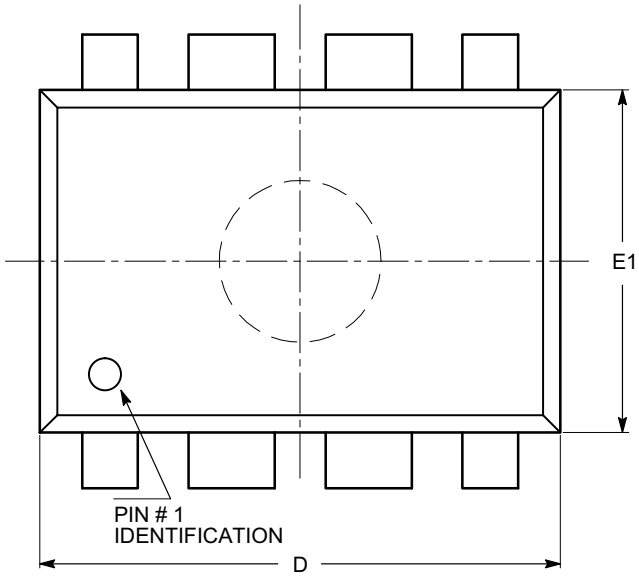

SYMBOL	MIN	NOM	MAX
A			5.33
A1	0.38		
A2	2.92	3.30	4.95
b	0.36	0.46	0.56
b2	1.14	1.52	1.78
c	0.20	0.25	0.36
D	9.02	9.27	10.16
E	7.62	7.87	8.25
E1	6.10	6.35	7.11
e		2.54 BSC	
eB	7.87		10.92
L	2.92	3.30	3.80

TOP VIEW

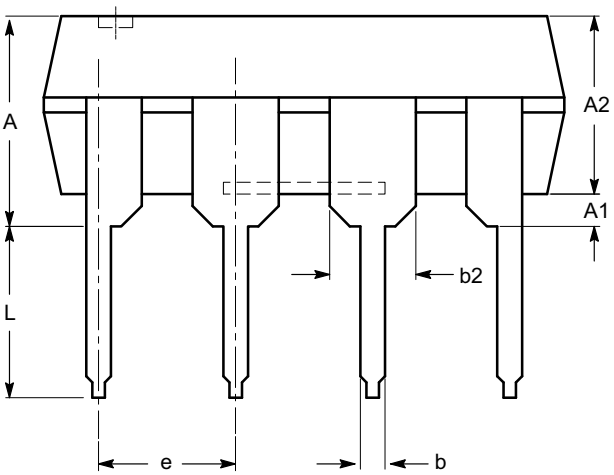

SIDE VIEW

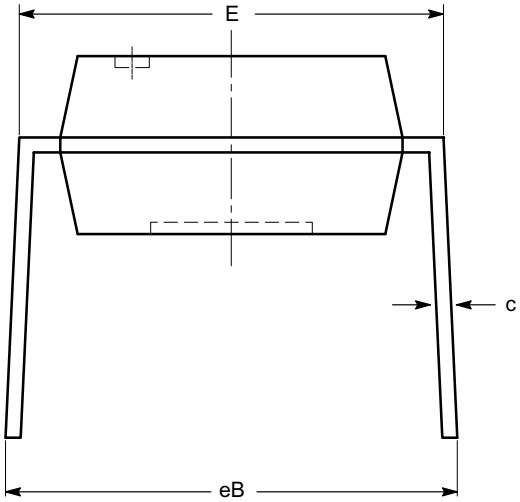

END VIEW

Notes:
(1) All dimensions are in millimeters.
(2) Complies with JEDEC MS-001.

PACKAGE DIMENSIONS

SOIC 8, 150 mils
CASE 751BD
ISSUE O

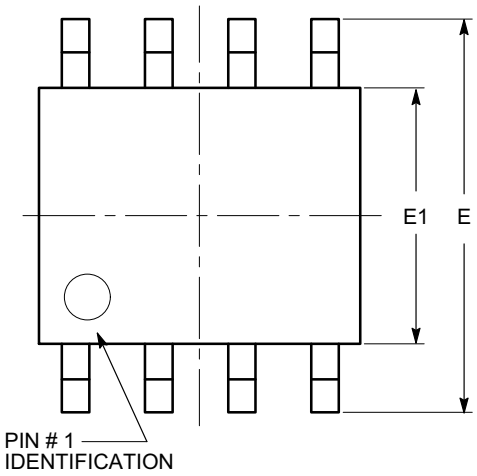

TOP VIEW

SYMBOL	MIN	NOM	MAX
A	1.35		1.75
A1	0.10		0.25
b	0.33		0.51
c	0.19		0.25
D	4.80		5.00
E	5.80		6.20
E1	3.80		4.00
e		1.27 BSC	
h	0.25		0.50
L	0.40		1.27
θ	0º		8º

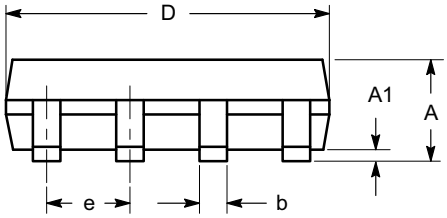

SIDE VIEW

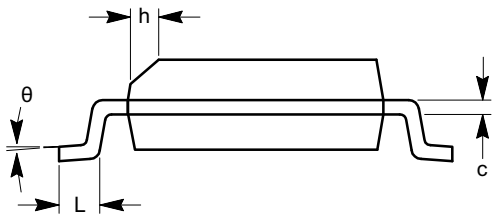

END VIEW

Notes:
(1) All dimensions are in millimeters. Angles in degrees.
(2) Complies with JEDEC MS-012.

PACKAGE DIMENSIONS

TSSOP8, 4.4x3
CASE 948AL
ISSUE O

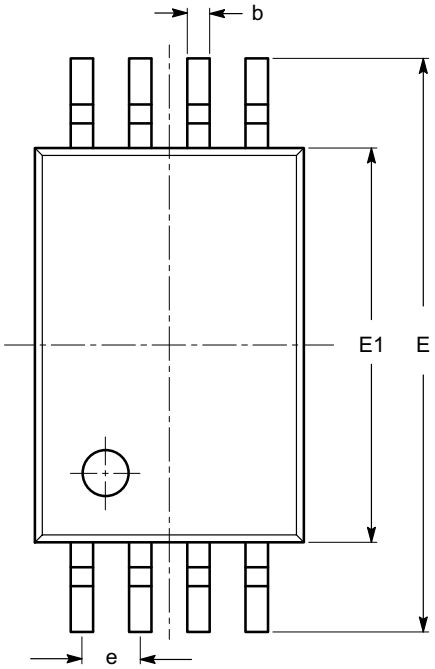

TOP VIEW

SYMBOL	MIN	NOM	MAX
A			1.20
A1	0.05		0.15
A2	0.80	0.90	1.05
b	0.19		0.30
c	0.09		0.20
D	2.90	3.00	3.10
E	6.30	6.40	6.50
E1	4.30	4.40	4.50
e	0.65 BSC		
L	1.00 REF		
L1	0.50	0.60	0.75
θ	0º		8º

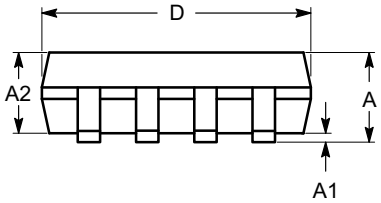

SIDE VIEW

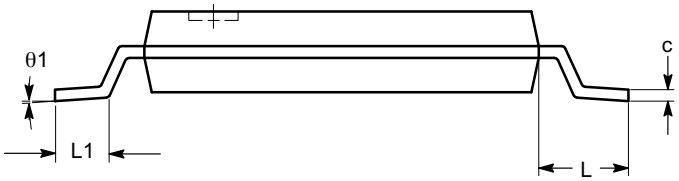

END VIEW

Notes:
(1) All dimensions are in millimeters. Angles in degrees.
(2) Complies with JEDEC MO-153.

PACKAGE DIMENSIONS

MSOP 8, 3x3
CASE 846AD
ISSUE O

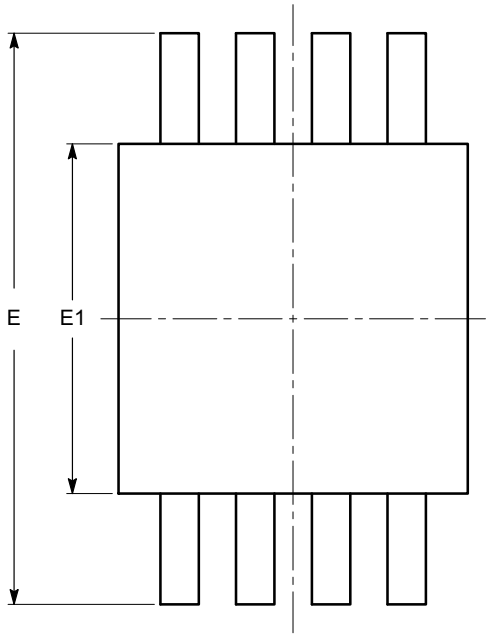

TOP VIEW

SYMBOL	MIN	NOM	MAX
A			1.10
A1	0.05	0.10	0.15
A2	0.75	0.85	0.95
b	0.22		0.38
c	0.13		0.23
D	2.90	3.00	3.10
E	4.80	4.90	5.00
E1	2.90	3.00	3.10
e	0.65 BSC		
L	0.40	0.60	0.80
L1	0.95 REF		
L2	0.25 BSC		
θ	0º		6º

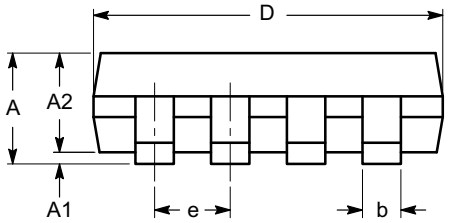

SIDE VIEW

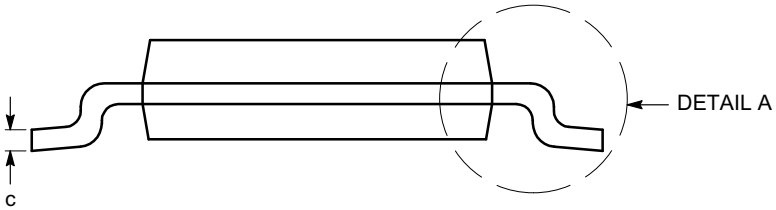

END VIEW

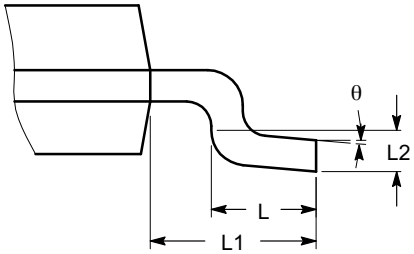

DETAIL A

Notes:
(1) All dimensions are in millimeters. Angles in degrees.
(2) Complies with JEDEC MO-187.

Table 7. ORDERING INFORMATION

Device Order Number	Specific Device Marking	Package Type	Temperature Range	Lead Finish	Shipping†
CAT5112VI−10−GT3	CAT5112V	SOIC−8	−40°C to +85°C	NiPdAu	Tape & Reel, 3,000 Units / Reel
CAT5112VI−50−GT3	CAT5112V	SOIC−8	−40°C to +85°C	NiPdAu	Tape & Reel, 3,000 Units / Reel
CAT5112VI−00−GT3	CAT5112V	SOIC−8	−40°C to +85°C	NiPdAu	Tape & Reel, 3,000 Units / Reel
CAT5112YI−10−GT3	A22	TSSOP−8	−40°C to +85°C	NiPdAu	Tape & Reel, 3,000 Units / Reel
CAT5112YI−50−GT3	A24	TSSOP−8	−40°C to +85°C	NiPdAu	Tape & Reel, 3,000 Units / Reel
CAT5112YI−00−GT3	A25	TSSOP−8	−40°C to +85°C	NiPdAu	Tape & Reel, 3,000 Units / Reel
CAT5112ZI−10−GT3	ABPN	MSOP−8	−40°C to +85°C	NiPdAu	Tape & Reel, 3,000 Units / Reel
CAT5112ZI−50−GT3	ABPN	MSOP−8	−40°C to +85°C	NiPdAu	Tape & Reel, 3,000 Units / Reel
CAT5112ZI−00−GT3	ABPN	MSOP−8	−40°C to +85°C	NiPdAu	Tape & Reel, 3,000 Units / Reel
CAT5112LI−10−G	CAT5112L	PDIP−8	−40°C to +85°C	NiPdAu	Rail, 50 Units
CAT5112LI−50−G	CAT5112L	PDIP−8	−40°C to +85°C	NiPdAu	Rail, 50 Units
CAT5112LI−00−G	CAT5112L	PDIP−8	−40°C to +85°C	NiPdAu	Rail, 50 Units

†For information on tape and reel specifications, including part orientation and tape sizes, please refer to our Tape and Reel Packaging Specifications Brochure, BRD8011/D.

10. For detailed information and a breakdown of device nomenclature and numbering systems, please see the ON Semiconductor Device Nomenclature document, TND310/D, available at www.onsemi.com

ON Semiconductor and ON are registered trademarks of Semiconductor Components Industries, LLC (SCILLC). SCILLC owns the rights to a number of patents, trademarks, copyrights, trade secrets, and other intellectual property. A listing of SCILLC's product/patent coverage may be accessed at www.onsemi.com/site/pdf/Patent−Marking.pdf. SCILLC reserves the right to make changes without further notice to any products herein. SCILLC makes no warranty, representation or guarantee regarding the suitability of its products for any particular purpose, nor does SCILLC assume any liability arising out of the application or use of any product or circuit, and specifically disclaims any and all liability, including without limitation special, consequential or incidental damages. "Typical" parameters which may be provided in SCILLC data sheets and/or specifications can and do vary in different applications and actual performance may vary over time. All operating parameters, including "Typicals" must be validated for each customer application by customer's technical experts. SCILLC does not convey any license under its patent rights nor the rights of others. SCILLC products are not designed, intended, or authorized for use as components in systems intended for surgical implant into the body, or other applications intended to support or sustain life, or for any other application in which the failure of the SCILLC product could create a situation where personal injury or death may occur. Should Buyer purchase or use SCILLC products for any such unintended or unauthorized application, Buyer shall indemnify and hold SCILLC and its officers, employees, subsidiaries, affiliates, and distributors harmless against all claims, costs, damages, and expenses, and reasonable attorney fees arising out of, directly or indirectly, any claim of personal injury or death associated with such unintended or unauthorized use, even if such claim alleges that SCILLC was negligent regarding the design or manufacture of the part. SCILLC is an Equal Opportunity/Affirmative Action Employer. This literature is subject to all applicable copyright laws and is not for resale in any manner.

PUBLICATION ORDERING INFORMATION

LITERATURE FULFILLMENT:
Literature Distribution Center for ON Semiconductor
P.O. Box 5163, Denver, Colorado 80217 USA
Phone: 303−675−2175 or 800−344−3860 Toll Free USA/Canada
Fax: 303−675−2176 or 800−344−3867 Toll Free USA/Canada
Email: orderlit@onsemi.com

N. American Technical Support: 800−282−9855 Toll Free USA/Canada
Europe, Middle East and Africa Technical Support:
Phone: 421 33 790 2910
Japan Customer Focus Center
Phone: 81−3−5817−1050

ON Semiconductor Website: **www.onsemi.com**

Order Literature: http://www.onsemi.com/orderlit

For additional information, please contact your local Sales Representative

Общество с ограниченной ответственностью «МосЧип» ИНН 7719860671 / КПП 771901001
Адрес: 105318, г.Москва, ул.Щербаковская д.3, офис 1107

Данный компонент на территории Российской Федерации

Вы можете приобрести в компании MosChip.

Для оперативного оформления запроса Вам необходимо перейти по данной ссылке:

http://moschip.ru/get-element

Вы можете разместить у нас заказ для любого Вашего проекта, будь то серийное производство или разработка единичного прибора.

В нашем ассортименте представлены ведущие мировые производители активных и пассивных электронных компонентов.

Нашей специализацией является поставка электронной компонентной базы двойного назначения, продукции таких производителей как XILINX, Intel (ex.ALTERA), Vicor, Microchip, Texas Instruments, Analog Devices, Mini-Circuits, Amphenol, Glenair.

Сотрудничество с глобальными дистрибьюторами электронных компонентов, предоставляет возможность заказывать и получать с международных складов практически любой перечень компонентов в оптимальные для Вас сроки.

На всех этапах разработки и производства наши партнеры могут получить квалифицированную поддержку опытных инженеров.

Система менеджмента качества компании отвечает требованиям в соответствии с ГОСТ Р ИСО 9001, ГОСТ РВ 0015-002 и ЭС РД 009

Офис по работе с юридическими лицами:

105318, г.Москва, ул.Щербаковская д.3, офис 1107, 1118, ДЦ «Щербаковский»

Телефон: +7 495 668-12-70 (многоканальный)

Факс: +7 495 668-12-70 (доб.304)

E-mail: info@moschip.ru

Skype отдела продаж:
moschip.ru
moschip.ru_4
moschip.ru_6
moschip.ru_9