FO-55113-B

HONEYWELL PART NUMBER

DC SERIES CHART 6

REV	DOCUMENT	CHANGED BY	CHECK
B	0036344	SSK 18DEC07	CMH

DC B R 5

- SERIES
- PRESSURE RANGE: 2.5, 05, 10, 25, 50, 75
- UNITS: B = mbar
- MEASUREMENT TYPE: G = Gage, D = Differential / Bi-directional Gage
- C : RATIOMETRIC, R : REGULATED
- SPAN VOLTAGE

NOTES

1. REFERENCE CONDITIONS (UNLESS OTHERWISE NOTED): SUPPLY VOLTAGE, Vs = 15 Vdc, TA = 25°C, COMMON MODE LINE PRESSURE = 0 PSIG. PRESSURE MEASUREMENTS ARE WITH PRESSURE APPLIED TO PORT 2
2. HI/LO SPAN IS THE ALGEBRAIC DIFFERENCE BETWEEN OFFSET OUTPUT AND HI OR LO OUTPUTS
3. SHIFT IS RELATIVE TO 25°C
4. SHIFT IS WITHIN THE FIRST HOUR OF EXCITATION APPLIED TO THE DEVICE
5. LINEARITY IS DETERMINED USING BEST STRAIGHT LINE CURVE FIT THROUGH ZERO, 1/2 FULL SCALE, AND FULL SCALE; HYSTERESIS IS MECHANICAL ONLY
6. SPAN IS THE ALGEBRAIC DIFFERENCE OF OUTPUT END POINTS (OUTPUT AT SPECIFIED HI AND LOW OUTPUT LIMITS)
7. TOTAL ERROR INCLUDES OFFSET & SPAN ERRORS, ZERO CALIBRATION, TEMPERATURE EFFECT ON ZERO AND SPAN, NONLINEARITY. HYSTERESIS, REPEATABILITY AND STABILITY OVER COMPENSATED TEMPERATURE RANGE.
8. ACCURACY INCLUDES NONLINEARITY, HYSTERESIS AND REPEATABILITY.

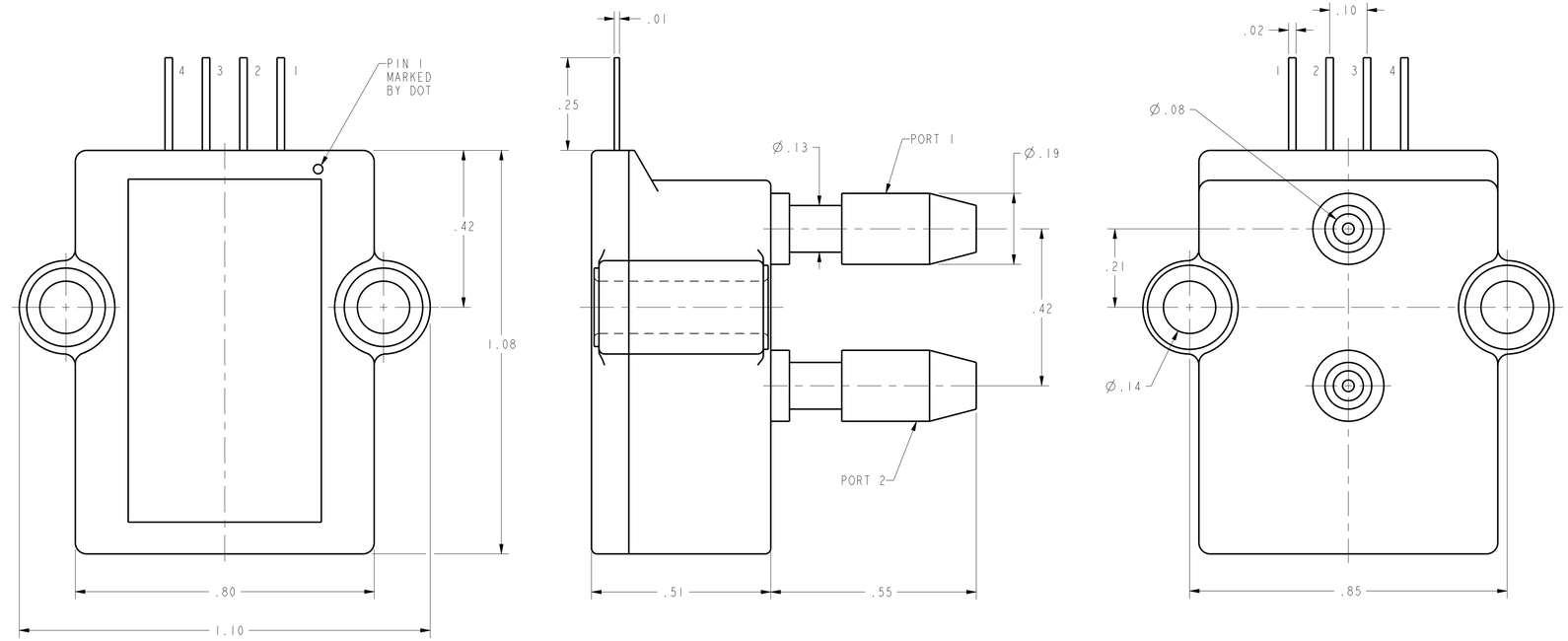

ELECTRICAL SPECIFICATIONS

	PARAMETER	PRESSURE RANGE (mbar)	MIN	NOM	MAX	UNITS
DIFFERENTIAL	OFFSET VOLTAGE (NULL AT 0 in H2O)	ALL		3.250		V
	SPAN (HI SPAN - LO SPAN) [6]			5.000		
	SPAN (P1 > P2) [2]			-2.500		
	SPAN (P2 > P1) [2]			2.500		
GAGE	OFFSET VOLTAGE (NULL AT 0 in H2O)	ALL		0.250		%SPAN
	FULL SCALE OUTPUT (P2 > P1)			5.250		%SPAN
						mV
	SPAN (FULL SCALE OUTPUT - OFFSET) [6]			5.000		mV
TOTAL ERROR [7]		2.5		+/- 2	+/- 3	mV
		05		+/- 1.5	+/- 2.5	
		10, 25, 50, 75		+/- 1	+/- 2	
OFFSET WARM-UP SHIFT [4]		2.5, 05		20		mV
		10, 25, 50, 75		20		%FS
OFFSET POSITION SENSITIVITY (+/- 1g)		2.5, 05		10		
		10		5		
		25, 50, 75		1		
OFFSET LONG TERM DRIFT (ONE YEAR)		ALL		100		
ACCURACY [8]		ALL		0.05		

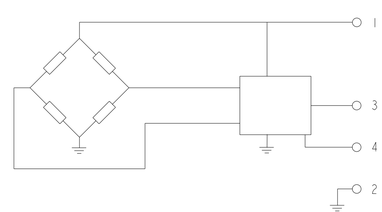

EQUIVALENT CIRCUIT

CATALOG LISTINGS
DC2R5BGR5
DC001BGR5
DC002BGR5
DC005BGR5
DC010BGR5
DC025BGR5
DC050BGR5
DC075BGR5
DC2R5BDR5
DC001BDR5
DC002BDR5
DC005BDR5
DC010BDR5
DC025BDR5
DC050BDR5
DC075BDR5

MAXIMUM RATINGS

PARAMETER	PRESSURE RANGE (mbar)	MIN	MAX	UNITS
OPERATING TEMPERATURE RANGE		-25	85	°C
STORAGE TEMPERATURE	ALL	-45	125	°C
PROOF PRESSURE (VERIFIED BY TEST)	ALL	5		PSIG
BURST PRESSURE (VERIFIED BY DESIGN)	2.5		125	mbar
	05		250	
	10, 25		375	
	50		750	
	75		1125	
EXCITATION VOLTAGE	ALL	3	16	V
COMMON MODE PRESSURE	ALL		50	PSIG

PIN OUT	
1	$V_{EXCITATION}$
2	COMMON
3	V_{OUTPUT}
4	NOT FOR CUSTOMER USE. DO NOT CONNECT.

MEDIA CAPABILITY, WETTED MATERIALS (APPLY CLEAN DRY AIR ONLY)	
PRESSURE PORT 2 (HIGH)	SILICON DIAPHRAGM, GLASS FILLED NYLON, AND ALUMINA CERAMIC. PRESSURE MEASURING PORT
PRESSURE PORT 1 (LOW)	SILICON DIAPHRAGM, GLASS FILLED NYLON, AND ALUMINA CERAMIC. THE VENT PORT

PRESSURE COMPATIBILITY:

MEASURES DIFFERENTIAL OR GAGE PRESSURE ONLY WITH POSITIVE PRESSURE TO PORT 2. THERE WILL BE A SMALL OUTPUT VOLTAGE BETWEEN THE ACTUAL OFFSET VOLTAGE AND GROUND PROPORTIONAL TO VACUUM IF APPLIED TO PORT 2

RATIOMETRIC OUTPUT:

THE OUTPUT VOLTAGE OF THE SENSOR IS NOMINALLY RATIOMETRIC, PROPORTIONAL, TO THE EXCITATION VOLTAGE. FOR THIS MODEL SENSOR ALL SPECIFICATIONS WILL CHANGE PROPORTIONALLY TO ANY CHANGES IN THE EXCITATION VOLTAGE. THE EXCITATION MAY VARY BETWEEN 3 TO 16 VOLTS. ALL SPECIFICATIONS WILL NOMINALLY BE CHANGED BY A RATIO OF $V_{EXCITATION}$/5.0 VOLTS. FOR EXAMPLE: IF THE EXCITATION VOLTAGE IS 3.0 VOLTS THEN BOTH THE FULL SCALE OUTPUT VOLTAGE AND THE OFFSET VOLTAGE WOULD BE 3/5TH THE SPECIFIED VALUE

DESIGN UNITS: INCH
TOLERANCES UNLESS NOTED:

NO PLACES	X	±	0.400
ONE PLACE	.X	±	0.030
TWO PLACE	.XX	±	0.015
THREE PLACE	.XXX	±	0.005
ANGLES	X	±	3°

THIRD ANGLE PROJECTION

DRAWN	SK	12OCT06
CHECK	CMH	12OCT06

THIS DRAWING COVERS A PROPRIETARY ITEM AND IS THE PROPERTY OF HONEYWELL. THIS DRAWING IS NOT TO BE COPIED OR USED WITHOUT THE PERMISSION OF HONEYWELL.

INTERPRET PER ASME Y14.5M-1994 OTHER HONEYWELL ENGINEERING STANDARDS MAY APPLY

Pro/ENGINEER 3D

Honeywell

TITLE: PRESSURE SENSOR

SIZE	TYPE	DRAWING NAME	REV
D	I	DC SERIES CHART 6	B

SCALE 5:1 SHEET 1 OF 1

Общество с ограниченной ответственностью «МосЧип» ИНН 7719860671 / КПП 771901001
Адрес: 105318, г.Москва, ул.Щербаковская д.3, офис 1107

Данный компонент на территории Российской Федерации

Вы можете приобрести в компании MosChip.

Для оперативного оформления запроса Вам необходимо перейти по данной ссылке:

http://moschip.ru/get-element

Вы можете разместить у нас заказ для любого Вашего проекта, будь то серийное производство или разработка единичного прибора.

В нашем ассортименте представлены ведущие мировые производители активных и пассивных электронных компонентов.

Нашей специализацией является поставка электронной компонентной базы двойного назначения, продукции таких производителей как XILINX, Intel (ex.ALTERA), Vicor, Microchip, Texas Instruments, Analog Devices, Mini-Circuits, Amphenol, Glenair.

Сотрудничество с глобальными дистрибьюторами электронных компонентов, предоставляет возможность заказывать и получать с международных складов практически любой перечень компонентов в оптимальные для Вас сроки.

На всех этапах разработки и производства наши партнеры могут получить квалифицированную поддержку опытных инженеров.

Система менеджмента качества компании отвечает требованиям в соответствии с ГОСТ Р ИСО 9001, ГОСТ РВ 0015-002 и ЭС РД 009

Офис по работе с юридическими лицами:

105318, г.Москва, ул.Щербаковская д.3, офис 1107, 1118, ДЦ «Щербаковский»

Телефон: +7 495 668-12-70 (многоканальный)

Факс: +7 495 668-12-70 (доб.304)

E-mail: info@moschip.ru

Skype отдела продаж:
moschip.ru
moschip.ru_4
moschip.ru_6
moschip.ru_9