3M™ DIP Socket

Screw Machine

100 Series

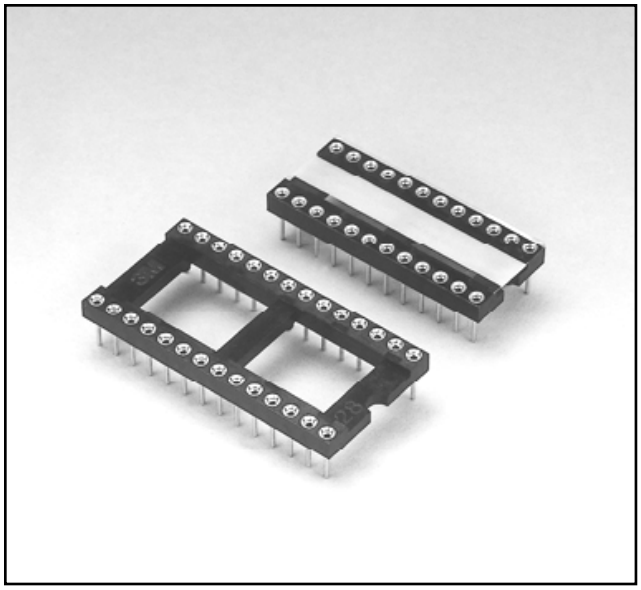

- Accepts various DIP packages
- Reliable four finger contact interface
- Unique body design prevents air voids during soldering
- Inner contact aligned to maximize contact surface area
- Optional seal tape for closed-body configuration
- See Regulatory Information Appendix (RIA) for chemical compliance information

Date Modified: August 8, 2008

TS-2115-D
Sheet 1 of 2

DISCONTINUED

Physical

Insulation Material:	Glass Filled PPS
Flammability:	UL 94V-0
Color:	Black
Contact Material:	
Sleeve:	Brass
Inner contact:	Beryllium Copper
Plating: Underplating	100 μ" [2.54 μm] min. Nickel
Wiping Area:	8 μ" [0.2 μm] min. Gold
Terminal Area:	Gold Flash (RoHS compliant)
Seal Tape (optional) Material:	Polyester
Color:	White
Mating Device Leads:	
Rectangular Lead:	W 0.38 ~ 0.50 mm X T 0.20 ~ 0.40 (0.50 mm max. Diagonal)
Circular Lead:	ø 0.40 ~ 0.50 mm
Length:	2.9 mm min.
Marking:	None

Electrical

Current Resistance:	< 25mΩ
Current Rating:	1 A
Insulation Resistance:	1,000 M at 500 V_{DC}
Withstanding Voltage:	1,000 V_{AC} rms for 1 minute

Environmental

Temperature Rating:	-65°C to +125°C
Process Rating:	260°C MAX for 5 seconds, (Dipping: One time) Not for reflow soldering.

3M is a trademark of 3M Company.

For technical, sales or ordering information call
800-225-5373

3M™ DIP Socket

Screw Machine

100 Series

Inch
[mm]

Tolerance Unless Noted			
	.0	.00	.000
inch	±.1	±.01	±.005

[ ] Dimensions for Reference Only

Contact Quantity	Description	Dim A	Dim B	Dim C	Dim D
6	100-006-0XX	.300 [7.62]	.400 [10.16]	.200 [5.08]	.300 [7.62]
8	100-008-0XX	.400[10.16]	.400 [10.16]	.300 [7.62]	.300 [7.62]
10	100-010-0XX	.500 [12.70]	.400 [10.16]	.400 [10.16]	.300 [7.62]
14	100-014-0XX	.700 [17.78]	.400 [10.16]	.600 [15.24]	.300 [7.62]
16	100-016-0XX	.800 [20.32]	.400 [10.16]	.700 [17.78]	.300 [7.62]
18	100-018-0XX	.900 [22.86]	.400 [10.16]	.800 [20.32]	.300 [7.62]
20	100-020-0XX	1.000 [25.40]	.400 [10.16]	.900 [22.86]	.300 [7.62]
22	100-022-0XX	1.100 [27.94]	.500 [12.70]	1.000 [25.4]	.400 [10.16]
24	130-024-0XX	1.200 [30.48]	.400 [10.16]	1.100 [27.94]	.300 [7.62]
24	110-024-0XX	1.200 [30.48]	.500 [12.70]	1.100 [27.94]	.400 [10.16]
24	100-024-0XX	1.200 [30.48]	.700 [17.78]	1.100 [27.94]	.600 [15.24]
28	130-028-0XX	1.400 [35.56]	.400 [10.16]	1.300 [33.02]	.300 [7.62]
28	100-028-0XX	1.400 [35.56]	.700 [17.78]	1.300 [33.02]	.600 [15.24]
32	100-032-0XX	1.600 [40.64]	.700 [17.78]	1.500 [38.10]	.600 [15.24]
40	100-040-0XX	2.000 [50.80]	.700 [17.78]	1.900 [48.26]	.600 [15.24]
42	100-042-0XX	2.100 [53.34]	.700 [17.78]	2.000 [50.80]	.600 [15.24]
48	100-048-0XX	2.400 [60.96]	.700 [17.78]	2.300 [58.42]	.600 [15.24]
64	100-064-0XX	3.200 [81.28]	1.00 [25.40]	3.100 [78.74]	.900 [22.86]

DISCONTINUED

Note 1

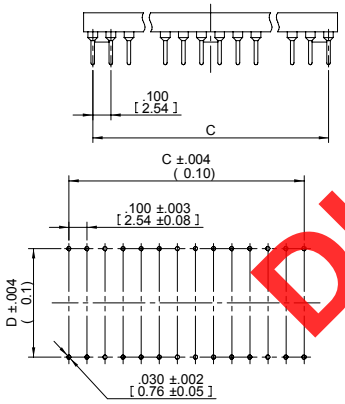

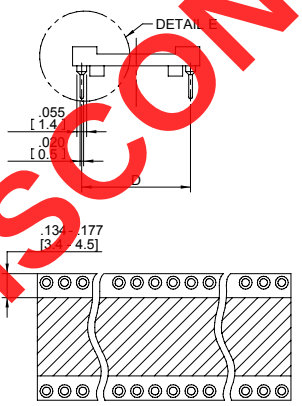

WITH SEAL TAPE (-001 TYPE)

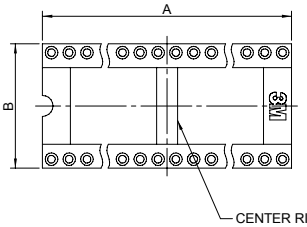

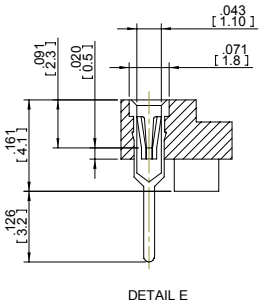

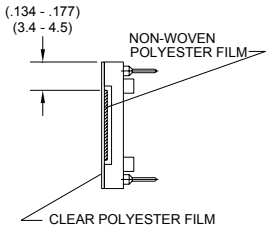

Notes:

1. Number of central ribs depends on contact quantity. 6-8Ld has no ribs. 10-32Ld has 1 rib. 40-48Ld has 2 ribs. 64Ld has 3 ribs|
2. Not for reflow soldering.

Ordering Information

1X0-0XX-05X (RIA E1 and C1 Apply)

Contact Pitch / Dim. D:
0 = Standard (See Table)
1 = .400 in (24 Ld only)
3 = .300 in (Thin 24 Ld & 28 Ld only)

Contact Quantity
(See Table)

Seal Tape:
0 = Without Seal Tape
1= With Seal Tape

TS-2115-C
Sheet 2 of 2

3M is a trademark of 3M Company.

For technical, sales or ordering information call
800-225-5373

Regulatory Information Appendix

3M Electronic Solutions Division/Interconnect

EUROPE

Appendix E1: European Union RoHS

Directive 2002/95/EC, Restriction of the Use of Certain Hazardous Substances in Electrical & Electronic Equipment, as amended by EU Commission Decision 2005/618/EC.

This product is RoHS Compliant 2005/95/EC.

"RoHS Compliant 2005/95/EC" means that the product or part ("Product") does not contain any of the substances in excess of the maximum concentration values in EU Directive 2002/95/EC, as amended by Commission Decision 2005/618/EC, unless the substance is in an application that is exempt under EU RoHS. Unless otherwise stated by 3M in writing, this information represents 3M's best knowledge and belief based upon information provided by third party suppliers to 3M.

In the event any product is proven not to conform with 3M's Regulatory Information Appendix, then 3M's entire liability and Buyer's exclusive remedy will be in accordance with the Warranty stated below.

Appendix E2: European Union RoHS

Directive 2002/95/EC, Restriction of the Use of Certain Hazardous Substances in Electrical & Electronic Equipment, as amended by EU Commission Decision 2005/618/EC.

This product contains lead in the compliant pin area in excess of the maximum concentration value allowed but is compliant by exemption under EU Commission Decision 2005/747/EC.

"RoHS Compliant 2005/95/EC" means that the product or part ("Product") does not contain any of the substances in excess of the maximum concentration values in EU Directive 2002/95/EC, as amended by Commission Decision 2005/618/EC, unless the substance is in an application that is exempt under EU RoHS. Unless otherwise stated by 3M in writing, this information represents 3M's best knowledge and belief based upon information provided by third party suppliers to 3M.

In the event any product is proven not to conform with 3M's Regulatory Information Appendix, then 3M's entire liability and Buyer's exclusive remedy will be in accordance with the Warranty stated below.

Appendix E3: European Union RoHS

Directive 2002/95/EC, Restriction of the Use of Certain Hazardous Substances in Electrical & Electronic Equipment as amended by Commission Decision 2005/618/EC.

This product contains lead in the solder tail area in excess of the maximum concentration value allowed.

Unless otherwise stated by 3M in writing, this information represents 3M's best knowledge and belief based upon information provided by third party suppliers to 3M.

In the event any product is proven not to conform with 3M's Regulatory Information Appendix, then 3M's entire liability and Buyer's exclusive remedy will be in accordance with the Warranty stated below.

Appendix E4: European Union RoHS

Directive 2002/95/EC, Restriction of the Use of Certain Hazardous Substances in Electrical & Electronic Equipment, as amended by EU Commission Decision 2005/618/EC.

This product contains decaBDE in the insulating material in excess of the maximum concentration value allowed but is compliant by exemption under EU Commission Decision 2005/717/EC.

"RoHS Compliant 2005/95/EC" means that the product or part ("Product") does not contain any of the substances in excess of the maximum concentration values in EU Directive 2002/95/EC, as amended by Commission Decision 2005/618/EC, unless the substance is in an application that is exempt under EU RoHS. Unless otherwise stated by 3M in writing, this information represents 3M's best knowledge and belief based upon information provided by third party suppliers to 3M.

In the event any product is proven not to conform with 3M's Regulatory Information Appendix, then 3M's entire liability and Buyer's exclusive remedy will be in accordance with the Warranty stated below.

DISCONTINUED

Appendix E5: European Union RoHS

Directive 2002/95/EC, Restriction of the Use of Certain Hazardous Substances in Electrical and Electronic Equipment, as amended by EU Commission Decision 2005/618/EC.

This product contains lead in excess of the maximum concentration value allowed but is compliant by exemption under Item 6 of the Annex to the Directive.

"RoHS Compliant 2005/95/EC" means that the product or part ("Product") does not contain any of the substances in excess of the maximum concentration values in EU Directive 2002/95/EC, as amended by Commission Decision 2005/618/EC, unless the substance is in an application that is exempt under EU RoHS. Unless otherwise stated by 3M in writing, this information represents 3M's best knowledge and belief based upon information provided by third party suppliers to 3M.

In the event any product is proven not to conform with 3M's Regulatory Information Appendix, then 3M's entire liability and Buyer's exclusive remedy will be in accordance with the Warranty stated below.

CHINA

Appendix C1: China RoHS

Electronic Industry Standard of the People's Republic of China, SJ/T11363-2006, Requirements for Concentration Limits for Certain Hazardous Substances in Electronic Information Products.
This symbol, per Marking for the Control of Pollution Caused by Electronic Information Products, SJ/T11364-2006, means that the product or part **does not** contain any of the following substances in excess of the following maximum concentration values in any homogeneous material: (a) 0.1% (by weight) for lead, mercury, hexavalent chromium, polybrominated biphenyls or polybrominated diphenyl ethers; or (b) 0.01% (by weight) for cadmium. Unless otherwise stated by 3M in writing, this information represents 3M's best knowledge and belief based upon information provided by third party suppliers to 3M.

In the event any product is proven not to conform with 3M's Regulatory Information Appendix, then 3M's entire liability and Buyer's exclusive remedy will be in accordance with the Warranty stated below.

DISCONTINUED

Appendix C2: China RoHS

Electronic Industry Standard of the People's Republic of China, SJ/T11363-2006, Requirements for Concentration Limits for Certain Hazardous Substances in Electronic Information Products.
This symbol, per Marking for the Control of Pollution Caused by Electronic Information Products, SJ/T11364-2006, means that the product or part **does** contain a substance, as detailed in the chart below, in excess of the following maximum concentration values in any homogeneous material: (a) 0.1% (by weight) for lead, mercury, hexavalent chromium, polybrominated biphenyls or polybrominated diphenyl ethers; or (b) 0.01% (by weight) for cadmium. Unless otherwise stated by 3M in writing, this information represents 3M's best knowledge and belief based upon information provided by third party suppliers to 3M.

The numerical reference in the symbol above should not be construed as a representation regarding the product's life or an extension of a product warranty. The product warranty is stated below. In the event any product is proven not to conform with 3M's Regulatory Information Appendix, then 3M's entire liability and Buyer's exclusive remedy will be in accordance with the product Warranty stated below.

产品中有毒有害物质或元素的名称及含量 Name and Content of Hazardous Substances or Elements

部件名称 (Part or Component Name)	有毒有害物质或元素 (Hazardous Substances or Elements)					
	铅(Pb)	汞 (Hg)	镉 (Cd)	六价铬 (Cr(VI))	多溴联苯 (PBB)	多溴二苯醚 (PBDE)
端子镀层(contact plating)	×	○	○	○	○	○

○：表示该有毒有害物质在该部件所有均质材料中的含量均在SJ/T11363-2006 标准规定的限量要求以下。(Indicates that this hazardous substance contained in all of the homogeneous materials for this part is below the limit requirement in SJ/T11363-2006.)
×：表示该有毒有害物质至少在该部件的某一均质材料中的含量超出SJ/T11363-2006 标准规定的限量要求。(Indicates that this hazardous substance contained in at least one of the homogeneous materials used for this part is above the limit requirement in SJ/T11363-2006.)

Appendix C3: China RoHS

Electronic Industry Standard of the People's Republic of China, SJ/T11363-2006, Requirements for Concentration Limits for Certain Hazardous Substances in Electronic Information Products.

This symbol, per Marking for the Control of Pollution Caused by Electronic Information Products, SJ/T11364-2006, means that the product or part **does** contain a substance, as detailed in the chart below, in excess of the following maximum concentration values in any homogeneous material: (a) 0.1% (by weight) for lead, mercury, hexavalent chromium, polybrominated biphenyls or polybrominated diphenyl ethers; or (b) 0.01% (by weight) for cadmium. Unless otherwise stated by 3M in writing, this information represents 3M's best knowledge and belief based upon information provided by third party suppliers to 3M.

The numerical reference in the symbol above should not be construed as a representation regarding the product's life or an extension of a product warranty. The product warranty is stated below. In the event any product is proven not to conform with 3M's Regulatory Information Appendix, then 3M's entire liability and Buyer's exclusive remedy will be in accordance with the product Warranty stated below.

产品中有毒有害物质或元素的名称及含量 Name and Content of Hazardous Substances or Elements

部件名称 (Part or Component Name)	有毒有害物质或元素 (Hazardous Substances or Elements)					
	铅(Pb)	汞 (Hg)	镉 (Cd)	六价铬 (Cr(VI))	多溴联苯 (PBB)	多溴二苯醚 (PBDE)
合金(Metal alloy)	×	○	○	○	○	○

○：表示该有毒有害物质在该部件所有均质材料中的含量均在SJ/T11363-2006 标准规定的限量要求以下。(Indicates that this hazardous substance contained in all of the homogeneous materials for this part is below the limit requirement in SJ/T11363-2006.)
×：表示该有毒有害物质至少在该部件的某一均质材料中的含量超出SJ/T11363-2006 标准规定的限量要求。(Indicates that this hazardous substance contained in at least one of the homogeneous materials used for this part is above the limit requirement in SJ/T11363-2006.)

DISCONTINUED

Important Notice

All statements, technical information, and recommendations related to 3M's products are based on information believed to be reliable, but the accuracy or completeness is not guaranteed. Before using this product, you must evaluate it and determine if it is suitable for your intended application. You assume all risks and liability associated with such use. Any statements related to the product which are not contained in 3M's current publications, or any contrary statements contained on your purchase order shall have no force or effect unless expressly agreed upon, in writing, by an authorized officer of 3M.

Warranty; Limited Remedy; Limited Liability.

This product will be free from defects in material and manufacture for a period of one (1) year from the time of purchase. **3M MAKES NO OTHER WARRANTIES INCLUDING, BUT NOT LIMITED TO, ANY IMPLIED WARRANTY OF MERCHANTABILITY OR FITNESS FOR A PARTICULAR PURPOSE.** If this product is defective within the warranty period stated above, your exclusive remedy shall be, at 3M's option, to replace or repair the 3M product or refund the purchase price of the 3M product. **Except where prohibited by law, 3M will not be liable for any indirect, special, incidental or consequential loss or damage arising from this 3M product, regardless of the legal theory asserted.**

3M Electronic Solutions Division
6801 River Place Blvd.
Austin, TX 78726-9000
U.S.A.
1-800-225-5373
www.3m.com/interconnects

Please recycle. Printed in USA.
© 3M 2008. All rights reserved.
RIA-2217B-D

3M is a trademark of 3M Company.

Общество с ограниченной ответственностью «МосЧип» ИНН 7719860671 / КПП 771901001
Адрес: 105318, г.Москва, ул.Щербаковская д.3, офис 1107

Данный компонент на территории Российской Федерации

Вы можете приобрести в компании MosChip.

Для оперативного оформления запроса Вам необходимо перейти по данной ссылке:

http://moschip.ru/get-element

Вы можете разместить у нас заказ для любого Вашего проекта, будь то серийное производство или разработка единичного прибора.

В нашем ассортименте представлены ведущие мировые производители активных и пассивных электронных компонентов.

Нашей специализацией является поставка электронной компонентной базы двойного назначения, продукции таких производителей как XILINX, Intel (ex.ALTERA), Vicor, Microchip, Texas Instruments, Analog Devices, Mini-Circuits, Amphenol, Glenair.

Сотрудничество с глобальными дистрибьюторами электронных компонентов, предоставляет возможность заказывать и получать с международных складов практически любой перечень компонентов в оптимальные для Вас сроки.

На всех этапах разработки и производства наши партнеры могут получить квалифицированную поддержку опытных инженеров.

Система менеджмента качества компании отвечает требованиям в соответствии с ГОСТ Р ИСО 9001, ГОСТ РВ 0015-002 и ЭС РД 009

Офис по работе с юридическими лицами:

105318, г.Москва, ул.Щербаковская д.3, офис 1107, 1118, ДЦ «Щербаковский»

Телефон: +7 495 668-12-70 (многоканальный)

Факс: +7 495 668-12-70 (доб.304)

E-mail: info@moschip.ru

Skype отдела продаж:
moschip.ru
moschip.ru_4
moschip.ru_6
moschip.ru_9