ATSAMW25-MR210PA

IEEE 802.11 b/g/n SmartConnect Wi-Fi Module

PRELIMINARY DATASHEET

Description

The Atmel® | SMART SAMW25 module is based on the industry-leading low-power 2.4GHz IEEE® 802.11 b/g/n Wi-Fi ATWINC1500 SoC (System on Chip) combined with the ARM® Cortex®-M0+ based microcontroller technology from Atmel.

This turnkey system provides an integrated software solution with application and security protocols such as TLS, integrated network services (TCP/IP stack) which are all available through Atmel Studio 6 integrated development environment (IDE).The Atmel SmartConnect modules offer the ideal solutions for designers seeking to add Wi-Fi connectivity with minimal previous experience in 802.11, IP Stack or RF. Atmel SmartConnect Wi-Fi from Atmel opens the door of the Internet of Things (IoT) to the vast array of battery-powered devices and applications requiring the integration of WLAN connectivity without compromising on cost or power consumption. While we compete with other Wi-Fi modules on size, RF performance, cost and other characteristics, our Atmel SmartConnect product family has a distinctive advantage when it comes to power consumption and power saving modes. The ATSAMW25 device is a standalone end point, where a complete small application can be executed on the module by itself.

Features

Key features with SAMW25 Wireless connectivity solution:

- Certified Wi-Fi ATWINC1500A-MU-T with SAMD21 application
- IEEE 802.11 b/g/n 20MHz (1x1) solution
- Single spatial stream in 2.4GHz ISM band
- Compact footprint: 33.863 x 14.882mm
- Radio:
  - Output power - 802.11b /11Mbps: 17dBm ±1dB
  - 802.11g /54Mbps: 15dBm ±1dB @ EVM -28dB
  - 802.11n /65Mbps: 13dBm ±1dB @ EVM -30dB
- Application processor:
  - Atmel SAMD21 ARM Cortex M0+ based microcontroller
  - 256KB embedded Flash and 32KB SRAM
  - Full-Speed USB Device and embedded Host

- CryptoAuthentication™ ATECC508 (optional) I/O operating voltage: 2.7 to 3.6V
- Power Amplifier and On-board Switching Regulator operating voltage: 2.7 to 4.6V
- Power states supported:
  - Provision (AP/ Sniffer) IDLE LISTEN
  - IDLE
  - SUSPEND
- Extreme low power, on-chip low power sleep oscillator
- Serial Host Interface SPI or UART
- Software Upgrade Over-the-Air (OTA)
- FCC, CE, IC, and TELEC Certified; RoHS compliant
- Security protocols; WPA/WPA2 Personal, TLS, SSL
- Network services; DHCP, DNS, TCP/IP (IPv4), UDP, HTTP, HTTPS

Target Applications

- IoT applications
- Smart appliances
- Multimedia streaming
- Safety and security
- Home automation
- Consumer electronics
- Industrial automation

Table of Contents

1 Block Diagram 4

2 Ordering Information and IC Marking 4

3 Pinout and Package Information 5

3.1 Pin Description 5
3.2 Package Description 9

4 Electrical Specifications 10

4.1 Absolute Ratings 10
4.2 Recommended Operating Conditions 11
4.3 DC Electrical Characteristics 11

5 Application and Core Subsystems 12

5.1 Host Processor 12
5.1.1 Host MCU Description 12
5.1.2 Host MCU Key Features 12
5.2 Wi-Fi Core Processor 12
5.2.1 Memory Subsystem 13
5.2.2 Non-Volatile Memory (eFuse) 13

6 WLAN Subsystem 14

6.1 MAC 14
6.1.1 Features 14
6.1.2 Description 14
6.2 PHY 15
6.2.1 Features 15
6.2.2 Description 15
6.3 Radio 15
6.3.1 Receiver Performance 15
6.3.2 Transmitter Performance 16

7 Recommended Reflow Profile 17

8 Reference Design 18

9 Bill of Materials (BOM) 19

10 Application Schematics 20

11 Design Guidelines 21

12 Reference Documentation and Support 22

12.1 Reference Documents 22
12.2 Related Documents 22

13 Revision History 23

1 Block Diagram

Figure 1-1. ATSAMW25 Block Diagram

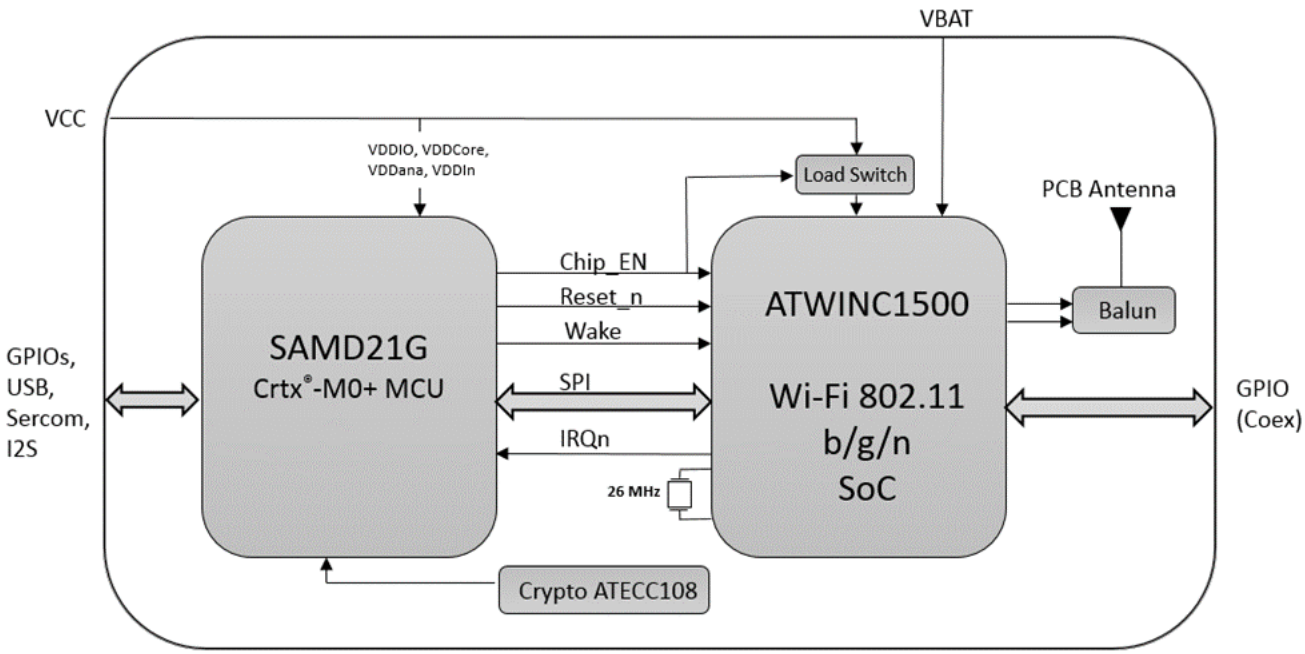

2 Ordering Information and IC Marking

Table 2-1. Ordering Details

Atmel Ordering Code	Package
ATSAMW25-MR210PA	WINC1500 + SAMD21 module. Tray Packing
ATSAMW25-MR510PA	WINC1500+SAMD21+ATECC508 module. Tray Packing
ATSAMW25-XPRO	Xplained board evaluation kit

3 Pinout and Package Information

3.1 Pin Description

Figure 3-1. Pin Assignment

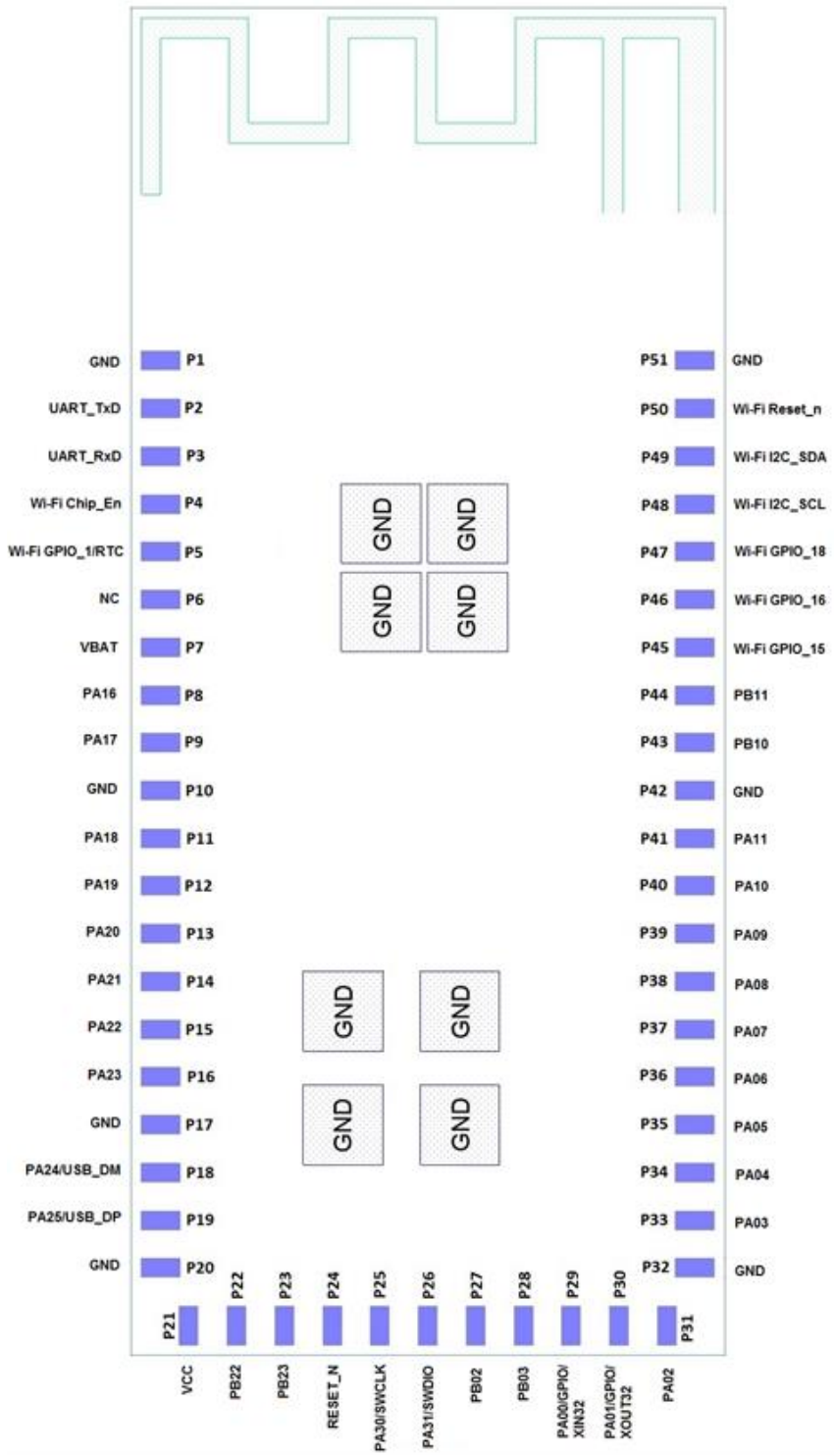

Table 3-1. Pin Description

Pin #	Pin Description	I/O Type	Function (default)	Programmable Pullup/-down Resistor
1	GND	N/A	Common Ground	
2	UART_TxD	WINC1500 Output	Currently used only for Atmel debug. Not for customer use. Leave unconnected.	Yes – Pullup
3	UART_RxD	WINC1500 Input	Currently used only for Atmel debug. Not for customer use. Leave unconnected.	Yes – Pullup
4	Wi-Fi Chip_En	WINC1500 Input	Currently used only for Atmel debug. Not for customer use. Leave unconnected.	No
5	Wi-Fi GPIO_1/RTC	WINC1500 I/O	ATWINC1500 General purpose I/O. Can also be used to input a 32.768KHz Real Time Clock for accurate timing of Wi-Fi sleep intervals	Yes – Pullup
6	NC	-	No connect	
7	VBAT	Power	Supply for Wi-Fi RF Power Amplifier and Internal 1.3V Switching Regulator	
8	PA16	See SAM D21G datasheet	See SAM D21G datasheet	Yes
9	PA17	See SAM D21G datasheet	See SAM D21G datasheet	Yes
10	GND	Power	Ground	
11	PA18	See SAM D21G datasheet	See SAM D21G datasheet	Yes
12	PA19	See SAM D21G datasheet	See SAM D21G datasheet	Yes
13	PA20	See SAM D21G datasheet	See SAM D21G datasheet	Yes
14	PA21	See SAM D21G datasheet	See SAM D21G datasheet	Yes
15	PA22	See SAM D21G datasheet	See SAM D21G datasheet	Yes
16	PA23	See SAM D21G datasheet	See SAM D21G datasheet	Yes
17	GND	Power	Ground	
18	PA24/USB_DM	See SAM D21G datasheet	Host Interface USB Data minus pin	Yes
19	PA25/USB_DP	See SAM D21G datasheet	Host Interface USB Data Plus pin	Yes
20	GND	Power	Ground	
21	VCC	Power	Power supply for I/O	
22	PB22	See SAM D21G datasheet	See SAM D21G datasheet	Yes
23	PB23	See SAM D21G datasheet	See SAM D21G datasheet	Yes
24	RESET_N	Input see SAM D21G datasheet	System Reset. Low level on this pin resets the entire module.	Yes
25	PA30/SWCLK	See SAM D21G datasheet	Cortex Serial Wire Debug Interface CLK	Yes

Pin #	Pin Description	I/O Type	Function (default)	Programmable Pullup/-down Resistor
26	PA31/SWDIO	See SAM D21G datasheet	Cortex Serial Wire Debug Interface Data I/O	Yes
27	PB02	See SAM D21G datasheet	See SAM D21G datasheet	Yes
28	PB03	See SAM D21G datasheet	See SAM D21G datasheet	Yes
29	PA00/GPIO/XIN32	See SAM D21G datasheet	See SAM D21G datasheet	Yes
30	PA01/GPIO/XOUT32	See SAM D21G datasheet	See SAM D21G datasheet	Yes
31	PA02	I/O	See SAM D21G datasheet	Yes
32	GND	Power	Ground	Yes
33	PA03	See SAM D21G datasheet	See SAM D21G datasheet	Yes
34	PA04	See SAM D21G datasheet	See SAM D21G datasheet	Yes
35	PA05	See SAM D21G datasheet	See SAM D21G datasheet	Yes
36	PA06	See SAM D21G datasheet	See SAM D21G datasheet	Yes
37	PA07	See SAM D21G datasheet	See SAM D21G datasheet	Yes
38	PA08	See SAM D21G datasheet	See SAM D21G datasheet	Yes
39	PA09	See SAM D21G datasheet	See SAM D21G datasheet	Yes
40	PA10	See SAM D21G datasheet	See SAM D21G datasheet	Yes
41	PA11	See SAM D21G datasheet	See SAM D21G datasheet	Yes
42	GND	Power	Ground	
43	PB10	See SAM D21G datasheet	See SAM D21G datasheet	Yes
44	PB11	See SAM D21G datasheet	See SAM D21G datasheet	Yes
45	Wi-Fi GPIO_15	WINC1500 I/O	ATWINC1500 General purpose I/O. Pin must not be driven or pulled high when the ATWINC1500 is in Suspend Mode.	Yes – Pullup
46	Wi-Fi GPIO_16	WINC1500 I/O	ATWINC1500 General purpose I/O. Pin must not be driven or pulled high when the ATWINC1500 is in Suspend Mode.	Yes – Pullup
47	Wi-Fi GPIO_18	WINC1500 I/O	ATWINC1500 General purpose I/O. Pin must not be driven or pulled high when the ATWINC1500 is in Suspend Mode.	Yes – Pullup
48	Wi-Fi I2C_SCL	WINC1500 I/O	Currently used only for Atmel de-bug. Not for customer use. Leave unconnected.	Yes – Pullup
49	Wi-Fi I2C_SDA	WINC1500 I/O	Currently used only for Atmel de-bug. Not for customer use. Leave unconnected.	Yes – Pullup

Pin #	Pin Description	I/O Type	Function (default)	Programmable Pullup/-down Resistor
50	Wi-Fi Reset_n	WINC1500 Input	Currently used only for Atmel de-bug. Not for customer use. Leave unconnected.	No
51	GND	Power	Ground	

3.2 Package Description

The ATSAMW25-MR210PA package information.

Figure 3-2. SAMW25 MR210PA Package

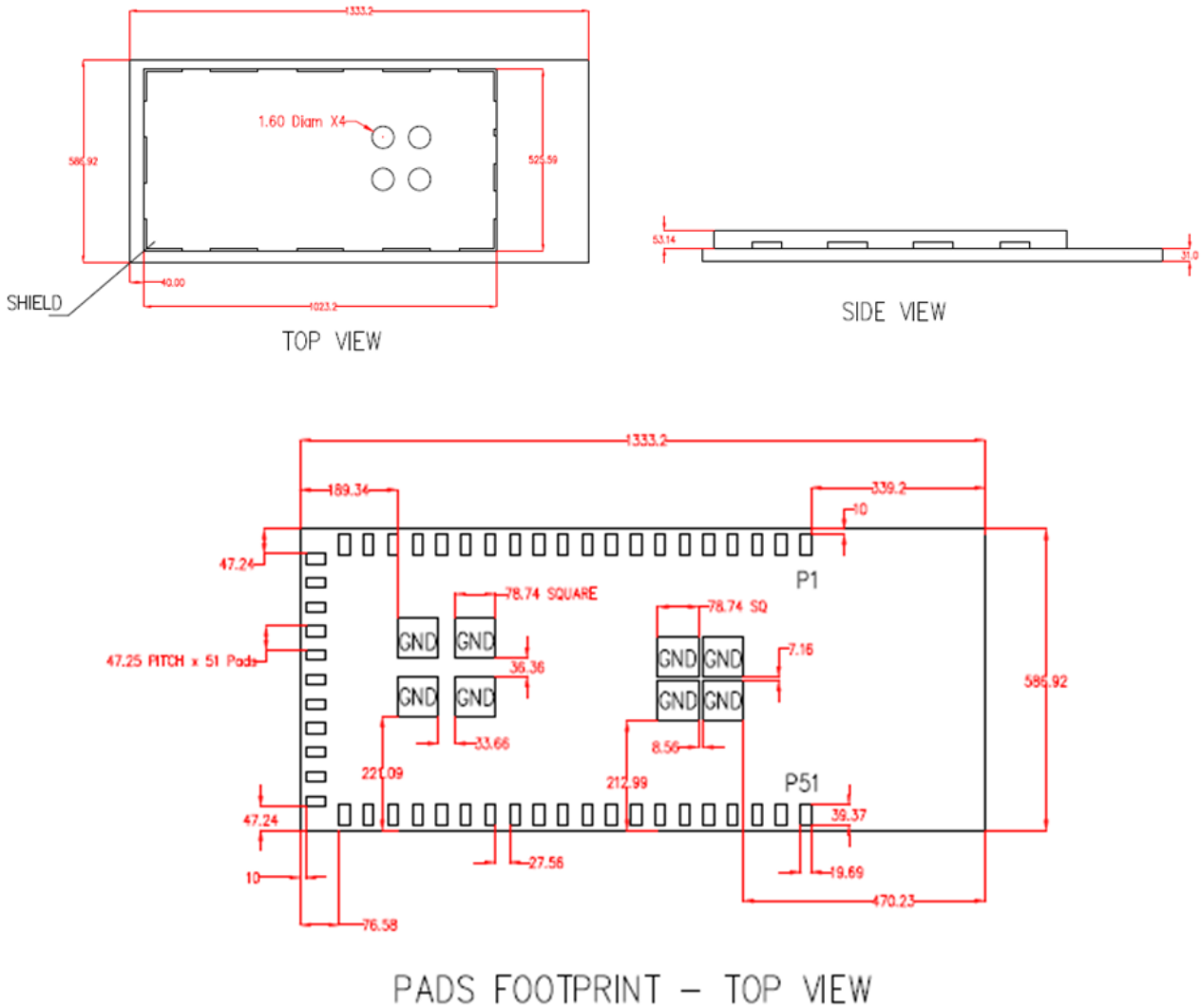

4 Electrical Specifications

4.1 Absolute Ratings

All typical values are measured at T = 25°C unless otherwise specified. All minimum and maximum values are valid across operating temperature and voltage unless otherwise specified.

Table 4-1. Absolute Maximum Ratings

Parameters	Minimum	Maximum	Unit
VBAT power supply voltage	0	5.0	V
VCC power supply voltage	0	3.63	
Pin voltage with respect to GND and VCC	GND-0.3	VCC+0.3	
Storage temperature range	-40	+125	°C

Table 4-2. General Operating Ratings

Parameters	Minimum	Typical	Maximum	Unit
VBATT	2.7	3.30	4.2	°C
VCC	1.62	3.30	3.6	
Operating temperature range	-40	25	85	

Table 4-3. Physical Characteristics

Parameters	Value	Comments
Size	33.863 x 14.882mm	-
Connector pins pitch	see module footprint	-

Table 4-4. I/O Pins Characteristics

VDDIO Condition	Characteristic	Minimum	Typical	Maximum	Unit
$VDDIO_L$	Input Low Voltage V_{IL}	-0.30		0.60	V
	Input High Voltage V_{IH}	VDDIO-0.60		VDDIO+0.30	
	Output Low Voltage V_{OL}			0.45	
	Output High Voltage V_{OH}	VDDIO-0.50			
$VDDIO_M$	Input Low Voltage V_{IL}	-0.30		0.63	
	Input High Voltage V_{IH}	VDDIO-0.60		VDDIO+0.30	
	Output Low Voltage V_{OL}			0.45	
	Output High Voltage V_{OH}	VDDIO-0.50			
$VDDIO_H$	Input Low Voltage V_{IL}	-0.30		0.65	
	Input High Voltage V_{IH}	VDDIO-0.60		VDDIO+0.30 (up to 3.60)	

VDDIO Condition	Characteristic	Minimum	Typical	Maximum	Unit
	Output Low Voltage V_{OL}			0.45	V
	Output High Voltage V_{OH}	VDDIO-0.50			
All	Output Loading			20	pF
All	Digital Input Load			6	
Pull-up resistor		76K	90K	104K	ohms

I/O pin characteristics for pins 5, 45, 46, 47 (for all other I/O, see the SAM D21G datasheet).

4.2 Recommended Operating Conditions

Table 4-5. Recommended Operating Conditions

Characteristic	Symbol	Minimum	Typical	Maximum	Unit
I/O supply voltage	VDDIO	2.7	3.3	3.6	V
Battery supply voltage	VBATT	3.0	3.6	4.2	
Operating temperature		-40		85	ºC

Notes: 1. I/O supply voltage is applied to the following pins: VDDIO_A, VDDIO.
2. Battery supply voltage is applied to following pins: VDD_BATT_PPA, VDD_BATT_PA, and VBATT_BUCK.

4.3 DC Electrical Characteristics

Table 4-6 provides the DC characteristics for the ATSAMW25 digital pads.

Table 4-6. DC Electrical Characteristics

VDDIO Condition	Characteristic	Minimum	Maximum	Unit
$VDDIO_L$	Input Low Voltage V_{IL}	-0.30	0.60	V
	Input High Voltage V_{IH}	VDDIO-0.60	VDDIO+0.30	
	Output Low Voltage V_{OL}		0.45	
	Output High Voltage V_{OH}	VDDIO-0.50		
$VDDIO_M$	Input Low Voltage V_{IL}	-0.30	0.63	
	Input High Voltage V_{IH}	VDDIO-0.60	VDDIO+0.30	
	Output Low Voltage V_{OL}		0.45	
	Output High Voltage V_{OH}	VDDIO-0.50		
$VDDIO_H$	Input Low Voltage V_{IL}	-0.30	0.65	
	Input High Voltage V_{IH}	VDDIO-0.60	VDDIO+0.30 (up to 3.60)	
	Output Low Voltage V_{OL}		0.45	
	Output High Voltage V_{OH}	VDDIO-0.50		
All	Output Loading		20	pF
All	Digital Input Load		6	

5 Application and Core Subsystems

5.1 Host Processor

The Atmel | SMART SAM D ARM Cortex-M0+ based microcontroller (MCU) series builds on decades of innovation and experience in embedded Flash microcontroller technology. It not only sets a new benchmark for flexibility and ease-of-use but also combines the performance and energy efficiency of an ARM Cortex-M0+ based MCU with an optimized architecture and peripheral set. The Atmel | SMART SAM D gives you a truly differentiated general-purpose microcontroller that is ideal for many low-power, cost-sensitive industrial and consumer applications.

5.1.1 Host MCU Description

A rich set of peripherals, flexibility and ease-of-use combined with low power consumption make the Atmel SAM D21 ideal for a wide range of home automation, consumer, metering, and industrial applications.

- ARM Cortex-M0+ based MCU running up to 48MHz
- 256KB embedded Flash and 32KB SRAM
- DMA and Event system
- Six flexible serial communication modules (SERCOM)
- Full-Speed USB Device and embedded Host
- 12-bit ADC (SAM D21G: 14 channels); 10-bit DAC
- Hardware touch support

5.1.2 Host MCU Key Features

- Low power consumption, down to 70µA/MHz
- Enhanced Analog Performance
  - ADC with offset and gain correction
  - Averaging, oversampling, and decimation
  - Flexible DAC
  - New low power internal oscillators
  - ±2% accuracy over operating range
- Digital Innovations
  - Programmable Event System
  - Enhanced TC for Control Applications
  - Programmable SERCOM module
  - I^2C / SPI / USART / LIN2 / IrDA
  - Full Speed USB Device and Host
  - No external components needed
  - 6-12 channel DMA with CRC module
  - PTC Hardware touch module
  - I^2S module with PDM support

5.2 Wi-Fi Core Processor

ATWINC1500A has a Cortus APS3 32-bit processor. This processor performs many of the MAC functions, including but not limited to association, authentication, power management, security key management, and MSDU aggregation/de-aggregation. In addition, the processor provides flexibility for various modes of operation, such as STA and AP modes.

5.2.1 Memory Subsystem

The APS3 core uses a 128KB instruction/boot ROM along with a 128KB instruction RAM and a 64KB data RAM. ATWINC1500A also has 4Mb of flash memory, which can be used for system software. In addition, the device uses a 128KB shared RAM, accessible by the processor and MAC, which allows the APS3 core to perform various data management tasks on the TX and RX data packets.

5.2.2 Non-Volatile Memory (eFuse)

ATWINC1500A has 768 bits of non-volatile eFuse memory that can be read by the CPU after device reset. This non-volatile one-time-programmable (OTP) memory can be used to store customer-specific parameters, such as MAC address; various calibration information, such as TX power, crystal frequency offset, etc.; and other software-specific configuration parameters. The eFuse is partitioned into six 128-bit banks. Each bank has the same bit map, which is shown in Figure 5-1. The purpose of the first 80 bits in each bank is fixed, and the remaining 48 bits are general-purpose software dependent bits, or reserved for future use. Since each bank can be programmed independently, this allows for several updates of the device parameters following the initial programming, e.g. updating MAC address. Refer to ATWINC1500A Programming Guide for the eFuse programming instructions.

Figure 5-1. eFuse Bit Map

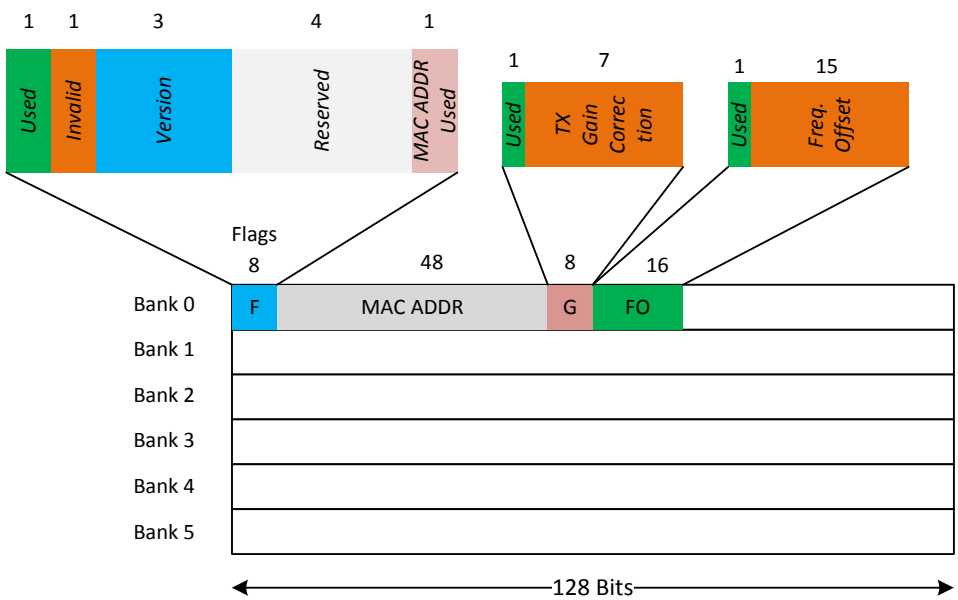

6 WLAN Subsystem

The WLAN subsystem is composed of the Media Access Controller (MAC) and the Physical Layer (PHY). The following two subsections describe the MAC and PHY in detail.

6.1 MAC

6.1.1 Features

The ATWINC1500A IEEE802.11 MAC supports the following functions:

- IEEE 802.11b/g/n
- IEEE 802.11e WMM QoS EDCA/PCF multiple access categories traffic scheduling
- Advanced IEEE 802.11n features:
  - Transmission and reception of aggregated MPDUs (A-MPDU)
  - Transmission and reception of aggregated MSDUs (A-MSDU)
  - Immediate Block Acknowledgement
  - Reduced Interframe Spacing (RIFS)
- Support for IEEE802.11i and WFA security with key management
  - WEP 64/128
  - WPA-TKIP
  - 128-bit WPA2 CCMP (AES)
- Support for WAPI security
- Advanced power management
  - Standard 802.11 Power Save Mode
  - Wi-Fi Alliance WMM-PS (U-APSD)
- RTS-CTS and CTS-self support
- Supports either STA or AP mode in the infrastructure basic service set mode
- Supports independent basic service set (IBSS)

6.1.2 Description

The ATWINC1500A MAC is designed to operate at low power while providing high data throughput. The IEEE 802.11 MAC functions are implemented with a combination of dedicated data path engines, hardwired control logic, and a low-power, high-efficiency microprocessor. The combination of dedicated logic with a programmable processor provides optimal power efficiency and real-time response while providing the flexibility to accommodate evolving standards and future feature enhancements. Dedicated data path engines are used to implement data path functions with heavy computational. For example, an FCS engine checks the CRC of the transmitting and receiving packets, and a cipher engine performs all the required encryption and decryption operations for the WEP, WPA-TKIP, WPA2 CCMP-AES, and WAPI security requirements. Control functions which have real-time requirements are implemented using hardwired control logic modules. These logic modules offer real-time response while maintaining configurability via the processor. Examples of hardwired control logic modules are the channel access control module (implements EDCA/HCCA, Beacon TX control, interframe spacing, etc.), protocol timer module (responsible for the Network Access Vector, back-off timing, timing synchronization function, and slot management), MPDU handling module, aggregation/de-aggregation module, block ACK controller (implements the protocol requirements for burst block communication), and TX/RX control FSMs (coordinate data movement between PHY-MAC interface, cipher engine, and the DMA interface to the TX/RX FIFOs).

The MAC functions implemented solely in software on the microprocessor have the following characteristics:

- Functions with high memory requirements or complex data structures. Examples are association table management and power save queuing.
- Functions with low computational load or without critical real-time requirements. Examples are authentication and association.
- Functions which need flexibility and upgradeability. Examples are beacon frame processing and QoS scheduling.

6.2 PHY

6.2.1 Features

The ATWINC1500A IEEE802.11 PHY supports the following functions:

- Single antenna 1x1 stream in 20MHz channels
- Supports IEEE 802.11b DSSS-CCK modulation: 1, 2, 5.5, 11Mbps
- Supports IEEE 802.11g OFDM modulation: 6, 9, 12,18, 24, 36, 48, 54Mbps
- Supports IEEE 802.11n HT modulations MCS0-7, 20MHz, 800 and 400ns guard interval: 6.5, 7.2, 13.0, 14.4, 19.5, 21.7, 26.0, 28.9, 39.0, 43.3, 52.0, 57.8, 58.5, 65.0, 72.2Mbps
- IEEE 802.11n mixed mode operation
- Per packet TX power control
- Advanced channel estimation/equalization, automatic gain control, CCA, carrier/symbol recovery, and frame detection

6.2.2 Description

The ATWINC1500A WLAN PHY is designed to achieve reliable and power-efficient physical layer communication specified by IEEE 802.11 b/g/n in single stream mode with 20MHz bandwidth. Advanced algorithms have been employed to achieve maximum throughput in a real world communication environment with impairments and interference. The PHY implements all the required functions such as FFT, filtering, FEC (Viterbi decoder), frequency and timing acquisition and tracking, channel estimation and equalization, carrier sensing, and clear channel assessment, as well as the automatic gain control.

6.3 Radio

6.3.1 Receiver Performance

Radio Performance under Typical Conditions: VBAT=3.3V; VDDIO=3.3V; Temp.: 25°C @ RF pins

Table 6-1. Receiver Performance

Parameter	Description	Minimum	Typical (1)	Maximum	Unit
Frequency		2,412		2,484	MHz
Sensitivity 802.11b	1Mbps DSS		-95.5		dBm
	2Mbps DSS		-93.5		
	5.5Mbps DSS		-91		
	11Mbps DSS		-87		

Parameter	Description	Minimum	Typical (1)	Maximum	Unit
Sensitivity 802.11g	6Mbps OFDM		-89		dBm
	9Mbps OFDM		-87.5		
	12Mbps OFDM		-86.5		
	18Mbps OFDM		-84.5		
	24Mbps OFDM		-81.5		
	36Mbps OFDM		-78		
	48Mbps OFDM		-74		
	54Mbps OFDM		-72		
Sensitivity 802.11n (BW=20MHz)	MCS 0		-87.5		dBm
	MCS 1		-85		
	MCS 2		-82		
	MCS 3		-79.5		
	MCS 4		-75.5		
	MCS 5		-72		
	MCS 6		-70		
	MCS 7		-68.5		

Note: 1. Measured at RF pin assuming 50Ω differential; RF performance guaranteed for temperature range -30 to 85ºC. 1dB derating in performance at -40ºC.

6.3.2 Transmitter Performance

Radio Performance under Typical Conditions: VBAT=3.3V; VDDIO=3.3V; Temp.: 25°C @ RF pins

Table 6-2. Transmitter Performance

Parameter	Description	Minimum	Typical (1)	Maximum	Unit
Frequency		2,412		2,484	MHz
Output power	802.11b / 11Mbps		17		dBm
	802.11g / 54Mbps		15@EVM -28dB		
	802.11n / 65Mbps		13@EVM -30dB		

Note: 1. Measured at 802.11 spec compliant EVM / Spectral Mask; Measured at RF pin assuming 50Ω differential RF performance guaranteed for temperature range -30 to 85ºC. 1dB derating in performance at -40ºC.

7 Recommended Reflow Profile

Setpoints (Celsius)

Zone	1	2	3	4	5	6	7	8	9
Top	200	140	160	180	180	210	220	265	265
Bottom	200	140	160	180	180	210	220	265	265

Conveyor Speed (cm/min): 65.0

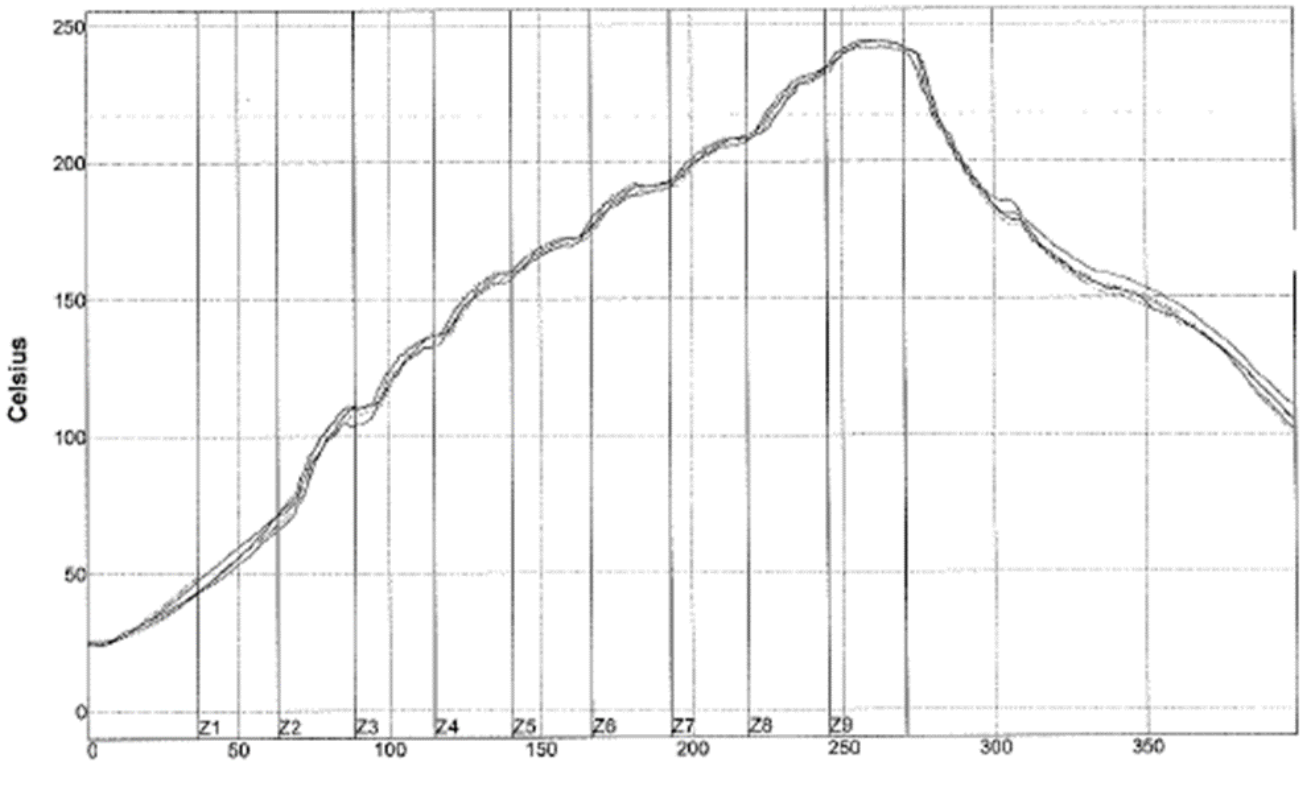

PWI= 64%	Max Rising Slope		Max Falling Slope		Soak Time 150-200C		Reflow Time /217C		Peak Temp	
<TC2>	1.17	-41%	-3.92	-30%	74.60	-51%	54.87	-56%	242.73	-23%
<TC3>	1.19	-40%	-2.68	13%	75.03	-50%	54.99	-56%	241.73	-31%
<TC4>	1.18	-41%	-4.09	-35%	74.83	-51%	54.90	-56%	244.28	-12%
<TC5>	1.19	-40%	-3.63	-20%	73.47	-55%	53.11	-64%	244.22	-13%
<TC6>	1.17	-41%	-4.04	-34%	73.63	-55%	55.09	-55%	243.92	-15%
Delta	0.02		1.41		1.56		1.98		2.55	

Process Window:

Solder Paste: RoHS

Statistic Name	Low Limit	High Limit	Units
Max Rising Slope (Target=2.0) (Calculate Slope over 90 Seconds)	0	3	Degrees/Second
Max Falling Slope (Calculate Slope over 6 Seconds)	-6	-0.1	Degrees/Second
Soak Time 150-200C	60	120	Seconds
Time Above Reflow - 217C	45	90	Seconds
Peak Temperature	232	260	Degrees Celsius

8 Reference Design

The ATSAMW25-MR210PA reference design schematic is shown in Figure 8-1.

Figure 8-1. ATSAMW25-MR210PA Reference Schematic

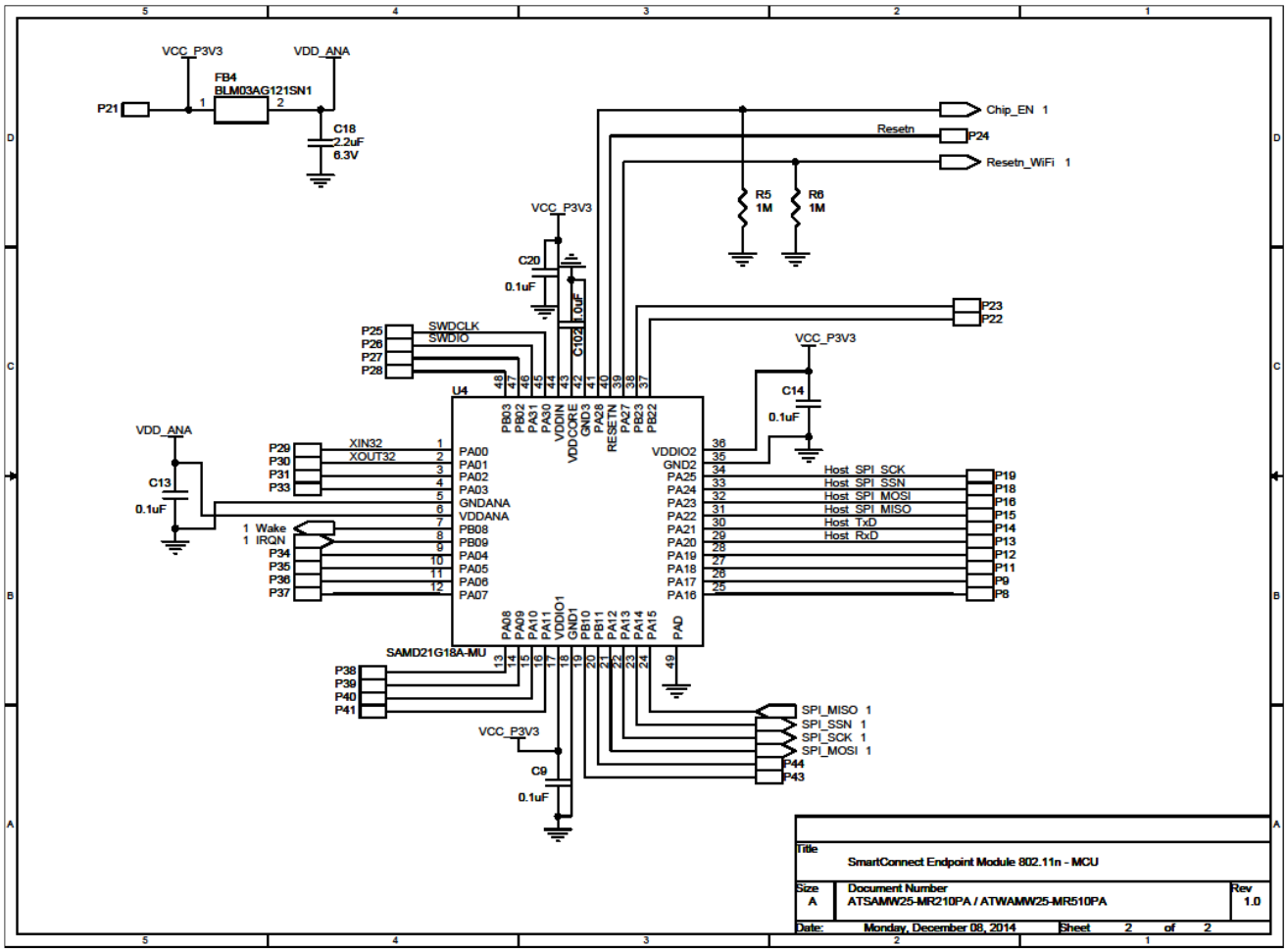

9 Bill of Materials (BOM)

Item	Qty.	Reference	Value	Description	Manufacturer	Part Number	Footprint
1	1	A1	Antenna	Antenna, printed circuit, inverted F		Non component	PCB F
2	1	C1	0.01µF	CAP,CER,0.01µF,10%,XSR,0201,10V,-55-125ºC	Murata	GRM033R61A103KA01D	CS0201
3	13	C2,C4,C5,C6,C8,C9,C11,C12,C13,C14,C19,C20,C25	0.1µF	CAP,CER,0.1µF,10%,XSR,0201,6.3V,-55-125ºC	Murata	GRM033R60J104KE19D	CS0201
4	3	C3,C10,C18	2.2µF	CAP,CER,2.2µF,10%,XSR,0402,6.3V,-55-85ºC	TDK	C1005XSR0J225K	CS0402
5	1	C7	1.0µF	CAP,CER,1.0µF,10%,XSR,0402,6.3V,-55-85ºC	GRM155R60J10SKE19D	GRM155R60J10SKE19D	CS0402
6	2	C15,C16	5.6pF	CAP,CER,5.6pF,0.5pF,NPO,0201,25V,-55-125ºC	Murata	GRM0335C2A5R6DA01D	CS0201
7	2	C17,C32	1.0pF	CAP,CER,1.0pF,0.1pF,NPO,0201,25V,-55-125ºC	Murata	GRM0335C1E1R0BA01J	RS0201
8	1	C21	DNI	CAP,CER,1.0pF,0.1pF,NPO,0201,25V,-55-125ºC	Murata	GRM0335C1E1R0BA01J	RS0201
9	1	C22	DNI	CAP,CER,0.5pF,0.1pF,NPO,0201,25V,-55-125ºC	Murata	500RGRM0335C1ER50BA0	RS0201
10	2	C23,C24	6.8pF	CAP,CER,6.8pF,0.5pF,NPO,0201,25V,-55-125ºC	TDK	C0603C0G1E6R8D030BA	RS0201
11	1	C33	0.7pF	CAP,CER,0.7pF,0.05pF,NPO,0201,25V,-55-125ºC	TDK	C0603C0G1E0R7W030BF	RS0201
12	2	C34,C35	DNI	CAP,CER,0.5pF,0.1pF,NPO,0201,25V,-55-125ºC	Murata	500RGRM0335C1ER50BA0 1D0750R5AV4T	RS0201
13	1	C102	1.0µF	CAP,CER,1.0µF,20%,XSR,0402,6.3V	Panasonic	ECJ-0EB0J105M	CS0402
14	4	FB1,FB2,FB3,FB4	BLM03AG121SN1	FERRITE,120Ω@100MHz,200mA,0201,-55-125ºC	Murata	BLM03AG121SN1	FB50201
15	1	L1	1µH	Power inductor,1µH,20%,940mA, 0.125Ω,0603,shielded,-40-85ºC	Murata	LQM18PN1R0MFRL	LS0603
16	1	L5	15nH	Inductor,multilayer,15nH,5%, 350mA,Q=8@100MHz,0402	Murata	LQG15HS15NJ02D	LS0402
17	2	L8,L9	3.3nH	Inductor,3.3nH,0.2nH,Q=13@500MHz, SRF=8.1GHz,0201,-55-125ºC	Taiyo Yuden	HKQ0603S3N3C-T	LS0201
18	51	P1,P2,P3,P4,P5,P6,P7,P8, P9,P10,P11,P12,P13,P14, P15,P16,P17,P18,P19,P20, P21,P22,P23,P24,P25,P26, P27,P28,P29,P30,P31,P32, P33,P34,P35,P36,P37,P38, P39,P40,P41,P42,P43,P44, P45,P46,P47,P48,P49,P50, P51	PAD 0.7X1.2	LGA module pad, 0.7mm x 1.2mm		Non component	PAD 0.7x1.2mm
19	1	R1	2.0nH	Inductor,2.0nH,0.2nH,Q=13@500MHz, SRF=8.1GHz,0201,-55-125ºC	Taiyo Yuden	HKQ0603S2N0C-T	RS0201
20	1	R2	0.5pF	CAP,CER,0.5pF,0.1pF,NPO,0201,25V,-55-125ºC	Murata	500RGRM0335C1ER50BA0	RS0201
21	1	R3	DNI	CAP,CER,0.5pF,0.1pF,NPO,0201,25V,-55-125ºC	Murata	500RGRM0335C1ER50BA0	RS0201
22	1	R4	1.2nH	Inductor,1.2nH,0.1nH,Q=14@500MHz, SRF=6GHz,0201,-55-125ºC	Murata	LQP03TN1N2B02D	RS0201
23	3	R5,R6,R7	1MΩ	Resistor, thick film,1MΩ,5%,0201	Vishay	CRCW0201-105J	RS0201
24	9	R8,R11,R12,R13,R14,R15, R16,R17,R18	0	Resistor, thick film,0Ω,0201	Panasonic	ERJ-1GN0R00C	RS0201
25	2	R9,R10	DNI	Resistor, thick film,0Ω,0201	Panasonic	ERJ-1GN0R00C	RS0201
26	2	R19,R20	4.7KΩ	Resistor, thick film,4.7kΩ,5%,0201	Vishay	CRCW0201-472J	RS0201
27	1	SH1	SHIELD	Shield			SHIELD_164
28	1	TP1	DNI	Test point, surface mount,0.030”sq.		Non component	TP_SMD-25SQ
29	1	U1	ATWINC1500	IC, Wi-Fi, 40QFN	Atmel	ATWINC1500	40QFN
30	1	U2	ATECC108A	IC, memory, CryptoAuthentication,8UDFN	Atmel	ATECC108A-MAHDA	BUDFN
31	1	U3	SI1865DDL	IC, load switch, 1.8V-12V in, RDSon=0.3Ω@2.5V,SC70-6	Vishay	SI1855DDL	SC70-6
32	1	U4	SAMD21G18A-MU	MCU	Atmel	SAMD21G18A-MU	48QFN
33	1	Y1	26MHz	XTAL,26MHz,CL=7.36pF,10ppm, -30-85ºC,ESR=50,3.2x2.5mm	NDK	NX3225SA-26.000000MHZ-G3	UM_ABM8

10 Application Schematics

Figure 10-1. Connections for the SAMW25

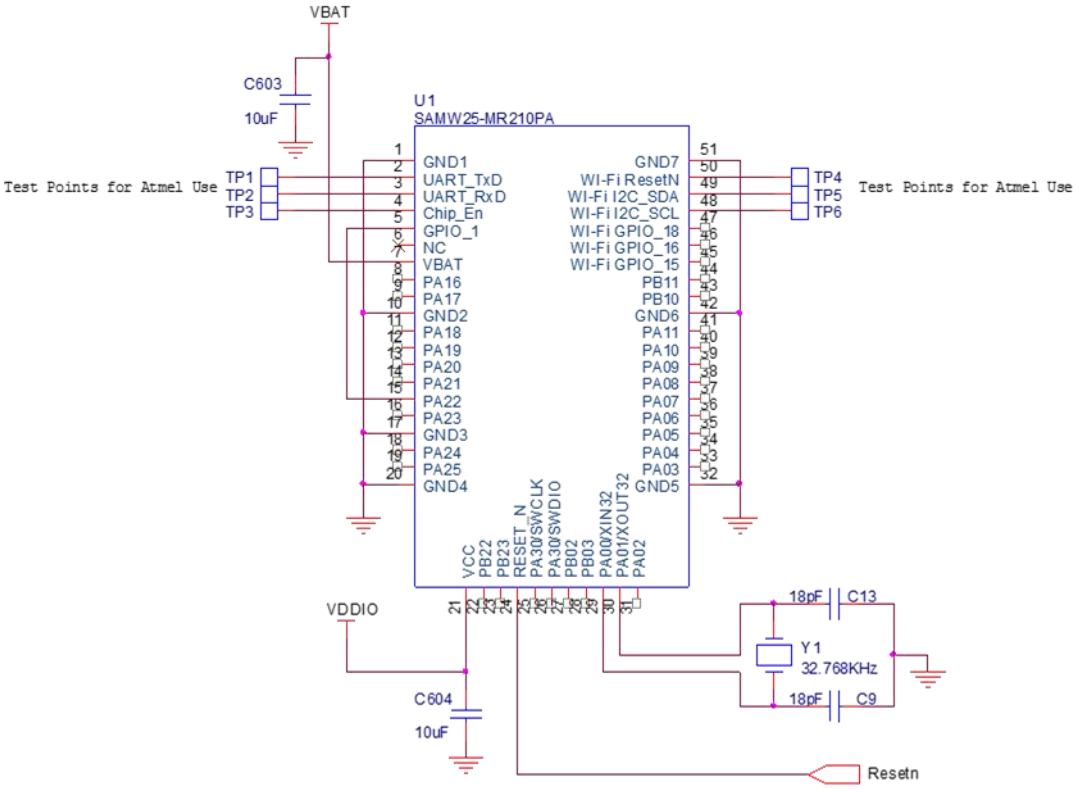

The basic power supply connections for the SAMW25 module are shown in Figure 10-1. The test points shown (TP1 – TP6) should be added in case Atmel is required to debug the design.

The Wi-Fi chip can use its own internal oscillator for a Real Time Clock (RTC) or it can use an external 32.768KHz clock provided on the RTC pin. Using an external clock derived from a crystal oscillator can be used as a more accurate sleep timer for the Wi-Fi chip than its own internal oscillator. This in turn can reduce sleep current. If power consumption during sleep is a priority then a 32.768KHz crystal can be added to the SAMD21 module as shown in the reference design. The design shown above displays a connection from pin 15 (PA22) to pin 5 (GPIO_1).

GPIO_1 is the input pin for the Wi-Fi's Real Time Clock. PA22 can be configured to output a 32.768KHz RTC clock – derived from the 32.768KHz crystal - to be used as the source for the Wi-Fi's RTC. If cost is a priority versus power consumption, then the 32.768KHz crystal can be left off of the design and the PA22 – GPIO_1 connection can be deleted.

11 Design Guidelines

It is critical to follow the recommendations listed below to achieve the best RF performance:

- When the module is placed on the motherboard, a provision for the antenna must be made. There should be nothing under the portion of the module which contains the antenna. This means the antenna should not be placed directly on top of the motherboard PCB. This can be accomplished by, for example, placing the module at the edge of the board such that the module edge with the antenna extends beyond the main board edge by 6.5mm. Alternatively, a cutout in the motherboard can be provided under the antenna. The cutout should be at least 22mm x 6.5mm. Ground vias spaced 2.5mm apart should be placed all around the perimeter of the cutout. No large components should be placed near the antenna.
- Keep away from antenna, as far as possible, large metal objects to avoid electromagnetic field blocking
- Do not enclose the antenna within a metal shield
- Keep any components which may radiate noise or signals within the 2.4 – 2.5GHz frequency band far away from the antenna or better yet, shield those components. Any noise radiated from the main board in this frequency band will degrade the sensitivity of the module.
- The main board should have a solid ground plane. Each ground pin of the module (including each of the center ground pads) should have a via placed either in the pad or right next to the pad going down to the ground plane.
- Place a 10µF decoupling capacitor from VBAT to ground right next to pin 7. Place another 10µF capacitor from VCC to ground right next to pin 21.
- Contact Atmel for assistance if any other placement is required

12 Reference Documentation and Support

12.1 Reference Documents

Atmel offers a set of collateral documentation to ease integration and device ramp.

The following list of documents available on Atmel web or integrated into development tools.

Table 12-1. Reference Documents

Title	Content
Datasheet	This document
Design Files	User Guide, Schematic, PCB layout, Gerber, BOM, and System notes on: RF/Radio Full Test Report, radiation pattern, design guidelines, temperature performance, ESD.
Package	How to use package: Out of the Box starting guide, HW limitations and notes, SW Quick start guidelines.
Platform Getting started Guide	Best practices and recommendations to design a board with the product, including: Antenna Design for Wi-Fi (layout recommendations, types of antennas, impedance matching, using a power amplifier etc.), SPI/UART protocol between Wi-Fi SoC and the Host MCU.
HW Design Guide	Integration guide with clear description of: High level Arch, overview on how to write a networking application, list all API, parameters and structures. Features of the device, SPI/handshake protocol between device and host MCU, with flow/sequence/state diagram, timing.
SW Design Guide	Explain in details the flow chart and how to use each API to implement all generic use cases (e.g. start AP, start STA, provisioning, UDP, TCP, http, TLS, p2p, errors management, connection/transfer recovery mechanism/state diagram) - usage and sample application note.

For a complete listing of development-support tools and documentation, visit http://www.atmel.com/ or contact the nearest Atmel field representative.

12.2 Related Documents

[1] ATSAMD21 Datasheet:
Web page: http://www.atmel.com/products/microcontrollers/arm/sam-d.aspx?tab=documents.
Document: Atmel SAM D21 Datasheet (.pdf file).
Then select the required device (ATSAMD21E18A) and get the latest datasheet (.pdf file).

[2] ATWINC1500 Datasheet.

[3] ATSAM W25 Network Controller Programming Guide.

[4] ATSAM W25 Starter Kit User Guide.

13 Revision History

Doc Rev.	Date	Comments
42395A	03/2015	Initial document release.

Atmel Corporation 1600 Technology Drive, San Jose, CA 95110 USA **T:** (+1)(408) 441.0311 **F:** (+1)(408) 436.4200 | **www.atmel.com**

© 2015 Atmel Corporation. / Rev.: Atmel-42395A-SmartConnect-ATSAMW25-MR210PA_Datasheet_032015.

Atmel®, Atmel logo and combinations thereof, Enabling Unlimited Possibilities®, and others are registered trademarks or trademarks of Atmel Corporation in U.S. and other countries. ARM®, ARM Connected® logo, and others are the registered trademarks or trademarks of ARM Ltd. Other terms and product names may be trademarks of others.

DISCLAIMER: The information in this document is provided in connection with Atmel products. No license, express or implied, by estoppel or otherwise, to any intellectual property right is granted by this document or in connection with the sale of Atmel products. EXCEPT AS SET FORTH IN THE ATMEL TERMS AND CONDITIONS OF SALES LOCATED ON THE ATMEL WEBSITE, ATMEL ASSUMES NO LIABILITY WHATSOEVER AND DISCLAIMS ANY EXPRESS, IMPLIED OR STATUTORY WARRANTY RELATING TO ITS PRODUCTS INCLUDING, BUT NOT LIMITED TO, THE IMPLIED WARRANTY OF MERCHANTABILITY, FITNESS FOR A PARTICULAR PURPOSE, OR NON-INFRINGEMENT. IN NO EVENT SHALL ATMEL BE LIABLE FOR ANY DIRECT, INDIRECT, CONSEQUENTIAL, PUNITIVE, SPECIAL OR INCIDENTAL DAMAGES (INCLUDING, WITHOUT LIMITATION, DAMAGES FOR LOSS AND PROFITS, BUSINESS INTERRUPTION, OR LOSS OF INFORMATION) ARISING OUT OF THE USE OR INABILITY TO USE THIS DOCUMENT, EVEN IF ATMEL HAS BEEN ADVISED OF THE POSSIBILITY OF SUCH DAMAGES. Atmel makes no representations or warranties with respect to the accuracy or completeness of the contents of this document and reserves the right to make changes to specifications and products descriptions at any time without notice. Atmel does not make any commitment to update the information contained herein. Unless specifically provided otherwise, Atmel products are not suitable for, and shall not be used in, automotive applications. Atmel products are not intended, authorized, or warranted for use as components in applications intended to support or sustain life.

SAFETY-CRITICAL, MILITARY, AND AUTOMOTIVE APPLICATIONS DISCLAIMER: Atmel products are not designed for and will not be used in connection with any applications where the failure of such products would reasonably be expected to result in significant personal injury or death (“Safety-Critical Applications”) without an Atmel officer's specific written consent. Safety-Critical Applications include, without limitation, life support devices and systems, equipment or systems for the operation of nuclear facilities and weapons systems. Atmel products are not designed nor intended for use in military or aerospace applications or environments unless specifically designated by Atmel as military-grade. Atmel products are not designed nor intended for use in automotive applications unless specifically designated by Atmel as automotive-grade.

Mouser Electronics

Authorized Distributor

Click to View Pricing, Inventory, Delivery & Lifecycle Information:

Atmel:

ATSAMW25H18-MR210PA ATSAMW25H18-MR510PB ATSAMW25H18-MR210PB

Общество с ограниченной ответственностью «МосЧип» ИНН 7719860671 / КПП 771901001
Адрес: 105318, г.Москва, ул.Щербаковская д.3, офис 1107

Данный компонент на территории Российской Федерации

Вы можете приобрести в компании MosChip.

Для оперативного оформления запроса Вам необходимо перейти по данной ссылке:

http://moschip.ru/get-element

Вы можете разместить у нас заказ для любого Вашего проекта, будь то серийное производство или разработка единичного прибора.

В нашем ассортименте представлены ведущие мировые производители активных и пассивных электронных компонентов.

Нашей специализацией является поставка электронной компонентной базы двойного назначения, продукции таких производителей как XILINX, Intel (ex.ALTERA), Vicor, Microchip, Texas Instruments, Analog Devices, Mini-Circuits, Amphenol, Glenair.

Сотрудничество с глобальными дистрибьюторами электронных компонентов, предоставляет возможность заказывать и получать с международных складов практически любой перечень компонентов в оптимальные для Вас сроки.

На всех этапах разработки и производства наши партнеры могут получить квалифицированную поддержку опытных инженеров.

Система менеджмента качества компании отвечает требованиям в соответствии с ГОСТ Р ИСО 9001, ГОСТ РВ 0015-002 и ЭС РД 009

Офис по работе с юридическими лицами:

105318, г.Москва, ул.Щербаковская д.3, офис 1107, 1118, ДЦ «Щербаковский»

Телефон: +7 495 668-12-70 (многоканальный)

Факс: +7 495 668-12-70 (доб.304)

E-mail: info@moschip.ru

Skype отдела продаж:
moschip.ru
moschip.ru_4
moschip.ru_6
moschip.ru_9