Amphenol® GT Series Reverse Bayonet Coupling Connectors

12-024-8

Ruggedized Connector Series for Rail/Mass Transit and other Harsh Environments

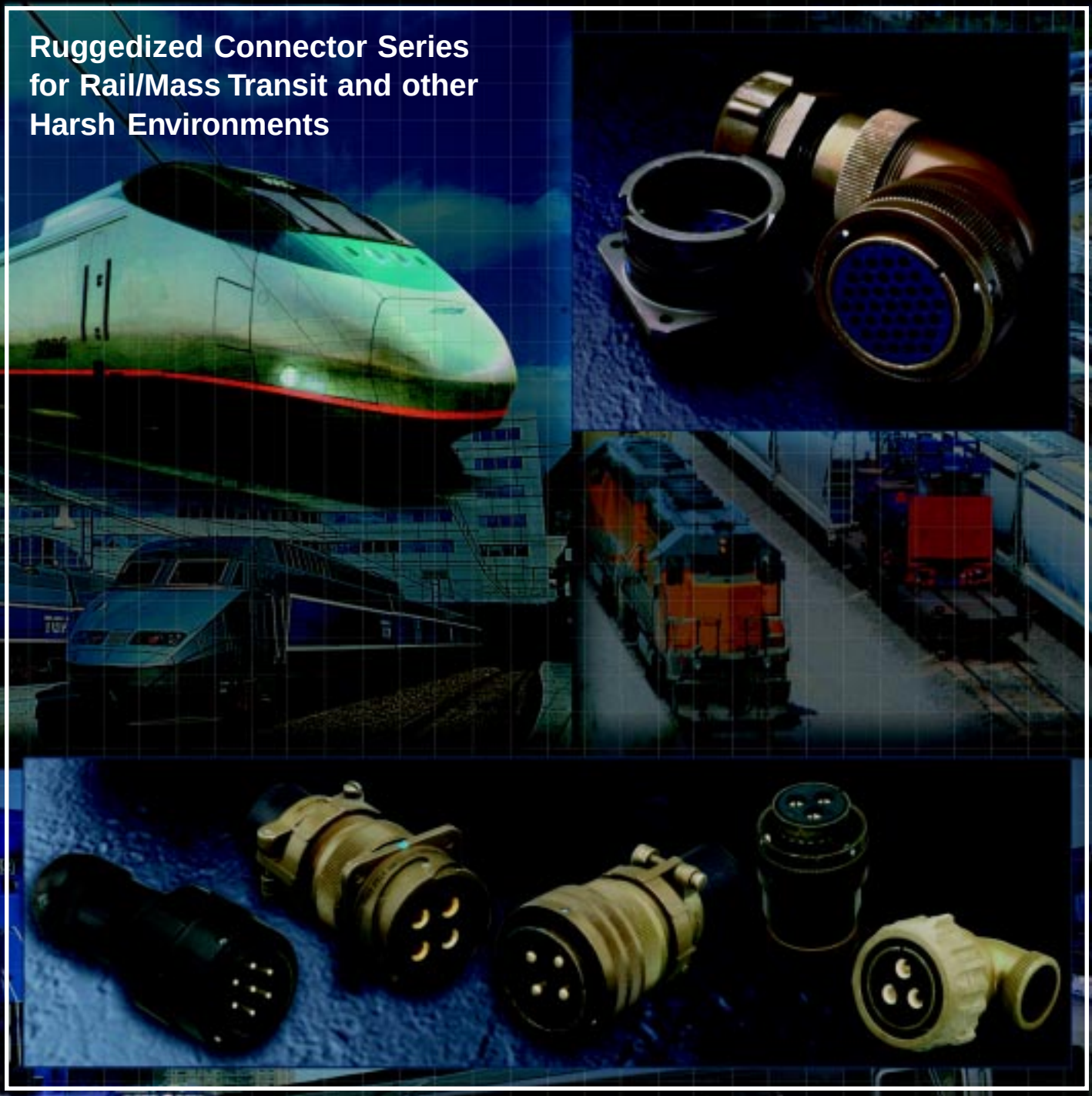

Amphenol

Table of Contents **Page No.**

Amphenol® GT Series Reversed Bayonet Coupling Connectors
General Description - - - 1
GT Series insert availability charts - - - 2-4
GT Series insert alternate positioning - - - 5
GT Series contact arrangements - - - 6-28
GT Connector Classes - - - 29
GT00A wall mount receptacle for front panel mounting - - - 30
GT00AF/00F wall mount receptacle for front panel mounting - - - 31
GT00CF/00CFZ wall mount receptacle for front panel mounting - - - 32
GT00G wall mount receptacle for front panel mounting - - - 33
GT00LCF/00LCFZ wall mount receptacle for front panel mounting - - - 34
GT00R wall mount receptacle for front panel mounting - - - 35
GT00RV wall mount receptacle for front panel mounting - - - 36
GT01A inline receptacle - - - 37
GT01AF/01F inline receptacle - - - 38
GT01G inline receptacle - - - 39
GT01LCF/01LCFZ inline receptacle - - - 40
GT01R inline receptacle - - - 41
GT01RV inline receptacle - - - 42
GT02R/02RFS box mount receptacle for front panel mounting - - - 43
GT020R/020RFSM box mount receptacle for front panel mounting - - - 44
GT030 square flange receptacle for rear panel mounting - - - 45
GT030A square flange receptacle for rear panel mounting - - - 46
GT030AF/030F square flange receptacle for rear panel mounting - - - 47
GT030G square flange receptacle for rear panel mounting - - - 48
GT030LCF/030LCFZ square flange receptacle for rear panel mounting - - - 49
GT030R square flange receptacle for rear panel mounting - - - 50
GT030RV square flange receptacle for rear panel mounting - - - 51
GT06A straight plug - - - 52
GT06AF/06F straight plug - - - 53
GT06CF straight plug - - - 54
GT06CFGG straight plug - - - 55
GT06G straight plug - - - 56
GT06G2 straight plug - - - 57
GT06LC straight plug - - - 58
GT06LCF/06LCFZ straight plug - - - 59
GT06LT straight plug - - - 60
GT06PFC straight plug - - - 61
GT06PG straight plug - - - 62
GT06PP/064PP panel plug - - - 63
GT06R straight plug - - - 64
GT06RV straight plug - - - 65
GT06SB straight plug - - - 66
GT06SBT straight plug - - - 67
GT065SL straight plug - - - 68
GT07R jam nut receptacle - - - 69
GT070 jam nut receptacle - - - 70
GT08A 90° angle plug - - - 71
GT08AF/08F 90° angle plug - - - 72
GT08CFGG 90° angle plug - - - 73
GT08LT 90° angle plug - - - 74
GT08PFC 90° angle plug - - - 75
GT08R 90° angle plug - - - 76
GT05 dummy receptacle - - - 77
GTTB thru-bulkhead receptacles - - - 78
Sealing gaskets - - - 79
Receptacle protection caps - - - 80
Plug protection caps - - - 81
MS3057-A cable clamp - - - 82
MS3420 bushing - - - 83
MS3057-C style (10-350349) cable clamp - - - 84
Rear mounting data - receptacles, sealing plugs, sealing ranges - - - 85
Crimp and solder contact information - - - 86, 87

HOW TO ORDER, connector intermateability - - - 88
GT Amphe-Power Connectors with RADSOK® Technology,
Amphe-Power™ Amphe-GTR, Power GT - - - 89
Special Application GT Connectors:
GTC-M Series with metal clips, GT-PC Connectors for high voltage power applications,
GT Connectors for the HMI Lighting industry - - - 90
Additional Amphenol Industrial Products for the Rail Industry - - - 91, 92
Sales office listing

Amphenol Aerospace operates quality systems that are certified to ISO9001: 2000 by third party registrars.

Amphenol® GT Connectors
with reverse bayonet coupling
the preferred connector for mass transit

Designed originally for use by the military, the heavy duty GT connector has become widely used in commercial, geophysical, aerospace, ground support and shipboard applications. It is the preferred connector for mass transit.

Variety of Shell Styles are Available

Wall Mount Receptacle

Inline Receptacle

Straight Plug

Plug With Rubber Covered Coupling Nut

Jam Nut Receptacle

NOTE:
The connector products in this brochure were formerly known as Bendix® products. These products are now manufactured and sold under the Amphenol® brand name. The name "Amphenol" will replace the name "Bendix" on products and literature in the future.

Amphenol® GT reverse bayonet coupling connectors with MIL-C-5015 insert patterns features:

- Quick positive coupling
- Audible, tactile and visual indication of full coupling
- Waterproof – IP67 rated
- No lockwiring required
- High shock and vibration capabilities
- Inserts available in Neoprene and Viton* materials
- Low smoke/flame retardant inserts also available
- Operating temperature range:
  With Neoprene inserts: –55°C to +125°C
  With Viton** inserts: –50°C to +200°C
  With low smoke/flame retardant inserts: –55°C to +125°C
- Available in both crimp and solder terminations
- Contacts available in gold and silver plating
- Numerous military and commercial finishes available
- Zinc alloy plating (cadmium free) available
- Rugged construction; aluminum or stainless steel components
- Available with resilient cover coupling for added damage protection and increased gripping surface
- Intermateable with existing VG95234 connectors
- 2000 couplings minimum
- UL recognized
- Up to 50% more ampacity with the use of RADSOK® technology (see page 89)

Amphenol's special offerings of GT Series connectors (see end of catalog) include: GT Amphe-Power® Connectors with RADSOK® technology, the GTC-M Series with metal clip inserts and GT-PC Series for high voltage power applications. There is also information on other Amphenol Industrial Products for the Rail Industry at the end of this catalog.

For further information on your individual application requirements, contact:

Amphenol Corporation
Amphenol Industrial Operations
40-60 Delaware Avenue
Sidney, New York 13838-1395
Phone: 607-563-5011 Fax: 607-563-5351
www.amphenol-industrial.com

**For availability of Viton inserts consult Amphenol, Sidney, NY.
Viton is a registered trademark of Dupont/Dow Corning.

GT Series
insert availability

Insert Arrangement	Service Rating	Total Contacts	Contact Size								
								Coax			
			0	4	8	12	16	0	4	8	12
10SL-3	A	3					3				
10SL-4†	A	2					2				
14S-2	Inst.	4					4				
14S-4	D	1					1				
14S-5	Inst.	5					5				
14S-6	Inst.	6					6				
14S-7	A	3					3				
14S-9	A	2					2				
14S-10	Inst.	4					4				
14S-12	A	3					3				
14S-A7	A	7					7				
16S-1	A	7					7				
16S-3	B	1					1				
16S-4	D	2					2				
16S-5	A	3					3				
16S-6	A	3					3				
16S-8	A	5					5				
16-2	E	1				1					
16-7	A	3			1		2				
16-9	A	4				2	2				
16-10	A	3				3					
16-11	A	2				2					
16-12	A	1		1							
16-13	A	2				2					
16-59	A	4				4					
18-1	A/Inst.	10					10				
18-3	D	2				2					
18-4	D	4					4				
18-5	D	3				2	1				
18-6	D	1		1							
18-7	B	1			1						
18-8	A	8				1	7				
18-9	Inst.	7				2	5				
18-10	A	4				4					
18-11	A	5				5					
18-12	A	6					6				
18-13	A	4			1	3					
18-14	A	2		1			1				
18-15	A	4				4					
18-16	C	1				1					
18-17	Inst.	7				2	5				
18-19	A	10					10				
18-20	A	5					5				
18-22	D	3					3				
18-24	A/Inst.	10					10				
18-29	A	5					5				
18-30	A	5					5				
18-31	A	5					5				

*Crimp contacts accommodate wire the same size as the contact as well as wire of the next smaller, even size. Arrangements identified with an asterisk (*) are exceptions. See insert arrangement drawings on pages 6-28 for application wire size.

Insert Arrangement	Service Rating	Total Contacts	Contact Size								
								Coax			
			0	4	8	12	16	0	4	8	12
20-2	D	1	1								
20-3	D	3				3					
20-4	D	4				4					
20-6	D	3					3				
20-7	D/A	8					8				
20-8	Inst.	6			2		4				
20-9	D/A	8				1	7				
20-11	Inst.	13					13				
20-12	A	2		1			1				
20-14	A	5			2	3					
20-15	A	7				7					
20-16	A	9				2	7				
20-17	A	6				5	1				
20-18	A	9				3	6				
20-19	A	3			3						
20-20	A	4		1		3					
20-21	A	9				1	8				
20-22	A	6			3		3				
20-23	A	2			2						
20-24	A	4			2		2				
20-25	Inst.	13					13				
20-26	A	19					19				
20-27	A	14					14				
20-29	A	17					17				
20-30	Inst.	13					13				
20-33	A	11					11				
20-51	A	3			3						
20-57	A	7				7*					
20-58	A	10				5	5				
20-59	A	3			3*						
20-66	A	6				5*	1				
20-79	A/D	8				1	7				
22-1	D	2			2						
22-2	D	3			3						
22-4	A	4			2	2					
22-5	D	6				2	4				
22-6	D	3			2		1				
22-7	E	1	1								
22-8	E	2				2					
22-9	E	3				3					
22-10	E	4					4				
22-11	B	2					2				
22-12	D	5			2		3				
22-13	D/A	5				4	1				
22-14	A	19					19				
22-15	E/A	6				5	1				

†10SL-4 arrangement available only with pin contacts in receptacle and socket contacts in plug

**Coaxial cable data can be found on insert arrangement drawings, pages 6-28. For further information on coaxial contacts and cable see catalog 12-130.

GT Series
insert availability, cont.

Insert Arrangement	Service Rating	Total Contacts	Contact Size								
			0	4	8	12	16	Coax**			
								0	4	8	12
22-16	A	9				3	6				
22-17	D/A	9				1	8				
22-18	D/A	8					8				
22-19	A	14					14				
22-20	A	9					9				
22-21	A	3	1				2				
22-22	A	4			4						
22-23	D/A	8				8					
22-24	D/A	6				2	4				
22-27	D/A	9			1		8				
22-28	A	7				7					
22-33	D/A	7					7				
22-34	D	5				3	2				
22-63	A	12				4	8				
22-65	D/A	8				8*					
22-70	A	13				8	5				
22-80	A	3			3*						
24-2	D	7				7					
24-3	D	7				2	5				
24-5	A	16					16				
24-6	D/A	8				8					
24-7	A	16				2	14				
24-9	A	2		2							
24-10	A	7			7						
24-11	A	9			3	6					
24-12	A	5		2		3					
24-16	D/A	7			1	3	3				
24-17	D	5				2	3				
24-19	A	12					12				
24-20	D	11				2	9				
24-21	D	10			1		9				
24-22	D	4			4						
24-27	E	7					7				
24-28	Inst.	24					24				
24-51	A	5			5						
24-52	Hi Volt.	1				1					
24-53	A	5			5						
24-58	A	13			3	3	7				
24-59	A	14				7	7				
24-60	A	7			7*						
24-65	A	15				11	4				
24-66	D	7				7					
24-67	Inst.	19				19					
24-71	A	7			7*						
24-75	A	7			7*						
24-79	A	5			5						
24-80	Inst.	23					23				

*Crimp contacts accommodate wire the same size as the contact as well as wire of the next smaller, even size. Arrangements identified with an asterisk (*) are exceptions. See insert arrangement drawings on pages 6-28 for application wire size.

Insert Arrangement	Service Rating	Total Contacts	Contact Size								
			0	4	8	12	16	Coax**			
								0	4	8	12
24-84	A	19				1					18
24-96	Inst.	28					28				
24-AJ	A	25					25				
28-1	D/A	9			3	6					
28-2	D	14				2	12				
28-3	E	3			3						
28-4	E/D	9				2	7				
28-5	D	5		2		1	2				
28-6	D	3		3							
28-7	D	2		2							
28-8	E/D/A	12				2	10				
28-9	D	12				6	6				
28-10	D/A	7		2	2	3					
28-11	A	22				4	18				
28-12	A	26					26				
28-13	A	26					26				
28-15	A	35					35				
28-16	A	20					20				
28-17	B/D/A	15					15				
28-18	C/D/A/Inst.	12					12				
28-19	B/D/A	10				4	6				
28-20	A	14				10	4				
28-21	A	37					37				
28-22	D	6		3			3				
28-51	A	12				12					
28-59	A	17				7	10				
28-66	A	16			2	14					
28-72	Coax	3							3		
28-74	A	16			7*		9				
28-75	A	16			7*		9				
28-79	A	16			7		9				
28-82	D	6			2	4					
28-84	A	9			9						
28-AY	A	9		4			5				
32-1	E/D	5	2			3					
32-2	E	5		3			2				
32-3	D	9	1	2		2	4				
32-4	A/D	14				2	12				
32-5	D	2	2								
32-6	A	23		2	3	2	16				
32-7	Inst./A	35				7	28				
32-8	A	30				6	24				
32-9	D	14		2			12				
32-10	E/B/D/A	7		2	2		3				
32-12	A/D	15				5	10				
32-13	D	23				5	18				
32-15	D	8	2			6					
32-16	A	23		2	3	2	16				

**Coaxial cable data can be found on insert arrangement drawings, pages 6-28. For further information on coaxial contacts and cable see catalog 12-130.

GT Series
insert availability, cont.

Insert Arrange-ment	Service Rating	Total Con-tacts	Contact Size								
								Coax**			
			0	4	8	12	16	0	4	8	12
32-17	D	4		4							
32-22	A	54					54				
32-25	A	25				25					
32-31	A	31					31				
32-48	Inst.	48					48				
32-52	D	8	2			6					
32-53	E/Inst.	42				5	37				
32-56	A	30				6*	24				
32-57	Coax	8				6		2			
32-58	Coax	4							4		
32-59	A	42					40			2	
32-60	A	23					15			8	
32-62	Coax	23		2	1	2	16			2	
32-64	Inst.	54					54				
32-68	A	16					12		4		
32-73	A	46					46				
32-75	Coax	9				2				7	
32-76	A	19				19					
32-79	D	5		4	1						
32-82	A	16		4			12				
32-AF	A	55					55				
32-AM	A	1	1 size 4/0								
36-1	D	22				4	18				
36-3	D	6	3			3					
36-4	D/A	3	3								
36-5	A	4	4								
36-6	A	6	2	4							
36-7	A	47				7	40				
36-8	A	47				1	46				
36-9	A	31		1	2	14	14				
36-10	A	48					48				
36-11	A	48					48				
36-12	A	48					48				
36-13	E/A	17				2	15				
36-14	D	16			5	5	6				
36-15	D/A	35					35				
36-16	A	47				7	40				
36-17	A	47				7	40				
36-18	A	31		1	2	14	14				
36-20	A	34			2	2	30				
36-22	D	22				22					
36-51	D	4	2	2							
36-52	A	52					52				
36-54	A	39			8		31				
36-55	A	39			8*		31				
36-59	A	53				3*	50				
36-60	A	47				7*	40				
36-64	Coax	4						4			
36-65	Coax	4						4			

*Crimp contacts accommodate wire the same size as the contact as well as wire of the next smaller, even size. Arrangements identified with an asterisk (*) are exceptions. See insert arrangement drawings on pages 6-28 for application wire size.

Insert Arrange-ment	Service Rating	Total Con-tacts	Contact Size								
								Coax**			
			0	4	8	12	16	0	4	8	12
36-71	A	53				3	50				
36-73	Coax	7							7		
36-74	A	44					43			1	
36-75	A	48					48*				
36-76	A	47					47				
36-77	D	7		7							
36-78	A	14			12		2				
36-79	A	20				20					
36-80	A	20				20*					
36-83	Coax	7							7		
36-85	A/D	35					35*				
36-97	C	1	1 size 4/0								
36-99	D	12		3	3	3	3				
36-AF	A	48					48				
40-1	D	30				6	24				
40-5	A	5	5								
40-9	A	47			1	22	24				
40-10	A	29		4	9		16				
40-30	A	30		1		29					
40-35	D	35				35					
40-53	A	60					60				
40-56	A	85					85				
40-57	E	4	4								
40-61	A	59			1	3	55				
40-62	A	60					60				
40-63	A	61					61*				
40-64	Coax	36				3	20			13	
40-66	Coax	4						4			
40-67	A	11					1		10		
40-68	A	21			21						
40-70	A	61					61				
40-72	A	11					1		10		
40-73	A	61					61				
40-74	A	6				1		4	1		
40-75	E	5	4			1					
40-80	A	11		10			1				
40-81	A	62					62*				
40-82	A	62					62				
40-85	A	60					60*				
40-86	Coax	4						4			
40-87	D	7		7							
40-AD	A	8	4		4						
40-AG	A	38				38					
40-AP	E	2	2 size 4/0								
40-AR	Inst.	13	3	3		7					
40-AS	A	40				25	15				
40-AT	A	43			1	24	18				
40-AU	A	14		3	10		1				
40-AV	D	3	3 size 2/0								

**Coaxial cable data can be found on insert arrangement drawings, pages 6-28. For further information on coaxial contacts and cable see catalog 12-130.

GT Series
insert alternate positioning

To avoid cross-plugging problems in applications requiring the use of more than one connector of the same size and arrangement, alternate rotations are available as indicated in the accompanying charts.

As shown in the diagram below, the front face of the pin insert is rotated within the shell in a clockwise direction from the normal shell key. The socket insert would be rotated counter-clockwise the same number of degrees in respect to the normal shell key.

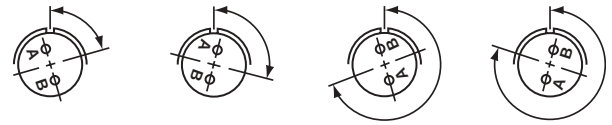

View looking into front face of pin insert or rear of socket insert.

The following insert arrangements have the same alternate insert rotations for W, X, Y and Z, which are:

Degrees			
W	X	Y	Z
80	110	250	280

16-7	20-16	22-18	24-4	24-28	28-16	32-10
18-5	20-20	22-19	24-5	24-AJ	28-17	32-12
18-9	20-22	22-21	24-6	28-1	28-19	32-13
18-13	22-3	22-24	24-7	28-4	28-20	32-22
18-14	22-6	22-25	24-12	28-8	28-21	32-AF
20-7	22-12	22-29	24-14	28-9	32-1	36-1
20-8	22-14	22-33	24-16	28-10	32-3	36-7
20-9	22-15	22-34	24-17	28-11	32-4	36-8
20-12	22-16	24-1	24-20	28-14	32-6	36-13
20-14	22-17	24-3	24-21	28-15	32-9	40-53

Insert Arrangement	Degrees			
	W	X	Y	Z
10SL-4	63	–	–	–
14S-2	–	120	240	–
14S-5	–	110	–	–
14S-7	90	180	270	–
14S-9	70	145	215	290
16-9	35	110	250	325
16-10	90	180	270	–
16-11	35	110	250	325
16-13	35	110	250	325
16S-1	80	–	–	280
16S-4	35	110	250	325
16S-5	70	145	215	290
16S-6	90	180	270	–
16S-8	–	170	265	–
18-1	70	145	215	290
18-3	35	110	250	325
18-4	35	110	250	325
18-8	70	–	–	290
18-10	–	120	240	–
18-11	–	170	265	–
18-12	80	–	–	280
18-15	–	120	240	–
18-20	90	180	270	–
18-22	70	145	215	290
18-29	90	180	270	–
20-3	70	145	215	290
20-4	45	110	250	–
20-5	35	110	250	325
20-6	70	145	215	290
20-15	80	–	–	280
20-17	90	180	270	–
20-18	35	110	250	325

Insert Arrangement	Degrees			
	W	X	Y	Z
20-19	90	180	270	–
20-21	35	110	250	325
20-23	35	110	250	325
20-24	35	110	250	325
20-27	35	110	250	325
20-29	80	–	–	280
20-33	–	–	–	280
22-1	35	110	250	325
22-2	70	145	215	290
22-4	35	110	250	325
22-5	35	110	250	325
22-8	35	110	250	325
22-9	70	145	215	290
22-10	35	110	250	325
22-11	35	110	250	325
22-13	35	110	250	325
22-20	35	110	250	325
22-22	–	110	250	–
22-23	35	–	250	–
22-27	80	–	250	280
22-28	80	–	–	280
24-2	80	–	–	280
24-9	35	110	250	325
24-10	80	–	–	280
24-11	35	110	250	325
24-22	45	110	250	–
24-27	80	–	–	280
24-96	65	–	–	–
28-2	35	110	250	325
28-3	70	145	215	290
28-5	35	110	250	325
28-6	70	145	215	290

Insert Arrangement	Degrees			
	W	X	Y	Z
28-7	35	110	250	325
28-12	90	180	270	–
28-18	70	145	215	290
28-22	70	145	215	290
28-AY	45	110	250	–
32-2	70	145	215	290
32-5	35	110	250	325
32-7	80	125	235	280
32-8	80	125	235	280
32-15	35	110	250	280
32-17	45	110	250	–
32-25	60	120	–	–
32-64*	80	100	110	250
32-68	30	–	–	–
32-82	30	–	–	–
36-3	70	145	215	290
36-4	70	145	215	290
36-5	–	120	240	–
36-6	35	110	250	325
36-9	80	125	235	280
36-10	80	125	235	280
36-14	90	180	270	–
36-15	60	125	245	305
36-AF	65	–	–	–
40-1	65	130	235	300
40-5	33	–	–	270
40-9	65	125	225	310
40-10	65	125	225	310
40-35	70	130	230	290
40-56	72	144	216	288
40-AG	37	74	285	322

*Additional rotations available; consult Amphenol for information.

GT Series
contact arrangements

front face of pin insert or rear face of socket insert illustrated

	Front of Socket Insert	Front of Socket Insert			
Insert Arrangement	**10SL-3**	**10SL-4**	**14S-2**	**14S-4**	**14S-5**
Service Rating	**A**	**A**	**Inst.**	**D**	**Inst.**
Number of Contacts	**3**	**2**	**4**	**1**	**5**
Contact Size	**16**	**16**	**16**	**16**	**16**

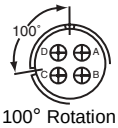

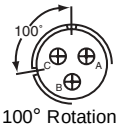

				100° Rotation of 14S-2	100° Rotation of 14S-7
Insert Arrangement	**14S-6**	**14S-7**	**14S-9**	**14S-10**	**14S-12**
Service Rating	**Inst.**	**A**	**A**	**Inst.**	**A**
Number of Contacts	**6**	**3**	**2**	**4**	**3**
Contact Size	**16**	**16**	**16**	**16**	**16**

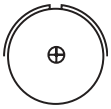
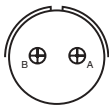
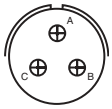

Insert Arrangement	**14S-A7**	**16S-1**	**16S-3**	**16S-4**	**16S-5**
Service Rating	**A**	**A**	**B**	**D**	**A**
Number of Contacts	**7**	**7**	**1**	**2**	**3**
Contact Size	**16**	**16**	**16**	**16**	**16**

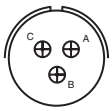
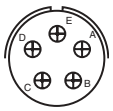

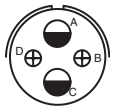

Insert Arrangement	**16S-6**	**16S-8**	**16-2**	**16-7**	**16-9**
Service Rating	**A**	**A**	**E**	**A**	**A**
Number of Contacts	**3**	**5**	**1**	**1 2**	**2 2**
Contact Size	**16**	**16**	**12**	**8 16**	**12 16**

CONTACT LEGEND	**16**	**12**	**8**	**4**	**0**

GT Series
contact arrangements

front face of pin insert or rear face of socket insert illustrated

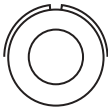

Insert Arrangement	**16-10**	**16-11**	**16-12**	**16-13**	**16-59**
Service Rating	**A**	**A**	**A**	**A**	**A**
Number of Contacts	**3**	**2**	**1**	**2***	**4**
Contact Size	**12**	**12**	**4**	**12**	**12**

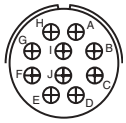

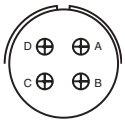

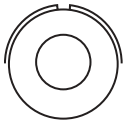

Insert Arrangement	**18-1**	**18-3**	**18-4**	**18-5**	**18-6**	**18-7**
Service Rating	**B, C, F, G = A; Bal. = Inst.**	**D**	**D**	**D**	**D**	**B**
Number of Contacts	**10**	**2**	**4**	**2 1**	**1**	**1**
Contact Size	**16**	**12**	**16**	**12 16**	**4**	**8**

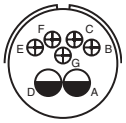

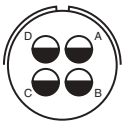

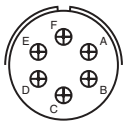

Insert Arrangement	**18-8**	**18-9**	**18-10**	**18-11**	**18-12**	**18-13**
Service Rating	**A**	**Inst.**	**A**	**A**	**A**	**A**
Number of Contacts	**1 7**	**2 5**	**4**	**5**	**6**	**1 3**
Contact Size	**12 16**	**12 16**	**12**	**12**	**16**	**8 12**

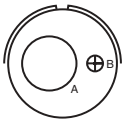

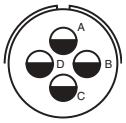

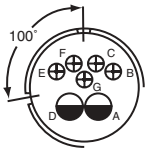

100° Rotation of 18-9

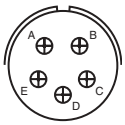

Insert Arrangement	**18-14**	**18-15**	**18-16**	**18-17**	**18-19**	**18-20**
Service Rating	**A**	**A**	**C**	**Inst.**	**A**	**A**
Number of Contacts	**1 1**	**4****	**1**	**2 5**	**10**	**5**
Contact Size	**4 16**	**12**	**12**	**12 16**	**16**	**16**

CONTACT LEGEND	**16**	**12**	**8**	**4**	**0**

* A = Iron; B = Constantan
**A, C = Iron; B, D = Constantan

GT Series
contact arrangements

front face of pin insert or rear face of socket insert illustrated

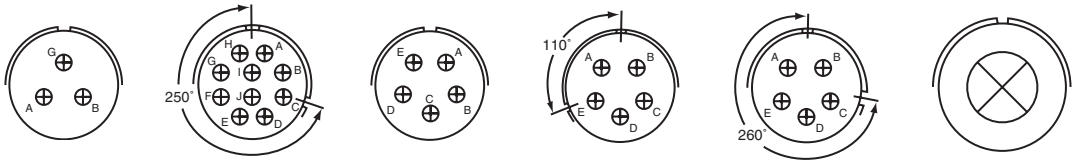

250° Rotation of 18-1 | 110° Rotation of 18-20 | 260° Rotation of 18-20

Insert Arrangement	**18-22**	**18-24**	**18-29**	**18-30**	**18-31**	**20-2**
Service Rating	**D**	**B, C, F, G = A; Bal. = Inst.**	**A**	**A**	**A**	**D**
Number of Contacts	**3**	**10**	**5**	**5**	**5**	**1**
Contact Size	**16**	**16**	**16**	**16**	**16**	**0**

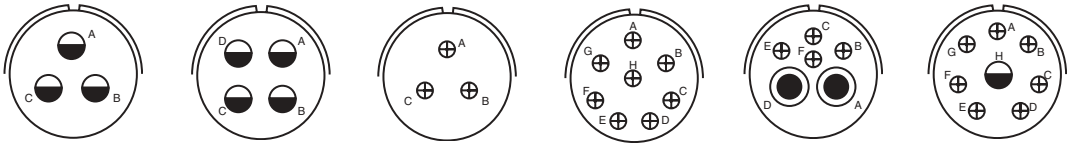

Insert Arrangement	**20-3**	**20-4**	**20-6**	**20-7**	**20-8**	**20-9**
Service Rating	**D**	**D**	**D**	**A, B, H, G = D; C, D, E, F = A**	**Inst.**	**H = D; Bal. = A**
Number of Contacts	**3**	**4**	**3**	**8**	**2 4**	**1 7**
Contact Size	**12**	**12**	**16**	**16**	**8 16**	**12 16**

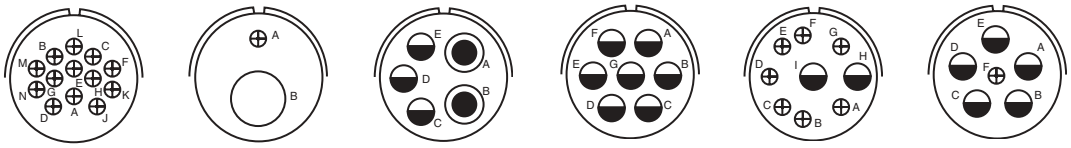

Insert Arrangement	**20-11**	**20-12**	**20-14**	**20-15**	**20-16**	**20-17**
Service Rating	**Inst.**	**A**	**A**	**A**	**A**	**A**
Number of Contacts	**13**	**1 1**	**2 3**	**7**	**2 7**	**5 1**
Contact Size	**16**	**4 16**	**8 12**	**12**	**12 16**	**12 16**

CONTACT LEGEND	**16**	**12**	**8**	**4**	**0**

GT Series
contact arrangements

front face of pin insert or rear face of socket insert illustrated

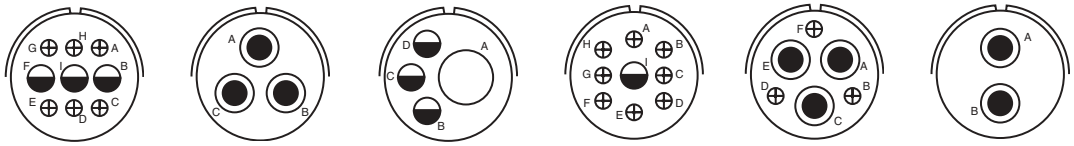

Insert Arrangement	20-18	20-19	20-20	20-21	20-22	20-23
Service Rating	A	A	A	A	A	A
Number of Contacts	3 6	3	1 3	1 8	3 3	2
Contact Size	12 16	8	4 12	12 16	8 16	8

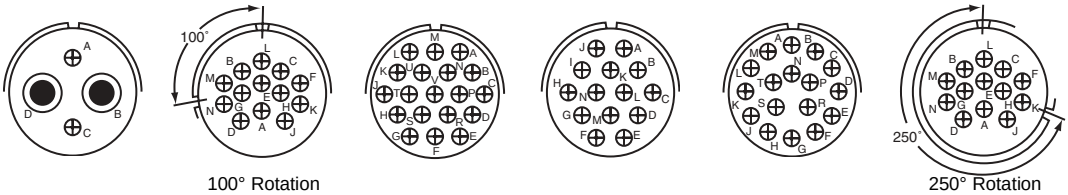

100° Rotation of 20-11

250° Rotation of 20-11

Insert Arrangement	20-24	20-25	20-26	20-27	20-29	20-30
Service Rating	A	Inst.	A	A	A	Inst.
Number of Contacts	2 2	13	19	14	17	13
Contact Size	8 16	16	16	16	16	16

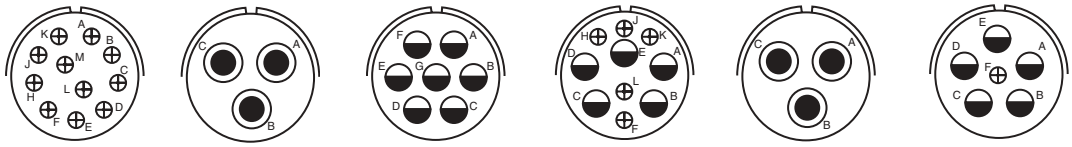

Insert Arrangement	20-33	20-51	20-57	20-58	20-59	20-66
Service Rating	A	A	A	A	A	A
Number of Contacts	11	3*	7*	5 5	3*	1 5
Contact Size	16	8	12 for #14 or 16 wire	12 16	8 for #10 or 12 wire	16 12 for #10 wire

CONTACT LEGEND 16 12 8 4 0

* Solderless

GT Series
contact arrangements

front face of pin insert or rear face of socket insert illustrated

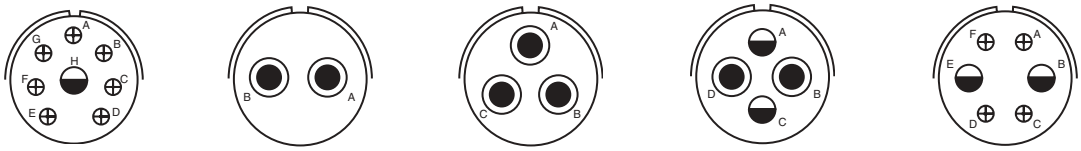

Insert Arrangement	**20-79**	**22-1**	**22-2**	**22-4**	**22-5**
Service Rating	**H=D; Bal. = A**	**D**	**D**	**A**	**D**
Number of Contacts	**7* 1***	**2**	**3**	**2 2**	**2 4**
Contact Size	**16 12 for #16 wire**	**8**	**8**	**8 12**	**12 16**

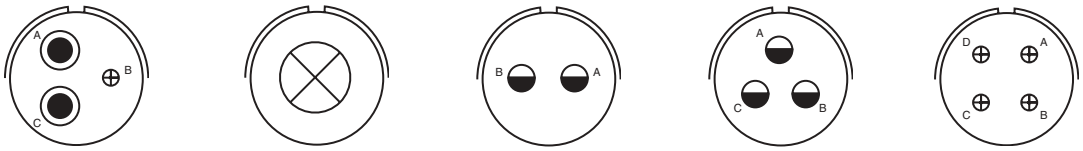

Insert Arrangement	**22-6**	**22-7**	**22-8**	**22-9**	**22-10**
Service Rating	**D**	**E**	**E**	**E**	**E**
Number of Contacts	**2 1**	**1**	**2**	**3**	**4**
Contact Size	**8 16**	**0**	**12**	**12**	**16**

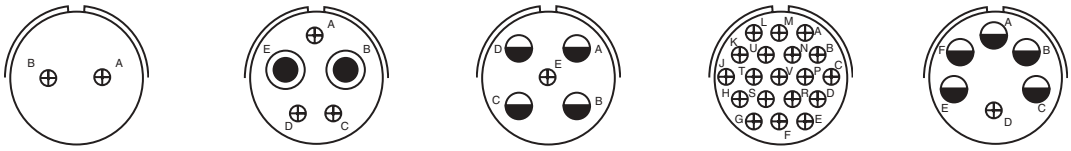

Insert Arrangement	**22-11**	**22-12**	**22-13**	**22-14**	**22-15**
Service Rating	**B**	**D**	**E = D; A, B, C, D = A**	**A**	**D = E; A, B, C, E, F = A**
Number of Contacts	**2**	**2 3**	**4 1**	**19**	**5 1**
Contact Size	**16**	**8 16**	**12 16**	**16**	**12 16**

CONTACT LEGEND **16 12 8 4 0**

* Solderless

GT Series
contact arrangements

front face of pin insert or rear face of socket insert illustrated

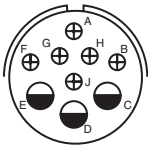
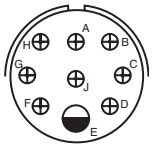
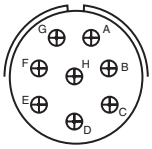
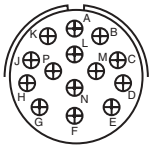
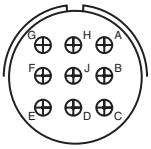

Insert Arrangement	**22-16**	**22-17**	**22-18**	**22-19**	**22-20**
Service Rating	**A**	**A = D; Bal. = A**	**A, B, F, G, H = D; C, D, E = A**	**A**	**A**
Number of Contacts	**3 6**	**1 8**	**8**	**14**	**9**
Contact Size	**12 16**	**12 16**	**16**	**16**	**16**

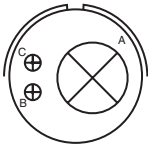
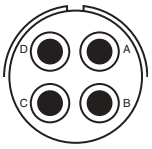
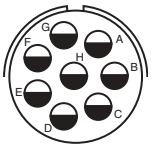
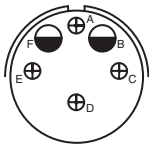
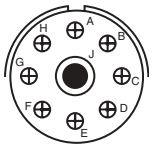

Insert Arrangement	**22-21**	**22-22**	**22-23**	**22-24**	**22-27**
Service Rating	**A**	**A**	**H = D; Bal. = A**	**C, D, E = D; A, B, F = A**	**J = D; Bal. = A**
Number of Contacts	**1 2**	**4**	**8**	**2 4**	**1 8**
Contact Size	**0 16**	**8**	**12**	**12 16**	**8 16**

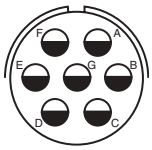
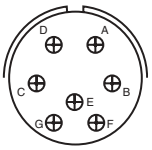
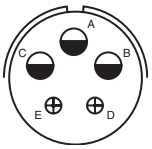
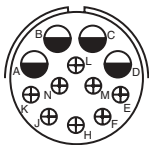
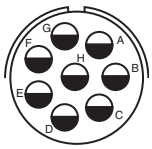

Insert Arrangement	**22-28**	**22-33**	**22-34**	**22-63**	**22-65**
Service Rating	**A**	**A, B, C, D = D; E. F. G = A**	**D**	**A**	**H = D; Bal. = A**
Number of Contacts	**7**	**7**	**3 2**	**4 8**	**8***
Contact Size	**12**	**16**	**12 16**	**12 16**	**12 for #14 or 16 wire**

CONTACT LEGEND **16 12 8 4 0**

* Solderless

GT Series
contact arrangements

front face of pin insert or rear face of socket insert illustrated

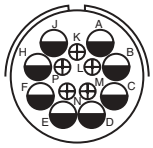
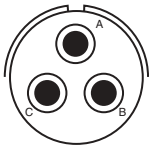
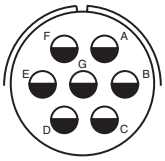
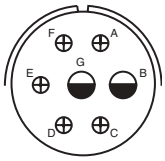
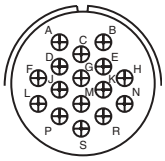

Insert Arrangement	**22-70**	**22-80**	**24-2**	**24-3**	**24-5**
Service Rating	**A**	**A**	**D**	**D**	**A**
Number of Contacts	**8 5**	**3***	**7**	**2 5**	**16**
Contact Size	**12 16**	**8 for #10 or 12 wire**	**12**	**12 16**	**16**

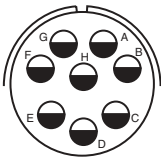
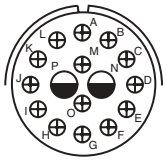
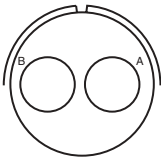
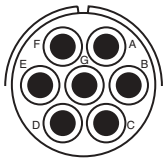
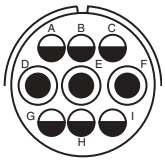

Insert Arrangement	**24-6**	**24-7**	**24-9**	**24-10**	**24-11**
Service Rating	**A, G, H = D; Bal. = A**	**A**	**A**	**A**	**A**
Number of Contacts	**8**	**2 14**	**2**	**7**	**3 6**
Contact Size	**12**	**12 16**	**4**	**8**	**8 12**

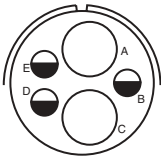
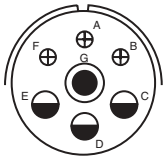
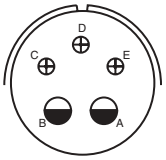
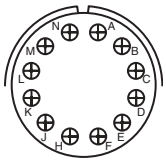
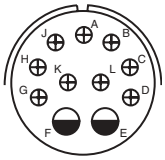

Insert Arrangement	**24-12**	**24-16**	**24-17**	**24-19**	**24-20**
Service Rating	**A**	**A, B, F, G = D; C, D, E = A**	**D**	**A**	**D**
Number of Contacts	**2 3**	**1 3 3**	**2 3**	**12**	**2 9**
Contact Size	**4 12**	**8 12 16**	**12 16**	**16**	**12 16**

* Solderless

CONTACT LEGEND **16 12 8 4 0**

GT Series
contact arrangements

front face of pin insert or rear face of socket insert illustrated

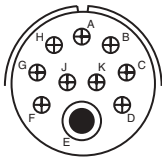
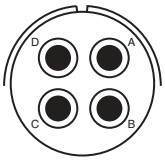
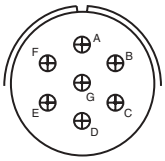
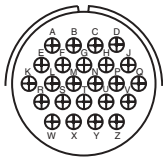
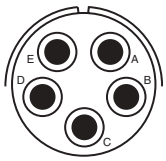

Insert Arrangement	**24-21**	**24-22**	**24-27**	**24-28**	**24-51**
Service Rating	**D**	**D**	**E**	**Inst.**	**A**
Number of Contacts	**1 9**	**4**	**7**	**24**	**5***
Contact Size	**8 16**	**8**	**16**	**16**	**B, E for AN #10 or 12 wire A, C, D for AN #8 wire**

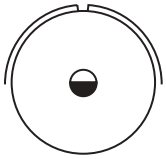
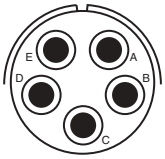

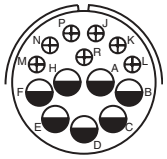
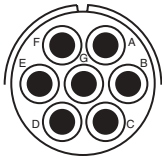

Insert Arrangement	**24-52**	**24-53**	**24-58**	**24-59**	**24-60**
Service Rating	**Hi-Volt**	**A**	**A**	**A**	**A**
Number of Contacts	**1**	**5***	**3 3 7**	**7 7**	**7***
Contact Size	**12**	**8**	**8 12 16**	**12 16**	**8 for #10 or 12 wire**

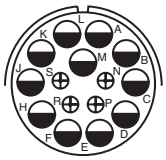
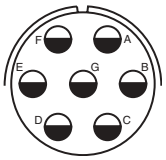
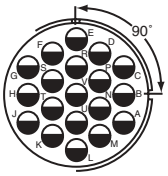
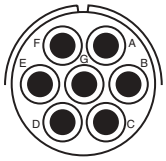
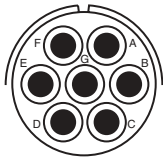

Insert Arrangement	**24-65**	**24-66**	**24-67**	**24-71**	**24-75**
Service Rating	**A**	**D**	**Inst.**	**A**	**A**
Number of Contacts	**11 4**	**7**	**19**	**2* 5***	**5 2**
Contact Size	**12 16**	**12**	**12**	**8 8 for #10 or 12 wire**	**8 8 for #16 wire**

CONTACT LEGEND **16 12 8 4 0**

* Solderless

GT Series
contact arrangements

front face of pin insert or rear face of socket insert illustrated

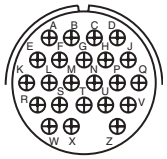
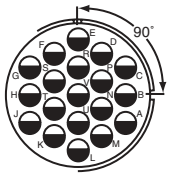

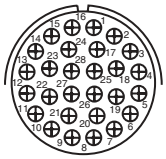

Insert Arrangement	**24-79**	**24-80**	**24-84**	**24-96**	**24-AJ**
Service Rating	**A**	**Inst.**	**A**	**Inst.**	**A**
Number of Contacts	**5**	**23**	**1 18**	**28**	**25**
Contact Size	**8**	**16**	**12 12 (Coax) RG-188/U or RG-174/U**	**16**	**16**

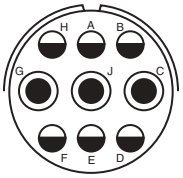
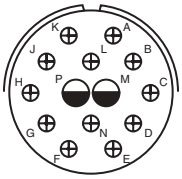
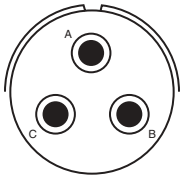
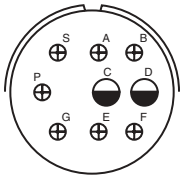

Insert Arrangement	**28-1**	**28-2**	**28-3**	**28-4**
Service Rating	**A, J, E = D; Bal. = A**	**D**	**E**	**G, P, S = E; Bal. = D**
Number of Contacts	**3 6**	**2 12**	**3**	**2 7**
Contact Size	**8 12**	**12 16**	**8**	**12 16**

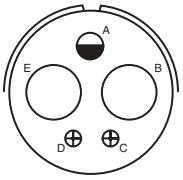
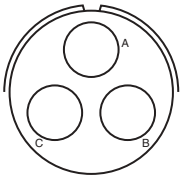
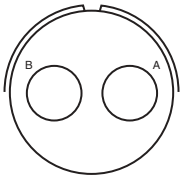
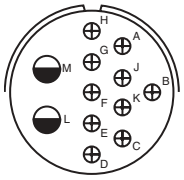

Insert Arrangement	**28-5**	**28-6**	**28-7**	**28-8**
Service Rating	**D**	**D**	**D**	**L, M = E; B = D; Bal. = A**
Number of Contacts	**2 1 2**	**3**	**2**	**2 10**
Contact Size	**4 12 16**	**4**	**4**	**12 16**

CONTACT LEGEND	**16**	**12**	**8**	**4**	**0**

GT Series
contact arrangements

front face of pin insert or rear face of socket insert illustrated

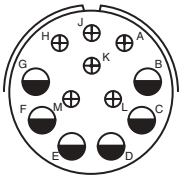

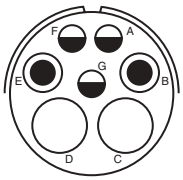

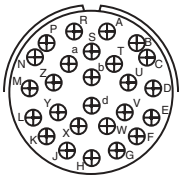

Insert Arrangement	**28-9**	**28-10**	**28-11**	**28-12**
Service Rating	**D**	**G = D; Bal. = A**	**A**	**A**
Number of Contacts	**6 6**	**2 2 3**	**4 18**	**26**
Contact Size	**12 16**	**4 8 12**	**12 16**	**16**

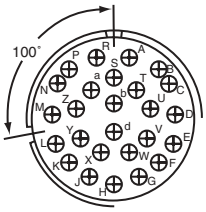

100° Rotation
of 32-6

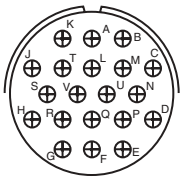

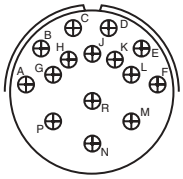

Insert Arrangement	**28-13**	**28-15**	**28-16**	**28-17**
Service Rating	**A**	**A**	**A**	**R = B; M, N, P = D; A to L = A**
Number of Contacts	**26**	**35**	**20**	**15**
Contact Size	**16**	**16**	**16**	**16**

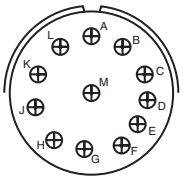

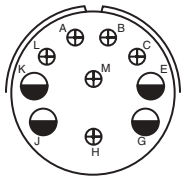

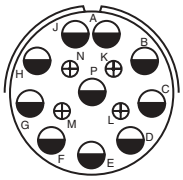

Insert Arrangement	**28-18**	**28-19**	**28-20**
Service Rating	**M = C; G, H, J, K,L = D; A, B = A; Bal. = Inst.**	**H, M = B; A, B, = D; Bal. = A**	**A**
Number of Contacts	**12**	**4 6**	**10 4**
Contact Size	**16**	**12 16**	**12 16**

* Solderless

CONTACT LEGEND **16** **12** **8** **4** **0**

GT Series
contact arrangements

front face of pin insert or rear face of socket insert illustrated

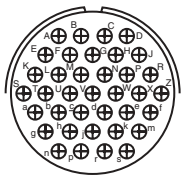
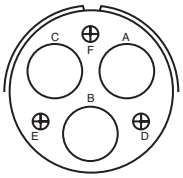
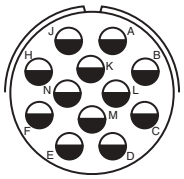
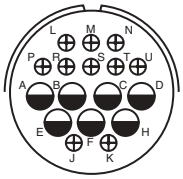

Insert Arrangement	**28-21**	**28-22**	**28-51**	**28-59**
Service Rating	**A**	**D**	**A**	**A**
Number of Contacts	**37**	**3 3**	**12**	**7 10**
Contact Size	**16**	**4 16**	**12**	**12 16**

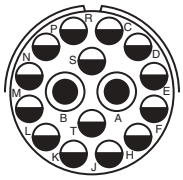
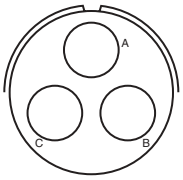
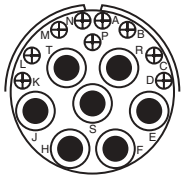
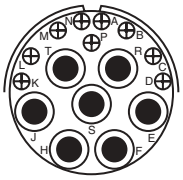

Insert Arrangement	**28-66**	**28-72**	**28-74**	**28-75**
Service Rating	**A**	**–**	**A**	**A**
Number of Contacts	**2 14**	**3**	**9* 4* 3***	**9* 7***
Contact Size	**8 12**	**4 (Coax) RG-59A/U or RG-62A/U**	**16 8 8 for #10 wire (S, T, R)**	**16 8 for #10 wire**

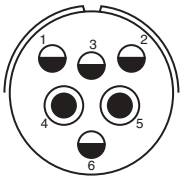
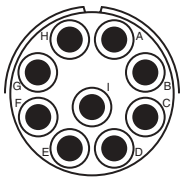
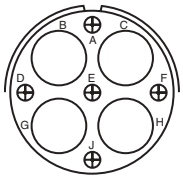

Insert Arrangement	**28-79**	**28-82**	**28-84**	**28-AY**
Service Rating	**A**	**D**	**A**	**A**
Number of Contacts	**7 9**	**2 4**	**9**	**4 5**
Contact Size	**8 16**	**8 12**	**8**	**4 16**

* Solderless

CONTACT LEGEND **16** **12** **8** **4** **0**

GT Series
contact arrangements

front face of pin insert or rear face of socket insert illustrated

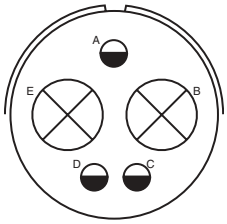

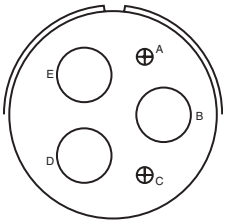

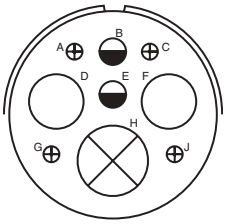

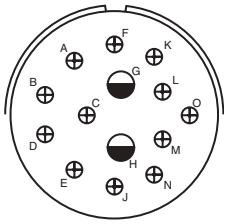

Insert Arrangement	**32-1**	**32-2**	**32-3**	**32-4**
Service Rating	**A = E; B, C, D, E = D**	**E**	**D**	**F, J, K, N = A:, Bal. = D**
Number of Contacts	**2 3**	**3 2**	**1 2 2 4**	**2 12**
Contact Size	**0 12**	**4 16**	**0 4 12 16**	**12 16**

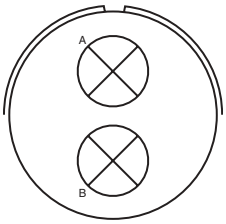

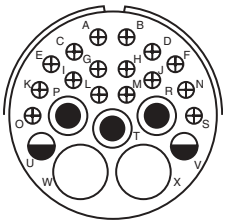

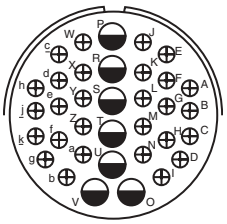

Insert Arrangement	**32-5**	**32-6**	**32-7**
Service Rating	**D**	**A**	**A, B, h, j = Inst.; Bal. = A**
Number of Contacts	**2**	**2 3 2 16**	**7 28**
Contact Size	**0**	**4 8 12 16**	**12 16**

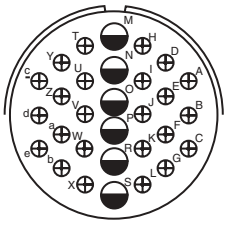

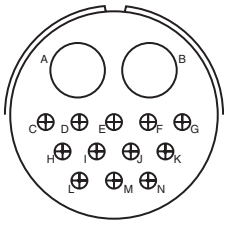

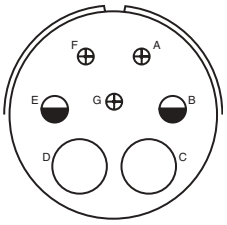

Insert Arrangement	**32-8**	**32-9**	**32-10**
Service Rating	**A**	**D**	**A, F = E; G = B; B, E = D; C, D = A**
Number of Contacts	**6 24**	**2 12**	**2 2 3**
Contact Size	**12 16**	**4 16**	**4 8 16**

CONTACT LEGEND **16 12 8 4 0**

GT Series
contact arrangements

front face of pin insert or rear face of socket insert illustrated

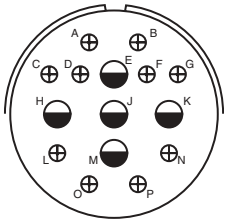

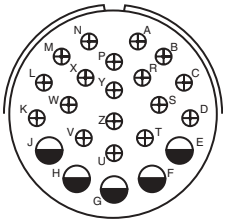

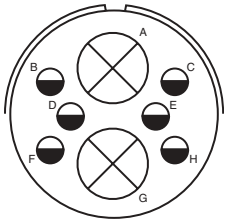

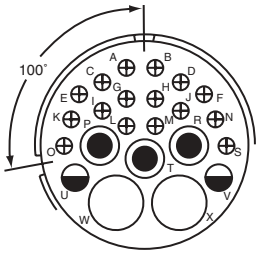

100° Rotation of 32-6

Insert Arrangement	**32-12**	**32-13**	**32-15**	**32-16**
Service Rating	**C, D, E, F, G = A; Bal. = D**	**D**	**D**	**A**
Number of Contacts	**5 10**	**5 18**	**2 6**	**2 3 2 16**
Contact Size	**12 16**	**12 16**	**0 12**	**4 8 12 16**

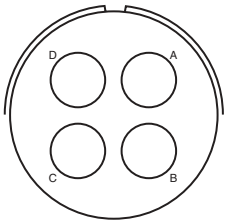

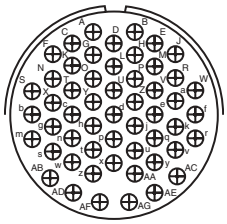

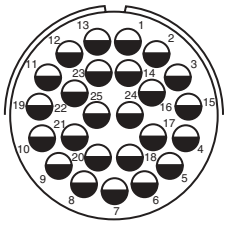

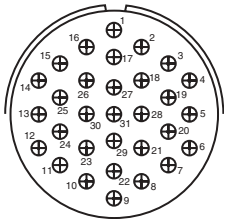

Insert Arrangement	**32-17**	**32-22**	**32-25**	**32-31**
Service Rating	**D**	**A**	**A**	**A**
Number of Contacts	**4**	**54**	**25**	**31**
Contact Size	**4**	**16**	**12**	**16**

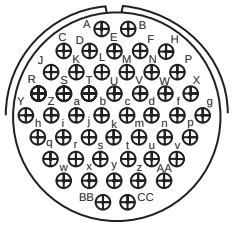

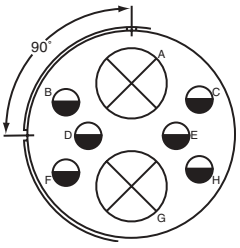

90° CW Rotation of 32-15

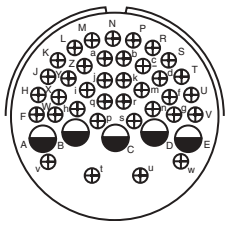

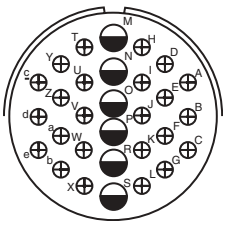

Insert Arrangement	**32-48**	**32-52**	**32-53**	**32-56**
Service Rating	**Inst.**	**D**	**t, u = E; Bal. = Inst.**	**A**
Number of Contacts	**48**	**2 6**	**5 37**	**24 6**
Contact Size	**16**	**0 12**	**12 16**	**16 12 for #10 wire**

CONTACT LEGEND	**16**	**12**	**8**	**4**	**0**

GT Series
contact arrangements

front face of pin insert or rear face of socket insert illustrated

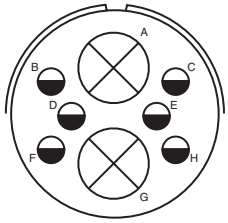

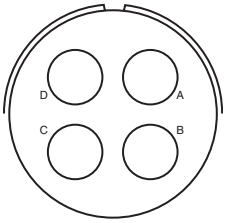

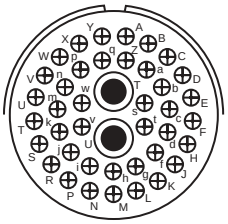

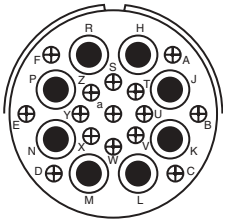

Insert Arrangement	**32-57**		**32-58**	**32-59**		**32-60**		
Service Rating	**		–	A		A		
Number of Contacts	6	2	4	40	2	15	8	
Contact Size	12	0 (Coax) RG-71/U	4 (Coax) RG-161/U or RG-179/U	16	8 (Coax) RG-161/U	16	8 (Coax) RG-124/U	

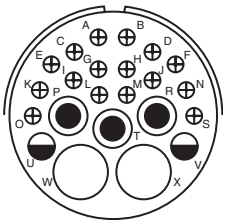

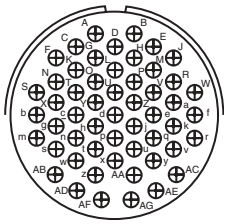

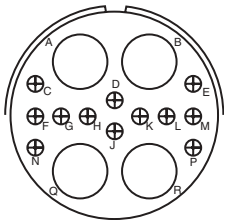

Insert Arrangement	**32-62**					**32-64**	**32-68**	
Service Rating	**					Inst.	A	
Number of Contacts	2	1	2	16	2	54	12	4
Contact Size	4	8	12	16	8 (Coax) RG-124/U	16	16	4 (Coax) RG-58C/U

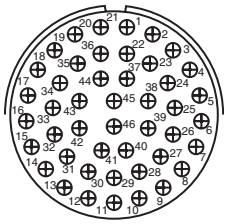

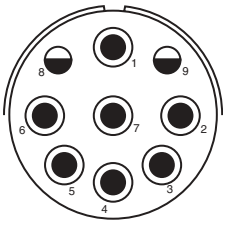

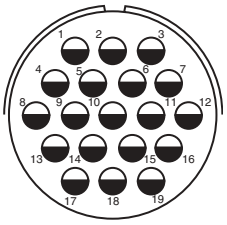

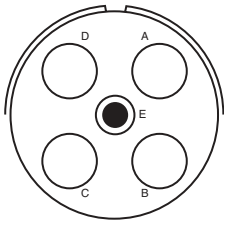

Insert Arrangement	**32-73**		**32-75**	**32-76**		**32-79**	
Service Rating	A		8, 9 = D	A		D	
Number of Contacts	46		2 7	19		4	1
Contact Size	16		12 8 (Coax) RG-180B/U	12		4	8

CONTACT LEGEND	**16**	**12**	**8**	**4**	**0**

** Consult Amphenol, Sidney, NY for service rating of power contacts.

GT Series
contact arrangements

front face of pin insert or rear face of socket insert illustrated

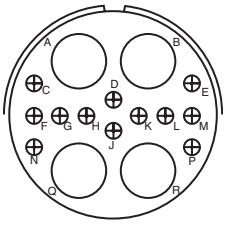
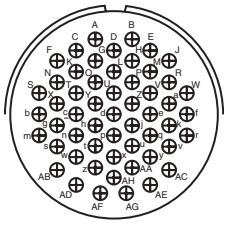
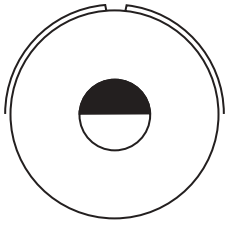
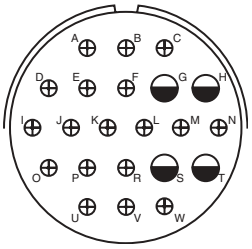

Insert Arrangement	**32-82**	**32-AF**	**32-AM**	**36-1**
Service Rating	**A**	**A**	**A**	**D**
Number of Contacts	**4 12**	**55**	**1**	**4 18**
Contact Size	**4 16**	**16**	**4/0**	**12 16**

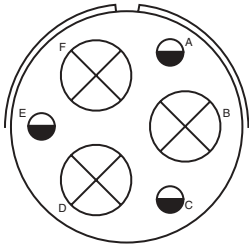
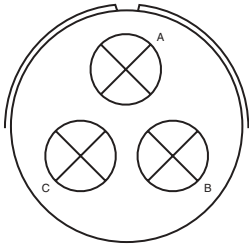
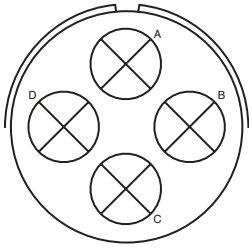

Insert Arrangement	**36-3**	**36-4**	**36-5**
Service Rating	**D**	**A = D; B, C = A**	**A**
Number of Contacts	**3 3**	**3**	**4**
Contact Size	**0 12**	**0**	**0**

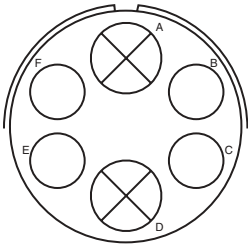
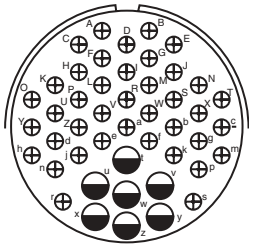
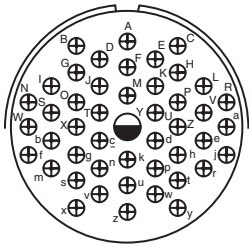

Insert Arrangement	**36-6**	**36-7**	**36-8**
Service Rating	**A**	**A**	**A**
Number of Contacts	**2 4**	**7 40**	**1 46**
Contact Size	**0 4**	**12 16**	**12 16**

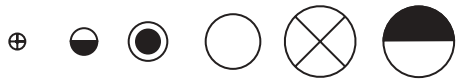

CONTACT LEGEND **16 12 8 4 0 4/0**

.

GT Series
contact arrangements

front face of pin insert or rear face of socket insert illustrated

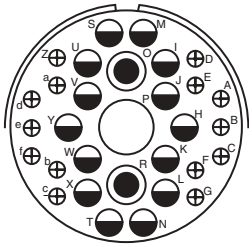

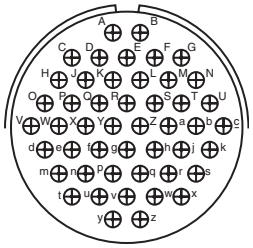

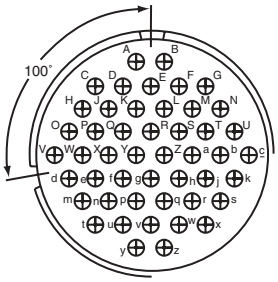

100° Rotation
of 36-10

Insert Arrangement	**36-9**	**36-10**	**36-11**
Service Rating	**A**	**A**	**A**
Number of Contacts	**1 2 14 14**	**48**	**48**
Contact Size	**4 8 12 16**	**16**	**16**

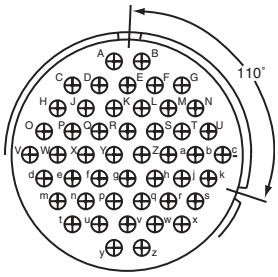

110° Rotation
of 36-10

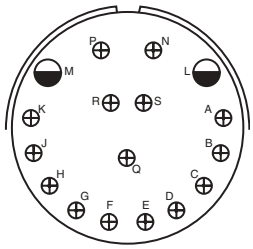

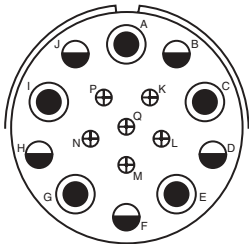

Insert Arrangement	**36-12**	**36-13**	**36-14**
Service Rating	**A**	**N, P, Q = E; Bal. = A**	**D**
Number of Contacts	**48**	**2 15**	**5 5 6**
Contact Size	**16**	**12 16**	**8 12 16**

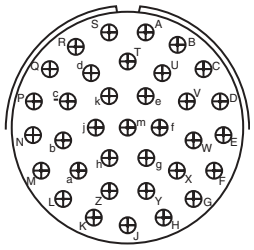

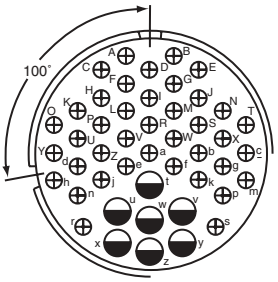

100° Rotation
of 36-7

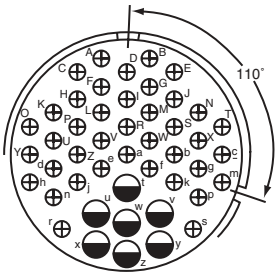

110° Rotation
of 36-7

Insert Arrangement	**36-15**	**36-16**	**36-17**
Service Rating	**M = D; Bal. = A**	**A**	**A**
Number of Contacts	**35**	**7 40**	**7 40**
Contact Size	**16**	**12 16**	**12 16**

CONTACT LEGEND	**16**	**12**	**8**	**4**	**0**

GT Series
contact arrangements

front face of pin insert or rear face of socket insert illustrated

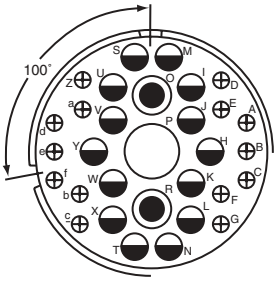

100° Rotation
of 36-9

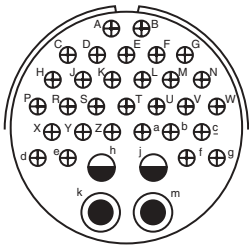

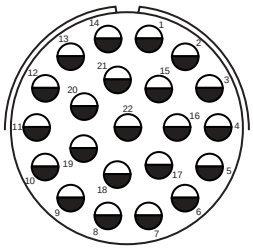

Insert Arrangement	**36-18**				**36-20**			**36-22**	
Service Rating	**A**				**A**			**D**	
Number of Contacts	**1**	**2**	**14**	**14**	**2**	**2**	**30**	**22**	
Contact Size	**4**	**8**	**12**	**16**	**8**	**12**	**16**	**12**	

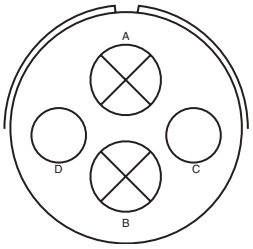

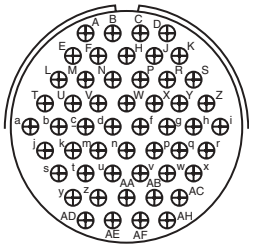

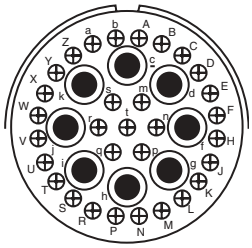

Insert Arrangement	**36-51**		**36-52**		**36-54**			
Service Rating	**D**		**A**		**A**			
Number of Contacts	**2**	**2**	**52**		**8**	**31**		
Contact Size	**0**	**4**	**16**		**8**	**16**		

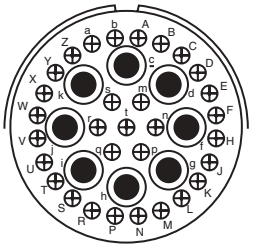

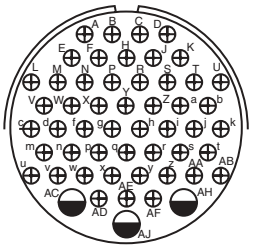

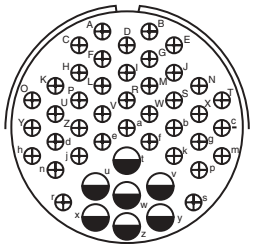

Insert Arrangement	**36-55**		**36-59**		**36-60**			
Service Rating	**A**		**A**		**A**			
Number of Contacts	**31**	**8**	**50**	**3**	**40**	**7**		
Contact Size	**16**	**8 for #6 wire**	**16**	**12 for #10 wire**	**16**	**12 for #10 wire**		

CONTACT LEGEND **16** **12** **8** **4** **0**

GT Series
contact arrangements

front face of pin insert or rear face of socket insert illustrated

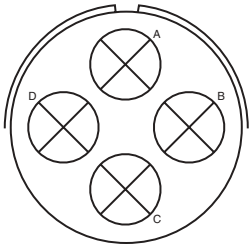

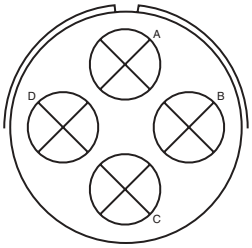

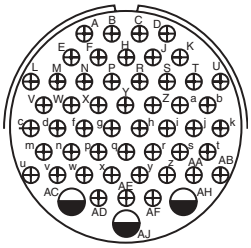

Insert Arrangement	**36-64**	**36-65**	**36-71**
Service Rating	**–**	**–**	**A**
Number of Contacts	**4**	**4**	**3 50**
Contact Size	**0 (Coax) RG-11/U RG-12/U, or RG-13/U**	**0 (Coax) RG-59/U, RG-62/U or RG-71/U**	**12 16**

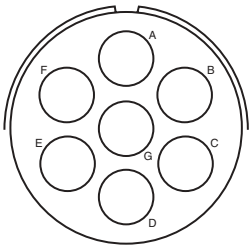

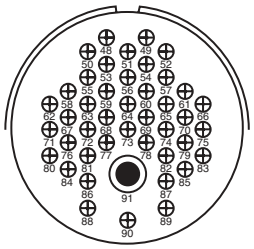

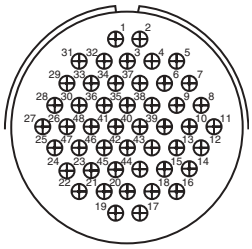

Insert Arrangement	**36-73**	**36-74**	**36-75**
Service Rating	**–**	**A**	**A**
Number of Contacts	**7**	**43 1**	**48**
Contact Size	**4 (Coax) RG-62B/U**	**16 8 (Coax) RG-187/B**	**16 for #14 wire**

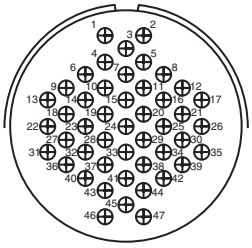

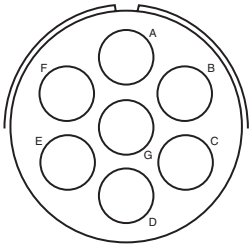

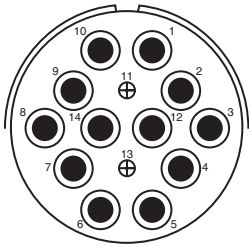

Insert Arrangement	**36-76**	**36-77**	**36-78**
Service Rating	**A**	**D**	**A**
Number of Contacts	**47**	**7**	**2 12**
Contact Size	**16**	**4**	**16 8**

CONTACT LEGEND **16** **12** **8** **4** **0**

GT Series
contact arrangements

front face of pin insert or rear face of socket insert illustrated

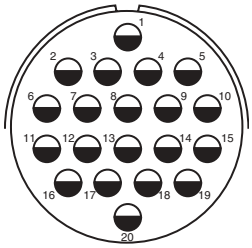

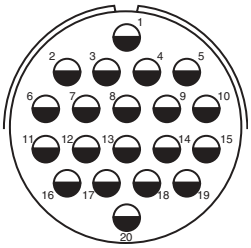

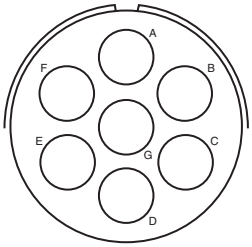

Insert Arrangement	**36-79**	**36-80**	**36-83**
Service Rating	**A**	**A**	**–**
Number of Contacts	**20**	**20**	**7**
Contact Size	**12**	**12 for #10 wire**	**4 (Coax) RG-58/U**

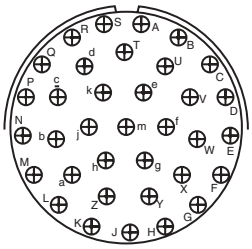

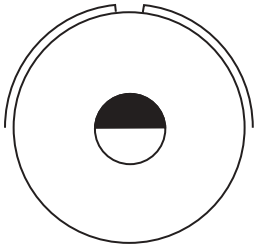

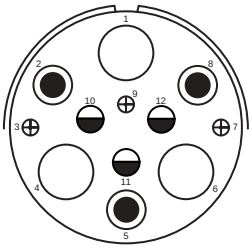

Insert Arrangement	**36-85**	**36-97**	**36-99**
Service Rating	**M = D; Bal. = A**	**C**	**D**
Number of Contacts	**35**	**1**	**3 3 3 3**
Contact Size	**16 for #12 wire**	**4/0**	**4 8 12 16**

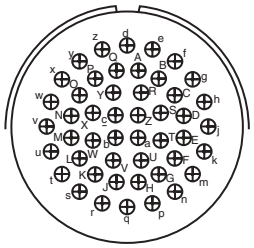

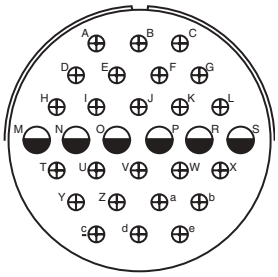

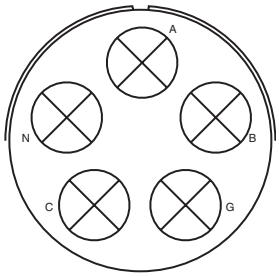

Insert Arrangement	**36-AF**	**40-1**	**40-5**
Service Rating	**A**	**D**	**A**
Number of Contacts	**48**	**6 24**	**5**
Contact Size	**16**	**12 16**	**0**

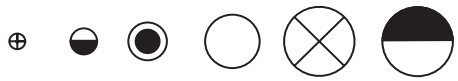

CONTACT LEGEND **16** **12** **8** **4** **0** **4/0**

GT Series
contact arrangements

front face of pin insert or rear face of socket insert illustrated

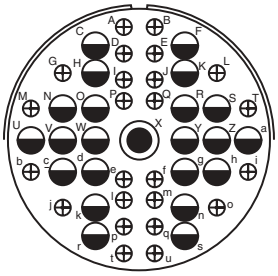

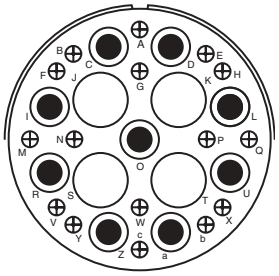

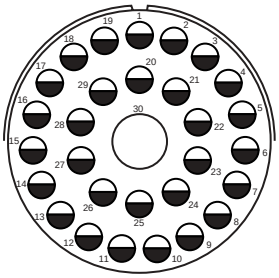

Insert Arrangement	**40-9**	**40-10**	**40-30**
Service Rating	**A**	**A**	**A**
Number of Contacts	**1 22 24**	**4 9 16**	**29 1**
Contact Size	**8 12 16**	**4 8 16**	**12 4**

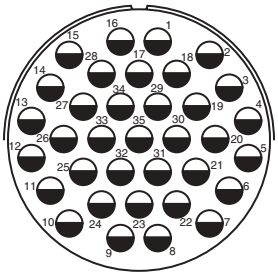

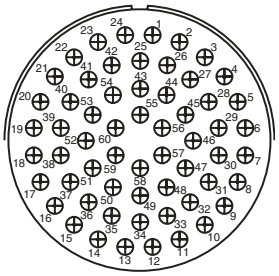

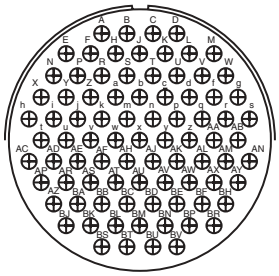

Insert Arrangement	**40-35**	**40-53**	**40-56**
Service Rating	**D**	**A**	**A**
Number of Contacts	**35**	**60**	**85**
Contact Size	**12**	**16**	**16**

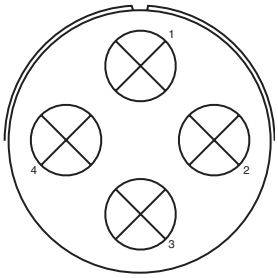

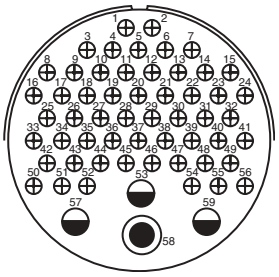

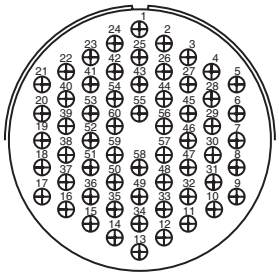

Insert Arrangement	**40-57**	**40-61**	**40-62**
Service Rating	**E**	**A**	**A**
Number of Contacts	**4**	**1 3 55**	**60**
Contact Size	**0**	**8 12 16**	**16**

CONTACT LEGEND **16 12 8 4 0**

GT Series
contact arrangements

front face of pin insert or rear face of socket insert illustrated

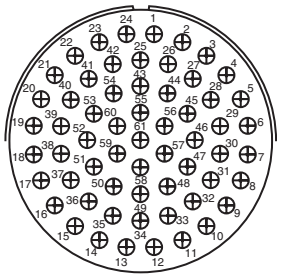

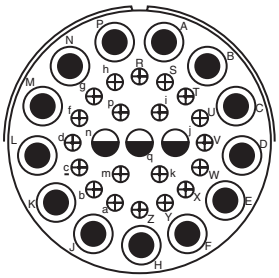

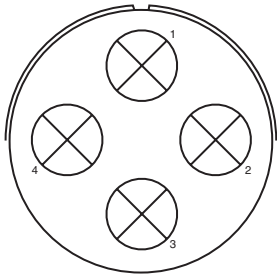

Insert Arrangement	**40-63**	**40-64**	**40-66**
Service Rating	**A**	**–**	**–**
Number of Contacts	**61**	**3 20 13**	**4**
Contact Size	**16 for #14 wire**	**12 16 8 (Coax) RG-124/U**	**0 (Coax) RG-63 B/U**

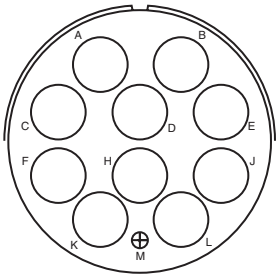

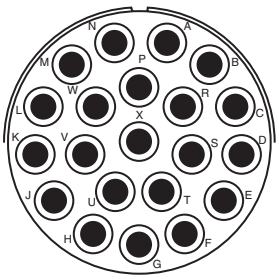

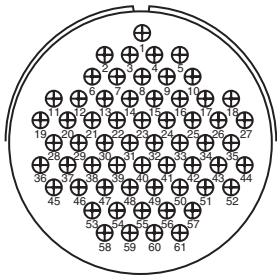

Insert Arrangement	**40-67**	**40-68**	**40-70**
Service Rating	**A**	**A**	**A**
Number of Contacts	**1 10**	**21**	**61**
Contact Size	**16 4 (Coax) RG-59/U**	**8**	**16**

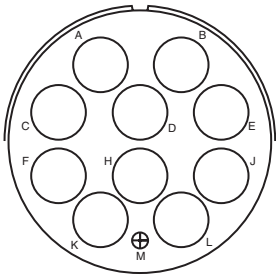

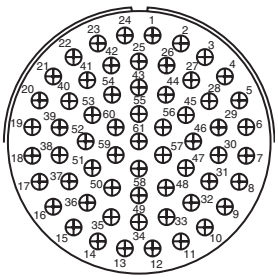

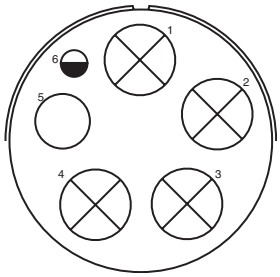

Insert Arrangement	**40-72**	**40-73**	**40-74**
Service Rating	**A**	**A**	**A**
Number of Contacts	**1 10**	**61**	**1 1 4**
Contact Size	**16 4 (Coax) RG-9B/U**	**16**	**12 4 (Coax) RG-62/U 0 (Coax) RG-9B/U or RG-214/U**

CONTACT LEGEND 16 12 8 4 0

GT Series
contact arrangements

front face of pin insert or rear face of socket insert illustrated

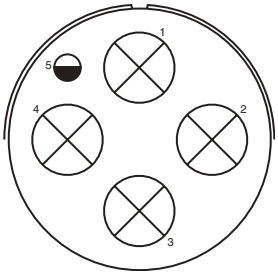

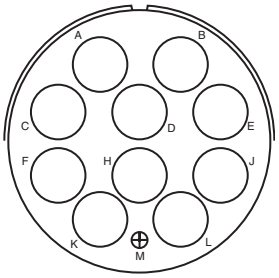

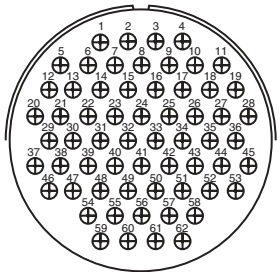

Insert Arrangement	**40-75**	**40-80**	**40-81**
Service Rating	**E**	**A**	**A**
Number of Contacts	**4 1**	**10 1**	**62**
Contact Size	**0 12**	**4 16**	**16 for #14 wire**

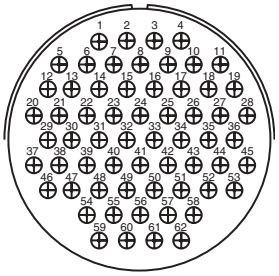

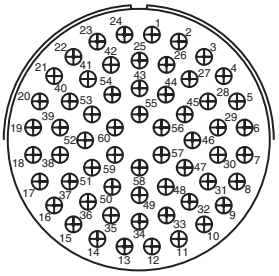

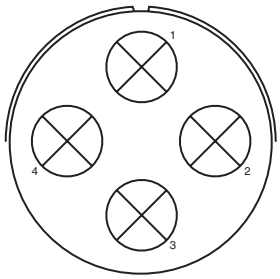

Insert Arrangement	**40-82**	**40-85**	**40-86**
Service Rating	**A**	**A**	**–**
Number of Contacts	**62**	**60**	**4**
Contact Size	**16**	**16 for #14 wire**	**0 (Coax) RG-115A/U**

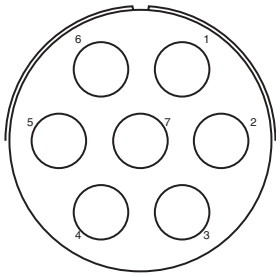

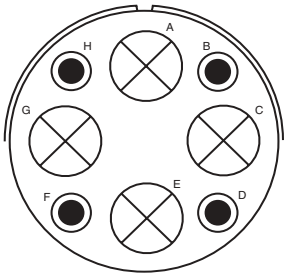

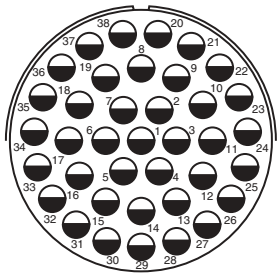

Insert Arrangement	**40-87**	**40-AD**	**40-AG**
Service Rating	**D**	**A**	**A**
Number of Contacts	**7**	**4 4**	**38**
Contact Size	**4**	**0 8**	**12**

CONTACT LEGEND **16** **12** **8** **4** **0**

GT Series
contact arrangements

front face of pin insert or rear face of socket insert illustrated

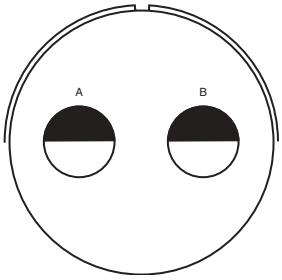

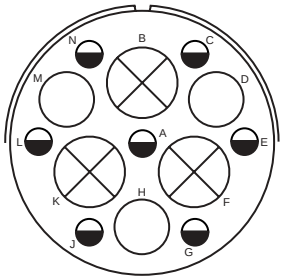

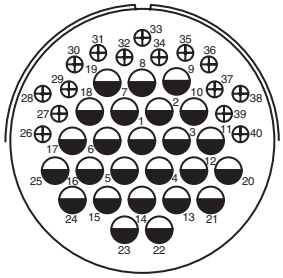

Insert Arrangement	**40-AP**	**40-AR**	**40-AS**
Service Rating	**E**	**Inst.**	**A**
Number of Contacts	**2**	**3 3 7**	**25 15**
Contact Size	**4/0**	**0 4 12**	**12 16**

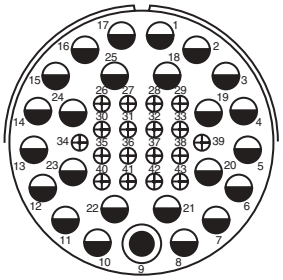

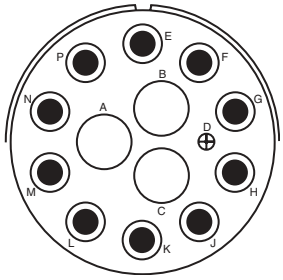

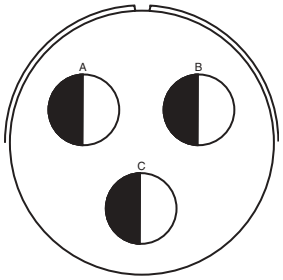

Insert Arrangement	**40-AT**	**40-AU**	**40-AV**
Service Rating	**A**	**A**	**D**
Number of Contacts	**1 24 18**	**3 10 1**	**3**
Contact Size	**8 12 16**	**4 8 16**	**2/0**

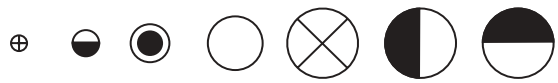

CONTACT LEGEND **16 12 8 4 0 2/0 4/0**

GT Connector Classes

GT00A
wall mount receptacle for front panel mounting

- **Four through mounting holes or optional threaded holes**
- **Includes backshell for accessory attachment**
- **Without grommet and cable clamp**
- **Non-environment proof**

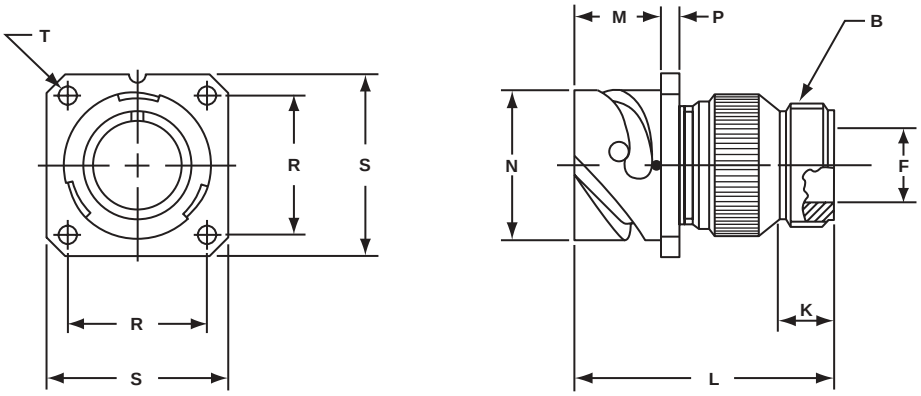

Inches

Shell Size	B Thread Class 2A	F Min.	K Min.	L Max.	M + .016 – .000	N + .000 – .006	P ± .008	R ± .004	S ± .012	T + .004 – .000
10SL	.6250-24 UNEF	.409	.374	1.969	.717	.717	.110	.717	1.000	.126
14S	.7500-20 UNEF	.520	.374	1.969	.717	.969	.126	.906	1.181	.126
16S	.8750-20 UNEF	.638	.374	1.969	.717	1.079	.126	.969	1.280	.126
16	.8750-20 UNEF	.638	.374	2.362	.846	1.079	.126	.969	1.280	.126
18	1.0000-20 UNEF	.756	.374	2.362	.907	1.213	.157	1.063	1.378	.126
20	1.1875-18 UNEF	.867	.374	2.362	.907	1.346	.157	1.157	1.496	.126
22	1.1875-18 UNEF	.965	.374	2.362	.907	1.472	.157	1.252	1.614	.126
24	1.4375-18 UNEF	1.094	.374	2.560	.907	1.610	.157	1.374	1.752	.146
28	1.4375-18 UNEF	1.228	.374	2.560	.947	1.839	.157	1.563	2.000	.146
32	1.7500-18 UNS	1.488	.433	2.560	.947	2.102	.157	1.752	2.244	.169
36	2.0000-18 UNS	1.780	.465	3.150	.947	2.346	.157	1.937	2.500	.169
40	2.2500-16 UN	2.016	.465	3.150	.947	2.579	.157	2.185	2.752	.169

Millimeters

Shell Size	F Min.	K Min.	L Max.	M + 0.4 – 0.0	N + 0.00 – 0.15	P ± 0.2	R ± 0.1	S ± 0.3	T + 0.1 – 0.0
10SL	10.4	9.5	50	18.2	18.2	2.8	18.2	25.4	3.2
14S	13.2	9.5	50	18.2	24.6	3.2	23.0	30.0	3.2
16S	16.2	9.5	50	18.2	27.4	3.2	24.6	32.5	3.2
16	16.2	9.5	60	21.5	27.4	3.2	24.6	32.5	3.2
18	19.2	9.5	60	23.0	30.8	4.0	27.0	35.0	3.2
20	22.0	9.5	60	23.0	34.2	4.0	29.4	38.0	3.2
22	24.5	9.5	60	23.0	37.4	4.0	31.8	41.0	3.2
24	27.8	9.5	65	23.0	40.9	4.0	34.9	44.5	3.7
28	31.2	9.5	65	24.1	46.7	4.0	39.7	50.8	3.7
32	37.8	11.0	65	24.1	53.4	4.0	44.5	57.0	4.3
36	45.2	11.8	80	24.1	59.6	4.0	49.2	63.5	4.3
40	51.2	11.8	80	24.1	65.5	4.0	55.5	69.9	4.3

All dimensions for reference only.

GT00AF/00F
wall mount receptacle for front panel mounting

GT00AF
- **Without grommet**
- **Cable clamp included**
- **Non-environment proof**
- **Four through mounting holes or optional threaded holes**

GT00F
- **With wire sealing grommet and cable clamp**
- **For use with individual wires**
- **Environment proof**
- **Four through mounting holes or optional threaded holes**

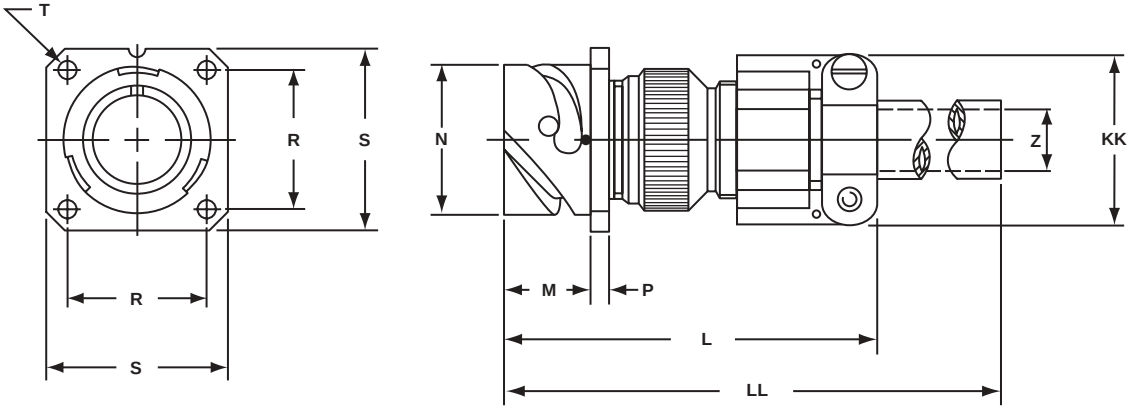

Inches

Shell Size	L Max.	M + .016 – .000	N + .000 – .006	P ± .008	R ± .004	S ± .012	T + .004 – .000	Z Max.	KK Max.	LL Max.
10SL	2.362	.717	.717	.110	.717	1.000	.126	.220	.894	4.720
14S	2.440	.717	.969	.126	.906	1.181	.126	.312	1.083	4.720
16S	2.756	.717	1.079	.126	.969	1.280	.126	.437	1.181	4.720
16	2.756	.846	1.079	.126	.969	1.280	.126	.437	1.181	4.921
18	3.031	.907	1.213	.157	1.063	1.378	.126	.562	1.300	4.921
20	3.031	.907	1.346	.157	1.157	1.496	.126	.625	1.476	4.921
22	3.031	.907	1.472	.157	1.252	1.614	.126	.625	1.476	4.921
24	3.346	.907	1.610	.157	1.374	1.752	.146	.750	1.705	4.921
28	3.346	.947	1.839	.157	1.563	2.000	.146	.750	1.705	4.921
32	3.346	.947	2.102	.157	1.752	2.244	.169	.937	2.035	4.921
36	4.134	.947	2.346	.157	1.937	2.500	.169	1.250	2.283	5.315
40	5.118	.947	2.579	.157	2.185	2.752	.169	1.375	2.579	5.709

Millimeters

Shell Size	L Max.	M + 0.4 – 0.0	N + 0.00 – 0.15	P ± 0.2	R ± 0.1	S ± 0.3	T + 0.1 – 0.0	Z Max.	KK Max.	LL Max.
10SL	60	18.2	18.2	2.8	18.2	25.4	3.2	5.58	22.7	120
14S	62	18.2	24.6	3.2	23.0	30.0	3.2	7.92	27.5	120
16S	70	18.2	27.4	3.2	24.6	32.5	3.2	11.09	30.0	120
16	70	21.5	27.4	3.2	24.6	32.5	3.2	11.09	30.0	125
18	77	23.0	30.8	4.0	27.0	35.0	3.2	14.27	33.0	125
20	77	23.0	34.2	4.0	29.4	38.0	3.2	15.87	37.5	125
22	77	23.0	37.4	4.0	31.8	41.0	3.2	15.87	37.5	125
24	85	23.0	40.9	4.0	34.9	44.5	3.7	19.05	43.3	125
28	85	24.1	46.7	4.0	39.7	50.8	3.7	19.05	43.3	125
32	85	24.1	53.4	4.0	44.5	57.0	4.3	23.79	51.7	125
36	105	24.1	59.6	4.0	49.2	63.5	4.3	31.75	58.0	135
40	130	24.1	65.5	4.0	55.5	69.9	4.3	34.92	65.5	145

All dimensions for reference only.

GT00CF/00CFZ
wall mount receptacle for front panel mounting

GT00CF
- **Without individual wire sealing grommet**
- **Environment proof**
- **Four through mounting holes or optional threaded holes**
- **Includes clamp to grip and seal jacketed cable**

GT00CFZ
- **Same as GT00CF except: individual wire sealing grommet included for added moisture protection**
- **Environment proof**
- **Four through mounting holes or optional threaded holes**
- **Includes clamp to grip and seal jacketed cable**

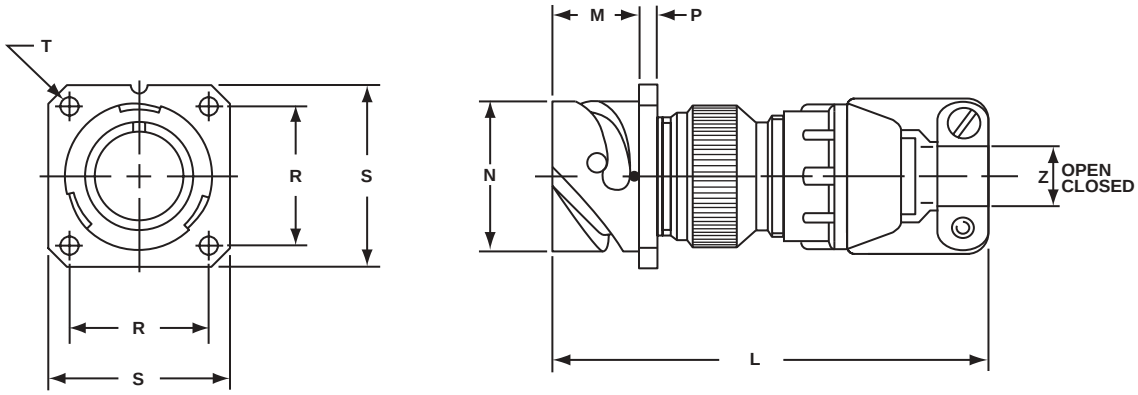

Inches

Shell Size	L Approx.	M + .016 – .000	N + .000 – .006	P ± .008	R ± .004	S ± .012	T + .004 – .000	Z Open	Z Closed
10SL	2.740	.717	.717	.110	.717	1.000	.126	.312	.094
14S	2.898	.717	.969	.126	.906	1.181	.126	.438	.230
16S	2.898	.717	1.079	.126	.969	1.280	.126	.531	.315
16	3.217	.846	1.079	.126	.969	1.280	.126	.531	.315
18	3.307	.907	1.213	.157	1.063	1.378	.126	.625	.378
20	3.311	.907	1.346	.157	1.157	1.496	.126	.748	.445
22	3.350	.907	1.472	.157	1.252	1.614	.126	.748	.445
24	3.484	.907	1.610	.157	1.374	1.752	.146	.937	.610
28	3.736	.947	1.839	.157	1.563	2.000	.146	.937	.610
32	4.142	.947	2.102	.157	1.752	2.244	.169	1.250	.921
36	4.390	.947	2.346	.157	1.937	2.500	.169	1.378	.921
40	4.988	.947	2.579	.157	2.185	2.752	.169	1.624	1.177

Millimeters

Shell Size	L Approx.	M + 0.4 – 0.0	N + 0.00 – 0.15	P ± 0.2	R ± 0.1	S ± 0.3	T + 0.1 – 0.0	Z Open	Z Closed
10SL	69.6	18.2	18.2	2.8	18.2	25.4	3.2	7.93	2.38
14S	73.6	18.2	24.6	3.2	23.0	30.0	3.2	11.12	5.84
16S	73.6	18.2	27.4	3.2	24.6	32.5	3.2	13.48	8.00
16	81.7	21.5	27.4	3.2	24.6	32.5	3.2	13.48	8.00
18	84.0	23.0	30.8	4.0	27.0	35.0	3.2	15.87	9.60
20	84.1	23.0	34.2	4.0	29.4	38.0	3.2	19.00	11.30
22	85.1	23.0	37.4	4.0	31.8	41.0	3.2	19.00	11.30
24	88.5	23.0	40.9	4.0	34.9	44.5	3.7	23.80	15.50
28	94.9	24.1	46.7	4.0	39.7	50.8	3.7	23.80	15.50
32	105.9	24.1	53.4	4.0	44.5	57.0	4.3	31.75	23.40
36	111.5	24.1	59.6	4.0	49.2	63.5	4.3	35.00	23.40
40	126.7	24.1	65.5	4.0	55.5	69.9	4.3	41.25	29.90

All dimensions for reference only.

GT00G
wall mount receptacle for front panel mounting

- **Four through mounting holes or optional threaded holes**
- **Includes backshell with individual wire sealing grommet**
- **For use with heat-shrink tubing**
- **Environment proof**

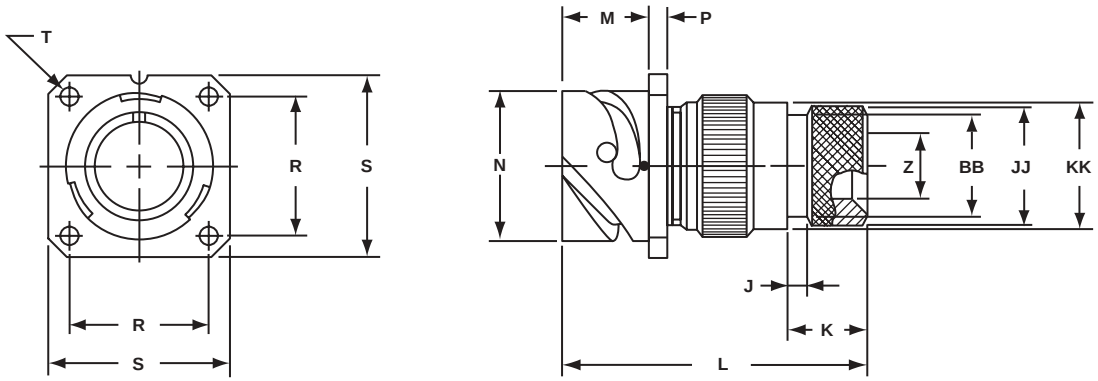

Inches

Shell Size	J ± .008	K ± .020	L Max.	M + .016 − .000	N + .000 − .006	P ± .008	R ± .004	S ± .012	T + .004 − .000	Z Min.	BB Max.	JJ ± .008	KK ± .008
10SL	.138	.461	1.969	.717	.717	.110	.717	1.000	.126	.303	.524	.610	.669
14S	.138	.461	1.969	.717	.969	.126	.906	1.181	.126	.417	.669	.752	.791
16S	.138	.461	1.969	.717	1.079	.126	.969	1.280	.126	.531	.862	.941	.925
16	.138	.453	2.362	.846	1.079	.126	.969	1.280	.126	.531	.862	.941	.925
18	.138	.453	2.362	.907	1.213	.157	1.063	1.378	.126	.575	.862	.941	1.043
20	.138	.500	2.559	.907	1.346	.157	1.157	1.496	.126	.736	1.031	1.165	1.189
22	.138	.500	2.559	.907	1.472	.157	1.252	1.614	.126	.819	1.031	1.165	1.323
24	.138	.500	2.559	.907	1.610	.157	1.374	1.752	.146	.969	1.358	1.488	1.421
28	.138	.500	2.559	.947	1.839	.157	1.563	2.000	.146	1.062	1.358	1.488	1.630
32	.138	.598	2.756	.947	2.102	.157	1.752	2.244	.169	1.311	1.717	1.882	1.913
36	.138	.598	3.150	.947	2.346	.157	1.937	2.500	.169	1.516	1.717	1.882	2.157
40	.138	.610	3.150	.947	2.579	.157	2.185	2.752	.169	1.898	2.071	2.276	2.402

Millimeters

Shell Size	J ± 0.2	K ± 0.5	L Max.	M + 0.4 − 0.0	N + 0.00 − 0.15	P ± 0.2	R ± 0.1	S ± 0.3	T + 0.1 − 0.0	Z Min.	BB Max.	JJ ± 0.2	KK ± 0.2
10SL	3.5	11.7	50	18.2	18.2	2.8	18.2	25.4	3.2	7.7	13.3	15.5	17.0
14S	3.5	11.7	50	18.2	24.6	3.2	23.0	30.0	3.2	10.6	17.0	19.1	20.1
16S	3.5	11.7	50	18.2	27.4	3.2	24.6	32.5	3.2	13.5	21.9	23.9	23.5
16	3.5	11.5	60	21.5	27.4	3.2	24.6	32.5	3.2	13.5	21.9	23.9	23.5
18	3.5	11.5	60	23.0	30.8	4.0	27.0	35.0	3.2	14.6	21.9	23.9	26.5
20	3.5	12.7	65	23.0	34.2	4.0	29.4	38.0	3.2	18.7	26.2	29.6	30.2
22	3.5	12.7	65	23.0	37.4	4.0	31.8	41.0	3.2	20.8	26.2	29.6	33.6
24	3.5	12.7	65	23.0	40.9	4.0	34.9	44.5	3.7	24.6	34.5	37.8	36.1
28	3.5	12.7	65	24.1	46.7	4.0	39.7	50.8	3.7	27.0	34.5	37.8	41.4
32	3.5	15.2	70	24.1	53.4	4.0	44.5	57.0	4.3	33.3	43.6	47.8	48.6
36	3.5	15.2	80	24.1	59.6	4.0	49.2	63.5	4.3	38.5	43.6	47.8	54.8
40	3.5	15.5	80	24.1	65.5	4.0	55.5	69.9	4.3	48.2	52.6	57.8	61.0

All dimensions for reference only.

GT00LCF/00LCFZ

wall mount receptacle for front panel mounting

GT00LCF

- **Includes a backshell with extended length to provide more working room for stripped jacketed cable**
- **Environment proof**
- **Four through mounting holes or optional threaded holes**
- **Includes clamp to grip and seal jacketed cable**

GT00LCFZ

- **Same as GT00LCF except: individual wire sealing grommet included for added moisture protection**
- **Environment proof**
- **Four through mounting holes or optional threaded holes**
- **Includes clamp to grip and seal jacketed cable**

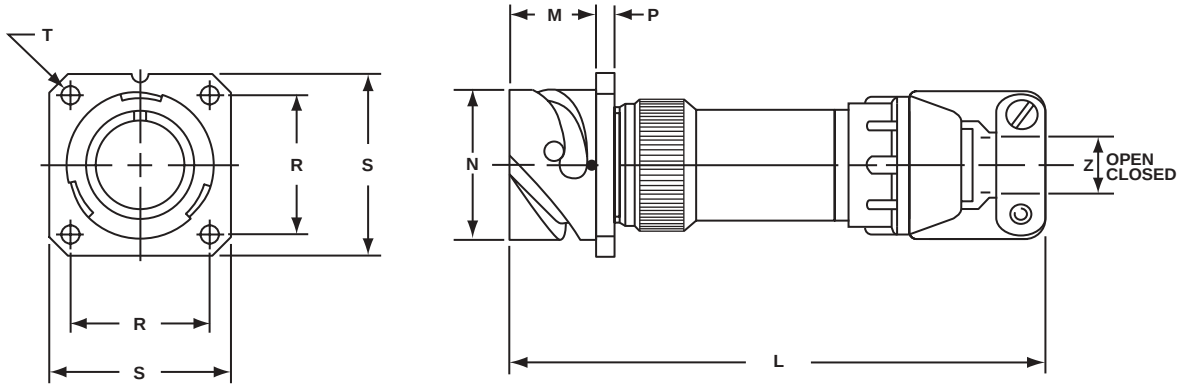

Inches

Shell Size	L Approx.	M + .016 – .000	N + .000 – .006	P ± .008	R ± .004	S ± .012	T + .004 – .000	Z Open	Z Closed
10SL	3.811	.717	.717	.110	.717	1.000	.126	.312	.094
14S	3.843	.717	.969	.126	.906	1.181	.126	.438	.230
16S	3.843	.717	1.079	.126	.969	1.280	.126	.531	.315
16	4.217	.846	1.079	.126	.969	1.280	.126	.531	.315
18	4.409	.907	1.213	.157	1.063	1.378	.126	.625	.378
20	4.409	.907	1.346	.157	1.157	1.496	.126	.748	.445
22	4.413	.907	1.472	.157	1.252	1.614	.126	.748	.445
24	4.535	.907	1.610	.157	1.374	1.752	.146	.937	.610
28	4.744	.947	1.839	.157	1.563	2.000	.146	.937	.610
32	5.079	.947	2.102	.157	1.752	2.244	.169	1.250	.921
36	5.327	.947	2.346	.157	1.937	2.500	.169	1.378	.921
40	5.327	.947	2.579	.157	2.185	2.752	.169	1.624	1.177

Millimeters

Shell Size	L Approx.	M + 0.4 – 0.0	N + 0.00 – 0.15	P ± 0.2	R ± 0.1	S ± 0.3	T + 0.1 – 0.0	Z Open	Z Closed
10SL	96.8	18.2	18.2	2.8	18.2	25.4	3.2	7.93	2.38
14S	97.6	18.2	24.6	3.2	23.0	30.0	3.2	11.12	5.84
16S	97.6	18.2	27.4	3.2	24.6	32.5	3.2	13.48	8.00
16	107.1	21.5	27.4	3.2	24.6	32.5	3.2	13.48	8.00
18	112.0	23.0	30.8	4.0	27.0	35.0	3.2	15.87	9.60
20	112.0	23.0	34.2	4.0	29.4	38.0	3.2	19.00	11.30
22	112.1	23.0	37.4	4.0	31.8	41.0	3.2	19.00	11.30
24	115.2	23.0	40.9	4.0	34.9	44.5	3.7	23.80	15.50
28	120.5	24.1	46.7	4.0	39.7	50.8	3.7	23.80	15.50
32	129.0	24.1	53.4	4.0	44.5	57.0	4.3	31.75	23.40
36	135.3	24.1	59.6	4.0	49.2	63.5	4.3	35.00	23.40
40	135.3	24.1	65.5	4.0	55.5	69.9	4.3	41.25	29.90

All dimensions for reference only.

GT00R
wall mount receptacle for front panel mounting

- **Four through mounting holes or optional threaded holes**
- **With individual wire sealing grommet**
- **Includes backshell for conduit termination**
- **Environment proof**

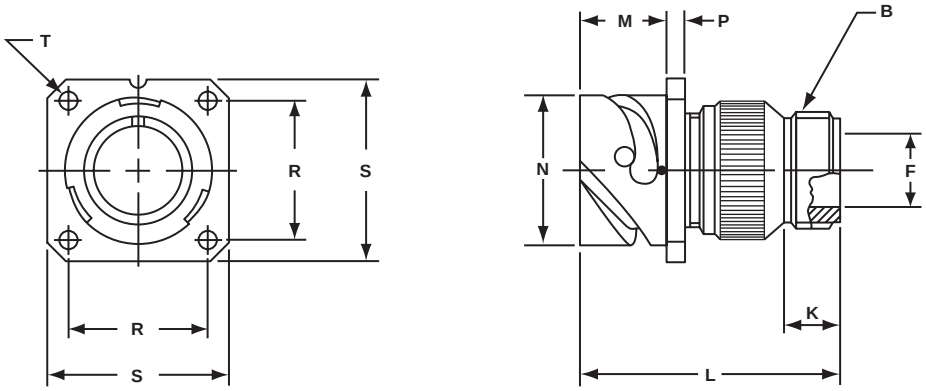

Inches

Shell Size	B Thread Class 2A	F Min.	K Min.	L Max.	M + .016 – .000	N + .000 – .006	P ± .008	R ± .004	S ± .012	T + .004 – .000
10SL	.6250-24 UNEF	.409	.374	1.969	.717	.717	.110	.717	1.000	.126
14S	.7500-20 UNEF	.520	.374	1.969	.717	.969	.126	.906	1.181	.126
16S	.8750-20 UNEF	.638	.374	1.969	.717	1.079	.126	.969	1.280	.126
16	.8750-20 UNEF	.638	.374	2.362	.846	1.079	.126	.969	1.280	.126
18	1.0000-20 UNEF	.756	.374	2.362	.907	1.213	.157	1.063	1.378	.126
20	1.1875-18 UNEF	.866	.374	2.362	.907	1.346	.157	1.157	1.496	.126
22	1.1875-18 UNEF	.965	.374	2.362	.907	1.472	.157	1.252	1.614	.126
24	1.4375-18 UNEF	1.094	.374	2.560	.907	1.610	.157	1.374	1.752	.146
28	1.4375-18 UNEF	1.228	.374	2.560	.947	1.839	.157	1.563	2.000	.146
32	1.7500-18 UNS	1.488	.433	2.560	.947	2.102	.157	1.752	2.244	.169
36	2.0000-18 UNS	1.780	.465	3.150	.947	2.346	.157	1.937	2.500	.169
40	2.2500-16 UN	2.016	.465	3.150	.947	2.579	.157	2.185	2.752	.169

Millimeters

Shell Size	F Min.	K Min.	L Max.	M + 0.4 – 0.0	N + 0.00 – 0.15	P ± 0.2	R ± 0.1	S ± 0.3	T + 0.1 – 0.0
10SL	10.4	9.5	50	18.2	18.2	2.8	18.2	25.4	3.2
14S	13.2	9.5	50	18.2	24.6	3.2	23.0	30.0	3.2
16S	16.2	9.5	50	18.2	27.4	3.2	24.6	32.5	3.2
16	16.2	9.5	60	21.5	27.4	3.2	24.6	32.5	3.2
18	19.2	9.5	60	23.0	30.8	4.0	27.0	35.0	3.2
20	22.0	9.5	60	23.0	34.2	4.0	29.4	38.0	3.2
22	24.5	9.5	60	23.0	37.4	4.0	31.8	41.0	3.2
24	27.8	9.5	65	23.0	40.9	4.0	34.9	44.5	3.7
28	31.2	9.5	65	24.1	46.7	4.0	39.7	50.8	3.7
32	37.8	11.0	65	24.1	53.4	4.0	44.5	57.0	4.3
36	45.2	11.8	80	24.1	59.6	4.0	49.2	63.5	4.3
40	51.2	11.8	80	24.1	65.5	4.0	55.5	69.9	4.3

All dimensions for reference only.

GT00RV

wall mount receptacle for front panel mounting

- **Four through mounting holes or optional threaded holes**
- **Includes wire sealing grommet**
- **For use with individual wires**
- **Environment proof**

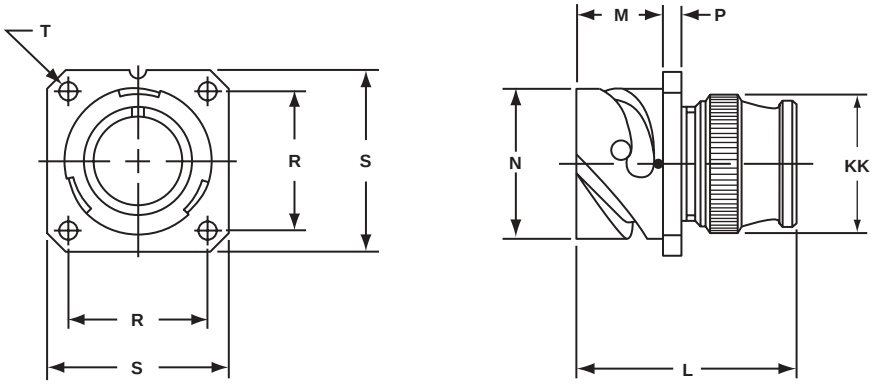

Inches

Shell Size	L Max.	M + .016 – .000	N + .000 – .006	P ± .008	R ± .004	S ± .012	T + .004 – .000	KK Max.
10SL	1.890	.717	.717	.110	.717	1.000	.126	.787
14S	1.890	.717	.969	.126	.906	1.181	.126	.945
16S	1.890	.717	1.079	.126	.969	1.280	.126	1.024
16	2.205	.846	1.079	.126	.969	1.280	.126	1.024
18	2.244	.907	1.213	.157	1.063	1.378	.126	1.161
20	2.244	.907	1.346	.157	1.157	1.496	.126	1.299
22	2.244	.907	1.472	.157	1.252	1.614	.126	1.417
24	2.244	.907	1.610	.157	1.374	1.752	.146	1.575
28	2.244	.947	1.839	.157	1.563	2.000	.146	1.811
32	2.362	.947	2.102	.157	1.752	2.244	.169	2.028
36	2.362	.947	2.346	.157	1.937	2.500	.169	2.283
40	2.362	.947	2.579	.157	2.185	2.752	.169	2.539

Millimeters

Shell Size	L Max.	M + 0.4 – 0.0	N + 0.00 – 0.15	P ± 0.2	R ± 0.1	S ± 0.3	T + 0.1 – 0.0	KK Max.
10SL	48.0	18.2	18.2	2.8	18.2	25.4	3.2	20.0
14S	48.0	18.2	24.6	3.2	23.0	30.0	3.2	24.0
16S	48.0	18.2	27.4	3.2	24.6	32.5	3.2	26.0
16	56.0	21.5	27.4	3.2	24.6	32.5	3.2	26.0
18	57.0	23.0	30.8	4.0	27.0	35.0	3.2	29.5
20	57.0	23.0	34.2	4.0	29.4	38.0	3.2	33.0
22	57.0	23.0	37.4	4.0	31.8	41.0	3.2	36.0
24	57.0	23.0	40.9	4.0	34.9	44.5	3.7	40.0
28	57.0	24.1	46.7	4.0	39.7	50.8	3.7	46.0
32	60.0	24.1	53.4	4.0	44.5	57.0	4.3	51.5
36	60.0	24.1	59.6	4.0	49.2	63.5	4.3	58.0
40	60.0	24.1	65.5	4.0	55.5	69.9	4.3	64.5

All dimensions for reference only.

GT01A
inline receptacle

- **Includes backshell for accessory attachment**
- **Without wire sealing grommet and cable clamp**
- **Non-environment proof**

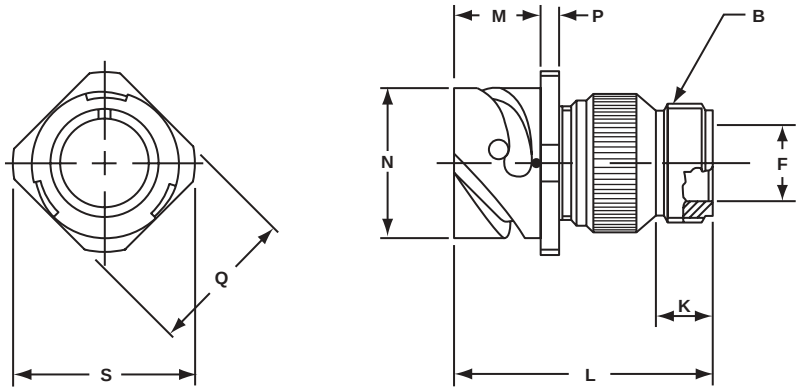

Inches

Shell Size	B Thread Class 2A	F Min.	K Min.	L Max.	M + .016 – .000	N + .000 – .006	P ± .008	Q ± .008	S Max.
10SL	.6250-24 UNEF	.409	.374	1.969	.717	.717	.110	.811	.992
14S	.7500-20 UNEF	.520	.374	1.969	.717	.969	.126	1.000	1.173
16S	.8750-20 UNEF	.638	.374	1.969	.717	1.079	.126	1.126	1.272
16	.8750-20 UNEF	.638	.374	2.362	.846	1.079	.126	1.126	1.272
18	1.0000-20 UNEF	.756	.374	2.362	.907	1.213	.157	1.248	1.370
20	1.1875-18 UNEF	.867	.374	2.362	.907	1.346	.157	1.374	1.488
22	1.1875-18 UNEF	.965	.374	2.362	.907	1.472	.157	1.500	1.618
24	1.4375-18 UNEF	1.094	.374	2.560	.907	1.610	.157	1.626	1.756
28	1.4375-18 UNEF	1.228	.374	2.560	.947	1.839	.157	1.874	2.004
32	1.7500-18 UNS	1.488	.433	2.560	.947	2.102	.157	2.126	2.248
36	2.0000-18 UNS	1.780	.465	3.150	.947	2.346	.157	2.386	2.504
40	2.2500-16 UN	2.016	.465	3.150	.947	2.579	.157	2.618	2.756

Millimeters

Shell Size	F Min.	K Min.	L Max.	M + 0.4 – 0.0	N + 0.00 – 0.15	P ± 0.2	Q ± 0.2	S Max.
10SL	10.4	9.5	50	18.2	18.2	2.8	20.6	25.2
14S	13.2	9.5	50	18.2	24.6	3.2	25.4	29.8
16S	16.2	9.5	50	18.2	27.4	3.2	28.6	32.3
16	16.2	9.5	60	21.5	27.4	3.2	28.6	32.3
18	19.2	9.5	60	23.0	30.8	4.0	31.7	34.8
20	22.0	9.5	60	23.0	34.2	4.0	34.9	37.8
22	24.5	9.5	60	23.0	37.4	4.0	38.1	41.1
24	27.8	9.5	65	23.0	40.9	4.0	41.3	44.6
28	31.2	9.5	65	24.1	46.7	4.0	47.6	50.9
32	37.8	11.0	65	24.1	53.4	4.0	54.0	57.1
36	45.2	11.8	80	24.1	59.6	4.0	60.6	63.6
40	51.2	11.8	80	24.1	65.5	4.0	66.5	70.0

All dimensions for reference only.

GT01AF/01F
inline receptacle

GT01AF
- **With cable clamp**
- **Wire sealing grommet not included**
- **Non-environment proof**

GT01F
- **With wire sealing grommet and cable clamp**
- **For use with individual wires**
- **Environment proof**

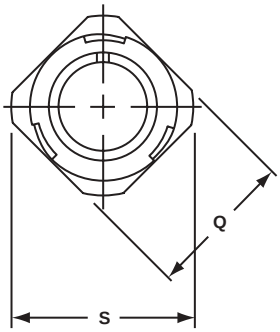

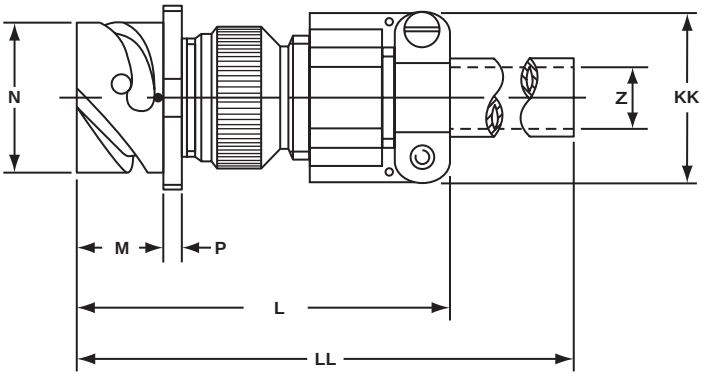

Inches

Shell Size	L Max.	M + .016 – .000	N + .000 – .006	P ± .008	Q ± .008	S Max.	Z Nominal	KK Max.	LL Max.
10SL	2.362	.717	.717	.110	.811	.992	.220	.894	4.720
14S	2.440	.717	.969	.126	1.000	1.173	.312	1.083	4.720
16S	2.756	.717	1.079	.126	1.126	1.272	.437	1.181	4.720
16	2.756	.846	1.079	.126	1.126	1.272	.437	1.181	4.921
18	3.031	.907	1.213	.157	1.248	1.370	.562	1.300	4.921
20	3.031	.907	1.346	.157	1.374	1.488	.625	1.476	4.921
22	3.031	.907	1.472	.157	1.500	1.618	.625	1.476	4.921
24	3.346	.907	1.610	.157	1.626	1.756	.750	1.705	4.921
28	3.346	.947	1.839	.157	1.874	2.004	.750	1.705	4.921
32	3.346	.947	2.102	.157	2.126	2.248	.937	2.035	4.921
36	4.134	.947	2.346	.157	2.386	2.504	1.250	2.283	5.315
40	5.118	.947	2.579	.157	2.618	2.756	1.375	2.579	5.709

Millimeters

Shell Size	L Max.	M + 0.4 – 0.0	N + 0.00 – 0.15	P ± 0.2	Q ± 0.2	S Max.	Z Nominal	KK Max.	LL Max.
10SL	60	18.2	18.2	2.8	20.6	25.2	5.58	22.7	120
14S	62	18.2	24.6	3.2	25.4	29.8	7.92	27.5	120
16S	70	18.2	27.4	3.2	28.6	32.3	11.09	30.0	120
16	70	21.5	27.4	3.2	28.6	32.3	11.09	30.0	125
18	77	23.0	30.8	4.0	31.7	34.8	14.27	33.0	125
20	77	23.0	34.2	4.0	34.9	37.8	15.87	37.5	125
22	77	23.0	37.4	4.0	38.1	41.1	15.87	37.5	125
24	85	23.0	40.9	4.0	41.3	44.6	19.05	43.3	125
28	85	24.1	46.7	4.0	47.6	50.9	19.05	43.3	125
32	85	24.1	53.4	4.0	54.0	57.1	23.79	51.7	125
36	105	24.1	59.6	4.0	60.6	63.6	31.75	58.0	135
40	130	24.1	65.5	4.0	66.5	70.0	34.92	65.5	145

All dimensions for reference only.

GT01G
inline receptacle

- **Includes wire sealing grommet**
- **For use with heat-shrink tubing**
- **Environment proof**

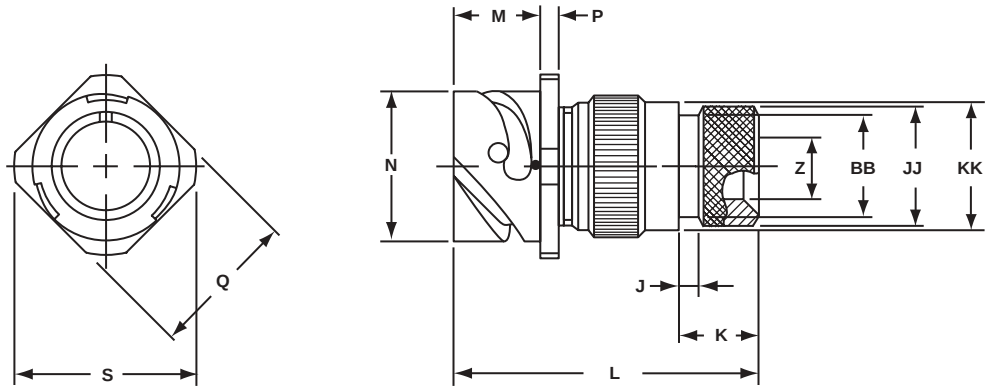

Inches

Shell Size	J ± .008	K ± .020	L Max.	M + .016 – .000	N + .000 – .006	P ± .008	Q ± .008	S Max.	Z Min.	BB Max.	JJ ± .008	KK ± .008
10SL	.138	.461	1.969	.717	.717	.110	.811	.992	.303	.524	.610	.669
14S	.138	.461	1.969	.717	.969	.126	1.000	1.173	.417	.669	.752	.791
16S	.138	.461	1.969	.717	1.079	.126	1.126	1.272	.531	.862	.941	.925
16	.138	.453	2.362	.846	1.079	.126	1.126	1.272	.531	.862	.941	.925
18	.138	.453	2.362	.907	1.213	.157	1.248	1.370	.575	.862	.941	1.043
20	.138	.500	2.559	.907	1.346	.157	1.374	1.488	.736	1.031	1.165	1.189
22	.138	.500	2.559	.907	1.472	.157	1.500	1.618	.819	1.031	1.165	1.323
24	.138	.500	2.559	.907	1.610	.157	1.626	1.756	.969	1.358	1.488	1.421
28	.138	.500	2.559	.947	1.839	.157	1.874	2.004	1.063	1.358	1.488	1.630
32	.138	.598	2.756	.947	2.102	.157	2.126	2.248	1.311	1.717	1.882	1.913
36	.138	.598	3.150	.947	2.346	.157	2.386	2.504	1.516	1.717	1.882	2.157
40	.138	.610	3.150	.947	2.579	1.57	2.618	2.756	1.898	2.071	2.276	2.402

Millimeters

Shell Size	J ± 0.2	K ± 0.5	L Max.	M + 0.4 – 0.0	N + 0.00 – 0.15	P ± 0.2	Q ± 0.2	S Max.	Z Min.	B Max.	JJ ± 0.2	KK ± 0.2
10SL	3.5	11.7	50	18.2	18.2	2.8	20.6	25.2	7.7	13.3	15.5	17.0
14S	3.5	11.7	50	18.2	24.6	3.2	25.4	29.8	10.6	17.0	19.1	20.1
16S	3.5	11.7	50	18.2	27.4	3.2	28.6	32.3	13.5	21.9	23.9	23.5
16	3.5	11.5	60	21.5	27.4	3.2	28.6	32.3	13.5	21.9	23.9	23.5
18	3.5	11.5	60	23.0	30.8	4.0	31.7	34.8	14.6	21.9	23.9	26.5
20	3.5	12.7	65	23.0	34.2	4.0	34.9	37.8	18.7	26.2	29.6	30.2
22	3.5	12.7	65	23.0	37.4	4.0	38.1	41.1	20.8	26.2	29.6	33.6
24	3.5	12.7	65	23.0	40.9	4.0	41.3	44.6	24.6	34.5	37.8	36.1
28	3.5	12.7	65	24.1	46.7	4.0	47.6	50.9	27.0	34.5	37.8	41.4
32	3.5	15.2	70	24.1	53.4	4.0	54.0	57.1	33.3	43.6	47.8	48.6
36	3.5	15.2	80	24.1	59.6	4.0	60.6	63.6	38.5	43.6	47.8	54.8
40	3.5	15.5	80	24.1	65.5	4.0	66.5	70.0	48.2	52.6	57.8	61.0

All dimensions for reference only.

GT01LCF/01LCFZ
inline receptacle

GT01LCF
- **Long backshell provides more working room for stripped jacketed cable**
- **Includes cable clamp to grip and seal jacketed cable**
- **Environment proof**

GT01LCFZ
- **Same as GT01LCF except: individual wire sealing grommet included for added moisture protection**
- **Environment proof**

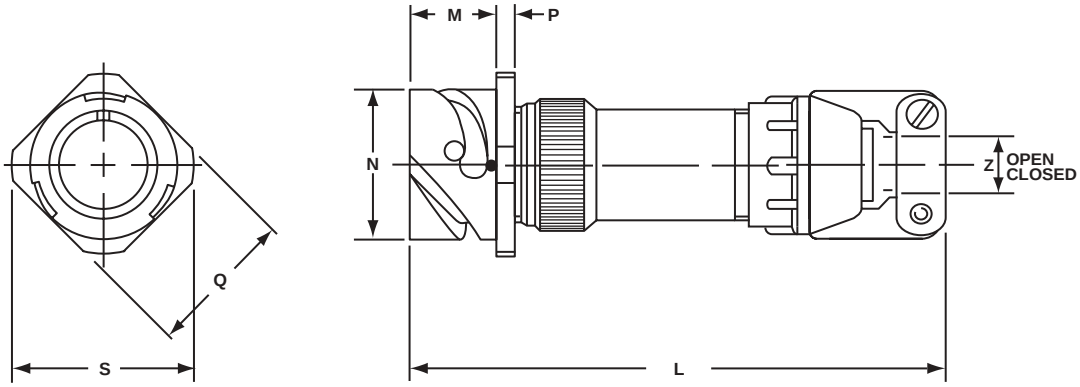

Inches

Shell Size	L Approx.	M + .016 – .000	N + .000 – .006	P ± .008	Q ± .008	S Max.	Z Open	Z Closed
10SL	3.811	.717	.717	.110	.811	.992	.312	.094
14S	3.843	.717	.969	.126	1.000	1.173	.438	.230
16S	3.843	.717	1.079	.126	1.126	1.272	.531	.315
16	4.217	.846	1.079	.126	1.126	1.272	.531	.315
18	4.409	.907	1.213	.157	1.248	1.370	.625	.378
20	4.409	.907	1.346	.157	1.374	1.488	.748	.445
22	4.413	.907	1.472	.157	1.500	1.618	.748	.445
24	4.535	.907	1.610	.157	1.626	1.756	.937	.610
28	4.744	.947	1.839	.157	1.874	2.004	.937	.610
32	5.079	.947	2.102	.157	2.126	2.248	1.250	.921
36	5.327	.947	2.346	.157	2.386	2.504	1.378	.921
40	5.327	.947	2.579	.157	2.618	2.756	1.624	1.177

Millimeters

Shell Size	L Approx.	M + 0.4 – 0.0	N + 0.00 – 0.15	P ± 0.2	Q ± 0.2	S Max.	Z Open	Z Closed
10SL	96.8	18.2	18.2	2.8	20.6	25.2	7.93	2.38
14S	97.6	18.2	24.6	3.2	25.4	29.8	11.12	5.84
16S	97.6	18.2	27.4	3.2	28.6	32.3	13.48	8.00
16	107.1	21.5	27.4	3.2	28.6	32.3	13.48	8.00
18	112.0	23.0	30.8	4.0	31.7	34.8	15.87	9.60
20	112.0	23.0	34.2	4.0	34.9	37.8	19.00	11.30
22	112.1	23.0	37.4	4.0	38.1	41.1	19.00	11.30
24	115.2	23.0	40.9	4.0	41.3	44.6	23.80	15.50
28	120.5	24.1	46.7	4.0	47.6	50.9	23.80	15.50
32	129.0	24.1	53.4	4.0	54.0	57.1	31.75	23.40
36	135.3	24.1	59.6	4.0	60.6	63.6	35.00	23.40
40	135.3	24.1	65.5	4.0	66.5	70.0	41.25	29.90

All dimensions for reference only.

GT01R
inline receptacle

- **With individual wire sealing grommet**
- **Includes backshell for conduit termination**
- **Environment proof**

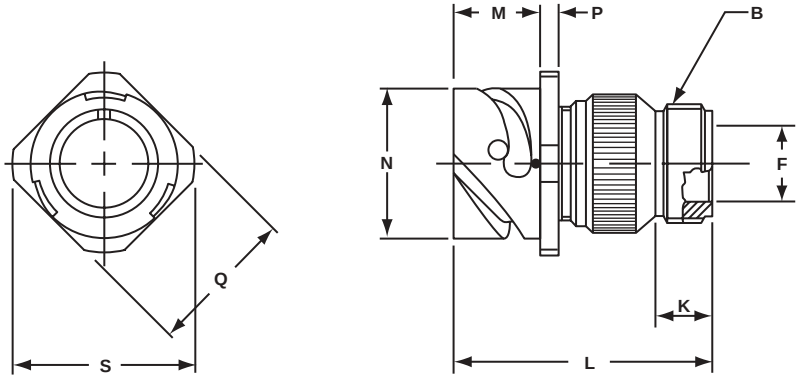

Inches

Shell Size	B Thread Class 2A	F Min.	K Min.	L Max.	M + .016 – .000	N + .000 – .006	P ± .008	Q ± .008	S Max.
10SL	.6250-24 UNEF	.409	.374	1.969	.717	.717	.110	.811	.992
14S	.7500-20 UNEF	.520	.374	1.969	.717	.969	.126	1.000	1.173
16S	.8750-20 UNEF	.638	.374	1.969	.717	1.079	.126	1.126	1.272
16	.8750-20 UNEF	.638	.374	2.362	.846	1.079	.126	1.126	1.272
18	1.0000-20 UNEF	.756	.374	2.362	.907	1.213	.157	1.248	1.370
20	1.1875-18 UNEF	.867	.374	2.362	.907	1.346	.157	1.374	1.488
22	1.1875-18 UNEF	.965	.374	2.362	.907	1.472	.157	1.500	1.618
24	1.4375-18 UNEF	1.094	.374	2.560	.907	1.610	.157	1.626	1.756
28	1.4375-18 UNEF	1.228	.374	2.560	.947	1.839	.157	1.874	2.004
32	1.7500-18 UNS	1.488	.433	2.560	.947	2.102	.157	2.126	2.248
36	2.0000-18 UNS	1.780	.465	3.150	.947	2.346	.157	2.386	2.504
40	2.2500-16 UN	2.016	.465	3.150	.947	2.579	.157	2.618	2.756

Millimeters

Shell Size	F Min.	K Min.	L Max.	M + 0.4 – 0.0	N + 0.00 – 0.15	P ± 0.2	Q ± 0.2	S Max.
10SL	10.4	9.5	50	18.2	18.2	2.8	20.6	25.2
14S	13.2	9.5	50	18.2	24.6	3.2	25.4	29.8
16S	16.2	9.5	50	18.2	27.4	3.2	28.6	32.3
16	16.2	9.5	60	21.5	27.4	3.2	28.6	32.3
18	19.2	9.5	60	23.0	30.8	4.0	31.7	34.8
20	22.0	9.5	60	23.0	34.2	4.0	34.9	37.8
22	24.5	9.5	60	23.0	37.4	4.0	38.1	41.1
24	27.8	9.5	65	23.0	40.9	4.0	41.3	44.6
28	31.2	9.5	65	24.1	46.7	4.0	47.6	50.9
32	37.8	11.0	65	24.1	53.4	4.0	54.0	57.1
36	45.2	11.8	80	24.1	59.6	4.0	60.6	63.6
40	51.2	11.8	80	24.1	65.5	4.0	66.5	70.0

All dimensions for reference only.

GT01RV
inline receptacle

- **Includes wire sealing grommet**
- **For use with individual wires**
- **Environment proof**

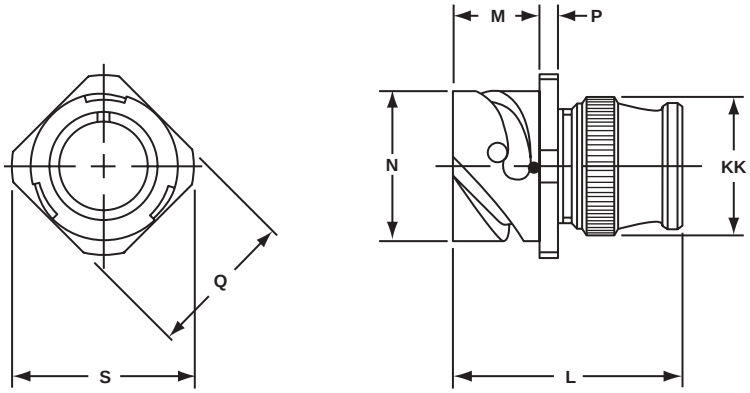

Inches

Shell Size	L Max.	M + .016 – .000	N + .000 – .006	P ± .008	Q ± .008	S Max.	KK Max.
10SL	1.890	.717	.717	.110	.811	.992	.787
14S	1.890	.717	.969	.126	1.000	1.173	.945
16S	1.890	.717	1.079	.126	1.126	1.272	1.024
16	2.205	.846	1.079	.126	1.126	1.272	1.024
18	2.244	.907	1.213	.157	1.248	1.370	1.161
20	2.244	.907	1.346	.157	1.374	1.488	1.299
22	2.244	.907	1.472	.157	1.500	1.618	1.417
24	2.244	.907	1.610	.157	1.626	1.756	1.575
28	2.244	.947	1.839	.157	1.874	2.004	1.811
32	2.362	.947	2.102	.157	2.126	2.248	2.028
36	2.362	.947	2.346	.157	2.386	2.504	2.283
40	2.362	.947	2.579	.157	2.618	2.756	2.539

Millimeters

Shell Size	L Max.	M + 0.4 – 0.0	N + 0.00 – 0.15	P ± 0.2	Q ± 0.2	S Max.	KK Max.
10SL	48.0	18.2	18.2	2.8	20.6	25.2	20.0
14S	48.0	18.2	24.6	3.2	25.4	29.8	24.0
16S	48.0	18.2	27.4	3.2	28.6	32.3	26.0
16	56.0	21.5	27.4	3.2	28.6	32.3	26.0
18	57.0	23.0	30.8	4.0	31.7	34.8	29.5
20	57.0	23.0	34.2	4.0	34.9	37.8	33.0
22	57.0	23.0	37.4	4.0	38.1	41.1	36.0
24	57.0	23.0	40.9	4.0	41.3	44.6	40.0
28	57.0	24.1	46.7	4.0	47.6	50.9	46.0
32	60.0	24.1	53.4	4.0	54.0	57.1	51.5
36	60.0	24.1	59.6	4.0	60.6	63.6	58.0
40	60.0	24.1	65.5	4.0	66.5	70.0	64.5

All dimensions for reference only.

GT02R/02RFS
box mount receptacle for front panel mounting

GT02R
- **Environment proof when mounted with proper panel sealing gasket (see page 79)**
- **For rear mounting information see page 85**

GT02RFS
- **Same as GT02R except mounting holes are countersunk to allow mating of plugs with rubber covered coupling nuts**

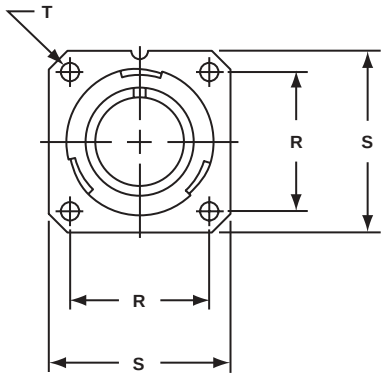

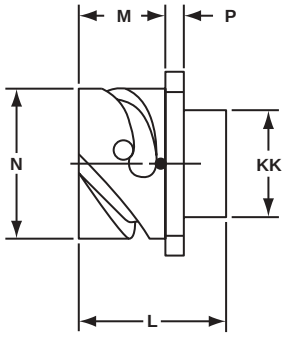

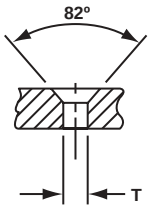

GT02RFS
Countersunk holes required when mating with GT06CFGG, page 55 and GT08CFGG, page 73

Inches

Shell Size	L ± .012	M + .016 − .000	N + .000 − .006	P ± .008	R ± .004	S ± .012	T + .004 − .000	KK Max.
10SL	1.087	.717	.717	.110	.717	1.000	.126	.626
14S	1.087	.717	.969	.126	.906	1.181	.126	.756
16S	1.087	.717	1.079	.126	.969	1.280	.126	.882
16	1.331	.846	1.079	.126	.969	1.280	.126	.882
18	1.331	.907	1.213	.157	1.063	1.378	.126	1.008
20	1.331	.907	1.346	.157	1.157	1.496	.126	1.142
22	1.331	.907	1.472	.157	1.252	1.614	.126	1.268
24	1.331	.907	1.610	.157	1.374	1.752	.146	1.390
28	1.406	.947	1.839	.157	1.563	2.000	.146	1.630
32	1.469	.947	2.102	.157	1.752	2.244	.169	1.882
36	1.469	.947	2.346	.157	1.937	2.500	.169	2.063
40	1.469	.947	2.579	.157	2.185	2.752	.169	2.323

Shell Size	L ± 0.3	M + 0.4 − 0.0	N + 0.00 − 0.15	P ± 0.2	R ± 0.1	S ± 0.3	T + 0.1 − 0.0	KK Max.
10SL	27.6	18.2	18.2	2.8	18.2	25.4	3.2	15.9
14S	27.6	18.2	24.6	3.2	23.0	30.0	3.2	19.2
16S	27.6	18.2	27.4	3.2	24.6	32.5	3.2	22.4
16	33.8	21.5	27.4	3.2	24.6	32.5	3.2	22.4
18	33.8	23.0	30.8	4.0	27.0	35.0	3.2	25.6
20	33.8	23.0	34.2	4.0	29.4	38.0	3.2	29.0
22	33.8	23.0	37.4	4.0	31.8	41.0	3.2	32.2
24	33.8	23.0	40.9	4.0	34.9	44.5	3.7	35.3
28	35.7	24.1	46.7	4.0	39.7	50.8	3.7	41.4
32	37.3	24.1	53.4	4.0	44.5	57.0	4.3	47.8
36	37.3	24.1	59.6	4.0	49.2	63.5	4.3	52.4
40	37.3	24.1	65.5	4.0	55.5	69.9	4.3	59.0

All dimensions for reference only.

GT020R/020RFSM
box mount receptacle for front panel mounting

GT020R
- **Threaded rear to accept accessory hardware**
- **Environment proof when mounted with proper panel sealing gasket (see page 79)**
- **For rear mounting information see page 85**

GT020RFSM
- **Same as GT020R except mounting holes are countersunk to allow mating of plugs with rubber covered coupling nuts**

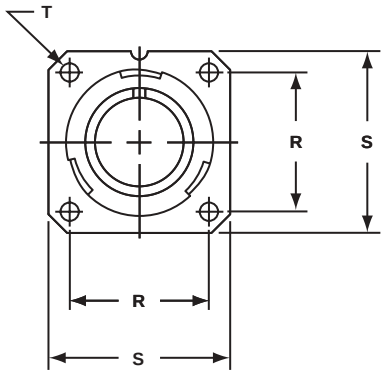

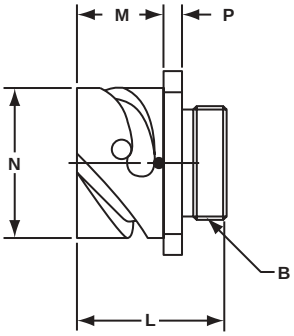

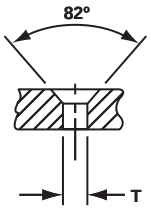

GT020RFSM
Countersunk holes required when mating with GT06CFGG, page 55 and GT08CFGG, page 73

Inches

Shell Size	B Thread Class 2A	L ± .012	M + .016 – .000	N + .000 – .006	P ± .008	R ± .004	S ± .012	T + .004 – .000
10SL	.6250-24UNEF	1.087	.717	.717	.110	.717	1.000	.126
14S	.7500-20UNEF	1.087	.717	.969	.126	.906	1.181	.126
16S	.8750-20UNEF	1.087	.717	1.079	.126	.969	1.280	.126
16	.8750-20UNEF	1.331	.846	1.079	.126	.969	1.280	.126
18	1.0000-20UNEF	1.331	.907	1.213	.157	1.063	1.378	.126
20	1.1250-18UNEF	1.331	.907	1.346	.157	1.157	1.496	.126
22	1.2500-18UNEF	1.331	.907	1.472	.157	1.252	1.614	.126
24	1.3750-18UNEF	1.331	.907	1.610	.157	1.374	1.752	.146
28	1.6250-18UNEF	1.406	.947	1.839	.157	1.563	2.000	.146
32	1.8750-16UN	1.469	.947	2.102	.157	1.752	2.244	.169
36	2.0625-16UN	1.469	.947	2.346	.157	1.937	2.500	.169
40	2.3125-16UN	1.469	.947	2.579	.157	2.185	2.752	.169

Millimeters

Shell Size	L ± 0.3	M + 0.4 – 0.0	N + 0.00 – 0.15	P ± 0.2	R ± 0.1	S ± 0.3	T + 0.1 – 0.0
10SL	27.6	18.2	18.2	2.8	18.2	25.4	3.2
14S	27.6	18.2	24.6	3.2	23.0	30.0	3.2
16S	27.6	18.2	27.4	3.2	24.6	32.5	3.2
16	33.8	21.5	27.4	3.2	24.6	32.5	3.2
18	33.8	23.0	30.8	4.0	27.0	35.0	3.2
20	33.8	23.0	34.2	4.0	29.4	38.0	3.2
22	33.8	23.0	37.4	4.0	31.8	41.0	3.2
24	33.8	23.0	40.9	4.0	34.9	44.5	3.7
28	35.7	24.1	46.7	4.0	39.7	50.8	3.7
32	37.3	24.1	53.4	4.0	44.5	57.0	4.3
36	37.3	24.1	59.6	4.0	49.2	63.5	4.3
40	37.3	24.1	65.5	4.0	55.5	69.9	4.3

All dimensions for reference only.

GT030
square flange receptacle for rear panel mounting

- **Four through mounting holes or optional threaded holes**
- **Threaded rear to accept accessory attachment**
- **Environment proof when mounted with a proper sealing gasket (see page 79)**

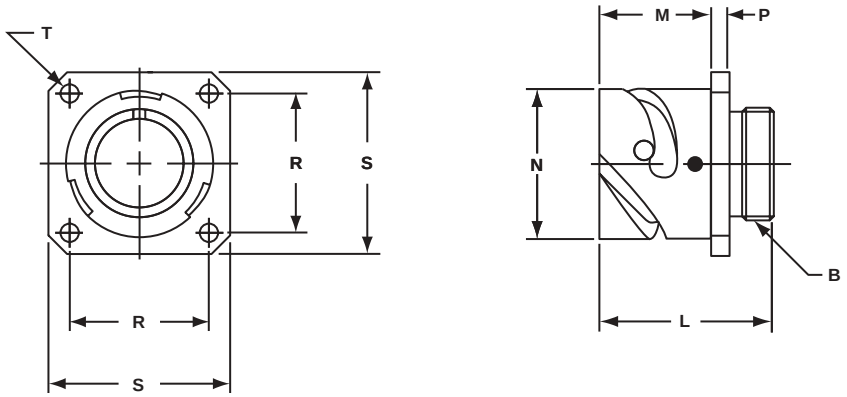

Inches

Shell Size	B Thread Class 2A	L ± .012	M + .016 − .000	N + .000 − .006	P ± .008	R ± .004	S ± .012	T + .004 − .000
10SL	.6250-24UNEF	1.087	.717	.717	.110	.717	1.000	.126
14S	.7500-20UNEF	1.087	.717	.969	.126	.906	1.181	.126
16S	.8750-20UNEF	1.087	.717	1.079	.126	.969	1.280	.126
16	.8750-20UNEF	1.331	.846	1.079	.126	.969	1.280	.126
18	1.0000-20UNEF	1.331	.907	1.213	.157	1.063	1.378	.126
20	1.1250-18UNEF	1.331	.907	1.346	.157	1.157	1.496	.126
22	1.2500-18UNEF	1.331	.907	1.472	.157	1.252	1.614	.126
24	1.3750-18UNEF	1.331	.907	1.610	.157	1.374	1.752	.146
28	1.6250-18UNEF	1.406	.947	1.839	.157	1.563	2.000	.146
32	1.8750-16UN	1.469	.947	2.102	.157	1.752	2.244	.169
36	2.0625-16UN	1.469	.947	2.346	.157	1.937	2.500	.169
40	2.3125-16UN	1.469	.947	2.579	.157	2.185	2.752	.169

Millimeters

Shell Size	L ± 0.3	M + 0.4 − 0.0	N + 0.00 − 0.15	P ± 0.2	R ± 0.1	S ± 0.3	T + 0.1 − 0.0
10SL	27.6	18.2	18.2	2.8	18.2	25.4	3.2
14S	27.6	18.2	24.6	3.2	23.0	30.0	3.2
16S	27.6	18.2	27.4	3.2	24.6	32.5	3.2
16	33.8	21.5	27.4	3.2	24.6	32.5	3.2
18	33.8	23.05	30.8	4.0	27.0	35.0	3.2
20	33.8	23.05	34.2	4.0	29.4	38.0	3.2
22	33.8	23.05	37.4	4.0	31.8	41.0	3.2
24	33.8	23.05	40.9	4.0	34.9	44.5	3.7
28	35.7	24.05	46.7	4.0	39.7	50.8	3.7
32	37.3	24.05	53.4	4.0	44.5	57.0	4.3
36	37.3	24.05	59.6	4.0	49.2	63.5	4.3
40	37.3	24.05	65.5	4.0	55.5	69.9	4.3

All dimensions for reference only.

GT030A

square flange receptacle for rear panel mounting

- **Four through mounting holes or optional threaded holes**
- **Backshell included for accessory attachment**
- **Without a wire sealing grommet and cable clamp**
- **Non-environment proof**

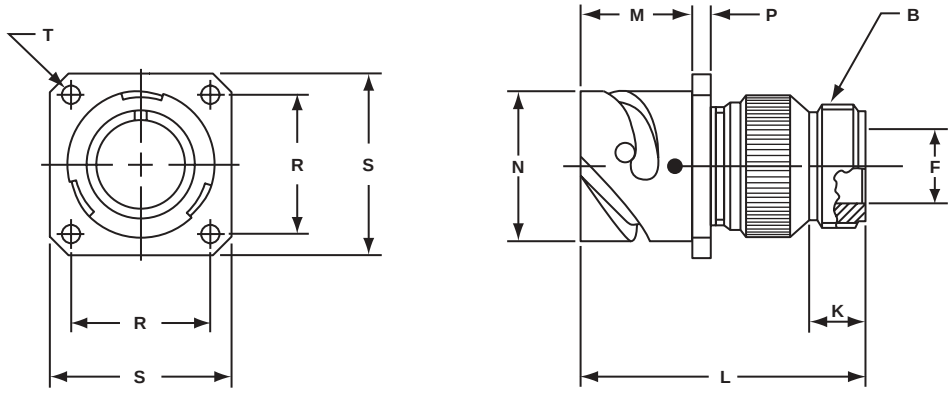

Inches

Shell Size	B Thread Class 2A	F Min.	K Min.	L Max.	M + .016 – .000	N + .000 – .006	P ± .008	R ± .004	S ± .012	T + .004 – .000
10SL	.6250-24 UNEF	.409	.374	1.969	.717	.717	.110	.717	1.000	.126
14S	.7500-20 UNEF	.520	.374	1.969	.717	.969	.126	.906	1.181	.126
16S	.8750-20 UNEF	.638	.374	1.969	.717	1.079	.126	.969	1.280	.126
16	.8750-20 UNEF	.638	.374	2.362	.846	1.079	.126	.969	1.280	.126
18	1.0000-20 UNEF	.756	.374	2.362	.907	1.213	.157	1.063	1.378	.126
20	1.1875-18 UNEF	.867	.374	2.362	.907	1.346	.157	1.157	1.496	.126
22	1.1875-18 UNEF	.965	.374	2.362	.907	1.472	.157	1.252	1.614	.126
24	1.4375-18 UNEF	1.094	.374	2.560	.907	1.610	.157	1.374	1.752	.146
28	1.4375-18 UNEF	1.228	.374	2.560	.947	1.839	.157	1.563	2.000	.146
32	1.7500-18 UNS	1.488	.433	2.560	.947	2.102	.157	1.752	2.244	.169
36	2.0000-18 UNS	1.780	.465	3.150	.947	2.346	.157	1.937	2.500	.169
40	2.2500-16 UN	2.016	.465	3.150	.947	2.579	.157	2.185	2.752	.169

Millimeters

Shell Size	F Min.	K Min.	L Max.	M + 0.4 – 0.0	N + 0.00 – 0.15	P ± 0.2	R ± 0.1	S ± 0.3	T + 0.1 – 0.0
10SL	10.4	9.5	50	18.20	18.2	2.8	18.2	25.4	3.2
14S	13.2	9.5	50	18.20	24.6	3.2	23.0	30.0	3.2
16S	16.2	9.5	50	18.20	27.4	3.2	24.6	32.5	3.2
16	16.2	9.5	60	21.50	27.4	3.2	24.6	32.5	3.2
18	19.2	9.5	60	23.05	30.8	4.0	27.0	35.0	3.2
20	22.0	9.5	60	23.05	34.2	4.0	29.4	38.0	3.2
22	24.5	9.5	60	23.05	37.4	4.0	31.8	41.0	3.2
24	27.8	9.5	65	23.05	40.9	4.0	34.9	44.5	3.7
28	31.2	9.5	65	24.05	46.7	4.0	39.7	50.8	3.7
32	37.8	11.0	65	24.05	53.4	4.0	44.5	57.0	4.3
36	45.2	11.8	80	24.05	59.6	4.0	49.2	63.5	4.3
40	51.2	11.8	80	24.05	65.5	4.0	55.5	69.9	4.3

All dimensions for reference only.

GT030AF/030F

square flange receptacle for rear panel mounting

GT030AF
- **Includes a cable clamp**
- **Wire sealing grommet not included**
- **Non-environment proof**
- **Four through mounting holes or optional threaded holes**

GT030F
- **Includes a wire sealing grommet and cable clamp**
- **For use with individual wires**
- **Environment proof**
- **Four through mounting holes or optional threaded holes**

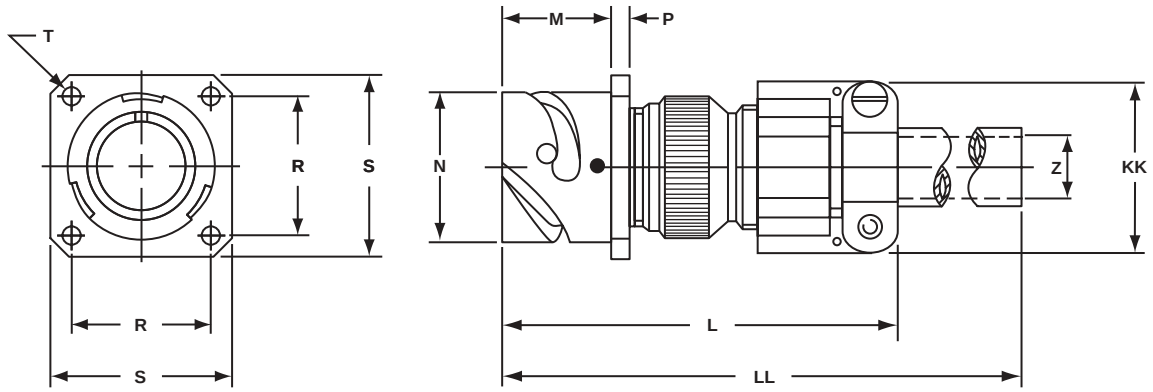

Inches

Shell Size	L Max.	M + .016 – .000	N + .000 – .006	P ± .008	R ± .004	S ± .012	T + .004 – .000	Z Nominal	KK Max.	LL Max.
10SL	2.362	.717	.717	.110	.717	1.000	.126	.220	.894	4.720
14S	2.440	.717	.969	.126	.906	1.181	.126	.312	1.083	4.720
16S	2.756	.717	1.079	.126	.969	1.280	.126	.437	1.181	4.720
16	2.756	.846	1.079	.126	.969	1.280	.126	.437	1.181	4.921
18	3.031	.907	1.213	.157	1.063	1.378	.126	.562	1.300	4.921
20	3.031	.907	1.346	.157	1.157	1.496	.126	.625	1.476	4.921
22	3.031	.907	1.472	.157	1.252	1.614	.126	.625	1.476	4.921
24	3.346	.907	1.610	.157	1.374	1.752	.146	.750	1.705	4.921
28	3.346	.947	1.839	.157	1.563	2.000	.146	.750	1.705	4.921
32	3.346	.947	2.102	.157	1.752	2.244	.169	.937	2.035	4.921
36	4.134	.947	2.346	.157	1.937	2.500	.169	1.250	2.283	5.315
40	5.118	.947	2.579	.157	2.185	2.752	.169	1.375	2.579	5.709

Millimeters

Shell Size	L Max.	M + 0.4 – 0.0	N + 0.00 – 0.15	P ± 0.2	R ± 0.1	S ± 0.3	T + 0.1 – 0.0	Z Nominal	KK Max.	LL Max.
10SL	60	18.20	18.2	2.8	18.2	25.4	3.2	5.58	22.7	120
14S	62	18.20	24.6	3.2	23.0	30.0	3.2	7.92	27.5	120
16S	70	18.20	27.4	3.2	24.6	32.5	3.2	11.09	30.0	120
16	70	21.50	27.4	3.2	24.6	32.5	3.2	11.09	30.0	125
18	77	23.05	30.8	4.0	27.0	35.0	3.2	14.27	33.0	125
20	77	23.05	34.2	4.0	29.4	38.0	3.2	15.87	37.5	125
22	77	23.05	37.4	4.0	31.8	41.0	3.2	15.87	37.5	125
24	85	23.05	40.9	4.0	34.9	44.5	3.7	19.05	43.3	125
28	85	24.05	46.7	4.0	39.7	50.8	3.7	19.05	43.3	125
32	85	24.05	53.4	4.0	44.5	57.0	4.3	23.79	51.7	125
36	105	24.05	59.6	4.0	49.2	63.5	4.3	31.75	58.0	135
40	130	24.05	65.5	4.0	55.5	69.9	4.3	34.92	65.5	145

All dimensions for reference only.

GT030G

square flange receptacle for rear panel mounting

- **Four through mounting holes or optional threaded holes**
- **With wire sealing grommet for individual wires**
- **Includes backshell for use with heat-shrink tubing**
- **Environment proof**

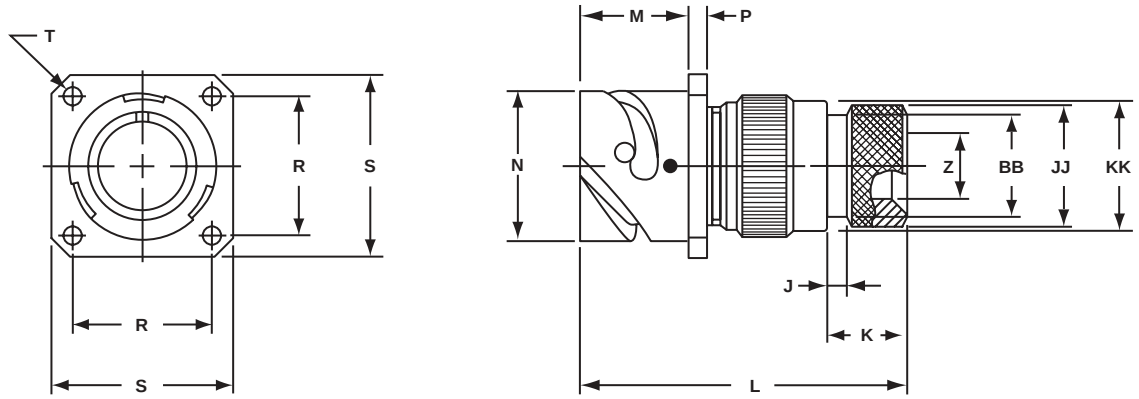

Inches

Shell Size	J ± .008	K ± .020	L Max.	M + .016 – .000	N + .000 – .006	P ± .008	R ± .004	S ± .012	T + .004 – .000	Z Min.	BB Max.	JJ ± .008	KK ± .008
10SL	.138	.461	1.969	.717	.717	.110	.717	1.000	.126	.303	.524	.610	.669
14S	.138	.461	1.969	.717	.969	.126	.906	1.181	.126	.417	.669	.752	.791
16S	.138	.461	1.969	.717	1.079	.126	.969	1.280	.126	.531	.862	.941	.925
16	.138	.453	2.362	.846	1.079	.126	.969	1.280	.126	.531	.862	.941	.925
18	.138	.453	2.362	.907	1.213	.157	1.063	1.378	.126	.575	.862	.941	1.043
20	.138	.500	2.559	.907	1.346	.157	1.157	1.496	.126	.736	1.031	1.165	1.189
22	.138	.500	2.559	.907	1.472	.157	1.252	1.614	.126	.819	1.031	1.165	1.323
24	.138	.500	2.559	.907	1.610	.157	1.374	1.752	.146	.969	1.358	1.488	1.421
28	.138	.500	2.559	.947	1.839	.157	1.563	2.000	.146	1.063	1.358	1.488	1.630
32	.138	.598	2.756	.947	2.102	.157	1.752	2.244	.169	1.311	1.717	1.882	1.913
36	.138	.598	3.150	.947	2.346	.157	1.937	2.500	.169	1.516	1.717	1.882	2.157
40	.138	.610	3.150	.947	2.579	1.57	2.185	2.752	.169	1.898	2.071	2.276	2.402

Millimeters

Shell Size	J ± 0.2	K ± 0.5	L Max.	M + 0.4 – 0.0	N + 0.00 – 0.15	P ± 0.2	R ± 0.1	S ± 0.3	T + 0.1 – 0.0	Z Min.	B Max.	JJ ± 0.2	KK ± 0.2
10SL	3.5	11.7	50	18.20	18.2	2.8	18.2	25.4	3.2	7.7	13.3	15.5	17.0
14S	3.5	11.7	50	18.20	24.6	3.2	23.0	30.0	3.2	10.6	17.0	19.1	20.1
16S	3.5	11.7	50	18.20	27.4	3.2	24.6	32.5	3.2	13.5	21.9	23.9	23.5
16	3.5	11.5	60	21.50	27.4	3.2	24.6	32.5	3.2	13.5	21.9	23.9	23.5
18	3.5	11.5	60	23.05	30.8	4.0	27.0	35.0	3.2	14.6	21.9	23.9	26.5
20	3.5	12.7	65	23.05	34.2	4.0	29.4	38.0	3.2	18.7	26.2	29.6	30.2
22	3.5	12.7	65	23.05	37.4	4.0	31.8	41.0	3.2	20.8	26.2	29.6	33.6
24	3.5	12.7	65	23.05	40.9	4.0	34.9	44.5	3.7	24.6	34.5	37.8	36.1
28	3.5	12.7	65	24.05	46.7	4.0	39.7	50.8	3.7	27.0	34.5	37.8	41.4
32	3.5	15.2	70	24.05	53.4	4.0	44.5	57.0	4.3	33.3	43.6	47.8	48.6
36	3.5	15.2	80	24.05	59.6	4.0	49.2	63.5	4.3	38.5	43.6	47.8	54.8
40	3.5	15.5	80	24.05	65.5	4.0	55.5	69.9	4.3	48.2	52.6	57.8	61.0

All dimensions for reference only.

GT030LCF/030LCFZ

square flange receptacle for rear panel mounting

GT030LCF
- **Four through mounting holes or optional threaded holes**
- **With cable clamp and seal**
- **Long backshell provides more working room for jacketed cable**
- **Environment proof**

GT030LCFZ
- **Same as GT030LCF except: Individual wire sealing grommet for added moisture protection**
- **Environment proof**

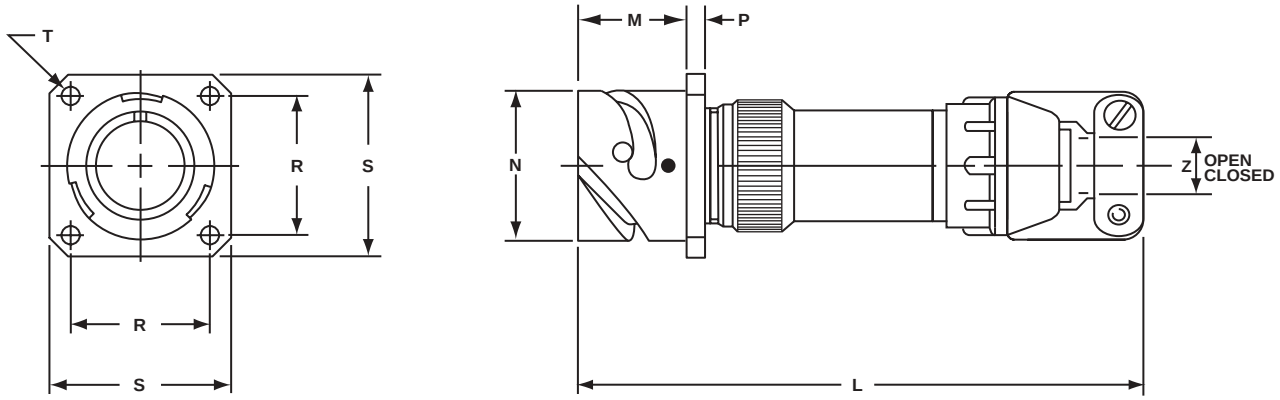

Inches

Shell Size	L Approx.	M +.016 –.000	N +.000 –.006	P ±.008	R ±.004	S ±.012	T +.004 –.000	Z Open	Z Closed
10SL	3.811	.717	.717	.110	.717	1.000	.126	.312	.094
14S	3.843	.717	.969	.126	.906	1.181	.126	.438	.230
16S	3.843	.717	1.079	.126	.969	1.280	.126	.531	.315
16	4.217	.846	1.079	.126	.969	1.280	.126	.531	.315
18	4.409	.907	1.213	.157	1.063	1.378	.126	.625	.378
20	4.409	.907	1.346	.157	1.157	1.496	.126	.748	.445
22	4.413	.907	1.472	.157	1.252	1.614	.126	.748	.445
24	4.535	.907	1.610	.157	1.374	1.752	.146	.937	.610
28	4.744	.947	1.839	.157	1.563	2.000	.146	.937	.610
32	5.079	.947	2.102	.157	1.752	2.244	.169	1.250	.921
36	5.327	.947	2.346	.157	1.937	2.500	.169	1.378	.921
40	5.327	.947	2.579	1.57	2.185	2.752	.169	1.624	1.177

Millimeters

Shell Size	L Approx.	M + 0.4 – 0.0	N + 0.00 – 0.15	P ± 0.2	R ± 0.1	S ± 0.3	T + 0.1 – 0.0	Z Open	Z Closed
10SL	96.8	18.20	18.2	2.8	18.2	25.4	3.2	7.93	2.38
14S	97.6	18.20	24.6	3.2	23.0	30.0	3.2	11.12	5.84
16S	97.6	18.20	27.4	3.2	24.6	32.5	3.2	13.48	8.00
16	107.1	21.50	27.4	3.2	24.6	32.5	3.2	13.48	8.00
18	112.0	23.05	30.8	4.0	27.0	35.0	3.2	15.87	9.60
20	112.0	23.05	34.2	4.0	29.4	38.0	3.2	19.00	11.30
22	112.1	23.05	37.4	4.0	31.8	41.0	3.2	19.00	11.30
24	115.2	23.05	40.9	4.0	34.9	44.5	3.7	23.80	15.50
28	120.5	24.05	46.7	4.0	39.7	50.8	3.7	23.80	15.50
32	129.0	24.05	53.4	4.0	44.5	57.0	4.3	31.75	23.40
36	135.3	24.05	59.6	4.0	49.2	63.5	4.3	35.00	23.40
40	135.3	24.05	65.5	4.0	55.5	69.9	4.3	41.25	29.90

All dimensions for reference only.

GT030R

square flange receptacle for rear panel mounting

- **Four through mounting holes or optional threaded holes**
- **With a wire sealing grommet for individual wires**
- **Includes backshell for conduit termination**
- **Environment proof**

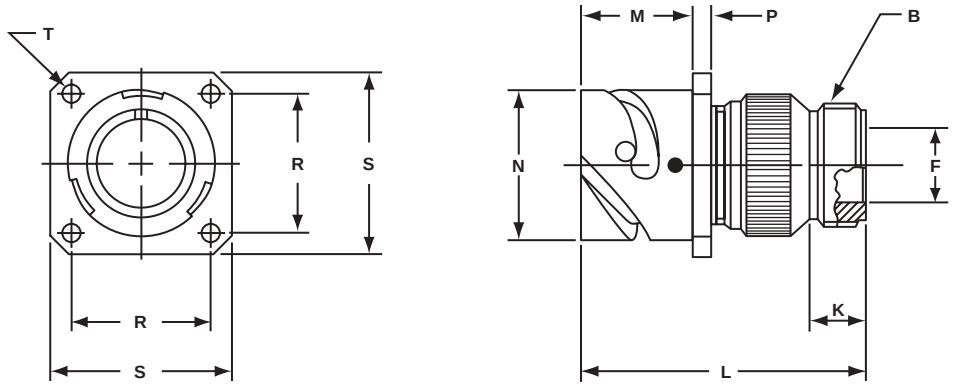

Inches

Shell Size	B Thread Class 2A	F Min.	K Min.	L Max.	M + .016 – .000	N + .000 – .006	P ± .008	R ± .004	S ± .012	T + .004 – .000
10SL	.6250-24 UNEF	.409	.374	1.969	.717	.717	.110	.717	1.000	.126
14S	.7500-20 UNEF	.520	.374	1.969	.717	.969	.126	.906	1.181	.126
16S	.8750-20 UNEF	.638	.374	1.969	.717	1.079	.126	.969	1.280	.126
16	.8750-20 UNEF	.638	.374	2.362	.846	1.079	.126	.969	1.280	.126
18	1.0000-20 UNEF	.756	.374	2.362	.907	1.213	.157	1.063	1.378	.126
20	1.1875-18 UNEF	.867	.374	2.362	.907	1.346	.157	1.157	1.496	.126
22	1.1875-18 UNEF	.965	.374	2.362	.907	1.472	.157	1.252	1.614	.126
24	1.4375-18 UNEF	1.094	.374	2.560	.907	1.610	.157	1.374	1.752	.146
28	1.4375-18 UNEF	1.228	.374	2.560	.947	1.839	.157	1.563	2.000	.146
32	1.7500-18 UNS	1.488	.433	2.560	.947	2.102	.157	1.752	2.244	.169
36	2.0000-18 UNS	1.780	.465	3.150	.947	2.346	.157	1.937	2.500	.169
40	2.2500-16 UN	2.016	.465	3.150	.947	2.579	.157	2.185	2.752	.169

Millimeters

Shell Size	F Min.	K Min.	L Max.	M + 0.4 – 0.0	N + 0.00 – 0.15	P ± 0.2	R ± 0.1	S ± 0.3	T + 0.1 – 0.0
10SL	10.4	9.5	50	18.20	18.2	2.8	18.2	25.4	3.2
14S	13.2	9.5	50	18.20	24.6	3.2	23.0	30.0	3.2
16S	16.2	9.5	50	18.20	27.4	3.2	24.6	32.5	3.2
16	16.2	9.5	60	21.50	27.4	3.2	24.6	32.5	3.2
18	19.2	9.5	60	23.05	30.8	4.0	27.0	35.0	3.2
20	22.0	9.5	60	23.05	34.2	4.0	29.4	38.0	3.2
22	24.5	9.5	60	23.05	37.4	4.0	31.8	41.0	3.2
24	27.8	9.5	65	23.05	40.9	4.0	34.9	44.5	3.7
28	31.2	9.5	65	24.05	46.7	4.0	39.7	50.8	3.7
32	37.8	11.0	65	24.05	53.4	4.0	44.5	57.0	4.3
36	45.2	11.8	80	24.05	59.6	4.0	49.2	63.5	4.3
40	51.2	11.8	80	24.05	65.5	4.0	55.5	69.9	4.3

All dimensions for reference only.

GT030RV

square flange receptacle for rear panel mounting

- **Four through mounting holes or optional threaded holes**
- **With wire sealing grommet for individual wires**
- **Environment proof**

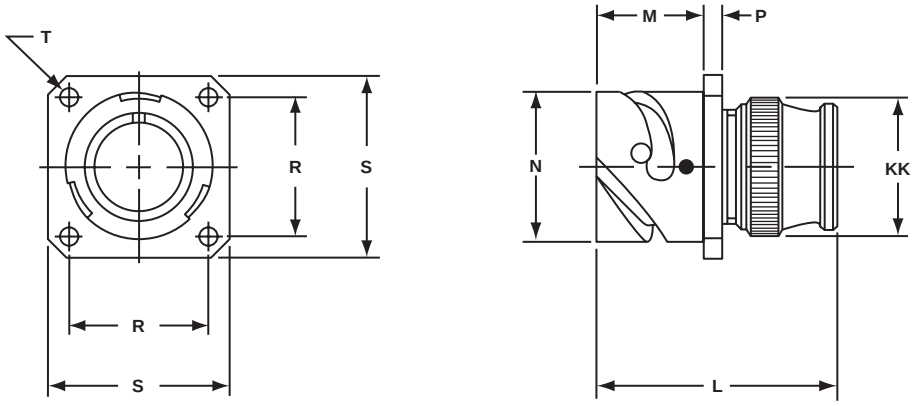

Inches

Shell Size	L Max.	M + .016 – .000	N + .000 – .006	P ± .008	R ± .004	S ± .012	T + .004 – .000	KK Max.
10SL	1.890	.717	.717	.110	.717	1.000	.126	.787
14S	1.890	.717	.969	.126	.906	1.181	.126	.945
16S	1.890	.717	1.079	.126	.969	1.280	.126	1.024
16	2.205	.846	1.079	.126	.969	1.280	.126	1.024
18	2.244	.907	1.213	.157	1.063	1.378	.126	1.161
20	2.244	.907	1.346	.157	1.157	1.496	.126	1.299
22	2.244	.907	1.472	.157	1.252	1.614	.126	1.417
24	2.244	.907	1.610	.157	1.374	1.752	.146	1.575
28	2.244	.947	1.839	.157	1.563	2.000	.146	1.811
32	2.362	.947	2.102	.157	1.752	2.244	.169	2.028
36	2.362	.947	2.346	.157	1.937	2.500	.169	2.283
40	2.362	.947	2.579	.157	2.185	2.752	.169	2.539

Millimeters

Shell Size	L Max.	M + 0.4 – 0.0	N + 0.00 – 0.15	P ± 0.2	R ± 0.1	S ± 0.3	T + 0.1 – 0.0	KK Max.
10SL	48.0	18.20	18.2	2.8	18.2	25.4	3.2	20.0
14S	48.0	18.20	24.6	3.2	23.0	30.0	3.2	24.0
16S	48.0	18.20	27.4	3.2	24.6	32.5	3.2	26.0
16	56.0	21.50	27.4	3.2	24.6	32.5	3.2	26.0
18	57.0	23.05	30.8	4.0	27.0	35.0	3.2	29.5
20	57.0	23.05	34.2	4.0	29.4	38.0	3.2	33.0
22	57.0	23.05	37.4	4.0	31.8	41.0	3.2	36.0
24	57.0	23.05	40.9	4.0	34.9	44.5	3.7	40.0
28	57.0	24.05	46.7	4.0	39.7	50.8	3.7	46.0
32	60.0	24.05	53.4	4.0	44.5	57.0	4.3	51.5
36	60.0	24.05	59.6	4.0	49.2	63.5	4.3	58.0
40	60.0	24.05	65.5	4.0	55.5	69.9	4.3	64.5

All dimensions for reference only.

GT06A
straight plug

- **Without grommet and cable clamp**
- **If a cable clamp is required, see pages 82 and 84**
- **Non-environment proof**

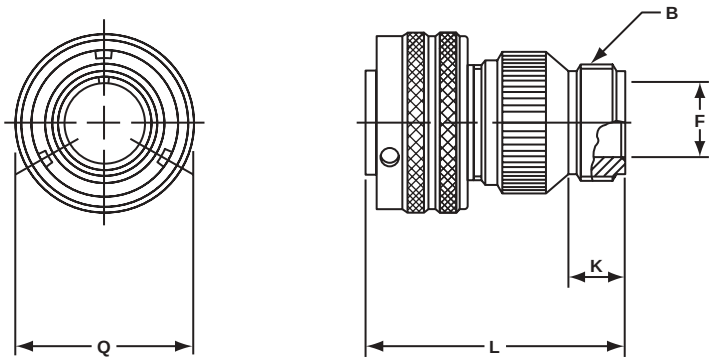

Inches

Shell Size	B Thread Class 2A	F Min.	K Min.	L Max.	Q Max.
10SL	.6250-24UNEF	.409	.374	1.969	.898
14S	.7500-20UNEF	.520	.374	1.969	1.150
16S	.8750-20UNEF	.638	.374	1.969	1.260
16	.8750-20UNEF	.638	.374	2.362	1.260
18	1.0000-20UNEF	.756	.374	2.362	1.437
20	1.1875-18UNEF	.867	.374	2.362	1.571
22	1.1875-18UNEF	.965	.374	2.362	1.697
24	1.4375-18UNEF	1.094	.374	2.560	1.835
28	1.4375-18UNEF	1.228	.374	2.560	2.102
32	1.7500-18UNS	1.488	.433	2.560	2.366
36	2.0000-18UNS	1.780	.465	3.150	2.610
40	2.2500-16UN	2.016	.465	3.150	2.850

Millimeters

Shell Size	F Min.	K Min.	L Max.	Q Max.
10SL	10.4	9.5	50	22.8
14S	13.2	9.5	50	29.2
16S	16.2	9.5	50	32.0
16	16.2	9.5	60	32.0
18	19.2	9.5	60	36.5
20	22.0	9.5	60	39.9
22	24.5	9.5	60	43.1
24	27.8	9.5	65	46.6
28	31.2	9.5	65	53.4
32	37.8	11.0	65	60.1
36	45.2	11.8	80	66.3
40	51.2	11.8	80	72.4

All dimensions for reference only.

GT06AF/06F
straight plug

GT06AF
- **With a cable clamp**
- **Wire sealing grommet not supplied**
- **Non-environment proof**

GT06F
- **With a wire sealing grommet and cable clamp**
- **For use with individual wires**
- **Environment proof**

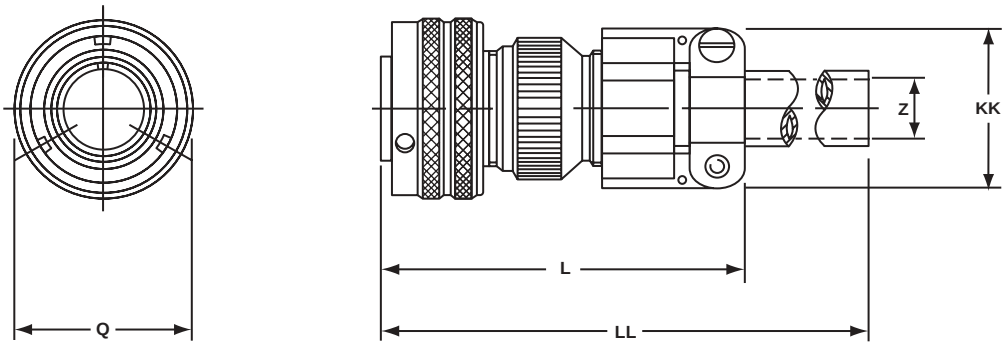

Inches

Shell Size	L Max.	Q Max.	Z Nominal	KK Max.	LL Max.
10SL	2.165	.898	.220	.894	4.724
14S	2.362	1.150	.312	1.083	4.724
16S	2.756	1.260	.437	1.181	4.724
16	2.756	1.260	.437	1.181	4.921
18	2.953	1.437	.562	1.299	4.921
20	2.953	1.571	.625	1.476	4.921
22	2.953	1.697	.625	1.476	4.921
24	3.543	1.835	.750	1.705	4.921
28	3.543	2.102	.750	1.705	4.921
32	3.543	2.366	.937	2.035	4.921
36	3.937	2.610	1.250	2.283	5.315
40	4.921	2.850	1.375	2.579	5.709

Millimeters

Shell Size	L Max.	Q Max.	Z Nominal	KK Max.	LL Max.
10SL	55	22.8	5.58	22.7	120
14S	60	29.2	7.92	27.5	120
16S	70	32.0	11.09	30.0	120
16	70	32.0	11.09	30.0	125
18	75	36.5	14.27	33.0	125
20	75	39.9	15.87	37.5	125
22	75	43.1	15.87	37.5	125
24	90	46.6	19.05	43.3	125
28	90	53.4	19.05	43.3	125
32	90	60.1	23.79	51.7	125
36	100	66.3	31.75	58.0	135
40	125	72.4	34.92	65.5	145

All dimensions for reference only.

GT06CF
straight plug

- **With a cable clamp and seal**
- **For use with jacketed cable**
- **Environment proof**

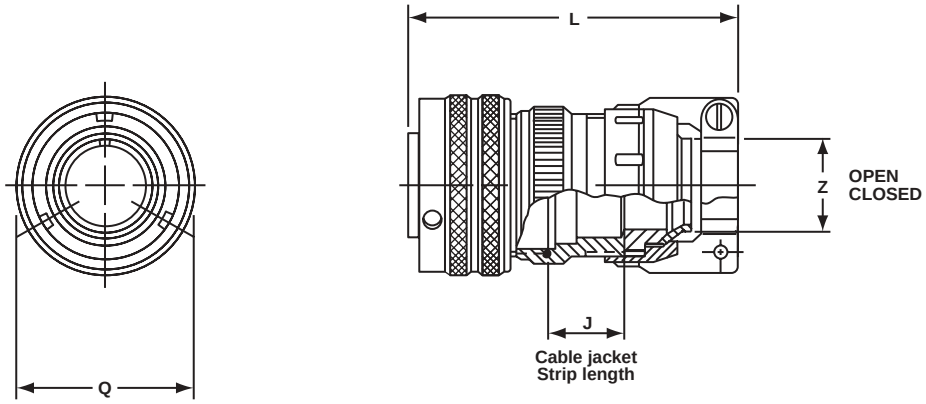

Inches

Shell Size	J Approx.	L Approx.	Q Max.	Z	
				Open	Closed
10SL	.551	2.752	.898	.312	.094
14S	.732	2.898	1.150	.438	.230
16S	.732	2.898	1.260	.531	.315
16	.653	3.216	1.260	.531	.315
18	.705	3.307	1.437	.625	.378
20	.705	3.311	1.571	.748	.445
22	.744	3.350	1.697	.748	.445
24	.689	3.484	1.835	.937	.610
28	.921	3.736	2.102	.937	.610
32	1.016	4.142	2.366	1.250	.921
36	1.031	4.390	2.610	1.378	.921
40	1.614	4.640	2.854	1.624	1.177

Millimeters

Shell Size	J Approx.	L Approx.	Q Max.	Z	
				Open	Closed
10SL	14.0	69.6	22.8	7.93	2.38
14S	18.6	73.6	29.2	11.12	5.84
16S	18.6	73.6	32.0	13.48	8.00
16	16.6	81.7	32.0	13.48	8.00
18	17.9	84.0	36.5	15.87	9.60
20	17.9	84.1	39.9	19.00	11.30
22	18.9	85.1	43.1	19.00	11.30
24	17.5	88.5	46.6	23.80	15.50
28	23.4	94.9	53.4	23.80	15.50
32	25.8	105.2	60.1	31.75	23.40
36	26.2	111.5	66.3	35.00	23.40
40	41.0	111.5	72.5	41.25	29.90

All dimensions for reference only.

GT06CFGG
straight plug

- **With rubber covered coupling nut for extreme shock applications**
- **The shrouded coupling nut protects the plug from damage**
- **Provides a superior gripping surface**
- **Seals the bayonet ramps**
- **Includes a backshell**
- **Mates with GT020RFSM (see page 44)**
- **Environment proof**

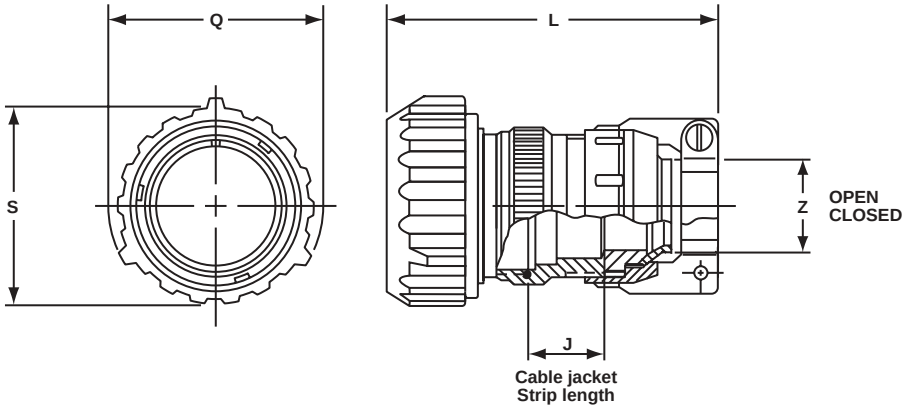

Inches

Shell Size	J Approx.	L Approx.	Q Max.	S Dia.	Z	
					Open	Closed
10SL	.551	3.150	1.319	1.122	.312	.094
18	.701	3.346	1.929	1.713	.625	.378
20	.705	3.937	2.028	1.811	.748	.445
22	.705	3.937	2.224	1.988	.748	.445
24	.689	4.016	2.362	2.126	.937	.610
28	.921	4.291	2.638	2.402	.937	.610
32	1.016	5.315	2.992	2.661	1.250	.921
36	1.031	5.039	3.240	2.925	1.378	.921
40	1.614	5.315	3.465	3.150	1.624	1.177

Millimeters

Shell Size	J Approx.	L Approx.	Q Max.	S Dia.	Z	
					Open	Closed
10SL	14.0	80	33.5	28.5	7.93	2.38
18	17.8	85	49.0	43.5	15.87	9.60
20	17.9	100	51.5	46.0	19.00	11.30
22	17.9	100	56.5	50.5	19.00	11.30
24	17.5	102	60.0	54.0	23.80	15.50
28	23.4	109	67.0	61.0	23.80	15.50
32	25.6	135	76.0	67.6	31.75	23.40
36	26.2	128	82.3	74.3	35.00	23.40
40	41.0	135	88.0	80.0	41.25	29.90

All dimensions for reference only.

GT06G
straight plug

- **With a wire sealing grommet**
- **For use with individual wires**
- **Includes a backshell for use with heat-shrink tubing**
- **Environment proof**

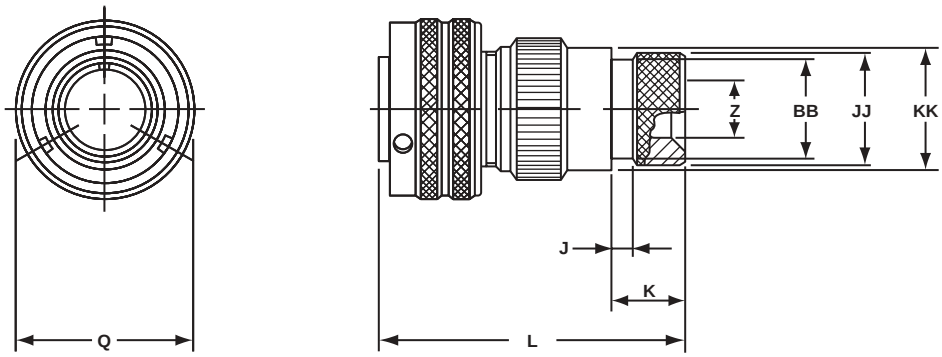

Inches

Shell Size	J ± .008	K ± .020	L Max.	Q Max.	Z Min.	BB Max.	JJ ± .008	KK ± .008
10SL	.138	.461	1.969	.898	.303	.524	.610	.669
14S	.138	.461	1.969	1.150	.417	.669	.752	.791
16S	.138	.461	1.969	1.260	.531	.862	.941	.925
16	.138	.453	2.362	1.260	.531	.862	.941	.925
18	.138	.453	2.362	1.437	.575	.862	.941	1.043
20	.138	.500	2.559	1.571	.736	1.031	1.165	1.189
22	.138	.500	2.559	1.697	.819	1.031	1.165	1.323
24	.138	.500	2.559	1.835	.969	1.358	1.488	1.421
28	.138	.500	2.559	2.102	1.063	1.358	1.488	1.630
32	.138	.598	2.756	2.366	1.311	1.717	1.882	1.913
36	.138	.598	3.150	2.610	1.516	1.717	1.882	2.157
40	.138	.610	3.150	2.854	1.898	2.071	2.276	2.402

Millimeters

Shell Size	J ± 0.2	K ± 0.5	L Max.	Q Max.	Z Min.	BB Max.	JJ ± 0.2	KK ± 0.2
10SL	3.5	11.7	50	22.8	7.7	13.3	15.5	17.0
14S	3.5	11.7	50	29.2	10.6	17.0	19.1	20.1
16S	3.5	11.7	50	32.0	13.5	21.9	23.9	23.5
16	3.5	11.5	60	32.0	13.5	21.9	23.9	23.5
18	3.5	11.5	60	36.5	14.6	21.9	23.9	26.5
20	3.5	12.7	65	39.9	18.7	26.2	29.6	30.2
22	3.5	12.7	65	43.1	20.8	26.2	29.6	33.6
24	3.5	12.7	65	46.6	24.6	34.5	37.8	36.1
28	3.5	12.7	65	53.4	27.0	34.5	37.8	41.4
32	3.5	15.2	70	60.1	33.3	43.6	47.8	48.6
36	3.5	15.2	80	66.3	38.5	43.6	47.8	54.8
40	3.5	15.2	80	72.5	48.2	52.6	57.8	61.0

All dimensions for reference only.

GT06G2
straight plug

- **For use with individual wires and termination of heat shrink tubing**
- **With individual wire sealing grommet**
- **Backshell includes free spinning adapter**
- **Environment proof**

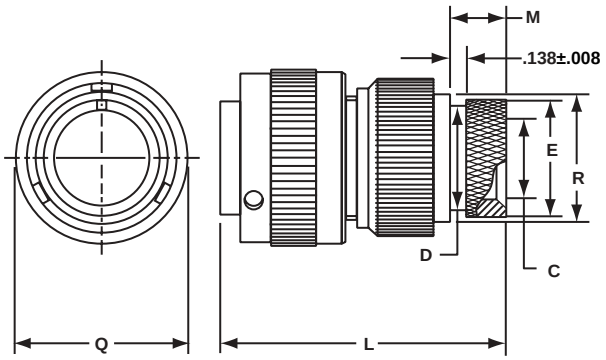

Inches

Shell Size	C Min.	D Max.	E ±.008	L Max.	M ±.020	Q Max.	R ±.007
10SL	.303	.524	.610	1.969	.461	.898	.669
14S	.417	.669	.752	1.969	.461	1.150	.791
16S	.531	.862	.941	1.969	.461	1.299	.925
16	.531	.862	.941	2.362	.453	1.299	.925
18	.637	.862	.941	2.362	.453	1.437	1.043
20	.736	1.031	1.165	2.559	.500	1.571	1.189
22	.877	1.031	1.165	2.559	.500	1.697	1.323
24	.969	1.358	1.488	2.559	.500	1.835	1.421
28	1.094	1.358	1.488	2.559	.500	2.102	1.630
32	1.392	1.717	1.882	2.756	.598	2.366	1.913
36	1.539	1.717	1.882	3.150	.598	2.610	2.157
40	1.898	2.071	2.276	3.150	.610	2.850	2.402

Millimeters

Shell Size	C Min.	D Max.	E ±.008	L Max.	M ±.020	Q Max.	R ±.007
10SL	7.7	13.3	15.5	50.0	11.7	22.8	17.0
14S	10.6	17.0	19.1	50.0	11.7	29.2	20.1
16S	13.5	21.9	23.9	50.0	11.7	32.0	23.5
16	13.5	21.9	23.9	60.0	11.5	32.0	23.5
18	16.2	21.9	23.9	60.0	11.5	36.5	26.5
20	18.7	26.2	29.6	65.0	12.7	39.9	30.2
22	22.3	26.2	29.6	65.0	12.7	43.1	33.6
24	24.6	34.5	37.8	65.0	12.7	46.6	36.0
28	27.8	34.5	37.8	65.0	12.7	53.4	41.4
32	35.4	43.6	47.8	70.0	15.2	60.1	48.6
36	39.1	43.6	47.8	80.0	15.2	66.3	54.8
40	48.2	52.6	57.8	80.0	15.5	72.5	61.0

All dimensions for reference only.

GT06LC
straight plug

- **Includes a backshell with a basket weave strain relief cord grip**
- **Environment proof**

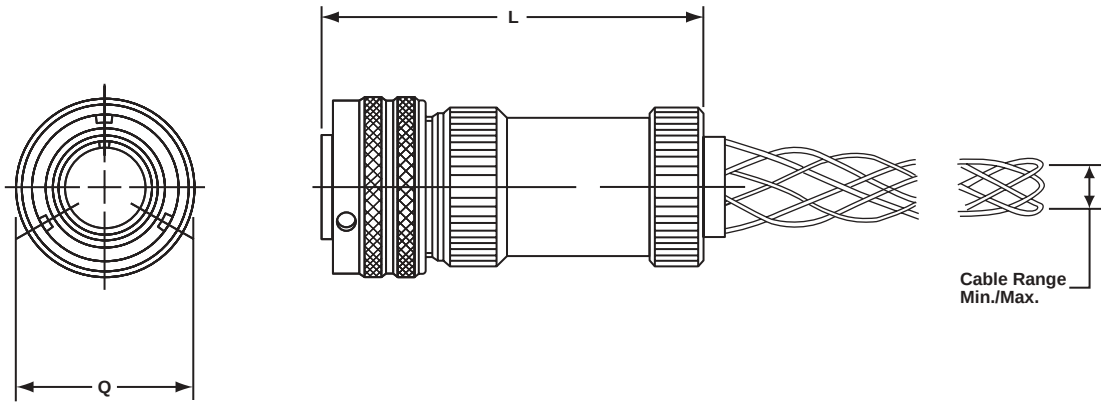

Inches

Shell Size	L Ref.	Q Max.
10SL	3.000	.898
14S	3.000	1.150
16S	3.000	1.260
16	3.250	1.260
18	3.250	1.437
20	3.250	1.571
22	3.250	1.697
24	3.250	1.835
28	3.600	2.102
32	3.600	2.366
36	3.600	2.610
40	3.600	2.854

Cable Range		
AXX Part No. Suffix*	Min.	Max.
A16	.250	.375
A54	.375	.500
A10	.500	.625
A12	.625	.750
A42	.750	.875
A11	.875	1.000
A55	1.000	1.125
A14	1.125	1.250
A56	1.250	1.375
A74	1.375	1.500
A57	1.500	1.625
A58	1.625	1.750

Millimeters

Shell Size	L Ref.	Q Max.
10SL	76.2	22.8
14S	76.2	29.2
16S	76.2	32.0
16	82.5	32.0
18	82.5	36.4
20	82.5	39.9
22	82.5	43.1
24	82.5	46.6
28	91.4	53.3
32	91.4	60.0
36	91.4	66.2
40	91.4	72.4

Cable Range		
AXX Part No. Suffix*	Min.	Max.
A16	6.3	9.5
A54	9.5	12.7
A10	12.7	15.8
A12	15.8	19.0
A42	19.0	22.2
A11	22.2	25.4
A55	25.4	28.5
A14	28.5	31.7
A56	31.7	34.9
A74	34.9	38.1
A57	38.1	41.2
A58	41.2	44.4

All dimensions for reference only.

* For example, typical part number would be: GTC06LC28-8PA59

GT06LCF/06LCFZ
straight plug

GT06LCF
- **With cable clamp and seal**
- **Long backshell provides more working room for jacketed cable**
- **Environment proof**

GT06LCFZ
- **Same as GT06LCF except: Individual wire sealing grommet for added moisture protection**
- **Environment proof**

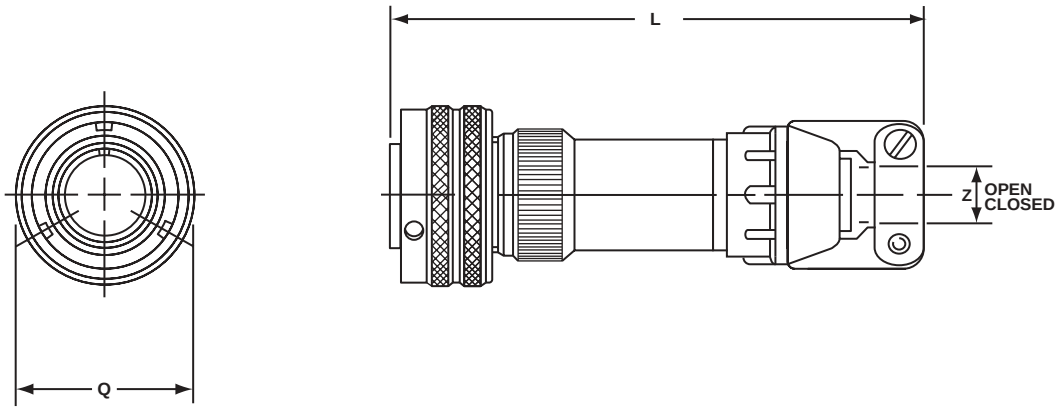

Inches

Shell Size	L Approx.	Q Max.	Z	
			Open	Closed
10SL	3.811	.898	.312	.094
14S	3.843	1.150	.438	.230
16S	3.843	1.260	.531	.315
16	4.217	1.260	.531	.315
18	4.409	1.437	.625	.378
20	4.409	1.571	.748	.445
22	4.413	1.697	.748	.445
24	4.535	1.835	.937	.610
28	4.756	2.102	.937	.610
32	5.079	2.366	1.250	.921
36	5.327	2.610	1.378	.921
40	5.327	2.854	1.624	1.177

Millimeters

Shell Size	L Approx.	Q Max.	Z	
			Open	Closed
10SL	96.8	22.8	7.93	2.38
14S	97.6	29.2	11.12	5.84
16S	97.6	32.0	13.48	8.00
16	107.1	32.0	13.48	8.00
18	112.0	36.5	15.87	9.60
20	112.0	39.9	19.00	11.30
22	112.1	43.1	19.00	11.30
24	115.2	46.6	23.80	15.50
28	120.8	53.4	23.80	15.50
32	129.0	60.1	31.75	23.40
36	135.3	66.3	35.00	23.40
40	135.3	72.5	41.25	29.90

All dimensions for reference only.

GT06LT
straight plug

- **For termination of metallic core conduit**
- **With individual wire sealing grommet**
- **Environment proof**

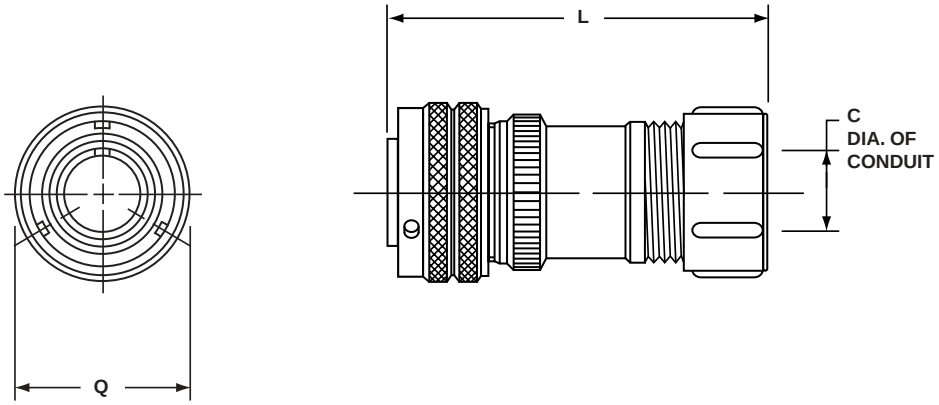

Inches

Shell Size	L Max.	Q Max.
10SL	Dependent on Conduit and Shell Combination Consult Amphenol, Sidney, NY for further information	.898
14S		1.150
16S		1.299
16		1.299
18		1.437
20		1.571
22		1.697
24		1.835
28		2.102
32		2.366
36		2.610
40		2.850

Inches

C Conduit Size
3/8
1/2
3/4
1
1-1/4
1-1/2
2

Millimeters

Shell Size	L Max.	Q Max.
10SL	Dependent on Conduit and Shell Combination Consult Amphenol, Sidney, NY for further information	22.81
14S		29.21
16S		32.99
16		32.99
18		36.50
20		39.90
22		43.10
24		46.61
28		53.39
32		60.10
36		66.29
40		72.39

All dimensions for reference only.

GT06PFC
straight plug

- **For termination of plastic flexible corrugated conduit**
- **With individual wire sealing grommet**
- **Environment proof**

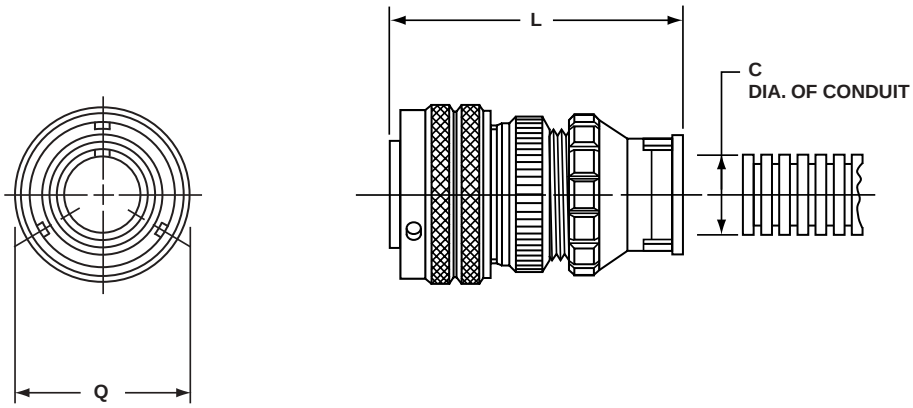

Inches

Shell Size	C Conduit Size	L Max.	Q Max.
10SL	Wide Variety of Sizes Consult Amphenol, Sidney, NY for further information	Dependent on Conduit and Shell Combination Consult Amphenol, Sidney, NY for further information	.898
14S			1.150
16S			1.299
16			1.299
18			1.437
20			1.571
22			1.697
24			1.835
28			2.102
32			2.366
36			2.610
40			2.850

Millimeters

Shell Size	C Conduit Size	L Max.	Q Max.
10SL	Wide Variety of Sizes Consult Amphenol, Sidney, NY for further information	Dependent on Conduit and Shell Combination Consult Amphenol, Sidney, NY for further information	22.81
14S			29.21
16S			32.99
16			32.99
18			36.50
20			39.90
22			43.10
24			46.61
28			53.39
32			60.10
36			66.29
40			72.39

All dimensions for reference only.

GT06PG
straight plug

- **Long adapter with internal PG thread**
- **With wire sealing grommet**
- **Environment proof**

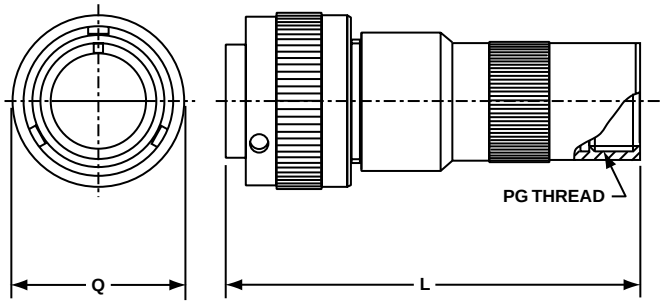

Inches

Shell Size	PG* Thread	L Ref.	Q Max.
10SL	7	2.873	.898
14S	9	2.904	1.150
16S	11	2.904	1.299
16	11	3.291	1.299
18	13.5	3.406	1.437
20	16	3.391	1.571
22	21	3.395	1.697
24	21	3.470	1.835
28	29	3.604	2.102
32	36	3.751	2.366
36	42	3.795	2.610
40	48	3.795	2.850

Millimeters

Shell Size	PG* Thread	L Ref.	Q Max.
10SL	7	73.0	22.8
14S	9	73.8	29.2
16S	11	73.8	32.0
16	11	83.6	32.0
18	13.5	86.5	36.5
20	16	86.1	39.9
22	21	86.2	43.1
24	21	88.1	46.6
28	29	91.5	53.4
32	36	95.3	60.1
36	42	96.4	66.3
40	48	96.4	72.5

All dimensions for reference only.
Additional shell size/PG thread combinations available

GT06PP/064PP
panel plug

GT06PP
- **Square flange mounting with four through holes**
- **Environment proof with proper panel sealing gasket (see page 79)**

GT064PP
- **Square flange mounting with four through holes**
- **Environment proof with proper panel sealing gasket (see page 79)**
- **Includes a heavy duty coupling nut**

GT06PP

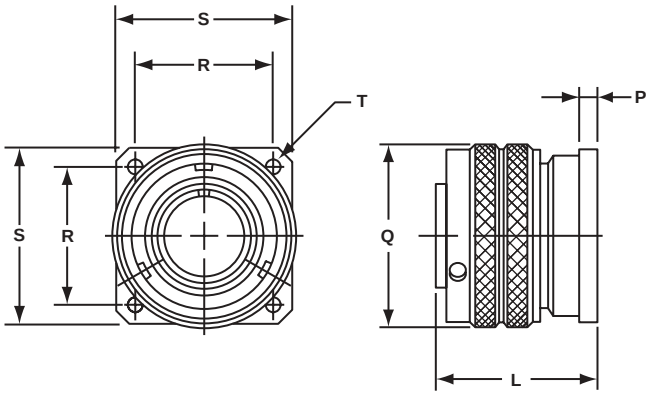

GT064PP

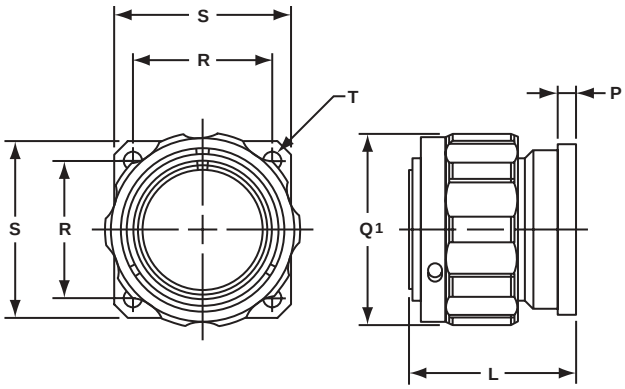

Inches

Shell Size	L Approx.	Q Max.	Q[1] Max.	P ± .008	R ± .004	S ± .012	T + .004 – .000
10SL	1.087	.898	.953	.110	.717	1.000	.126
14S	1.091	1.150	1.208	.126	.906	1.181	.126
16S	1.091	1.260	1.319	.126	.969	1.280	.126
16	1.469	1.260	1.319	.126	.969	1.280	.126
18	1.500	1.437	1.510	.157	1.063	1.378	.126
20	1.500	1.571	1.660	.157	1.157	1.496	.126
22	1.500	1.697	1.770	.157	1.252	1.614	.126
24	1.598	1.835	1.910	.157	1.374	1.752	.146
28	1.626	2.102	2.085	.157	1.563	2.000	.146
32	1.764	2.366	2.440	.157	1.752	2.244	.169
36	1.764	2.610	2.660	.157	1.937	2.500	.169
40	1.764	2.850	2.910	.157	2.185	2.752	.169

Shell Size	L Approx.	Q Max.	Q[1] Max.	P ± 0.2	R ± 0.1	S ± 0.3	T + 0.1 – 0.0
10SL	27.6	22.8	24.2	2.8	18.2	25.4	3.2
14S	27.7	29.2	30.6	3.2	23.0	30.0	3.2
16S	27.7	32.0	33.5	3.2	24.6	32.5	3.2
16	37.3	32.0	33.5	3.2	24.6	32.5	3.2
18	38.1	36.5	38.3	4.0	27.0	35.0	3.2
20	38.1	39.9	42.1	4.0	29.4	38.0	3.2
22	38.1	43.1	44.9	4.0	31.8	41.0	3.2
24	40.6	46.6	48.5	4.0	34.9	44.5	3.7
28	41.3	53.4	52.9	4.0	39.7	50.8	3.7
32	44.8	60.1	61.9	4.0	44.5	57.0	4.3
36	44.8	66.3	67.5	4.0	49.2	63.5	4.3
40	44.8	72.4	73.9	4.0	55.5	69.9	4.3

All dimensions for reference only.

GT06R
straight plug

- **With a wire sealing grommet**
- **Includes a backshell for conduit termination**
- **Environment proof**

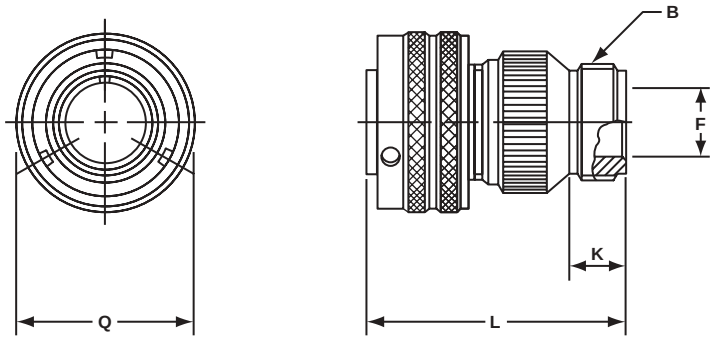

Inches

Shell Size	B Thread Class 2A	F Min.	K Min.	L Max.	Q Max.
10SL	.6250-24UNEF	.409	.374	1.969	.898
14S	.7500-20UNEF	.520	.374	1.969	1.150
16S	.8750-20UNEF	.638	.374	1.969	1.260
16	.8750-20UNEF	.638	.374	2.362	1.260
18	1.0000-20UNEF	.756	.374	2.362	1.437
20	1.1875-18UNEF	.867	.374	2.362	1.571
22	1.1875-18UNEF	.965	.374	2.362	1.697
24	1.4375-18UNEF	1.094	.374	2.560	1.835
28	1.4375-18UNEF	1.228	.374	2.560	2.102
32	1.7500-18UNS	1.488	.433	2.560	2.366
36	2.0000-18UNS	1.780	.465	3.150	2.610
40	2.2500-16UN	2.016	.465	3.150	2.850

Millimeters

Shell Size	F Min.	K Min.	L Max.	Q Max.
10SL	10.4	9.5	50	22.8
14S	13.2	9.5	50	29.2
16S	16.2	9.5	50	32.0
16	16.2	9.5	60	32.0
18	19.2	9.5	60	36.5
20	22.0	9.5	60	39.9
22	24.5	9.5	60	43.1
24	27.8	9.5	65	46.6
28	31.2	9.5	65	53.4
32	37.8	11.0	65	60.1
36	45.2	11.8	80	66.3
40	51.2	11.8	80	72.4

All dimensions for reference only.

GT06RV
straight plug

- **With a wire sealing grommet**
- **For use with individual wires**
- **Environment proof**

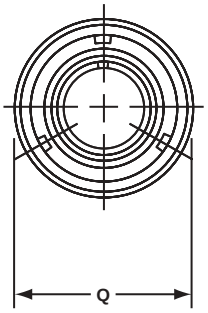

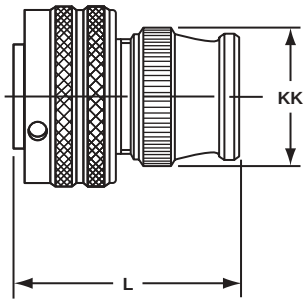

Inches

Shell Size	L Max.	Q Max.	KK Max.
10SL	1.417	.898	.787
14S	1.437	1.150	.945
16S	1.437	1.260	1.024
16	1.929	1.260	1.024
18	1.929	1.437	1.161
20	1.969	1.571	1.299
22	1.969	1.697	1.417
24	2.008	1.835	1.543
28	2.008	2.102	1.811
32	2.087	2.366	2.028
36	2.106	2.610	2.283
40	2.126	2.850	2.539

Millimeters

Shell Size	L Max.	Q Max.	KK Max.
10SL	36.0	22.8	20.0
14S	36.5	29.2	24.0
16S	36.5	32.0	26.0
16	49.0	32.0	26.0
18	49.0	36.5	29.5
20	50.0	39.9	33.0
22	50.0	43.1	36.0
24	51.0	46.6	40.0
28	51.0	53.4	46.0
32	53.0	60.1	51.5
36	53.5	66.3	58.0
40	54.0	72.4	64.5

All dimensions for reference only.

GT06SB
straight plug

- **For termination of shielded braid and heatshrink tube or boot.**
- **With individual wire sealing grommet**
- **Environment proof**

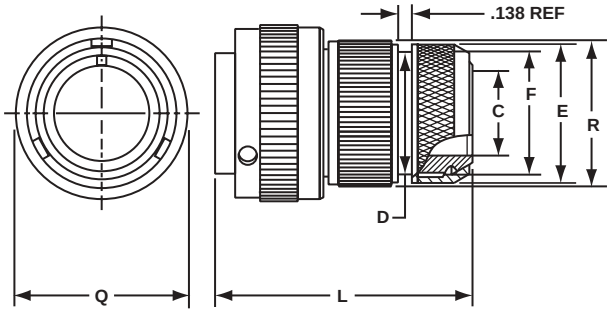

Inches

Shell Size	C Min.	D Max.	E Max.	F Ref.	L Ref.	Q Max.	R Max.
10SL	.303	.641	.775	.625	2.034	.898	.786
14S	.417	.786	.873	.750	2.049	1.150	.944
16S	.531	.905	1.025	.875	2.049	1.299	1.023
16	.531	.905	1.025	.875	2.505	1.299	1.023
18	.637	.965	1.147	1.000	2.552	1.437	1.160
20	.736	1.122	1.305	1.125	2.552	1.571	1.296
22	.819	1.196	1.373	1.250	2.418	1.697	1.416
24	.981	1.364	1.521	1.375	2.632	1.835	1.562
28	1.067	1.476	1.657	1.500	2.566	2.102	1.806
32	1.311	1.732	1.927	1.750	2.628	2.366	2.027
36	1.631	2.007	2.207	2.062	2.676	2.610	2.281
40	1.882	2.283	2.486	2.312	2.628	2.850	2.538

Millimeters

Shell Size	C Min.	D Max.	E Max.	F Ref.	L Ref.	Q Max.	R Max.
10SL	7.7	16.3	19.7	15.9	51.7	22.8	20.0
14S	10.6	20.0	22.2	19.1	52.0	29.2	24.0
16S	13.5	23.0	26.0	22.2	52.0	32.0	26.0
16	13.5	23.0	26.0	22.2	63.6	32.0	26.0
18	16.2	24.5	29.1	25.4	64.8	36.5	29.5
20	18.7	28.5	33.1	28.6	64.8	39.9	32.9
22	20.8	30.4	34.9	31.8	61.4	43.1	36.0
24	24.9	34.6	38.6	34.9	66.8	46.6	39.7
28	27.1	37.5	42.5	38.1	65.2	53.4	45.9
32	33.3	44.0	48.9	44.5	66.8	60.1	51.5
36	41.4	51.0	56.1	52.4	68.0	66.3	57.9
40	47.8	58.0	63.1	58.7	66.8	72.5	64.5

All dimensions for reference only.

GT06SBT
straight plug

- **For termination of shielded braid and heatshrink tube or boot**
- **With wire sealing grommet**
- **Environment proof**

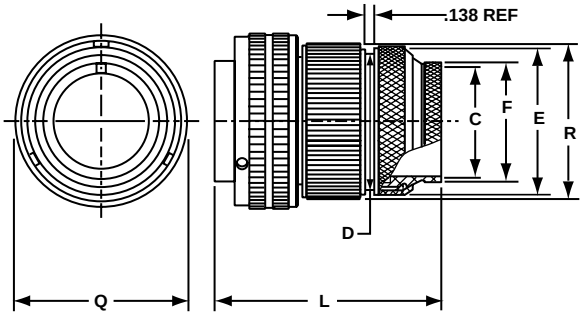

Inches

Shell Size	C Min.	D Max.	E Max.	F Ref.	L Ref.	Q Max.	R Max.
10SL	.303	.641	.775	.437	2.401	.898	.786
14S	.417	.768	.873	.563	2.520	1.150	.944
16S	.531	.905	1.025	.626	2.756	1.299	1.023
16	.531	.905	1.025	.626	3.150	1.299	1.023
18	.637	.965	1.147	.752	3.150	1.437	1.160
20	.736	1.122	1.305	.878	3.150	1.571	1.296
22	.819	1.196	1.373	1.000	3.150	1.697	1.416
24	.981	1.364	1.521	1.126	3.150	1.835	1.562
28	1.067	1.476	1.657	1.252	3.150	2.102	1.806
32	1.311	1.732	1.927	1.252	3.150	2.366	2.027
36	1.631	2.007	2.207	1.752	3.350	2.610	2.281
40	1.882	2.283	2.486	2.000	3.350	2.850	2.538

Millimeters

Shell Size	C Min.	D Max.	E Max.	F Ref.	L Ref.	Q Max.	R Max.
10SL	7.7	16.3	19.7	11.1	61.0	22.8	20.0
14S	10.6	20.0	22.2	14.3	64.0	29.2	24.0
16S	13.5	23.0	26.0	15.9	71.0	32.0	26.0
16	13.5	23.0	26.0	15.9	80.0	32.0	26.0
18	16.2	24.5	29.1	19.1	80.0	36.5	29.5
20	18.7	28.5	33.1	22.3	80.0	39.9	32.9
22	20.8	30.4	34.9	25.4	80.0	43.1	36.0
24	24.9	34.6	38.6	28.6	80.0	46.6	39.7
28	27.1	37.5	42.5	31.8	80.0	53.4	45.9
32	33.3	44.0	48.9	31.8	80.0	60.1	51.5
36	41.4	51.0	56.1	44.5	85.1	66.3	57.9
40	47.8	58.0	63.1	50.8	85.1	72.5	64.5

All dimensions for reference only.

GT065SL(*)
straight plug

- **Includes a long heavy duty coupling nut**
- **Includes a liquid tight strain relief to grip and seal jacketed cable**
- **Environment proof**

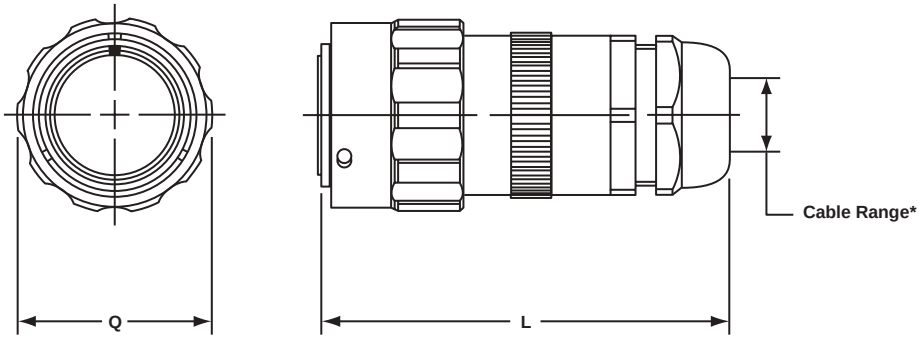

Inches

Shell Size	L Ref.	Q Max.	Cable Range (1)*	Cable Range (2)*
10SL	3.516	1.007	.11–.26	.07–.12
14S	3.628	1.259	.15–.32	.07–.24
16S	3.808	1.410	.19–.39	.11–.28
16	4.355	1.410	.19–.39	.11–.28
18	4.249	1.547	.23–.47	.19–.35
20	4.255	1.681	.39–.56	.27–.47
22	4.329	1.847	.51–.71	.35–.63
24	4.816	1.965	.51–.71	.35–.63
28	4.817	2.222	.70–.98	.51–.79
32	4.817	2.482	.86–1.26	.78–1.02
36	5.048	2.721	1.26–1.50	.98–1.22
40	4.978	2.953	1.45–1.75	1.14–1.38

Millimeters

Shell Size	L Ref.	Q Max.	Cable Range (1)*	Cable Range (2)*
10SL	89.3	25.5	2.7–6.6	1.7–3.0
14S	92.1	31.9	3.8–8.1	1.7–6.0
16S	96.7	35.8	4.8–9.9	2.7–7.1
16	110.6	35.8	4.8–9.9	2.7–7.1
18	107.9	39.2	5.8–11.9	4.8–8.8
20	108.0	42.6	9.9–14.2	6.8–11.9
22	109.9	46.9	12.9–18.0	8.8–16.0
24	122.3	49.9	12.9–18.0	8.8–16.0
28	122.3	56.4	17.7–24.8	12.9–20.0
32	122.3	63.0	21.8–32.0	19.8–25.9
36	128.2	69.1	32.0–38.1	24.8–30.9
40	126.4	75.0	36.8–44.4	28.9–35.05

All dimensions for reference only. * Add suffix 1 or 2 for desired cable range.

GT07R
jam nut receptacle

- **For rear panel single hole mounting**
- **Panel seal O-ring included**
- **Environment proof**

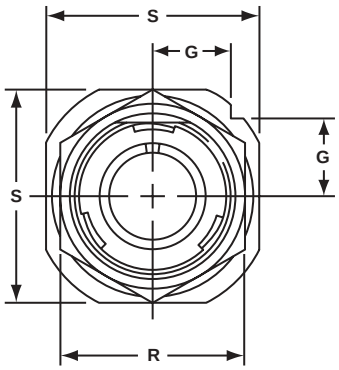

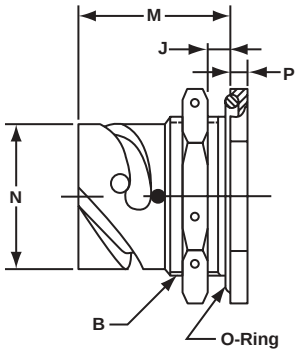

Inches

Shell Size	B Thread Class 2A	G ± .012	J Wall Thickness Min.	J Wall Thickness Max.	M ± .012	N + .000 – .006	P ± .007	R ± .016	S ± .012
10SL	.8750-20 UNEF	.441	.094	.205	.965	.717	.157	1.062	1.252
14S	1.1250-18 UNEF	.575	.094	.295	1.055	.969	.189	1.312	1.626
16S	1.2500-18 UNEF	.618	.094	.295	1.055	1.079	.189	1.500	1.748
16	1.2500-18 UNEF	.618	.094	.295	1.264	1.079	.189	1.500	1.748
18	1.3750-18 UNEF	.661	.094	.354	1.327	1.213	.189	1.562	1.875
20	1.5000-18 UNEF	.709	.094	.358	1.327	1.346	.189	1.750	2.000
22	1.6250-18 UNEF	.795	.094	.358	1.327	1.472	.189	2.000	2.134
24	1.7500-18 UNEF	.795	.094	.358	1.327	1.610	.189	2.000	2.252
28	2.0000-18 UNS	.886	.094	.394	1.386	1.839	.220	2.188	2.500
32	2.2500-16 UN	.972	.094	.394	1.386	2.102	.220	2.438	2.748
36	2.5000-16 UN	1.059	.094	.327	1.386	2.346	.220	2.812	3.000
40	2.7500-16 UN	1.165	.094	.327	1.386	2.579	.220	2.953	3.248

Millimeters

Shell Size	G ± 0.3	J Wall Thickness Min.	J Wall Thickness Max.	M ± 0.3	N + 0.00 – 0.15	P ± 0.2	R ± 0.4	S ± 0.3
10SL	11.2	2.4	5.2	24.5	18.2	4.0	27	31.8
14S	14.6	2.4	7.5	26.8	24.6	4.8	33	41.3
16S	15.7	2.4	7.5	26.8	27.4	4.8	38	44.4
16	15.7	2.4	7.5	32.1	27.4	4.8	38	44.4
18	16.8	2.4	9.0	33.7	30.8	4.8	40	47.6
20	18.0	2.4	9.1	33.7	34.2	4.8	44	50.8
22	20.2	2.4	9.1	33.7	37.4	4.8	51	54.2
24	20.2	2.4	9.1	33.7	40.9	4.8	51	57.2
28	22.5	2.4	10.0	35.2	46.7	5.6	56	63.5
32	24.7	2.4	10.0	35.2	53.4	5.6	62	69.8
36	26.9	2.4	8.3	35.2	59.6	5.6	71	76.2
40	29.6	2.4	8.3	35.2	65.5	5.6	75	82.5

All dimensions for reference only.

GT070
jam nut receptacle

- **For rear panel single hole mounting**
- **Threaded rear for accessories**
- **Environment proof**

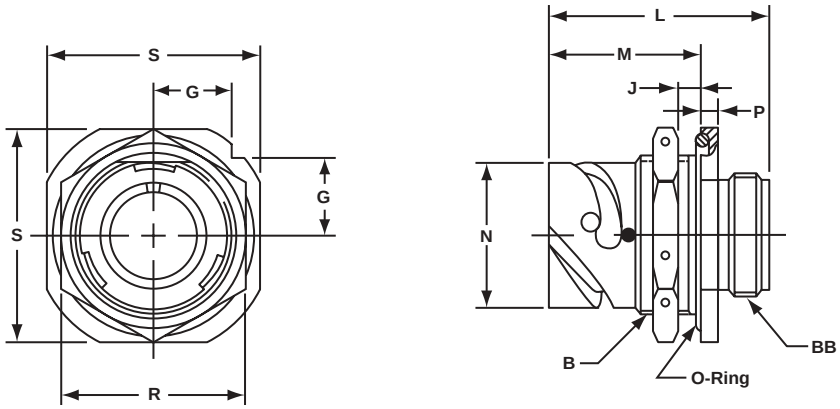

Inches

Shell Size	B Thread Class 2A	G ± .012	J Wall Thickness Min.	J Wall Thickness Max.	L ± .010	M ± .012	N + .000 – .006	P ± .007	R ± .016	S ± .012	BB Thread Class 2A
10SL	.8750-20 UNEF	.441	.094	.205	1.425	.965	.717	.157	1.062	1.252	.6250-24 UNEF
14S	1.1250-18 UNEF	.575	.094	.295	1.531	1.055	.969	.189	1.312	1.626	.7500-20 UNEF
16S	1.2500-18 UNEF	.618	.094	.295	1.531	1.055	1.079	.189	1.500	1.748	.8750-20 UNEF
16	1.2500-18 UNEF	.618	.094	.295	1.909	1.264	1.079	.189	1.500	1.748	.8750-20 UNEF
18	1.3750-18 UNEF	.661	.094	.354	1.941	1.327	1.213	.189	1.562	1.875	1.0000-20 UNEF
20	1.5000-18 UNEF	.709	.094	.358	1.941	1.327	1.346	.189	1.750	2.000	1.1250-18 UNEF
22	1.6250-18 UNEF	.795	.094	.358	1.941	1.327	1.472	.189	2.000	2.134	1.2500-18 UNEF
24	1.7500-18 UNEF	.795	.094	.358	1.953	1.327	1.610	.189	2.000	2.252	1.3750-18 UNEF
28	2.0000-18 UNS	.886	.094	.394	2.043	1.386	1.839	.220	2.188	2.500	1.6250-18 UNEF
32	2.2500-16 UN	.972	.094	.394	2.043	1.386	2.102	.220	2.438	2.748	1.8750-16 UN
36	2.5000-16 UN	1.059	.094	.327	2.043	1.386	2.346	.220	2.812	3.000	2.0625-16 UN
40	2.7500-16 UN	1.165	.094	.327	2.043	1.386	2.579	.220	2.953	3.248	2.3125-16 UN

Millimeters

Shell Size	G ± 0.3	J Wall Thickness Min.	J Wall Thickness Max.	L ± 0.3	M ± 0.3	N + 0.00 – 0.15	P ± 0.2	R ± 0.4	S ± 0.3
10SL	11.2	2.4	5.2	36.2	24.5	18.2	4.0	27	31.8
14S	14.6	2.4	7.5	38.9	26.8	24.6	4.8	33	41.3
16S	15.7	2.4	7.5	38.9	26.8	27.4	4.8	38	44.4
16	15.7	2.4	7.5	48.5	32.1	27.4	4.8	38	44.4
18	16.8	2.4	9.0	49.3	33.7	30.8	4.8	40	47.6
20	18.0	2.4	9.1	49.3	33.7	34.2	4.8	44	50.8
22	20.2	2.4	9.1	49.3	33.7	37.4	4.8	51	54.2
24	20.2	2.4	9.1	49.6	33.7	40.9	4.8	51	57.2
28	22.5	2.4	10.0	51.9	35.2	46.7	5.6	56	63.5
32	24.7	2.4	10.0	51.9	35.2	53.4	5.6	62	69.8
36	26.9	2.4	8.3	51.9	35.2	59.6	5.6	71	76.2
40	29.6	2.4	8.3	51.9	35.2	65.5	5.6	75	82.5

All dimensions for reference only.

GT08A
90° angle plug

- **Without a wire sealing grommet or clamp**
- **Non-environment proof**
- **If a cable clamp is required, see pages 82 and 84**

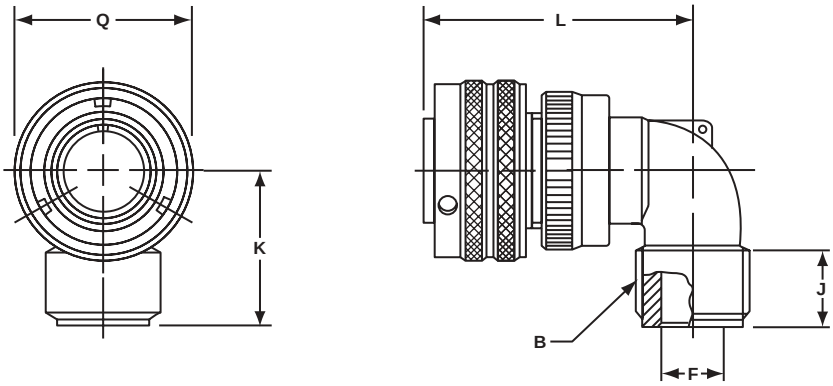

Inches

Shell Size	B Thread Class 2A	F Max.	J Min.	K Max.	L Max.	Q Max.
10SL	.6250-24UNEF	.337	.370	1.181	1.772	.898
14S	.7500-20UNEF	.462	.370	1.181	1.850	1.150
16S	.8750-20UNEF	.587	.370	1.181	1.890	1.299
16	.8750-20UNEF	.587	.370	1.181	2.244	1.299
18	1.0000-20UNEF	.685	.370	1.378	2.283	1.437
20	1.1875-18UNEF	.810	.370	1.378	2.402	1.571
22	1.1875-18UNEF	.915	.370	1.378	2.402	1.697
24	1.4375-18UNEF	1.025	.370	1.575	2.598	1.835
28	1.4375-18UNEF	1.139	.370	1.575	2.598	2.102
32	1.7500-18UNS	1.447	.433	1.772	2.835	2.366
36	2.0000-18UNS	1.687	.496	1.969	2.953	2.610
40	2.2500-16UN	1.923	.496	2.165	3.071	2.850

Millimeters

Shell Size	F Max.	J Min.	K Max.	L Max.	Q Max.
10SL	8.5	9.4	30	45	22.8
14S	11.7	9.4	30	47	29.2
16S	14.9	9.4	30	48	33.0
16	14.9	9.4	30	57	33.0
18	17.4	9.4	35	58	36.5
20	20.5	9.4	35	61	39.9
22	23.2	9.4	35	61	43.1
24	26.0	9.4	40	66	46.6
28	28.9	9.4	40	66	53.4
32	36.7	11.0	45	72	60.1
36	42.8	12.6	50	75	66.3
40	48.8	12.6	55	78	72.4

All dimensions for reference only.

GT08AF/08F
90° angle plug

GT08AF
- **With a cable clamp**
- **Wire sealing grommet not included**
- **Non-environment proof**

GT08F
- **With a wire sealing grommet and cable clamp**
- **For use with individual wires**
- **Environment proof**

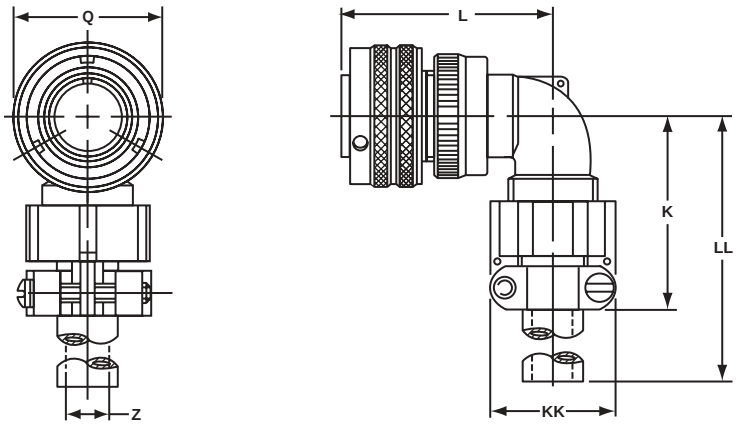

Inches

Shell Size	K Max.	L Max.	Q Max.	Z Max.	KK Max.	LL Max.
10SL	1.654	1.772	.898	.220	.894	3.937
14S	1.654	1.850	1.150	.312	1.083	3.937
16S	1.772	1.890	1.299	.437	1.181	3.937
16	1.772	2.244	1.299	.437	1.181	3.937
18	2.087	2.283	1.437	.562	1.299	3.937
20	2.087	2.402	1.571	.625	1.476	3.937
22	2.087	2.402	1.697	.625	1.476	3.937
24	2.283	2.598	1.835	.750	1.705	3.937
28	2.283	2.598	2.102	.750	1.705	3.937
32	2.598	2.835	2.366	.937	2.061	4.331
36	2.717	2.953	2.610	1.250	2.283	4.331
40	3.740	3.071	2.850	1.375	2.579	5.512

Millimeters

Shell Size	K Max.	L Max.	Q Max.	Z Max.	KK Max.	LL Max.
10SL	42	45	22.8	5.58	22.7	100
14S	42	47	29.2	7.92	27.5	100
16S	45	48	33.0	11.09	30.0	100
16	45	57	33.0	11.09	30.0	100
18	53	58	36.5	14.27	33.0	100
20	53	61	39.9	15.87	37.5	100
22	53	61	43.1	15.87	37.5	100
24	58	66	46.6	19.05	43.3	100
28	58	66	53.4	19.05	43.3	100
32	66	72	60.1	23.79	51.7	110
36	69	75	66.3	31.75	58.0	110
40	95	78	72.4	34.92	65.5	140

All dimensions for reference only.

GT08CFGG
90° angle plug

- **Rubber covered coupling nut provides superior gripping surface and seals beyond ramps**
- **Includes clamp to grip and seal jacketed cable**
- **Mates with GT020RFSM (see page 44)**
- **Environment proof**

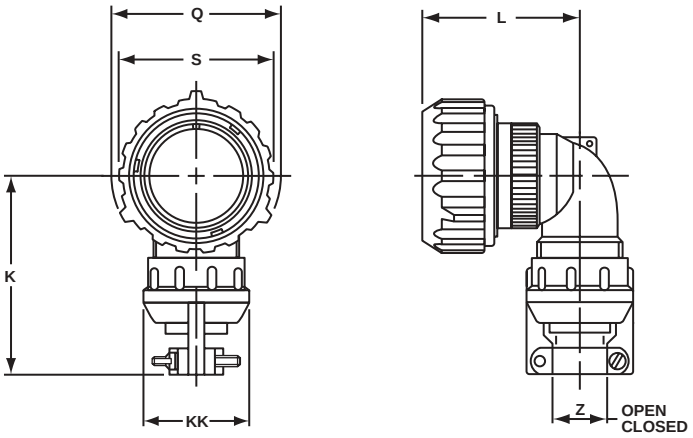

Inches

Shell Size*	K Max.	L Max.	Q Dia.	S Dia.	Z Open	Z Closed	KK ± .008
10SL	2.402	1.929	1.319	1.122	.312	.094	.890
18	2.677	2.520	1.929	1.713	.625	.378	1.220
20	2.677	2.638	2.028	1.811	.748	.445	1.469
22	2.677	2.638	2.205	1.988	.748	.445	1.469
24	2.992	2.874	2.362	2.126	.937	.610	1.654
28	2.992	2.874	2.638	2.402	.937	.610	1.654
32	3.425	3.071	2.992	2.661	1.250	.921	2.126
36	3.858	3.189	3.240	2.925	1.378	.921	2.248
40	4.055	3.307	3.465	3.150	1.624	1.177	2.500

Millimeters

Shell Size*	K Max.	L Max.	Q Dia.	S Dia.	Z Open	Z Closed	KK ± 0.2
10SL	61	49	33.5	28.5	7.93	2.38	22.6
18	68	64	49.0	43.5	15.87	9.60	31.0
20	68	67	51.5	46.0	19.00	11.30	37.3
22	68	67	56.0	50.5	19.00	11.30	37.3
24	76	73	60.0	54.0	23.80	15.50	42.0
28	76	73	67.0	61.0	23.80	15.50	42.0
32	87	78	76.0	67.6	31.75	23.40	54.0
36	98	81	82.3	74.3	35.00	23.40	57.1
40	103	84	88.0	80.0	41.25	29.90	63.5

All dimensions for reference only.
* 14s, 16s and 16 shell sizes are available upon request.

GT08LT
90° angle plug

- **For termination of metallic core conduit**
- **With individual wire sealing grommet**
- **Environment proof**

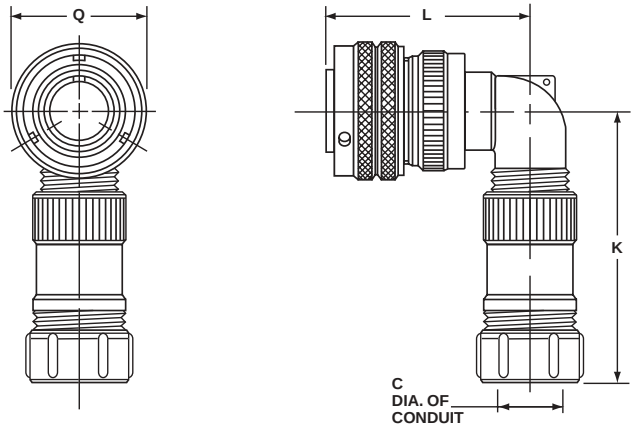

Inches

Shell Size	K Max.	L Max.	Q Max.
10SL	Dependent on Conduit and Shell Combination Consult Amphenol, Sidney, NY for further information	1.772	.898
14S		1.850	1.150
16S		1.890	1.299
16		2.244	1.299
18		2.283	1.437
20		2.402	1.571
22		2.402	1.697
24		2.598	1.835
28		2.598	2.102
32		2.835	2.366
36		2.953	2.610
40		3.071	2.850

Inches

C Conduit Size
3/8
1/2
3/4
1
1-1/4
1-1/2
2

Millimeters

Shell Size	K Max.	L Max.	Q Max.
10SL	Dependent on Conduit and Shell Combination Consult Amphenol, Sidney, NY for further information	45.01	22.81
14S		46.99	29.21
16S		48.01	32.99
16		57.00	32.99
18		57.99	36.50
20		61.01	39.90
22		61.01	43.10
24		65.99	46.61
28		65.99	53.39
32		72.01	60.10
36		75.01	66.29
40		78.00	72.39

Millimeters

C Conduit Size
9.53
12.70
19.05
25.40
31.75
38.10
50.80

All dimensions for reference only.

GT08PFC
90° angle plug

- **For termination of plastic flexible corrugated conduit**
- **With individual wire sealing grommet**
- **Environment proof**

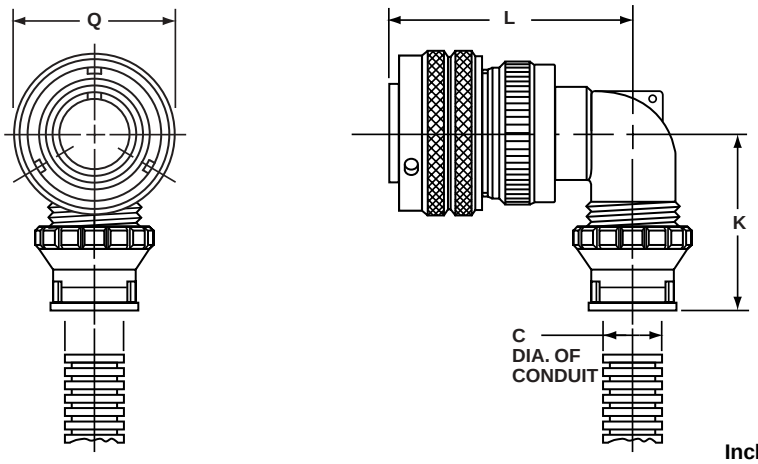

Inches

Shell Size	C Conduit Size	K Max.	L Max.	Q Max.
10SL	Wide Variety of Sizes Consult Amphenol, Sidney, NY for further information	Dependent on Conduit and Shell Combination Consult Amphenol, Sidney, NY for further information	1.772	.898
14S			1.850	1.150
16S			1.890	1.299
16			2.244	1.299
18			2.283	1.437
20			2.402	1.571
22			2.402	1.697
24			2.598	1.835
28			2.598	2.102
32			2.835	2.366
36			2.953	2.610
40			3.071	2.850

Millimeters

Shell Size	C Conduit Size	K Max.	L Max.	Q Max.
10SL	Wide Variety of Sizes Consult Amphenol, Sidney, NY for further information	Dependent on Conduit and Shell Combination Consult Amphenol, Sidney, NY for further information	45.01	22.81
14S			46.99	29.21
16S			48.01	32.99
16			57.00	32.99
18			57.99	36.50
20			61.01	39.90
22			61.01	43.10
24			65.99	46.61
28			65.99	53.39
32			72.01	60.10
36			75.01	66.29
40			78.00	72.39

All dimensions for reference only.

GT08R
90° angle plug

- **With a wire sealing grommet for conduit termination**
- **For use with individual wires**
- **Environment proof**

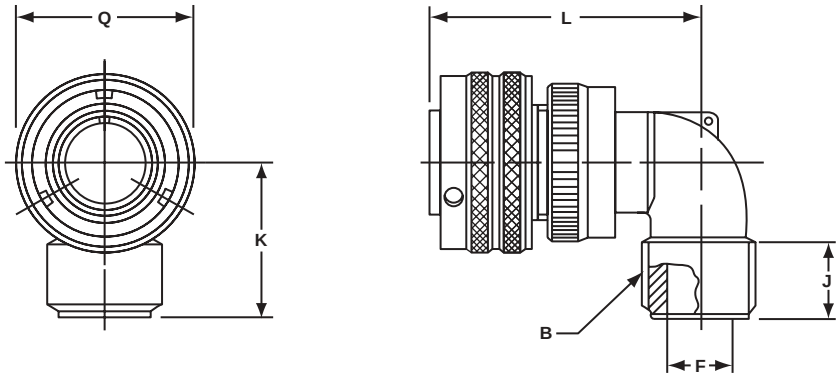

Inches

Shell Size	B Thread Class 2A	F Max.	J Min.	K Max.	L Max.	Q Max.
10SL	.6250-24UNEF	.337	.370	1.181	1.772	.898
14S	.7500-20UNEF	.462	.370	1.181	1.850	1.150
16S	.8750-20UNEF	.587	.370	1.181	1.890	1.299
16	.8750-20UNEF	.587	.370	1.181	2.244	1.299
18	1.0000-20UNEF	.685	.370	1.378	2.283	1.437
20	1.1875-18UNEF	.810	.370	1.378	2.402	1.571
22	1.1875-18UNEF	.915	.370	1.378	2.402	1.697
24	1.4375-18UNEF	1.025	.370	1.575	2.598	1.835
28	1.4375-18UNEF	1.139	.370	1.575	2.598	2.102
32	1.7500-18UNS	1.447	.433	1.772	2.835	2.366
36	2.0000-18UNS	1.687	.496	1.969	2.953	2.610
40	2.2500-16UN	1.923	.496	2.165	3.071	2.850

Millimeters

Shell Size	F Max.	J Min.	K Max.	L Max.	Q Max.
10SL	8.5	9.4	30	45	22.8
14S	11.7	9.4	30	47	29.2
16S	14.9	9.4	30	48	33.0
16	14.9	9.4	30	57	33.0
18	17.4	9.4	35	58	36.5
20	20.5	9.4	35	61	39.9
22	23.2	9.4	35	61	43.1
24	26.0	9.4	40	66	46.6
28	28.9	9.4	40	66	53.4
32	36.7	11.0	45	72	60.1
36	42.8	12.6	50	75	66.3
40	48.8	12.6	55	78	72.4

All dimensions for reference only.

GT05
dummy receptacle

- **Square flange**
- **Four through mounting holes**
- **Stows cable plugs when not in use**

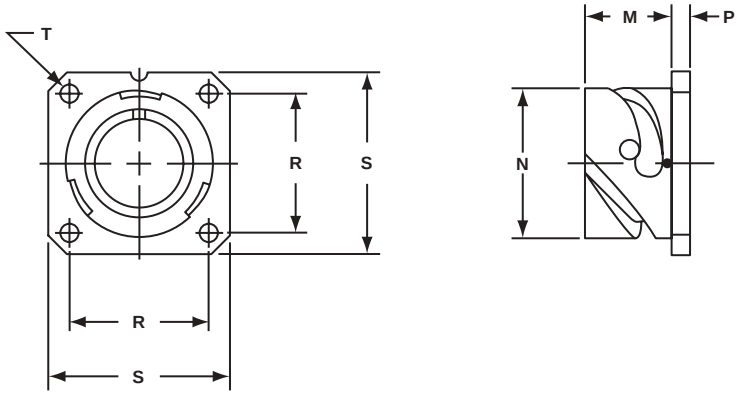

Inches

Shell Size	M + .016 – .000	N + .000 – .006	P ± .008	R ± .004	S ± .012	T + .004 – .000
10SL	.559	.717	.110	.717	1.000	.126
14S	.559	.969	.126	.906	1.181	.126
16S	.559	1.079	.126	.969	1.280	.126
16	.748	1.079	.126	.969	1.280	.126
18	.748	1.213	.157	1.063	1.378	.126
20	.748	1.346	.157	1.157	1.496	.126
22	.748	1.472	.157	1.252	1.614	.126
24	.811	1.610	.157	1.374	1.752	.146
28	.811	1.839	.157	1.563	2.000	.146
32	.874	2.102	.157	1.752	2.244	.169
36	.874	2.346	.157	1.937	2.500	.169
40	.874	2.579	.157	2.185	2.752	.169

Millimeters

Shell Size	M + 0.4 – 0.0	N + 0.00 – 0.15	P ± 0.2	R ± 0.1	S ± 0.3	T + 0.1 – 0.0
10SL	14.2	18.2	2.8	18.2	25.4	3.2
14S	14.2	24.6	3.2	23.0	30.0	3.2
16S	14.2	27.4	3.2	24.6	32.5	3.2
16	19.0	27.4	3.2	24.6	32.5	3.2
18	19.0	30.8	4.0	27.0	35.0	3.2
20	19.0	34.2	4.0	29.4	38.0	3.2
22	19.0	37.4	4.0	31.8	41.0	3.2
24	20.6	40.9	4.0	34.9	44.5	3.7
28	20.6	46.7	4.0	39.7	50.8	3.7
32	22.2	53.4	4.0	44.5	57.0	4.3
36	22.2	59.6	4.0	49.2	63.5	4.3
40	22.2	65.5	4.0	55.5	69.9	4.3

All dimensions for reference only.

GTTB
thru-bulkhead receptacles

- **Accepts mating plug on both sides**
- **Four through mounting holes**

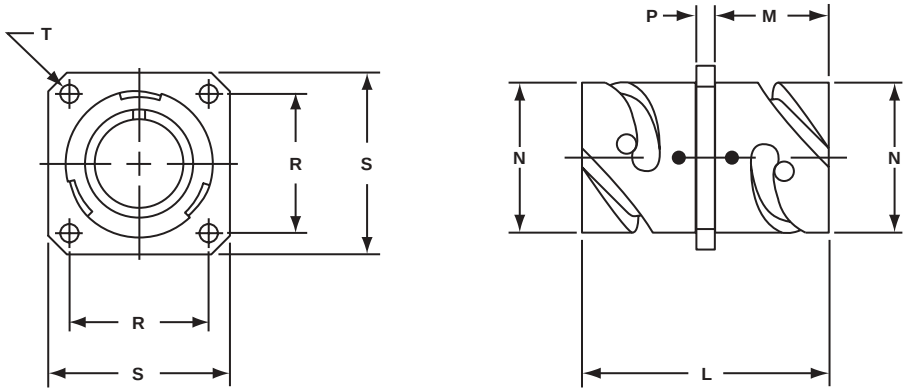

Inches

Shell Size	L Max.	M + .016 – .000	N + .000 – .006	P ± .008	R ± .004	S ± .012	T + .004 – .000
10SL	1.488	.717	.717	.110	.717	1.000	.126
14S	1.488	.717	.969	.126	.906	1.181	.126
16S	1.488	.717	1.079	.126	.969	1.280	.126
16	2.049	.846	1.079	.126	.969	1.280	.126
18	2.049	.907	1.213	.157	1.063	1.378	.126
20	2.049	.907	1.346	.157	1.157	1.496	.126
22	2.049	.907	1.472	.157	1.252	1.614	.126
24	2.049	.907	1.610	.157	1.374	1.752	.146
28	2.049	.947	1.839	.157	1.563	2.000	.146
32	2.049	.947	2.102	.157	1.752	2.244	.169
36	2.049	.947	2.346	.157	1.937	2.500	.169
40	2.049	.947	2.579	.157	2.185	2.752	.169

Millimeters

Shell Size	L Max.	M + 0.4 – 0.0	N + 0.00 – 0.15	P ± 0.2	R ± 0.1	S ± 0.3	T + .004 – .000
10SL	37.7	18.2	18.2	2.8	18.2	25.4	3.2
14S	37.7	18.2	24.6	3.2	23.0	30.0	3.2
16S	37.7	18.2	27.4	3.2	24.6	32.5	3.2
16	52.0	21.5	27.4	3.2	24.6	32.5	3.2
18	52.0	23.0	30.8	4.0	27.0	35.0	3.2
20	52.0	23.0	34.2	4.0	29.4	38.0	3.2
22	52.0	23.0	37.4	4.0	31.8	41.0	3.2
24	52.0	23.0	40.9	4.0	34.9	44.5	3.7
28	52.0	24.0	46.7	4.0	39.7	50.8	3.7
32	52.0	24.0	53.4	4.0	44.5	57.0	4.3
36	52.0	24.0	59.6	4.0	49.2	63.5	4.3
40	52.0	24.0	65.5	4.0	55.5	69.9	4.3

All dimensions for reference only.

GT Connectors – accessories

10-40450, 10-36675, 10-580649 sealing gaskets

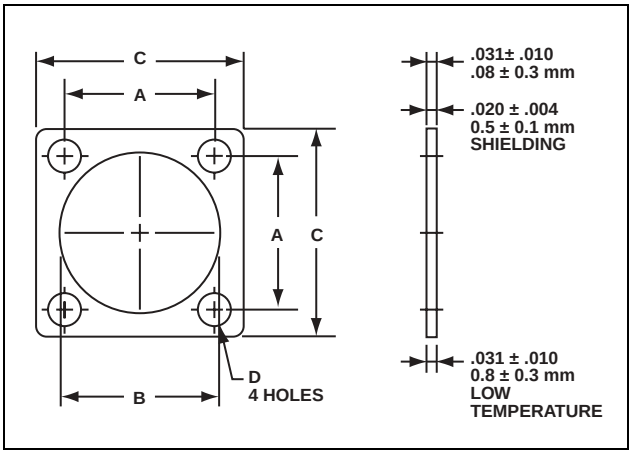

PLAIN FLAT GASKET
The Amphenol® plain flat gasket of synthetic rubber material is provided to take complete advantage of waterproof and pressure sealing features. It is for use with the flange mounted receptacle.

SHIELDING GASKET
This flat gasket is provided to give the maximum in connector performance. Its special feature is in providing the maximum radio shielding under difficult conditions of high receiver sensitivity and low signal strength while retaining the sealing characteristics of the plain gasket. This gasket is for use with the flange mounting receptacle.

LOW TEMPERATURE GASKET
This gasket is provided for applications where the major requirement is resistance to the injurious effects of extremely low temperature. Even at temperatures as low as –67°F this gasket retains its resiliency and will seal a pressure differential of 30 psi.

Additional versions of gaskets are available including low smoke zero halogen, and also high temperature and conductive types. Consult Amphenol Industrial Operations, Sidney NY, for further information.

Installation Dimensions					
MS Shell Size	A ± .010	Front Panel Versions B + .016 – .000	Rear Panel Version B + .016 – .000	C + .016 – .000	D ± .010
10SL	.719	.625	.724	1.000	.172
14S	.906	.875	.976	1.188	.172
16S	.969	1.000	1.087	1.281	.172
16	.969	1.000	1.087	1.281	.172
18	1.063	1.125	1.220	1.375	.203
20	1.156	1.250	1.354	1.500	.203
22	1.250	1.375	1.480	1.625	.203
24	1.375	1.500	1.618	1.750	.203
28	1.563	1.750	1.846	2.000	.203
32	1.750	2.000	2.110	2.250	.219
36	1.938	2.188	2.354	2.500	.219
40	2.188	2.438	2.587	2.750	.219

Installation Dimensions					
MS Shell Size	A ± 0.2	Front Panel Versions B + 0.4 – 0.0	Rear Panel Version B + 0.4 – 0.0	C + 0.4 – 0.0	D ± 0.2
10SL	18.2	15.9	18.4	25.4	4.36
14S	23.0	22.2	24.8	30.2	4.36
16S	24.6	25.4	27.6	32.5	4.36
16	24.6	25.4	27.6	32.5	4.36
18	27.0	28.57	31.0	35.0	5.15
20	29.4	31.75	34.4	38.1	5.15
22	31.8	34.9	37.6	41.2	5.15
24	34.9	38.1	41.1	44.5	5.15
28	39.7	44.45	46.9	50.8	5.15
32	44.5	50.8	53.6	57.2	5.56
36	49.2	55.57	59.8	63.5	5.56
40	55.6	61.92	65.7	69.9	5.56

Order Data for Front Panel Mount Gaskets			
Front Panel Plain Version	Front Panel Shielding Version	Front Panel Low Temperature Version	Front Panel Low Smoke ZH Version
10-40450-10	10-40450-10S	10-36675-10	LS-40450-10
10-40450-14	10-40450-14S	10-36675-14	LS-40450-14
10-40450-16	10-40450-16S	10-36675-16	LS-40450-16
10-40450-18	10-40450-18S	10-36675-18	LS-40450-18
10-40450-20	10-40450-20S	10-36675-20	LS-40450-20
10-40450-22	10-40450-22S	10-36675-22	LS-40450-22
10-40450-24	10-40450-24S	10-36675-24	LS-40450-24
10-40450-28	10-40450-28S	10-36675-28	LS-40450-26
10-40450-32	10-40450-32S	10-36675-32	LS-40450-32
10-40450-36	10-40450-36S	10-36675-36	LS-40450-36
10-40450-40	10-40450-40S	10-36675-40	LS-40450-40

Order Data for Rear Panel Mount Gaskets	
Rear Panel Plain Version	Rear Panel Low Smoke ZH Version
10-580649-11	LS-580649-11
10-580649-14	LS-580649-14
10-580649-16	LS-580649-16
10-580649-18	LS-580649-18
10-580649-20	LS-580649-20
10-580649-22	LS-580649-22
10-580649-24	LS-580649-24
10-580649-26	LS-580649-26
10-580649-32	LS-580649-32
10-580649-36	LS-580649-36
10-580649-40	LS-580649-40

GT Connectors – accessories
receptacle protection caps

- **Protective metal caps which seal the front of receptacles**
- **Includes a chain for retention of the cap at the required location**
- **For receptacles: GT00, 01, 02, 020, 030, 070**

*** 10-580902-XXX**

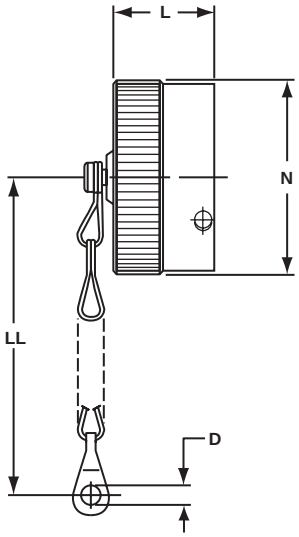

* To complete order number, add shell size and suffix number. For example, shell size 11 with olive drab cadmium plate would be 10-580902-113.

Inches

Shell Size	D + .020 – .000	L Max.	N Max.	LL Approx.
11	.173	.700	.905	5.000
14	.173	.700	1.181	5.000
16	.173	.700	1.280	5.000
17	.173	.900	1.280	5.000
18	.173	.900	1.457	5.000
20	.173	.900	1.594	5.000
22	.173	.900	1.713	5.000
24	.173	.900	1.850	5.000
28	.220	.900	2.126	7.480
32	.261	.900	2.382	7.480
36	.261	.900	2.638	7.480
40	.261	.900	2.874	7.480

Millimeters

Shell Size	D + 0.5 – 0.0	L Max.	N Max.	LL Approx.
11	4.4	17.8	23.0	127
14	4.4	17.8	30.0	127
16	4.4	17.8	32.5	127
17	4.4	22.9	32.5	127
18	4.4	22.9	37.0	127
20	4.4	22.9	40.5	127
22	4.4	22.9	43.5	127
24	4.4	22.9	47.0	127
28	5.6	22.9	54.0	190
32	5.6	22.9	60.5	190
36	5.6	22.9	67.0	175
40	5.6	22.9	73.0	190

All dimensions for reference only.

Finish	Suffix
Black anodize	-XXZ
Olive drab cadmium plate	-XX3
Olive drab cadmium nickel base	-XX9
Electroless nickel	-XXG
Green zinc cobalt	-XXU
Black zinc cobalt	-XXY

GT Connectors – accessories
plug protection caps

- **Protective metal caps which seal the front of plugs**
- **Includes a chain for retention of the cap at the required location**
- **For plugs: GT06, 08**

*** 10-580903-XXX**

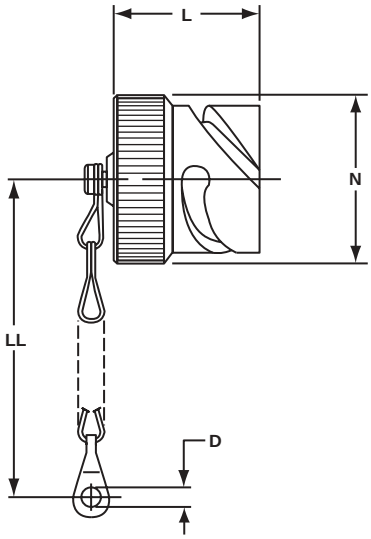

* To complete order number, add shell size and suffix number. For example, shell size 11 with olive drab cadmium plate would be 10-580903-113.

Inches

Shell Size	D + .020 – .000	L Max.	N Max.	LL Approx.
11	.157	.945	.807	5.000
14	.157	.945	1.059	5.000
16	.157	.945	1.169	5.000
17	.157	.945	1.169	5.000
18	.157	.945	1.303	5.000
20	.189	1.260	1.437	5.520
22	.189	1.260	1.563	5.520
24	.189	1.260	1.701	5.520
28	.220	1.260	1.929	7.480
32	.261	1.260	2.193	7.480
36	.261	1.260	2.437	7.480
40	.261	1.260	2.665	7.480

Millimeters

Shell Size	D + 0.5 – 0.0	L Max.	N Max.	LL Approx.
11	4.0	24	20.5	127
14	4.0	24	26.9	127
16	4.0	24	29.7	127
17	4.0	24	29.7	127
18	4.0	24	33.1	127
20	4.8	32	36.5	140
22	4.8	32	39.7	140
24	4.8	32	43.2	140
28	4.8	32	49.0	190
32	5.6	32	55.7	190
36	5.6	32	61.9	190
40	5.6	32	67.7	190

All dimensions for reference only.

Finish	Suffix
Black anodize	-XXZ
Olive drab cadmium plate	-XX3
Olive drab cadmium nickel base	-XX9
Electroless nickel	-XXG
Green zinc cobalt	-XXU
Black zinc cobalt	-XXY

GT Connectors – accessories

MS3057-A style cable clamp

- **Concentric cable clamps, insure strain relief and central location of the cable**
- **Can be used with bushing MS3420**

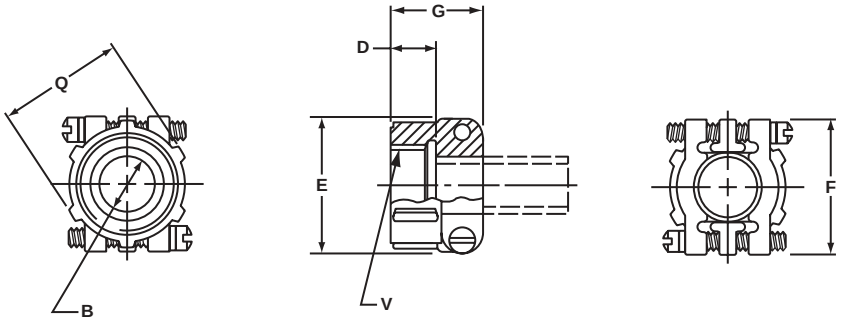

Inches

Part Number	Used with Shell Size	Used with Bushing	B	D	G	F	V Thread Class 2B
97-3057-1004	10SL	MS3420-4	.315	.395	.812	.866	.6250-24 UNEF
97-3057-1007	14S	MS3420-6	.442	.395	.875	1.063	.7500-20 UNEF
97-3057-1008	16 - 16S	MS3420-8	.568	.395	.945	1.145	.8750-20 UNEF
97-3057-1010	18	MS3420-10	.633	.395	.945	1.244	1.0000-20 UNEF
97-3057-1012	20 - 22	MS3420-12	.758	.395	.945	1.475	1.1875-18 UNEF
97-3057-1016	24 - 28	MS3420-16	.948	.395	1.031	1.700	1.4375-18 UNEF
97-3057-1020	32	MS3420-20	1.256	.460	1.094	2.055	1.7500-18 UNS
97-3057-1024	36	MS3420-24	1.380	.520	1.157	2.265	2.0000-18 UNS
10-824810-028	40	MS3420-28	1.625	.520	1.685	2.683	2.2500-16 UN

Millimeters

Part Number	Used with Shell Size	Used with Bushing	B	D	G	F
97-3057-1004	10SL	MS3420-4	8.0	10.0	20.6	22
97-3057-1007	14S	MS3420-6	11.0	10.0	22.2	27
97-3057-1008	16 - 16S	MS3420-8	14.4	10.0	24.0	29
97-3057-1010	18	MS3420-10	16.1	10.0	24.0	32
97-3057-1012	20 - 22	MS3420-12	19.2	10.0	24.0	37
97-3057-1016	24 - 28	MS3420-16	24.1	10.0	26.2	43
97-3057-1020	32	MS3420-20	31.9	11.7	27.8	52
97-3057-1024	36	MS3420-24	35.0	13.2	29.4	58
10-824810-028	40	MS3420-28	41.3	13.2	42.8	68

All dimensions for reference only.

GT Connectors – accessories
MS3420 bushing

- **Bushing of synthetic rubber to be used with cable clamps for protection of the cable or wires**
- **Can be telescoped for smaller cable diameters**

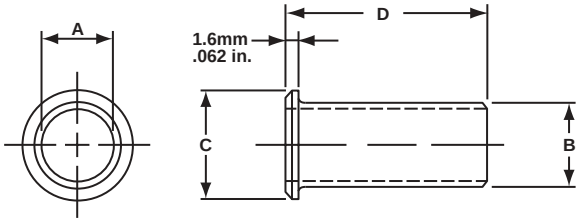

Inches

Part Number	Used with Cable Clamp	A	B	C	D
MS3420-3	M85049/41-3A	.130	.210	.379	2.875
MS3420-4	M85049/41-4A	.220	.302	.505	2.750
MS3420-6	M85049/41-6A	.312	.427	.619	2.625
MS3420-8	M85049/41-8A	.437	.552	.744	2.500
MS3420-10	M85049/41-10A	.562	.615	.889	2.375
MS3420-12	M85049/41-12A	.625	.740	1.084	2.250
MS3420-16	M85049/41-16A	.750	.927	1.314	2.125
MS3420-20	M85049/41-20A	.937	1.240	1.598	2.000
MS3420-24	M85049/41-24A	1.250	1.365	1.847	1.875
MS3420-28	M85049/41-28A	1.375	1.614	2.085	1.750

Millimeters

Part Number	Used with Cable Clamp	A	B	C	D
MS3420-3	M85049/41-3A	3.30	5.3	9.60	73.0
MS3420-4	M85049/41-4A	5.58	7.7	12.80	69.8
MS3420-6	M85049/41-6A	7.92	10.8	15.70	66.8
MS3420-8	M85049/41-8A	11.09	14.0	18.90	63.5
MS3420-10	M85049/41-10A	14.27	15.6	22.58	60.3
MS3420-12	M85049/41-12A	15.87	18.8	27.50	57.1
MS3420-16	M85049/41-16A	19.05	23.5	33.40	53.9
MS3420-20	M85049/41-20A	23.79	31.5	40.60	50.8
MS3420-24	M85049/41-24A	31.75	34.7	46.90	47.6
MS3420-28	M85049/41-28A	34.92	41.0	52.90	44.4

All dimensions for reference only.

GT Connectors – accessories

MS3057-C style (10-350349) cable clamp

- **Waterproof clamp for jacketed cables**
- **Provides mechanical strain relief plus concentric clamping over a wide range of cable sizes**
- **A neoprene* gland seal ensures a waterproof seal on the cable jacket**

* Other materials available

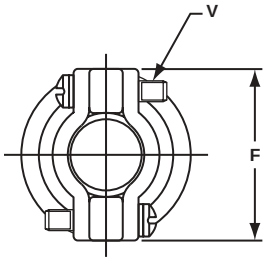

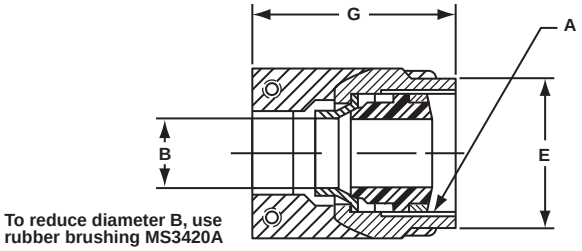

Part Number	Used with Shell Size	A Thread Class 2B in inches	V Thread Class 2A in inches	Used with Bushing	Bushing Opening Inches		Busing Opening Millimeters	
					Open	Closed	Open	Closed
10-350349-123	10SL	.6250-24 UNEF	6-32 UNC	MS3420-4A	.219	.010	5.56	0.25
10-350349-143	14S	.7500-20 UNEF	6-32 UNC	MS3420-6A MS3420-4A	.312 .219	.114 .020	7.93 5.56	2.89 0.50
10-350349-163	16 & 16S	.8750-20 UNEF	6-32 UNC	MS3420-8A MS3420-6A	.437 .312	.220 .085	11.10 7.93	5.60 2.15
10-350349-183	18	1.0000-20 UNEF	6-32 UNC	MS3420-10A MS3420-6A	.437 .312	.197 .085	11.10 7.93	5.00 2.15
10-350349-203	20 & 22	1.1875-18 UNEF	8-32 UNC	MS3420-12A MS3420-8A	.541 .437	.270 .177	13.74 11.10	6.85 4.50
10-350349-243	24 & 28	1.4375-18 UNEF	8-32 UNC	MS3420-16A MS3420-12A MS3420-8A	.748 .541 .437	.429 .260 .186	19.00 13.74 11.10	10.90 6.60 4.72
10-350349-323	32	1.7500-18 UNS	.250-20 UNC	MS3420-20A MS3420-16A MS3420-12A	.937 .748 .541	.620 .441 .273	23.80 19.00 13.74	15.74 11.20 6.93
10-350349-363	36	2.0000-18 UNS	.250-20 UNC	MS3420-24A MS3420-20A MS3420-16A	1.122 .937 .748	.681 .504 .358	28.50 23.80 19.00	17.30 12.80 9.10
10-350349-403	40	2.2500-16 UN	.250-20 UNC	MS3420-28A MS3420-20A MS3420-16A	1.250 .937 .748	.815 512 368	31.75 23.80 19.00	20.70 13.00 9.34

Inches

Part Number	Used with Shell Size	B		E ± .016	F ± .008	G + .020 – .000
		Open	Closed			
10-350349-123	10SL	.312	.094	.748	.890	1.272
10-350349-143	14S	.438	.230	.874	1.016	1.272
10-350349-163	16 & 16S	.531	.315	1.000	1.106	1.272
10-350349-183	18	.625	.378	1.122	1.220	1.390
10-350349-203	20 & 22	.748	.445	1.311	1.469	1.406
10-350349-243	24 &28	.937	.610	1.559	1.654	1.516
10-350349-323	32	1.250	.921	1.874	2.126	1.764
10-350349-363	36	1.378	.921	2.122	2.248	2.031
10-350349-403	40	1.624	1.177	2.374	2.500	2.031

Millimeters

B		E ± 0.4	F ± 0.2	G + 0.5 – 0.0
Open	Closed			
7.93	2.38	19.0	22.6	32.3
11.12	5.84	22.2	25.8	32.3
13.48	8.00	25.4	28.1	32.3
15.87	9.60	28.5	31.0	35.3
19.00	11.30	33.3	37.3	35.7
23.80	15.50	39.6	42.0	38.5
31.75	23.40	47.6	54.0	44.8
35.00	23.40	53.9	57.1	51.6
41.25	29.90	60.3	63.5	51.6

All dimensions for reference only.

GT – accessories

rear mounting data, panel cut-out dimensions, sealing plugs, sealing ranges

REAR MOUNTING DATA
MAXIMUM PANEL THICKNESS

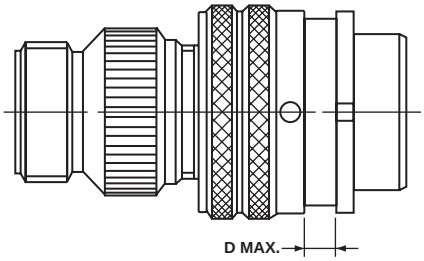

Size	Dimension D			
	GT00/020		GT030	
	Inches	(mm)	Inches	(mm)
10SL	.146	3.70	.303	7.70
14S	.146	3.70	.303	7.70
16S	.146	3.70	.303	7.70
16	.145	3.70	.242	6.15
18	.145	3.70	.303	7.70
20	.145	3.70	.303	7.70
22	.145	3.70	.303	7.70
24	.207	5.25	.303	7.70
28	.207	5.25	.343	8.70
32	.241	6.10	.309	7.85
36	.241	6.10	.309	7.85
40	.237	6.02	.309	7.85

GROMMET HOLE
SEALING RANGES

Hole Size	Sealing Range	
	(mm)	Inches
16	1.62 – 3.3	.064 – .130
12	2.89 – 4.31	.114 – .170
8	4.16 – 6.47	.164 – .255
4	6.9 – 9.3	.272 – .370
0	10.5 – 13.97	.415 – .550

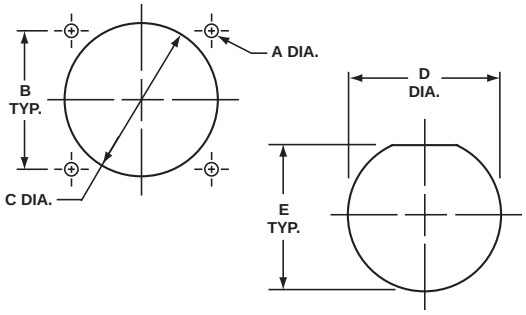

PANEL CUT-OUT DIMENSIONS

Shell Size	A Dia. Hole Size	Connector Styles				
		02, 020, 00, 030	Front Mount 02, 00, 020	Rear Mount 030	Jam Nut 070	Jam Nut 070
		B ±.004	C Dia.	C Dia.	D Dia.	E
10SL	.126	.717	11/16	1 3/4	7/8	.83
14S	.126	.906	13/16	1	1 1/8	1.08
16S/16	.126	.969	15/16	1 1/8	1 1/14	1.21
18	.126	1.063	1 1/16	1 1/4	1 3/8	1.32
20	.126	1.157	1 3/16	1 3/8	1 1/2	1.45
22	.126	1.252	1 5/16	1 1/2	1 5/8	1.57
24	.146	1.374	1 7/16	1 5/8	1 3/4	1.70
28	.146	1.563	1 11/16	1 7/8	2	1.95
32	.169	1.752	1 15/16	2 1/8	2 1/4	2.20
36	.169	1.937	2 1/8	2 3/8	2 1/2	2.45
40	.169	2.185	2 3/8	2 5/8	2 3/4	2.70

All dimensions for reference only.

SEALING PLUG
10-405996-XX

Sealing plugs are used to fill unused holes in multi-holed grommet configurations.

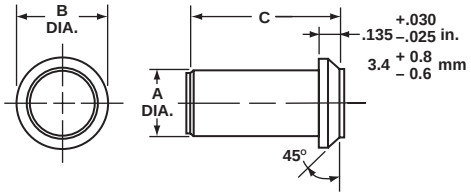

Order No.	Contact Size	Wire Size	Color Code	Inches		
				A Dia. ±.010	B ±.005	C ±.010
10-405996-16	16	20-16	Blue	.083	.133	.564**
10-405996-12	12	14-12	Yellow	.121	.171	.564**
10-405996-8	8	10-8	Red	.185	.315	.470
10-405996-4	4	4-6	Blue	.310	.415	.470
10-405996-0	0	0-2	Yellow	.440	.605	1.000

Millimeters		
A Dia. ± 0.2	B ± 0.1	C ± 0.2
2.1	3.4	14.3***
3.1	4.3	14.3***
4.7	8.0	11.9
7.9	10.5	11.9
11.2	15.4	25.4

** ± .020 (in.) *** ± 0.5 (mm)

GT Connectors
crimp contacts and application tools

Machined from copper alloys and silver or gold plated for maximum corrosion resistance, with a minimum millivolt drop and a maximum current carrying capacity, the size 16 and 12 socket contacts are of the closed entry design. Crimp contacts are available for all MS insert arrangements and are identified with an Amphenol® proprietary number.

CRIMP CONTACTS

CRIMP CONTACT DATA						APPLICATION TOOLS		
PART NUMBER				MATING SIZE	WIRE WELL	Crimp Tools	Positioner/ Die Set	Locator/ Color
PIN CONTACT		SOCKET CONTACT						
SILVER	GOLD("D")	SILVER	GOLD("D")					
10-40553	10-597160-15D	10-597109-161	10-597109-16D	16S	16-18-20	Daniels AF8 or Equivalent	TH29-1 or Equivalent	Red
10-606014-40	10-597160-40D	10-597109-401	10-597109-40D		12-14			
10-606014-221	10-597160-19D	10-597109-191	10-597109-19D		14-16			
10-606014-291	10-597160-34D	10-597109-341	10-597109-34D		20-22			
10-606014-46	10-597160-46D	10-597109-461	10-597109-46D		20-24			
10-40557	10-597160-16D	10-597109-171	10-597109-17D	16	16-18-20			Pin - Blue Socket - Green
10-606014-022	10-597160-22D	10-597109-221	10-597109-22D		12-14			
10-606014-171	10-597160-17D	10-597109-141	10-597109-14D		14-16			
10-606014-311	10-597160-33D	10-597109-331	10-597109-33D		20-22			
10-606014-361	10-597160-36D	10-597109-361	10-597109-36D		20-24			
10-606014-121	10-597160-12D	10-597109-131	10-597109-13D	12	12-14			Green
10-606014-231	10-597160-23D	10-597109-231	10-597109-23D		8-10			
10-606014-251	10-597160-26D	10-597109-261	10-597109-26D		10-12			
10-606014-271	10-597160-27D	10-597109-271	10-597109-27D		14-16-18			
10-606014-261	10-597160-24D	10-597109-241	10-597109-24D		18-20			
10-606014-201	10-597160-20D	10-597109-201	10-597109-20D		20-22			
10-40792	10-597160-8D	10-40793	10-597109-8D	8	8	Pico 400BHD	Pico 414DA-8N	Pico Pin - 4025 Socket - 4026
10-606014-41	10-597160-41D	10-597109-411	10-597109-41D		6			
10-606014-321	10-597160-28D	10-606015-321	10-597109-28D		10-12			
10-606014-381	10-597160-38D	10-597109-381	10-597109-38D		12-14			
10-40564	10-597160-4D	10-40565	10-597109-4D	4	4		Pico 414DA-4N	Pico 4043
10-606014-58	10-597160-58D	10-597109-581	10-597109-58D		6			
10-606014-331	10-597160-35D	10-597109-351	10-597109-35D		8			
10-606014-44	10-597160-44D	10-606015-441	10-597109-44D		10			
10-581806-000	10-597160-1D	10-581808-000	10-597159-1D	0	0		Pico 414DA-0N	Pico Pin - 4042-1 Socket - 4042
10-606014-341	10-597160-29D	10-597109-291	10-597109-29D		0-2			
10-606014-351	10-597160-30D	10-606015-351	10-597109-30D		4			
10-597276-48	10-597276-48D	10-606015-48	10-597109-48D	2/0	2/0	Pico 500	Pico 514DA2/0N	Pico Pin - 6490
10-597276-47	10-597276-47D	10-606015-47	10-597109-47D	4/0	4/0		Pico 514DA4/0N	Socket - 6491

See page 87 for further contact information applicable to both crimp and solder contacts.
Additional contact variations including thermocouple and RADSOK power contacts are available; consult Amphenol, Sidney, NY for information.

GT Connectors
solder contacts

Machined copper alloy contacts in a full range of sizes, with closed entry socket design in the size 12 and 16 contacts. A heavy silver-plated finish is deposited on all MS style solder contacts for maximum corrosion resistance, maximum current carrying capacity and low millivolt drop. Gold plated contacts are also available. (See how to order, pg. 88).

Pin/ Socket	Mating End Size	Wire Barrel Size	Allowable Wire Size	Test Current** Amps
Pin Socket	16 Short†	16	16 18 20 22	13 10 7.5 5
Pin Socket	16 Long	16	16 18 20 22	13 10 7.5 5
Pin Socket	12	12	12 14	23 17
Pin Socket	8	8	8 10	46 33
Pin Socket	4	4	4 6	80 60
Pin Socket	0	0	0 1 2	150 125 100

** Contact ratings as stated are test ratings only. The connector may not withstand full rated current through all contacts continuously. Please note that the electrical data given is not an establishment of electrical safety factors. This is left entirely in the designer's hands as he can best determine which peak voltage, switching surges, transients, etc. can be expected in a particular circuit.

† The 10SL, 14S and 16S connectors require short contacts.

Table I
MIL-SPEC CONTACT ARRANGEMENT SERVICE RATING

MS Service Rating	Recommended Operating Voltage* at Sea Level		Effective Creepage Distance Nom.	Mechanical Spacing Nom.
	DC	AC (RMS)		
Inst.	250	200	1/16	
A	700	500	1/8	1/16
D	1250	900	3/16	1/8
E	1750	1250	1/4	3/16
B	2450	1750	5/16	1/4
C	4200	3000	1	5/16

* The values listed in Table I represent operating values which include a generous safety factor. It may be necessary for some applications to exceed the operating voltages listed here. If this is necessary, designers will find Table II useful for determining the degree to which the recommended values of Table I can be exceeded.

Table II
ALTITUDE VOLTAGE DERATING** CHART

MS Service Rating	Nominal Distance		Standard Sea Level Conditions		Pressure Altitude † 50,000 Feet		Pressure Altitude † 70,000 Feet	
	Airspace	Creepage	Minimum Flashover Voltage AC (RMS)	Test Voltage AC (RMS)	Minimum Flashover Voltage AC (RMS)	Test Voltage AC (RMS)	Minimum Flashover Voltage AC (RMS)	Test Voltage AC (RMS)
Inst.	1/32	1/16	1400	1000	550	400	325	260
A	1/16	1/8	2800	2000	800	600	450	360
D	1/8	3/16	3600	2800	900	675	500	400
E	3/16	1/4	4500	3500	1000	750	550	440
B	1/4	5/16	5700	4500	1100	825	600	480
C	5/16	1	8500	7000	1300	975	700	560

† Not corrected for changes in density due to variations in temperature

** No attempt has been made to recommend operating voltages. The designer must determine his own operating voltage by the application of a safety factor to the above derating chart to compensate for circuit transients, surges, etc.

Amphenol® GT Connectors
how to order, connector intermateability

Part Number System

GT	C	00	A	FF	36-5	P	W	(014)
	1	2	3	4	5	6	7	8

1. Contact Style and Insert Material

C = Crimp
CN = Crimp with stainless steel
S = Solder
SN = Solder with stainless steel
CY = Crimp with Viton
SY = Solder with Viton
CL = Crimp with low smoke/flame retardant inserts
SL = Solder with low smoke/flame retardant inserts
No designation required for Neoprene components

2. Shell Style

00 - Wall mount receptacle
01 - Inline receptacle
02 - Box mount receptacle
020 - Box mount receptacle with accessory threads
030 - Square flange receptacle - rear panel mount
05 - Dummy receptacle
06 - Straight plug
062 - Straight plug with deep serrated coupling nut*
064 - Panel mounted plug with heavy duty coupling nut
065 - Straight plug with long heavy duty coupling nut
07 - Jam nut receptacle - rear panel mount
070 - Jam nut receptacle with accessory threads
08 - 90° angle plug
TB - Thru-bulkhead

3. Connector Class - For details, see pages 29-78

A - Adapter for accessory attachment, non-environmental
AF - Adapter, clamp for individual wires, non-environmental
CF - Adapter, jacketed cable clamp, environmental
CFGG - Adapter, jacketed cable clamp, over molded coupling nut, environmental
CFZ - Adapter, jacketed cable clamp, individual wire sealing grommet, environmental
F - Adapter, clamp for individual wires, individual wire sealing grommet, environmental.
G - Adapter for heat shrink tubing, individual wire sealing grommet, environmental
G2 - Free turning adapter for heat shrink tubing, individual wire sealing grommet, environmental
GTTB - Thru bulkhead receptacle, accepts mating plug on both sides
LC - Long adapter, backshell with jacketed cable basket weave grip, with individual wire sealing grommet, environmental
LCF - Long adapter, jacketed cable clamp, environmental
LCFZ - Long adapter, jacketed cable clamp, individual wire sealing grommet, environmental
LT - Adapter, backshell for terminating metallic core conduit
PFC - Adapter, backshell for plastic corrugated conduit, individual wire sealing grommet, environmental
PG - Long adapter with PG threads, individual wire sealing grommet, environmental
PP - Panel mounted plug
R - Adapter for accessory attachment, individual wire sealing grommet, environmental
R - (02/03) No thread, no accessories, environmental with panel sealing gasket
R - (020) No accessories, environmental with panel sealing gasket
RFS - (02) No accessories, countersunk mounting holes for use with over molded coupling nut, environmental with panel sealing gasket
RFSM - (020) No accessories, countersunk mounting holes for use with over molded coupling nut, environmental with panel sealing gasket
RV - Adapter, individual wire sealing grommet, environmental
SB - Adapter for termination of EMI/RFI shielded braid with heat shrink tubing or boot, individual wire sealing grommet, environmental
SBT - Adapter for termination of EMI/RFI shielded braid with heat shrink tubing or boot, individual wire sealing grommet, environmental
SL - Long adapter, jacketed cable liquid tight strain relief, environmental

4. Designation for Mounting Hole - Receptacle Only

FF - UN Threads
FM - Metric Threads
No designation for standard through hole mounting holes.

5. Shell Size and Arrangement

See pages 2–4

6. Contact Style

P designates pin contacts
S designates socket contacts

7. Alternate Position

W, X, Y and Z - See page 5.
No suffix required for normal position.

8. Connector Modification*

Omit for standard olive drab with silver plated contacts
i.e.: (014) Olive drab cadmium plate, nickel base
(B30) gold/nickel plated contacts
(025) Black zinc cobalt
(027) Conductive black zinc cobalt
(024) Green zinc cobalt
(LC) Less contacts

* Consult Amphenol, Sidney, NY

MATEABILITY WITH IDENTICAL CONTACT ARRANGEMENTS

Connector Style	Mateable with Style
GT00	GT06 / 062 / 064 / 065 / 08
GT01	GT06 / 062 / 064 / 065 / 08
GT02	GT06 / 062 / 064 / 065 / 08
GT020	GT06 / 062 / 064 / 065 / 08
GT030	GT06 / 062 / 064 / 065 / 08
GT06 / 062 / 064 / 065	GT00 / 01 / 02 / 020 / 03 / 030 / 05 / 070 / TB
GT07 / 070	GT06 / 062 / 064 / 065 / 08
GT08	GT00 / 01 / 02 / 020 / 03 / 030 / 05 / 070 / TB
GTTB	GT06 / 062 / 064 / 065 / 08

Amphenol® GT Connectors
with RADSOK technology

Amphenol offers Amphe-Power Connectors, high amperage capability connectors designed for the most demanding industrial and transportation applications. The GT connectors, in most shell styles, can be enhanced with RADSOK contacts that handle up to 150% higher amperages than standard contacts.

The RADSOK contact is a hyperbolic, stamped grid configuration within the socket. As male pin is inserted, axial members in the female half deflect, imparting high current flow across the connection with minimal voltage loss. This design ensures a large, coaxial, face-to-face surface area engagement and provides higher current capacity with minimized temperature rise. The RADSOK's strongest benefit is its very low mill-volt drop because of the intimate contact provided by the spring force of the grid. RADSOK contacts are available in size 8 (69 amps), size 4 (120 amps), and size 0 (250 amps). Current Amphe-Power lines support from 50A to 500A continuous duty. Hybrid arrangements with RADSOK and power contacts can be tailored to meet customer needs.

For more information on GT Amphe-Power Connectors, request Brochure SL-391.

The RADSOK Contact Advantage:

- Low contact Resistance
- Low milli-volt drop performance
- Higher current capacity with minimized temperature rise.
- Reliability under vibration and shock.
- High quality, consistency and lower cost

Amphe-Power™ Amphe-GTR

The Amphe-Power™ GT series provides the benefit of a GT connector in a high performance composite material. The GT-R is listed to UL/CUL 2238 Standard, Control Number 19VP. It also meets all of the specifications for high power process control and server applications. Performance level is the same as that of the GT series. RADSOK contacts enable an increased current rating of 120A on individual contacts, and a standard PG thread achieves an IP67 seal rating.

Compression (setscrew) wire termination to the 4/6AWG or 8/10AWG conductors allows for easy field replacement of pin or socket contacts. It also provides for easy complete plug or receptacle assemblies, all without a need for specialized tooling.

Power GT

The Power GT is a modification to the GT series incorporating three 8.0mm RADSOK contacts mounted in a common termination to busbar or cable, enhanced to an ultra-high current density in a compact shell size 28 layout. This design created the first TUV "finger-proof" 500A connector in the marketplace with the "dead-front" pin design to prevent contact with live circuits. In environmental versions, this connector achieves IP67 performance.

The ninety-degree wire orientation on the plug provides low-profile mounting for tight packaging requirements. This plug is designed to be over-molded, and can also be fitted with mechanical hardware for individual requirements.

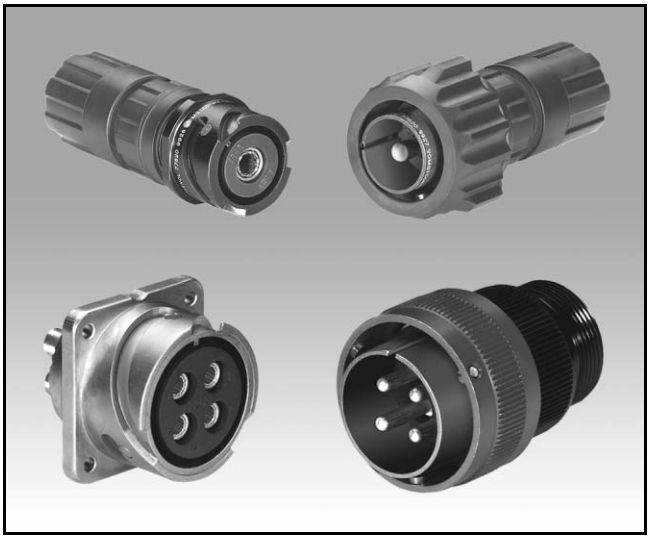

Amphenol ®GT Amphe-Power Connectors with RADSOK ® high amperage contacts

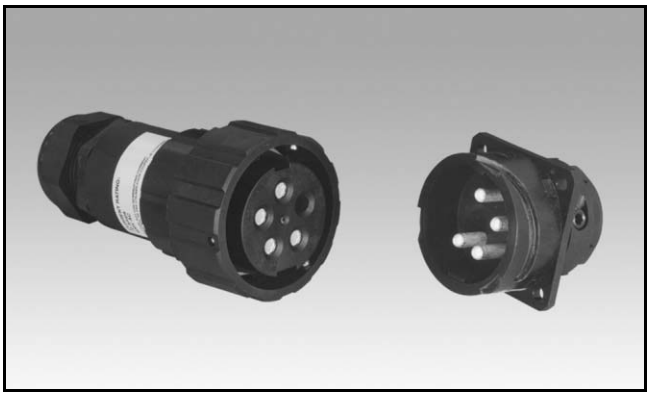

Amphe-Power Composite GTR Connector

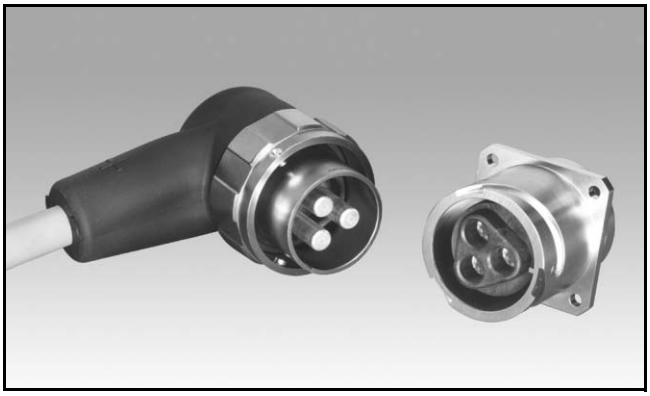

Power GT, Finger-Proof 500A Connector

Amphenol® GT Connectors
special applications

GTC-M Series - The GT with Metal Clip Inserts

Amphenol's GTC-M series combines the GT reverse bayonet connector and the rear release metal clip retention system which is used in the Amphenol®/Matrix® MIL-C-5015 connector line. Another benefit is the captivated coupling nut assembly which allows unmating without the rear accessories attached.

Improved environmental sealing is achieved with this series. The crimp joint is covered by a three-webbed fluorinated silicone grommet that seals on the wires without the necessity of an additional sealing clamp. An interfacial seal with conical towers on the pin insert matches with recesses on the socket; a match that provides the popular "cork and bottle" seal during mating. The grommet and the interfacial seal provides adequate sealing during environmental extremes. The GTC-M series is intermateable and intermountable with the standard GT series, and it uses standard M85049 style rear accessories. For more information on the GTC-M Series, request Product Data Sheet #181.

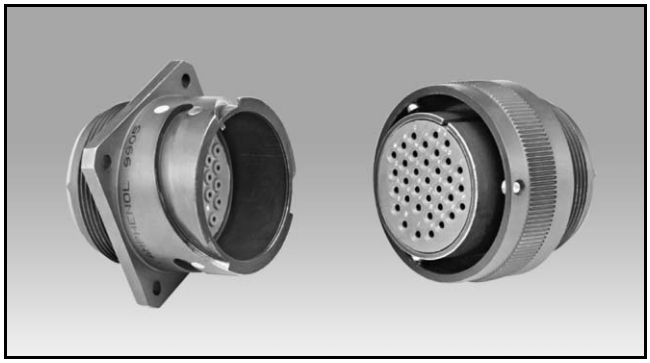

Amphenol ® GTC-M with Metal Clip Inserts

GT-PC Connectors for High Voltage Power Applications

The Amphenol® GT-PC connectors were developed for use in the High Voltage Power Distribution industry. Incorporating all the standard features of the popular GT series, these connectors will prevent accidental electrical shocks to the technicians. "Dead Front" pin contacts in size 0 are recessed into a socket insert, preventing inadvertent contact with a live circuit. Higher amperage levels are provided - up to 100 amps per contact. The GT-PC series has been UL approved. "First Mate - Last Break" features on one or more of the pins provide an additional measure of operator safety. Currently there are 5 insert patterns available. Consult Amphenol Industrial Operations for more information.

Amphenol ® GT-PC Connectors for High Voltage Power Applications

GT Connectors for the HMI Lighting Industry

Amphenol provides GT connectors for the rugged use experienced during stage shows and other entertainment events, even outside in the elements. The same 3-point bayonet coupling system and the same ruggedness to survive 2000 mating cycles are provided. The unique features of this connector series include color-coded receptacle shells with matching backshells on the cable plugs. The colors can be matched to specific wattage cables and/or light systems. A wide selection of environmental adapters designed to seal on the outside diameter of specific cable diameters can be fitted to the backshells. Applications for these connectors include power and control of lighting trusses, and portable power and dimmer racks. For more information request Product Data Sheet #174.

Amphenol ® GT Connectors for the HMI Lighting Industry

Additional Amphenol Industrial Connectors for the Rail Industry

ARCL Series

Amphenol has developed a heavy duty 5015 type connector with 38999 Series III type coupling for use in mass transportation and heavy equipment applications. The ARCL Series has the same electrical characteristics as 5015 standard product but it has rugged ratchet double start stub threads. These rugged double stub threads eliminate mis-mating and provide for easy cleaning.

Other features/benefits of the ARCL connector series:

- 5 key/keyway alignment feature.
- Operating temperature is from –55°C to +125°C. Operating voltage is to 3000 VAC (RMS) at sea level.
- Crimp and solder termination available.
- 5 shell styles with all the 5015 insert patterns available.
- Supplied with low smoke, low halogen inserts which are flame retardant, but also can be supplied with standard 5015 inserts.
- Wide variety of backend accessories for all styles of cable and conduit, and a variety of cable strain reliefs including over-molding and heat shrink boots.
- RADSOK high amperage sockets can be incorporated.

Star-Line® Series

Amphenol/Pyle Star-Line Series is another heavy duty environmental cylindrical connector widely used in mass transportation and in the oil exploration market. Ideal for high amperage and high density control and instrumentation applications, this series has features and benefits as follows;

- Hard anodic coating for dielectric strength with heat and corrosion resistance.
- Operating temperature is from –67°F to +257°F. Amperages up to 1135 amps at 1000VAC or DC rating available.
- Double lead Acme threads provide complete coupling in one turn of the coupling nut, and do not clog under adverse weather conditions.
- Solder, crimp and pressure terminals; circuit breaking power and control types available.
- UL listed and CSA listed for circuit breaking capability.
- 5 shell styles with over 150 insert patterns.
- 3 retention styles with captive contacts or insertable/removable contacts.
- Variety of backend accessories including basketweave cable grips, straight or angled adapters and receptacles mounted to junction boxes.

Over-Molded Cable

Cables can be designed with custom overmold to Amphenol Industrial cylindrical connectors for almost any application in mass transportation or any other types of industrial markets. Overmold seals to the rear of the connector and to the cable jacket to provide moisture sealing. Cables may be designed to meet any environmental performance requirement and any electrical performance requirement. Variety of materials are available: neoprene, hypalon and others.

Consult Amphenol Industrial Operations for further information on these industrial products.

Amphenol ® ARCL Series

Amphenol® Star-Line® Series

Over-Molded Cable for Industrial Connectors

Additional Amphenol Industrial Products
for the Rail Industry, cont.

Trans-Power® Connectors

Amphenol/Pyle provides head-end power connectors for commercial rail systems. These meet Amtrak specification D-77-24, APTA #RP-E-016. Features and benefits include:

- Slip-fit, double seated for environmental protection.
- Retention by receptacle cover or optional accessories.
- Crimp termination per Amtrak and APTA specifications.
- Socket contacts provide uniform pressure for low mating and unmating forces, low voltage drop, consistently low temperature rise and shock resistance.
- Operating ambient temperature is –57°F to +110°F. Electrical performance up to 600 volts, 400 Amps.
- All molded elastomeric rubber body on jumper. Raintight per U/L standard.

Amphenol ® Trans-Power® Connectors for Rail Mass Transit

27 Pole Train-line Receptacles and Jumpers

Amphenol/Pyle 27 pole MU (multiple unit) and communication receptacles and jumpers are provided for rail applications. Jumpers are either standard car to car, between locomotives or between locomotives and lead cars. These products are designed to Amtrak and APTA specifications. Other design features and benefits:

- Locomotive jumpers are keyed differently from all other 27 pole jumpers to prevent mis-mating. They also have identification markings to distinquish their proper usage on locomotives.
- Receptacles are a rugged aluminum housing with a spring loaded cover. Receptacles can be provided with or without leads.
- Push-pull mating.

Amphenol® 27 Pole Train-line Receptacle and Jumpers for Rail Mass Transit

Amphe-Y Composite Molded Connectors

The Amphe-Y is a new Amphenol product for mass transit application that uses RADSOK high amperage sockets. It is a molded interconnect system that provides rapid and safe connect and disconnect for traction motor installation and repair.

This packaging solution consists of a molded base plate, a silver-plated copper “connector” with RADSOK contacts, and a molded top cover. When attached to the traction motor, this unit creates a safe, reliable and efficient means of conducting high amperage current from the third rail or catenary to the propulsion controller. Each “leg” of this assembly can safely accommodate up to 1000 amps through the 18mm RADSOK contacts.

Amphenol has wide capabilities in designing specialty molded interconnect solutions, such as the new Amphe-Y, for power and/or harsh environment applications. Custom designs can include bayonet, theaded or push-pull coupling with crimp solder or pressure termination. They can utilize RADSOK or standard contacts and can be designed to meet specific environmental sealing requirements and temperature ratings.

Amphe-Y Molded Interconnect System for Rail Mass Transit

Consult Amphenol Industrial Operations for further information on these industrial products.

AMPHENOL CORPORATION
Amphenol Industrial Operations
40-60 Delaware Avenue
Sidney, New York 13838-1395
Phone: 800-678-0141 or 607-563-5011
www.amphenol-industrial.com

Общество с ограниченной ответственностью «МосЧип» ИНН 7719860671 / КПП 771901001
Адрес: 105318, г.Москва, ул.Щербаковская д.3, офис 1107

Данный компонент на территории Российской Федерации

Вы можете приобрести в компании MosChip.

Для оперативного оформления запроса Вам необходимо перейти по данной ссылке:

http://moschip.ru/get-element

Вы можете разместить у нас заказ для любого Вашего проекта, будь то серийное производство или разработка единичного прибора.

В нашем ассортименте представлены ведущие мировые производители активных и пассивных электронных компонентов.

Нашей специализацией является поставка электронной компонентной базы двойного назначения, продукции таких производителей как XILINX, Intel (ex.ALTERA), Vicor, Microchip, Texas Instruments, Analog Devices, Mini-Circuits, Amphenol, Glenair.

Сотрудничество с глобальными дистрибьюторами электронных компонентов, предоставляет возможность заказывать и получать с международных складов практически любой перечень компонентов в оптимальные для Вас сроки.

На всех этапах разработки и производства наши партнеры могут получить квалифицированную поддержку опытных инженеров.

Система менеджмента качества компании отвечает требованиям в соответствии с ГОСТ Р ИСО 9001, ГОСТ РВ 0015-002 и ЭС РД 009

Офис по работе с юридическими лицами:

105318, г.Москва, ул.Щербаковская д.3, офис 1107, 1118, ДЦ «Щербаковский»

Телефон: +7 495 668-12-70 (многоканальный)

Факс: +7 495 668-12-70 (доб.304)

E-mail: info@moschip.ru

Skype отдела продаж:
moschip.ru
moschip.ru_4
moschip.ru_6
moschip.ru_9