FineAdjust Applicator
Applicator Tooling Specification Sheet
Order No. 63901-6100

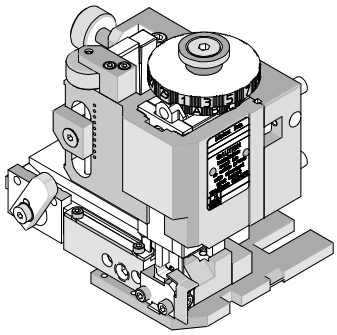

FEATURES

- Quick punch removal with the push of a button for fast and easy tooling change
- Applicator designed to industry standard mounting and shut height 135.80mm (5.346")
- Quick set-up time; plus the crimp height, track and feed adjustments can be set without removing the applicator from the press
- Fine adjustment allows users to achieve target with little effort by adjusting in increments of .015mm (.0006") for conductor crimp height and .063mm (.0025") for insulation height
- Independent adjustment rings allow users to quickly adjust the conductor or insulation crimp height without affecting each other
- Directly adapts to most automatic wire processing machines

SCOPE

Products: GET 0.64 mm (Global Electronic Technology) Connector System Socket Terminal, 0.50 - 0.75mm² and 18-20 AWG.

Terminal Series No.	Terminal Order No.	Wire Size		Insulation Diameter				Strip Length	
				IPC/WHMA-A620		Terminal			
		AWG	mm²	mm	In.	mm	In.	mm	In.
13933	1393366-2	Metric Only	0.50	1.60	.063	1.60	.063	4.40	.073
98853	98853-0014	Metric Only	0.50	1.60	.063	1.60	.063	4.40	.073
To achieve optimum IPC-A620 insulation crimps, use this insulation OD range. Overall insulation OD specification for terminal									

DEFINITION OF TERMS

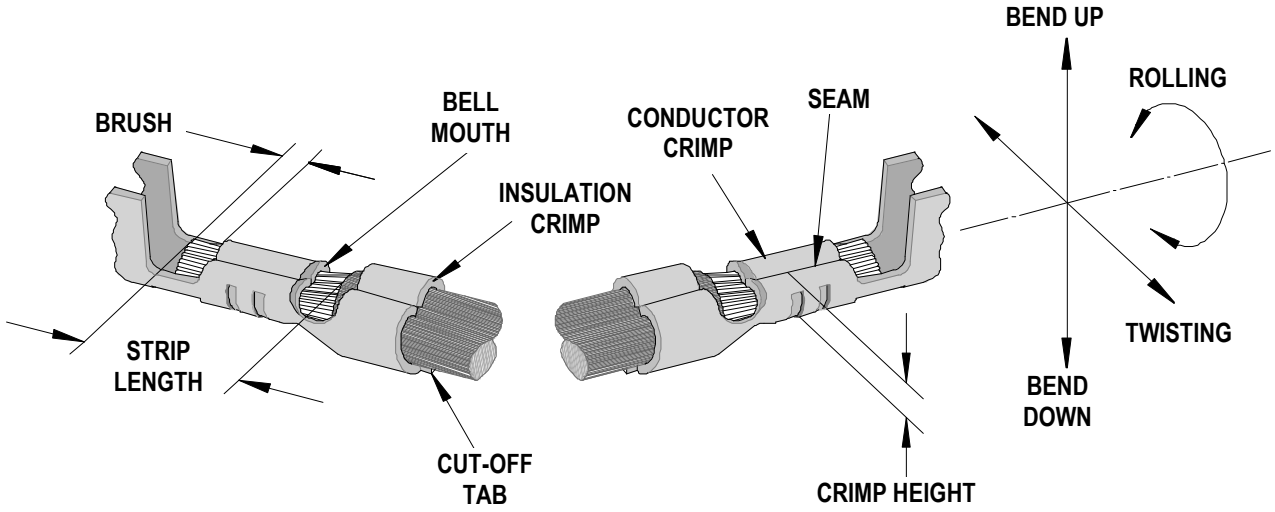

The above terminal drawing is a generic terminal representation. It is not an image of a terminal listed in the scope.

CRIMP SPECIFICATION

Terminal Series No.	Bell mouth		Cut-off Tab Maximum		✷Conductor Brush	
	mm	In.	mm	In.	mm	In.
13933	0.20	.008	0.50	.020	0.00-1.00	.000-.040
98853	0.20	.008	0.50	.020	0.00-1.00	.000-.040
✷ Wire brush must be flush or below top of Conductor Crimp.						

Terminal Series No.	Bend up	Bend down	Twist	Roll	Punch Width (Ref)				Seam
					Conductor		Insulation		
	Degree		Degree		mm	In	mm	In	
13933	2.5	2.5	1.6	1.6	1.78	.070	2.05	.081	Seam shall not be open and no wire allowed out of the crimping area
98853	2.5	2.5	1.6	1.6	1.78	.070	2.05	.081	

After crimping, the crimp profiles should measure the following:

Terminal Series No.	Wire Size		Conductor				Insulation Maximum				Pull Force Minimum	
			Crimp Height		Crimp Width		Crimp Height		Crimp Width (Ref.)			
	AWG	mm^2	mm	In.	mm	In.	mm	In.	mm	In.	N	Lb.
13933	Metric Only	0.50	0.98-1.06	.040-.042	1.78-1.93	.070-.076	2.10	.083	2.05	.081	75.0	16.86
98853	Metric Only	0.50	0.98-1.06	.040-.042	1.78-1.93	.070-.076	2.10	.083	2.05	.081	75.0	16.86

- Tool Qualification Notes:

1. Pull Force should be measured with no influence from the insulation crimp.
2. The above specifications are guidelines to an optimum crimp.

PARTS LIST

FineAdjust Applicator 63901-6100				
Item	**Order No**	**Engineering No.**	**Description**	**Quantity**
Perishable Tooling				
	63901-6170	63901-6170	Tool Kit (All "Y" Items)	REF
1	63901-6101	63901-6101	Conductor Punch	1 Y
2	63901-6102	63901-6102	Conductor Anvil	1 Y
3	63901-6103	63901-6103	Insulation Punch	1 Y
4	63901-6104	63901-6104	Insulation Anvil	1 Y
5	63901-6105	63901-6105	Cut-Off Plunger	1 Y
6	63901-6106	63901-6106	Front Plunger Retainer	1 Y
Other Components				
7	11-18-4094	60709A111	Feed Guide	1
8	63443-0021	63443-0021	Key	1
9	63443-0061	63443-0061	Wire stop	1
10	63443-6009	63443-6009	Rear Cover	1
11	63600-3351	63600-3351	Compression Spring	1
12	63700-0539	63700-0539	Cut-off Plunger Spring	1
13	63867-3007	63867-3007	Bottom Cap	1
14	63901-6107	63901-6107	Anvil Mount	1
15	63901-6108	63901-6108	Wire Hold Down	1
16	63901-6109	63901-6109	Front Plunger Striker	1
Frame				
17	63800-4901	63800-4901	Top	1
18	63801-3281	63801-3281	Base	1
19	63801-4650	63801-4650	Track	1
Hardware				
20	N/A	N/A	M3 by 6 Long SHCS	2**
21	N/A	N/A	M4 by 8 Long Set Screw	1**
22	N/A	N/A	M4 by 10 Long SHCS	2**
23	N/A	N/A	M4 by 12 Long BHCS	2**
24	N/A	N/A	M4 by 16 Long SHCS	1**
25	N/A	N/A	M4 by 50 Long SHCS	2**
26	N/A	N/A	M5 by 12 Long SHCS	1**
27	N/A	N/A	2mm by 8 Long Roll Pin	1**
28	N/A	N/A	3mm by 6 Long Roll Pin	1**
29	N/A	N/A	#10-32 by 1/4"Long BHCS	1**
** Available from an industrial supply company such as MSC (1-800-645-7270).				

Assembly Drawing

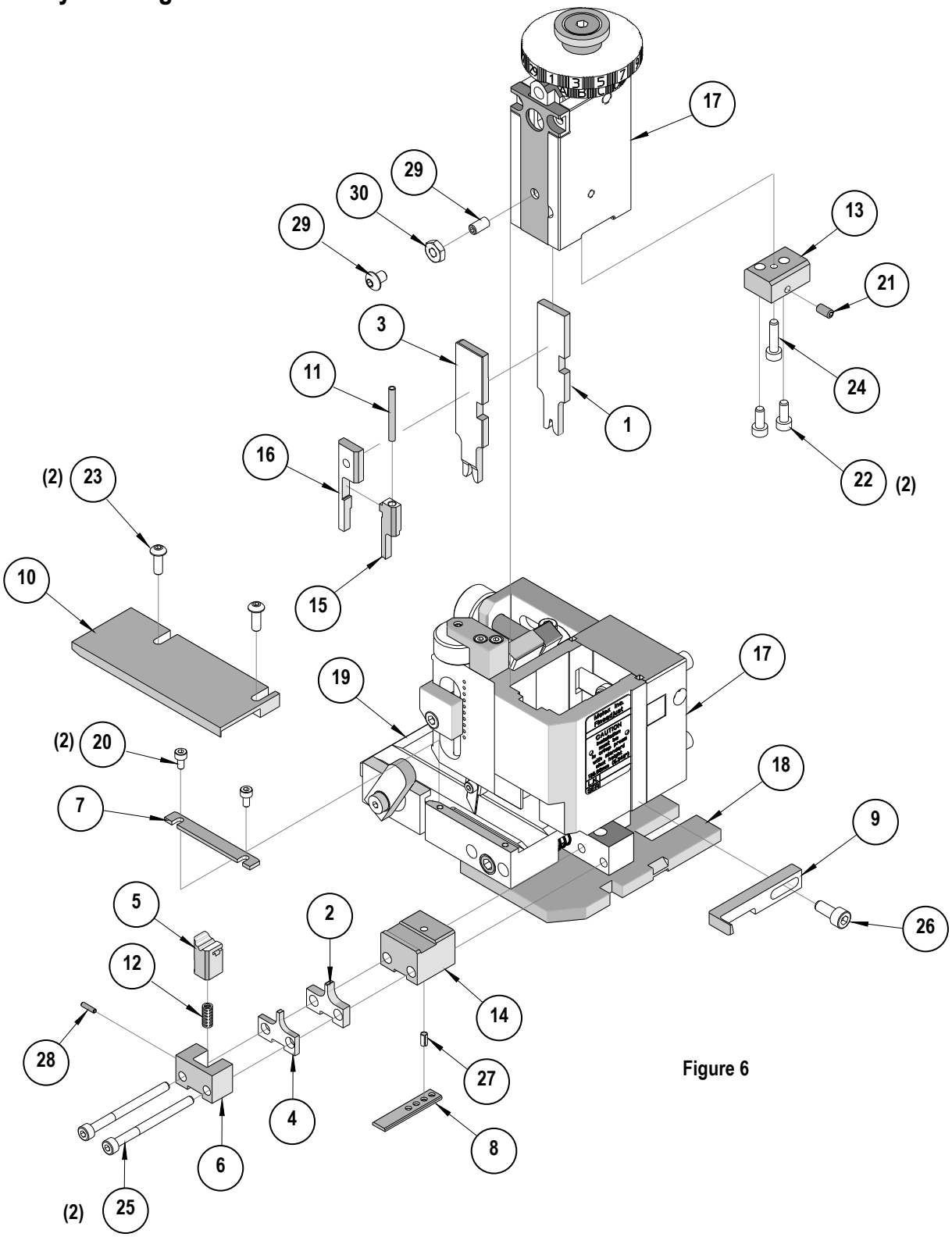

Figure 6

NOTES

1. Molex recommends an extra perishable tooling kit be maintained at your facility.
2. Verify tooling alignment by manually cycling the press and Applicator before crimping under power. Check that all screws are tight.
3. Slugs, Terminals, Dirt and Oil should be kept clear of work area.
4. Wear safety glasses at all times.
5. For recommended maintenance refer to the FineAdjust Manual.

CAUTION: This applicator should only be used in a press with a shut height of 135.80 mm (5.346”). Tooling damage could result at a lower setting.

CAUTION: To prevent injury never operate this Applicator without the guards supplied with the press or wire-processing machine in place. Reference the press or wire processing manufacturer’s instruction manual.

CAUTION: Molex crimp specifications are valid only when used with Molex terminals, applicators and tooling.

Americas Headquarters
Lisle, Illinois 60532 U.S.A.
1-800-78MOLEX
amerinfo@molex.com

Far East North Headquarters
Yamato, Kanagawa, Japan
81-462-65-2324
feninfo@molex.com

Far East South Headquarters
Jurong, Singapore
65-6-268-6868
fesinfo@molex.com

European Headquarters
Munich, Germany
49-89-413092-0
eurinfo@molex.com

Corporate Headquarters
2222 Wellington Ct.
Lisle, IL 60532 U.S.A.
630-969-4550
Fax: 630-969-1352

Visit our Web site at http://www.molex.com

Общество с ограниченной ответственностью «МосЧип» ИНН 7719860671 / КПП 771901001
Адрес: 105318, г.Москва, ул.Щербаковская д.3, офис 1107

Данный компонент на территории Российской Федерации

Вы можете приобрести в компании MosChip.

Для оперативного оформления запроса Вам необходимо перейти по данной ссылке:

http://moschip.ru/get-element

Вы можете разместить у нас заказ для любого Вашего проекта, будь то серийное производство или разработка единичного прибора.

В нашем ассортименте представлены ведущие мировые производители активных и пассивных электронных компонентов.

Нашей специализацией является поставка электронной компонентной базы двойного назначения, продукции таких производителей как XILINX, Intel (ex.ALTERA), Vicor, Microchip, Texas Instruments, Analog Devices, Mini-Circuits, Amphenol, Glenair.

Сотрудничество с глобальными дистрибьюторами электронных компонентов, предоставляет возможность заказывать и получать с международных складов практически любой перечень компонентов в оптимальные для Вас сроки.

На всех этапах разработки и производства наши партнеры могут получить квалифицированную поддержку опытных инженеров.

Система менеджмента качества компании отвечает требованиям в соответствии с ГОСТ Р ИСО 9001, ГОСТ РВ 0015-002 и ЭС РД 009

Офис по работе с юридическими лицами:

105318, г.Москва, ул.Щербаковская д.3, офис 1107, 1118, ДЦ «Щербаковский»

Телефон: +7 495 668-12-70 (многоканальный)

Факс: +7 495 668-12-70 (доб.304)

E-mail: info@moschip.ru

Skype отдела продаж:
moschip.ru
moschip.ru_4
moschip.ru_6
moschip.ru_9