Microsemi
SCOTTSDALE DIVISION

1N2970 thru 1N3015B and 1N3993 thru 1N4000A

10 WATT ZENER DIODES

DESCRIPTION

These high power 10 W Zener diodes represented by the JEDEC registered 1N2970 thru 1N3015B and 1N3993 thru 1N4000A series provide voltage regulation in a selection over a 3.9 V to 200 V broad range of voltages. They may be operated up to 10 W with adequate mounting and heat sinking with their low thermal resistance. These Zeners are also available in JAN, JANTX, JANTXV military qualifications. Microsemi also offers numerous other Zener products to meet higher and lower power applications.

APPEARANCE

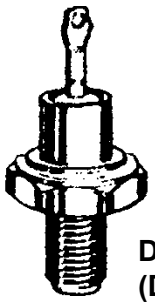

DO-4
(DO-203AA)

IMPORTANT: For the most current data, consult *MICROSEMI's* website: http://www.microsemi.com

FEATURES

- JEDEC registered 1N2970 thru 1N3015B and 1N3993 thru 1N4000A
- Internal solder bond construction
- Hermetically sealed (welded)
- Zener Voltage 3.9V to 200V.
- Also available in JAN, JANTX, and JANTXV qualifications per MIL-PRF-19500/124 by adding the JAN, JANTX, or JANTXV prefixes to part numbers for desired level of screening; (e.g. JANTX1N2970B, JANTXV1N3996A, etc.
- Standard polarity is anode to case (stud) for 1N2970 thru 1N3015B and cathode to case for 1N3993 thru 1N4000A
- Reverse polarity is cathode to case for 1N2970 thru 1N3015B and anode to case for 1N3993 thru 1N4000A by designating R suffix, e.g. 1N2970RB, 1N3993RA, etc.
- Consult factory for surface mount equivalents

APPLICATIONS / BENEFITS

- Regulates voltage over a broad operating current and temperature range
- Standard voltage tolerances are +/- 5% with B suffix, +/-10% with an A suffix, and +/-20% with no suffix
- Consult factory for +/-2% or +/-1% voltage tolerance with a C or D suffix respectively
- Reverse polarity available
- Nonsensitive to ESD per MIL-STD-750 Method 1020
- Inherently radiation hard as described in Microsemi MicroNote 050

MAXIMUM RATINGS

- Junction Temperatures: -65°C to +175°C
- Storage Temperatures: -65°C to +200°C
- DC Power Dissipation: 10 Watts
- Power Derating: 80 mW/°C above 50°C
- Forward Voltage @ 2.0 A: 1.5 Volts
- THERMAL RESISTANCE: 10°C/W (typical) junction to case (stud)
- Solder temperatures: 260 °C for 10 s (max)

MECHANICAL AND PACKAGING

- CASE: Industry Standard DO-4, (DO-203AA), 7/16" Hex, stud with 10-32 threads, welded, hermetically sealed metal and glass
- FINISH: All external surfaces are corrosion resistant and terminal solderable
- POLARITY: **1N3993 – 1N4000**: Std. Polarity is cathode to stud. Reverse polarity (anode to stud) indicated by suffix "R"
  1N2970 – 1N3015: Std. Polarity is anode to stud. Reverse polarity indicated by suffix "R"
- WEIGHT: 7.5 grams
- MOUNTING HARDWARE: Consult factory for optional insulator, bushing solder terminal, washers, and nut
- See package dimension on last page

Copyright © 2003

Microsemi
Scottsdale Division
8700 E. Thomas Rd. PO Box 1390, Scottsdale, AZ 85252 USA, (480) 941-6300, Fax: (480) 947-1503

ELECTRICAL CHARACTERISTICS @ 30°C Case Temperature

JEDEC TYPE NO. (Note 1)	NOMINAL ZENER VOLTAGE V_Z @ I_{ZT} (Note 2) Volts	ZENER TEST CURRENT (I_{ZT}) mA	MAX. DYNAMIC IMPEDANCE (Note 3) Z_{ZT} @ I_{ZT} OHMS	Z_{ZK} @ 1mA (I_{ZK}) OHMS	MAX. DC ZENER CURRENT (I_{ZM}) @ 75°C Stud Temp. (Note 4) mA	TYPICAL TEMP. COEFF. α_{VZ} %/°C	MAX** REVERSE CURRENT I_R @ V_R µA	Volts	POLARITY
†1N3993A	3.9	640	2.0	400	2380	-.046	100	0.5	STD. POLARITY CATHODE TO STUD
†1N3994A	4.3	580	1.5	400	2130	-.033	100	0.5	
†1N3995A	4.7	530	1.2	500	1940	-.015	50	1.0	
†1N3996A	5.1	490	1.1	550	1780	+/-.010	10	1.0	
†1N3997A	5.6	445	1.0	600	1620	+.030	10	1.0	
†1N3998A	6.2	405	1.1	750	1460	+.049	10	2.0	
†1N3999A	6.8	370	1.2	500	1330	+.040	10	2.0	
†1N4000A	7.5	335	1.3	250	1210	+.045	10	3.0	
†1N2970B	6.8	370	1.2	500	1320	.040	150	5.2	STD. POLARITY ANODE TO STUD
†1N2971B	7.5	335	1.3	250	1180	.045	100	5.7	
†1N2972B	8.2	305	1.5	250	1040	.048	50	6.2	
†1N2973B	9.1	275	2.0	250	960	.051	25	6.9	
†1N2974B	10	250	3	250	860	.055	25	7.6	
†1N2975B	11	230	3	250	780	.060	10	8.4	
†1N2976B	12	210	3	250	720	.065	10	9.1	
†1N2977B	13	190	3	250	660	.065	10	9.9	
1N2978B	14	180	3	250	600	.070	10	10.5	
†1N2979B	15	170	3	250	560	.070	10	11.4	
†1N2980B	16	155	4	250	530	.070	10	12.2	
1N2981B	17	145	4	250	500	.075	10	13.0	
†1N2982B	18	140	4	250	460	.075	10	13.7	
1N2983B	19	130	4	250	440	.075	10	14.0	
†1N2984B	20	125	4	250	420	.075	10	15.2	
†1N2985B	22	115	5	250	380	.080	10	16.7	
†1N2986B	24	105	5	250	350	.080	10	18.2	
1N2987B	25	100	6	250	310	.080	10	18.2	
†1N2988B	27	95	7	250	300	.085	10	20.6	
†1N2989B	30	85	8	300	280	.085	10	22.8	
†1N2990B	33	75	9	300	260	.085	10	25.1	
†1N2991B	36	70	10	300	230	.085	10	27.4	
†1N2992B	39	65	11	300	210	.090	10	29.7	
†1N2993B	43	60	12	400	195	.090	10	32.7	
1N2994B	45	55	13	400	185	.090	10	33.0	
†1N2995B	47	55	14	400	175	.090	10	35.8	
1N2996B	50	50	15	500	165	.090	10	36.0	
†1N2997B	51	50	15	500	160	.090	10	38.8	
1N2998B	52	50	15	500	160	.090	10	39.0	
†1N3099B	56	45	16	500	150	.090	10	42.6	
†1N3000B	62	40	17	600	130	.090	10	47.1	
†1N3001B	68	37	18	600	120	.090	10	51.7	
†1N3002B	75	33	22	600	110	.090	10	56.0	
†1N3003B	82	30	25	700	100	.090	10	62.2	
†1N3004B	91	28	35	800	85	.090	10	69.2	
†1N3005B	100	25	40	900	80	.090	10	76.0	
1N3006B	105	25	45	1000	75	.095	10	76.0	
†1N3007B	110	23	55	1100	72	.095	10	83.6	
†1N3008B	120	20	75	1200	67	.095	10	91.2	
†1N3009B	130	19	100	1300	62	.095	10	98.8	
1N3010B	140	18	125	1400	58	.095	10	100.0	
†1N3011B	150	17	175	1500	54	.095	10	114.0	
†1N3012B	160	16	200	1600	50	.095	10	121.6	
1N3013B	175	14	250	1750	46	.095	10	135.0	
†1N3014B	180	14	260	1850	45	.095	10	136.8	
†1N3015B	200	12	300	2000	40	.100	10	152.0	

*JEDEC Registered Data. **Not JEDEC Data.

†Have JAN and JANTX Qualifications to MIL-PRF-19500/124. See further notes on following page

Copyright © 2003

NOTES:

1. 1N3993 - 1N4000 series: suffix A indicates +/-5% tolerance, no suffix indicates +/-10% tolerance. 1N2970 – 1N3015 series: suffix B indicates +/- 5% tolerance, suffix A indicates +/-10%, no suffix indicates +/-20% tolerance. If tighter tolerance is required, consult factory.
2. The electrical characteristics are measured after allowing the device to stabilize for 90 seconds with 30°C Base temperature.
3. The zener impedance (Z_{ZT}) is derived from the 60 Hz ac voltage, which results when an ac current having an rms value equal to 10% of the dc zener current (I_{ZT} or I_{ZK}) is superimposed on I_{ZT} or I_{ZK}. When making zener impedance measurements at the I_{ZK} test point, it may be necessary to insert a 60 Hz band pass filter between the diode and voltmeter to avoid errors resulting from low level noise signals. A curve showing the variation of zener impedance vs. zener current for three representative types is shown in Figures 2 and 3. Also see Microsemi MicroNote 202.
4. These values of I_{ZM} may be exceeded in the case of individual diodes. The values shown are calculated for the worst case that is a unit of +/-5% tolerance at the high voltage end of its tolerance range. Allowance has also been made for the rise in zener voltage above V_{ZT}, which results from zener impedance and the increase in junction temperature as power dissipation approaches 10 watts.

GRAPHS

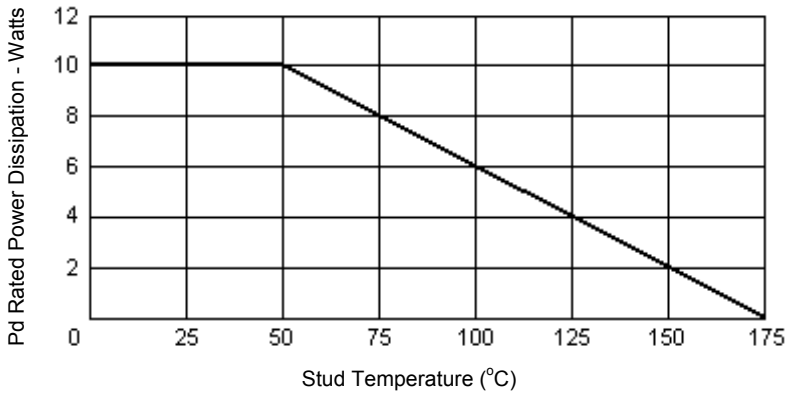

FIGURE 1
Power Derating Curve

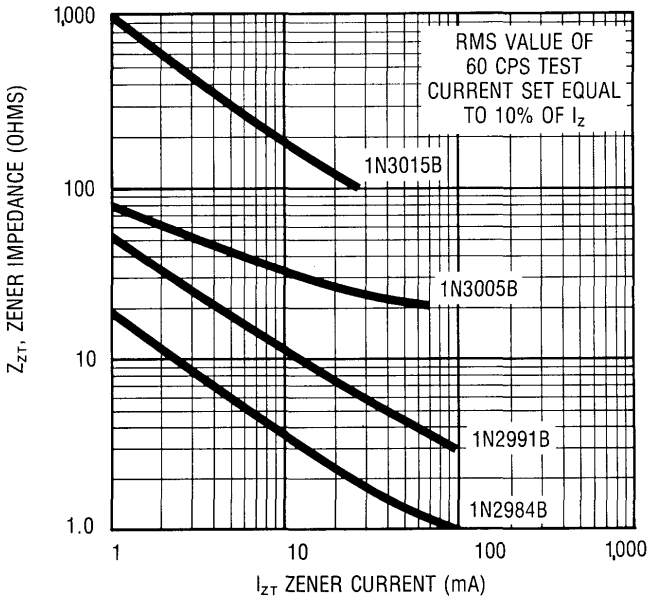

FIGURE 2
Typical Zener Impedance vs. Zener Current
For Types Shown

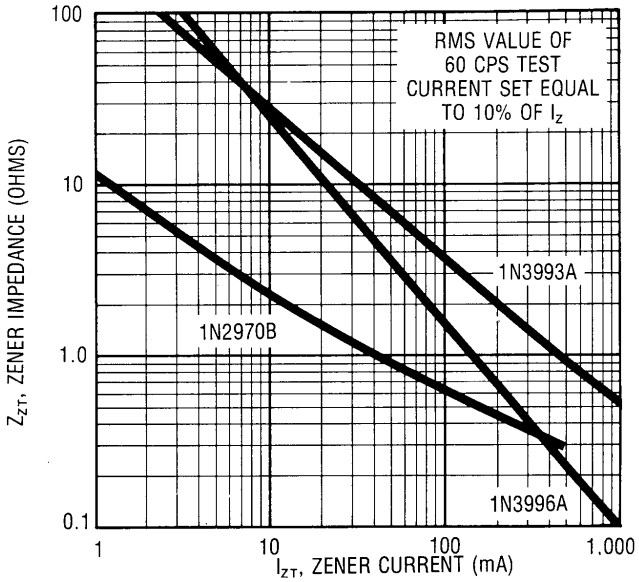

FIGURE 3
Typical Zener Impedance vs. Zener Current
For Types Shown

Copyright © 2003

Microsemi
Scottsdale Division
8700 E. Thomas Rd. PO Box 1390, Scottsdale, AZ 85252 USA, (480) 941-6300, Fax: (480) 947-1503

PACKAGE DIMENSIONS

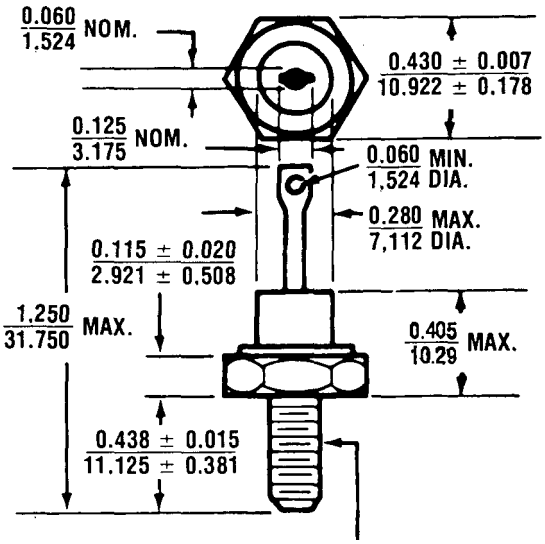

10-32 UNF-2A (MOD) PITCH DIA.
MIN. .1658 MAX. .1697 TO WITH-
STAND A TORQUE UP TO 30 IN-LB.
WHEN NUT IS TIGHTENED ON STUD

All dimensions in: INCH / mm

Copyright © 2003

Microsemi
Scottsdale Division
8700 E. Thomas Rd. PO Box 1390, Scottsdale, AZ 85252 USA, (480) 941-6300, Fax: (480) 947-1503

Общество с ограниченной ответственностью «МосЧип» ИНН 7719860671 / КПП 771901001
Адрес: 105318, г.Москва, ул.Щербаковская д.3, офис 1107

Данный компонент на территории Российской Федерации

Вы можете приобрести в компании MosChip.

Для оперативного оформления запроса Вам необходимо перейти по данной ссылке:

http://moschip.ru/get-element

Вы можете разместить у нас заказ для любого Вашего проекта, будь то серийное производство или разработка единичного прибора.

В нашем ассортименте представлены ведущие мировые производители активных и пассивных электронных компонентов.

Нашей специализацией является поставка электронной компонентной базы двойного назначения, продукции таких производителей как XILINX, Intel (ex.ALTERA), Vicor, Microchip, Texas Instruments, Analog Devices, Mini-Circuits, Amphenol, Glenair.

Сотрудничество с глобальными дистрибьюторами электронных компонентов, предоставляет возможность заказывать и получать с международных складов практически любой перечень компонентов в оптимальные для Вас сроки.

На всех этапах разработки и производства наши партнеры могут получить квалифицированную поддержку опытных инженеров.

Система менеджмента качества компании отвечает требованиям в соответствии с ГОСТ Р ИСО 9001, ГОСТ РВ 0015-002 и ЭС РД 009

Офис по работе с юридическими лицами:

105318, г.Москва, ул.Щербаковская д.3, офис 1107, 1118, ДЦ «Щербаковский»

Телефон: +7 495 668-12-70 (многоканальный)

Факс: +7 495 668-12-70 (доб.304)

E-mail: info@moschip.ru

Skype отдела продаж:
moschip.ru
moschip.ru_4
moschip.ru_6
moschip.ru_9