ALS70/71 Series, +85°C

Electronic Components KEMET CHARGED.

Overview

KEMET's ALS70/71 high CV series of the screw terminal capacitors offer tremendous performance and reliability in a wide range of case sizes and voltage ratings, featuring high ripple currents and long life performance. Volumetric efficiency ensures the maximum capacitance capability in a smaller size. They are ideally suited for industrial and commercial applications, demanding high reliability and long life expectancy such as frequency converters, uninterruptible power supply (UPS) systems and switch mode power supplies (SMPS).

Applications

Typical applications for KEMET's ALS70/71 Series of capacitors include alternative energy, smoothing, energy storage or pulse operation in telecommunication demanding power supplies, process control, AC motor control, traction, welding, and measuring.

Benefits

- Maximum capacitance capability in a smaller size
- Long life, up to 20,000 hours at +85°C (Vr, Ir applied)
- High ripple current
- Excellent surge voltage capability
- PET sleeve (recognized to UL: QMTR2 (UL No. E358957))
- Optimized designs available upon request

Click image above for interactive 3D content

Open PDF in Adobe Reader for full functionality

Part Number System

ALS7	0	A	303	DA	025	
Series	Stud Option	Termination	Capacitance Code (µF)	Size Code	Rated Voltage (VDC)	
Screw Terminal Aluminum Electrolytic	0 = Plain can 1 = Threaded mounting stud	See Termination Table	First two digits represent significant figures. Third digit specifies number of zeros.	See Dimension Table	025 = 25 040 = 40 063 = 63 100 = 100 200 = 200 250 = 250	350 = 350 400 = 400 450 = 450 500 = 500 550 = 550

© KEMET Electronics Corporation • P.O. Box 5928 • Greenville, SC 29606 • 864-963-6300 • www.kemet.com

Performance Characteristics

Item	Performance Characteristics		
Capacitance Range	300 – 1,300,000 µF		
Rated Voltage	25 – 550 VDC		
Operating Temperature	−40 to +85°C		
Storage Temperature Range	−55 to +85°C		
Capacitance Tolerance	±20% at 100 Hz/+20°C		
Operational Lifetime	D (mm)	Rated Voltage and Ripple Current at +85°C (hours)	Rated Voltage at +85°C (hours)
	36	11,000	22,000
	51	18,000	36,000
	63.5, 66	19,000	38,000
	77, 90	20,000	40,000
End of Life Requirement	ΔC/C < ±10%, ESR < 2 x initial ESR value, IL < initial specified limit		
Shelf Life	2,000 hours at +85°C or 30,000 hours at +40°C 0 VDC		
Leakage Current	I = 0.006 CV or 6,000 (µA, whichever is smaller)		
	C = rated capacitance (µF), V = rated voltage (VDC). Voltage applied for 5 minutes at +20°C.		
Vibration Test Specifications		Procedure	Requirements
	Case Length < 220 mm	0.75 mm displacement amplitude or 10 g maximum acceleration. Vibration applied for three 2-hour sessions at 10 – 55 Hz (Capacitor clamped by body).	No leakage of electrolyte or other visible damage. Deviations in capacitance from initial measurements must not exceed: Δ C/C < 5%
	Case Length ≥ 220 mm	0.35 mm displacement amplitude or 5 g maximum acceleration. Vibration applied for three 0.5-hour sessions at 10 – 55 Hz (Capacitor clamped by body).	
Standards	IEC 60384–4 long life grade 40/85/56		

Surge Voltage

Test Condition	Voltage (VDC)										
	25	40	63	100	200	250	350	400	450	500	550
≤ 30s Surge followed by a no load period of 330s, 1,000 cycles at +85°C	28.75	46	72.5	115	230	288	385	440	495	550	605
≤ 500 ms surge, 100 cycles at 20°C, occurring randomly throughout the life of the capacitor					350	400	500	520	550	600	620

Test Method & Performance

Endurance Life Test		
Conditions	Performance	
Temperature	+85°C	
Test Duration	5,000 hours	
Ripple Current	Rated ripple current specified in table	
Voltage	The sum of DC voltage and the peak AC voltage must not exceed the rated voltage of the capacitor	
Performance	**The following specifications will be satisfied when the capacitor is tested at +20°C:**	
Capacitance Change	≤ 160 V	Within 15% of the initial value
	> 160 V	Within 10% of the initial value
Equivalent Series Resistance	Does not exceed 200% of the initial value	
Leakage Current	Does not exceed leakage current limit	

Dimensions – Millimeters

Size Code	Dimensions in mm							Mounting Clip	Approximate Weight Grams
	D	L	LT	S	V Nominal		Mounting Stud (M x H)		
	±1	±2	±1	±0.5	Standard	Offset	±1		
DA	36	52	58.5	12.8	8		M8 x 12	V3/H2/2736	75
DB	36	62	67.5	12.8	8		M8 x 12	V3/H2/2736	90
DE	36	82	87.5	12.8	8		M8 x 12	V3/H2/2736	115
DF	36	105	111.5	12.8	8		M8 x 12	V3/H2/2736	140
KE	51	82	86.5	22.2	13.7		M12 x 16	V4/2737	220
KF	51	105	110.5	22.2	13.7		M12 x 16	V4/2737	300
LM	63.5	131	135	28.5	15.8		M12 x 16	V8	600
MF	66	105	110.5	28.5	15.8		M12 x 16	V10/2738	505
NF	77	105	110.5	31.8	19	34.9	M12 x 16	V11	690
NJ	77	115	119	31.8	19	34.9	M12 x 16	V11	766
NP	77	146	150.5	31.8	19	34.9	M12 x 16	V11	960
NW	77	169	174	31.8	19	34.9	M12 x 16	V11	1,160
NS	77	194	198	31.8	19	34.9	M12 x 16	V11	1,400
NT	77	220	224.5	31.8	19	34.9	M12 x 16	V11	1,450
QC	90	67	71.5	31.8	25		M12 x 16	PYC6045	615
QH	90	98	103.5	31.8	25		M12 x 16	PYC6045	900
QM	90	131	135	31.8	25		M12 x 16	PYC6045	1,300
QP	90	146	149.5	31.8	25		M12 x 16	PYC6045	1,345
QW	90	169	174	31.8	25		M12 x 16	PYC6045	1,500
QS	90	194	198	31.8	25		M12 x 16	PYC6045	1,800
QT	90	220	223.5	31.8	25		M12 x 16	PYC6045	2,000

Note: Dimensions include sleeving. LT listed is for A-type termination code. Information for other termination codes is available upon request.

Dimensions – Inches

Size Code	Dimensions in inches						
	D	L	LT	S	V Nominal		Mounting Stud (M x H)
	±1	±2	±1	±0.5	Standard	Offset	±1
DA	1.417	2.047	2.303	0.5039	0.3150		M8 x 0.472
DB	1.417	2.441	2.657	0.5039	0.3150		M8 x 0.472
DE	1.417	3.228	3.445	0.5039	0.3150		M8 x 0.472
DF	1.417	4.134	4.390	0.5039	0.3150		M8 x 0.472
KE	2.008	3.228	3.406	0.8740	0.5394		M12 x 0.630
KF	2.008	4.134	4.350	0.8740	0.5394		M12 x 0.630
LM	2.5	5.157	5.315	1.1220	0.6220		M12 x 0.630
MF	2.598	4.134	4.350	1.1220	0.6220		M12 x 0.630
NF	3.032	4.134	4.350	1.2520	0.7480	1.374	M12 x 0.630
NJ	3.032	4.528	4.685	1.2520	0.7480	1.374	M12 x 0.630
NP	3.032	5.748	5.925	1.2520	0.7480	1.374	M12 x 0.630
NW	3.032	6.654	6.850	1.2520	0.7480	1.374	M12 x 0.630
NS	3.032	7.638	7.795	1.2520	0.7480	1.374	M12 x 0.630
NT	3.032	8.661	8.839	1.2520	0.7480	1.374	M12 x 0.630
QC	3.543	2.638	2.815	1.2520	0.9843		M12 x 0.630
QH	3.543	3.858	4.075	1.2520	0.9843		M12 x 0.630
QM	3.543	5.157	5.315	1.2520	0.9843		M12 x 0.630
QP	3.543	5.748	5.886	1.2520	0.9843		M12 x 0.630
QW	3.543	6.654	6.850	1.2520	0.9843		M12 x 0.630
QS	3.543	7.638	7.795	1.2520	0.9843		M12 x 0.630
QT	3.543	8.661	223.5	1.2520	0.9843		M12 x 0.630

Note: Dimensions include sleeving. LT listed is for A-type termination code. Information for other termination codes is available upon request.

Termination Tables

Termination Code Diameter (mm/inches)	A	C	G	H	P	U
36/1.417	•			•		
51/2.008	•			•		
63.5/2.5	•	•		•		
66/2.598	•	•		•		
77/3.032	•	•	•	•	•	•
90/3.543	•	•	•	•		

Termination Tables (cont.d)

Termination Code	Thread	Termination Style	T mm	T inches	DT mm	DT inches	Thread Depth (TD) mm/inches	Z mm/inches
			± 0.5	±0.019	± 0.5	±0.019	Minimum	Nominal
Standard Termination Option								
A (D = 36)	M5	Round	7.14	0.281	8	0.315	10/0.394	
A (D > 36)	M5	Oval	5.5	0.217	13	0.512	10/0.394	10/0.394
Other Termination Options								
C	M6	Round	5.5	0.217	13	0.512	10/0.394	
G	M6	Round	6.35	0.25	17	0.67	11.8/0.465	
H	10-32 UNF class 2B	Round	7.14	0.281	8	0.315	10/0.394	
P (offset)	M6	Round	6.35	0.25	17	0.67	11.8/0.465	
U (offset)	M5	Round	7.14	0.281	13	0.512	10/0.394	
Dimensions in mm and inches								

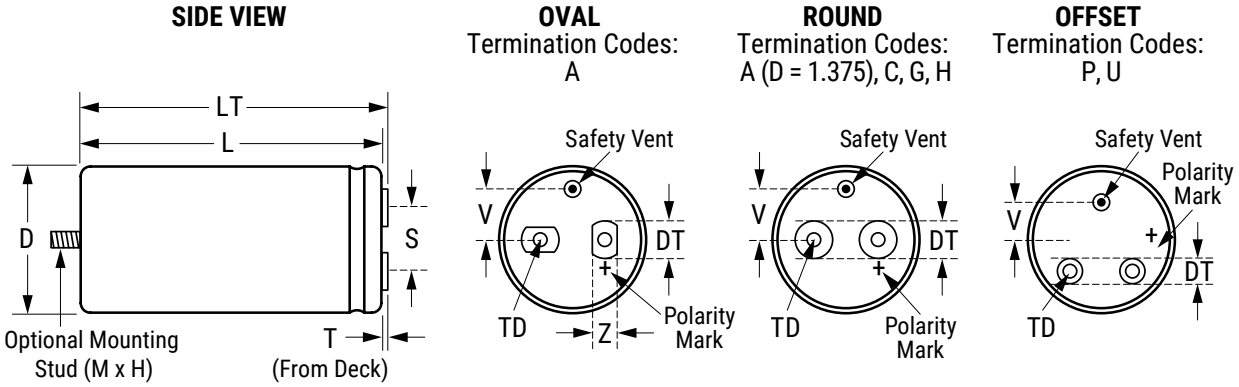

Case Polarity

Due to the presence of electrolyte in the capacitor, the aluminum can and stud mounting will essentially be at the same polarity as the negative terminal. We recommend that the stud and can be insulated (see accessories for insulating nuts).

Terminations

Aluminum inserts with M5 threads as standard, maximum torque 2NM. Optional M6 threaded inserts have a maximum torque 4NM. Maximum torque for stud mounting M8:4NM and M12:8NM.

Shelf Life

The capacitance, ESR and impedance of a capacitor will not change significantly after extended storage periods, however the leakage current will very slowly increase. KEMET products are particularly stable and allow a shelf life in excess of three years at 40°C. See sectional specification under each product series for specific data.

Re-age (Reforming) Procedure

Apply the rated voltage to the capacitor at room temperature for a period of one hour, or until the leakage current has fallen to a steady value below the specified limit. During re-aging a maximum charging current of twice the specified leakage current or 5 mA (whichever is greater) is suggested.

Reliability

The reliability of a component can be defined as the probability that it will perform satisfactorily under a given set of conditions for a given length of time.

In practice, it is impossible to predict with absolute certainty how any individual component will perform; thus, we must utilize probability theory. It is also necessary to clearly define the level of stress involved (e.g. operating voltage, ripple current, temperature and time). Finally, the meaning of satisfactory performance must be defined by specifying a set of conditions which determine the end of life of the component.

Reliability as a function of time, R(t), is normally expressed as: $R(t)=e^{-\lambda t}$
where R(t) is the probability that the component will perform satisfactorily for time t, and λ is the failure rate.

Failure Rate

The failure rate is the number of components failing per unit time. The failure rate of most electronic components follows the characteristic pattern:

- Early failures are removed during the manufacturing process.
- The operational life is characterized by a constant failure rate.
- The wear out period is characterized by a rapidly increasing failure rate.

The failures in time (FIT) are given with a 60% confidence level for the various type codes. By convention, FIT is expressed as 1×10^{-9} failures per hour. Failure rate is also expressed as a percentage of failures per 1,000 hours.
e.g., 100 FIT = 1×10^{-7} failures per hour = 0.01%/1,000 hours

End of Life Definition
Catastrophic Failure: short circuit, open circuit or safety vent operation
Parametric Failure:

- Change in capacitance > ±10%
- Leakage current > specified limit
- ESR > 2 x initial ESR value

MTBF

The mean time between failures (MTBF) is simply the inverse of the failure rate.
MTBF= 1/λ

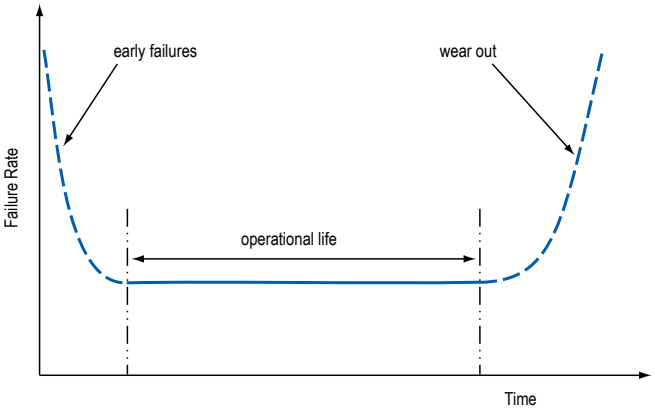

The failure rate is derived from our periodic test results. The failure rate (λR) is, therefore, only given at test temperature for life tests. An estimation is also given at 40°C. The expected failure rate for this capacitor range is based on our periodic test results for capacitors with structural similarity. Failure rate is frequently quoted in FIT (Failures In Time) where 1 FIT = 1 x 10-9 failures per hour. Failure rates include both catastrophic and parametric failures.

T_a	**Failure Rate per Hour**
85°C	250 FIT
40°C	12 FIT

Environmental Compliance

As an environmentally conscious company, KEMET is working continuously with improvements concerning the environmental effects of both our capacitors and their production. In Europe (RoHS Directive) and in some other geographical areas like China, legislation has been put in place to prevent the use of some hazardous materials, such as lead (Pb), in electronic equipment. All products in this catalog are produced to help our customers' obligations to guarantee their products and fulfill these legislative requirements. The only material of concern in our products has been lead (Pb), which has been removed from all designs to fulfill the requirement of containing less than 0.1% of lead in any homogeneous material. KEMET will closely follow any changes in legislation world wide and makes any necessary changes in its products, whenever needed.

Some customer segments such as medical, military and automotive electronics may still require the use of lead in electrode coatings. To clarify the situation and distinguish products from each other, a special symbol is used on the packaging labels for RoHS compatible capacitors.

Because of customer requirements, there may appear additional markings such as LF = Lead Free or LFW = Lead Free Wires on the label.

Table 1 – Ratings & Part Number Reference

VDC	Rated Capacitance	Size Code	Case Size	Ripple Current		ESR Maximum	Impedance Maximum	Part Number
	100 Hz 20°C (µF)		D x L (mm)	100 Hz 85°C (A)	10 kHz 85°C (A)	100 Hz 20°C (mΩ)	10 kHz 20°C (mΩ)	
25	30,000	DA	36 x 52	9.6	11.1	47	42	ALS7(1)(2)303DA025
25	39,000	DB	36 x 62	11.0	12.7	37	33	ALS7(1)(2)393DB025
25	62,000	DE	36 x 82	13.5	15.1	25	23	ALS7(1)(2)623DE025
25	82,000	DF	36 x 105	14.6	16.1	20	19	ALS7(1)(2)823DF025
25	130,000	KE	51 x 82	17.5	18.5	17	16	ALS7(1)(2)134KE025
25	180,000	KF	51 x 105	20.3	21.4	13	13	ALS7(1)(2)184KF025
25	300,000	LM	63.5 x 131	28.9	30.2	9	9	ALS7(1)(2)304LM025
25	330,000	MF	66 x 105	27.9	29.0	9	9	ALS7(1)(2)334MF025
25	470,000	NF	77 x 105	28.0	28.6	9	10	ALS7(1)(2)474NF025
25	470,000	NJ	77 x 115	28.8	29.4	9	9	ALS7(1)(2)474NJ025
25	560,000	NP	77 x 146	31.3	31.9	8	9	ALS7(1)(2)564NP025
25	680,000	NW	77 x 169	33.1	33.7	7	8	ALS7(1)(2)684NW025
25	910,000	NS	77 x 194	34.3	34.8	6	8	ALS7(1)(2)914NS025
25	910,000	NT	77 x 220	34.4	34.9	6	8	ALS7(1)(2)914NT025
25	270,000	QC	90 x 67	23.0	23.7	13	13	ALS7(1)(2)274QC025
25	560,000	QH	90 x 98	32.0	32.7	8	9	ALS7(1)(2)564QH025
25	620,000	QM	90 x 131	36.1	36.9	7	8	ALS7(1)(2)624QM025
25	750,000	QP	90 x 146	38.3	39.1	6	8	ALS7(1)(2)754QP025
25	1,000,000	QW	90 x 169	40.7	41.3	5	7	ALS7(1)(2)105QW025
25	1,200,000	QS	90 x 194	42.3	42.9	5	7	ALS7(1)(2)125QS025
25	1,300,000	QT	90 x 220	42.9	43.5	5	7	ALS7(1)(2)135QT025
40	18,000	DA	36 x 52	9.0	11.2	49	42	ALS7(1)(2)183DA040
40	24,000	DB	36 x 62	10.5	12.8	38	32	ALS7(1)(2)243DB040
40	36,000	DE	36 x 82	12.7	15.1	27	23	ALS7(1)(2)363DE040
40	51,000	DF	36 x 105	14.3	16.4	20	18	ALS7(1)(2)513DF040
40	75,000	KE	51 x 82	17.0	18.6	18	16	ALS7(1)(2)753KE040
40	110,000	KF	51 x 105	19.9	21.4	13	13	ALS7(1)(2)114KF040
40	180,000	LM	63.5 x 131	28.4	30.3	9	9	ALS7(1)(2)184LM040
40	180,000	MF	66 x 105	27.4	29.2	9	9	ALS7(1)(2)184MF040
40	270,000	NF	77 x 105	27.8	28.8	9	10	ALS7(1)(2)274NF040
40	270,000	NJ	77 x 115	28.5	29.6	9	9	ALS7(1)(2)274NJ040
40	330,000	NP	77 x 146	31.0	32.1	8	9	ALS7(1)(2)334NP040
40	430,000	NW	77 x 169	33.0	33.9	7	8	ALS7(1)(2)434NW040
40	510,000	NS	77 x 194	34.1	34.9	7	8	ALS7(1)(2)514NS040
40	560,000	NT	77 x 220	34.5	35.3	6	8	ALS7(1)(2)564NT040
40	160,000	QC	90 x 67	22.7	23.7	13	13	ALS7(1)(2)164QC040
40	330,000	QH	90 x 98	31.6	32.7	8	9	ALS7(1)(2)334QH040
40	390,000	QM	90 x 131	35.5	36.7	7	8	ALS7(1)(2)394QM040
40	470,000	QP	90 x 146	37.9	39.0	6	8	ALS7(1)(2)474QP040
40	560,000	QW	90 x 169	40.5	41.6	5	7	ALS7(1)(2)564QW040
40	680,000	QS	90 x 194	42.0	43.1	5	7	ALS7(1)(2)684QS040
40	750,000	QT	90 x 220	42.7	43.7	5	7	ALS7(1)(2)754QT040
63	8,200	DA	36 x 52	8.0	11.1	56	44	ALS7(1)(2)822DA063
63	11,000	DB	36 x 62	9.4	12.7	43	34	ALS7(1)(2)113DB063
63	16,000	DE	36 x 82	11.4	14.9	31	24	ALS7(1)(2)163DE063
63	24,000	DF	36 x 105	13.2	16.4	22	18	ALS7(1)(2)243DF063
63	33,000	KE	51 x 82	16.1	18.7	20	17	ALS7(1)(2)333KE063
63	51,000	KF	51 x 105	19.1	21.5	14	13	ALS7(1)(2)513KF063
63	91,000	LM	63.5 x 131	27.6	30.4	9	9	ALS7(1)(2)913LM063
63	91,000	MF	66 x 105	26.6	29.3	9	9	ALS7(1)(2)913MF063
63	130,000	NF	77 x 105	27.3	28.9	9	10	ALS7(1)(2)134NF063
63	130,000	NJ	77 x 115	28.1	29.8	9	9	ALS7(1)(2)134NJ063
63	160,000	NP	77 x 146	30.6	32.2	8	9	ALS7(1)(2)164NP063
63	200,000	NW	77 x 169	32.5	34.1	7	8	ALS7(1)(2)204NW063
63	240,000	NS	77 x 194	33.7	35.1	7	8	ALS7(1)(2)244NS063
63	270,000	NT	77 x 220	34.2	35.5	7	8	ALS7(1)(2)274NT063
63	75,000	QC	90 x 67	22.3	24.0	14	13	ALS7(1)(2)753QC063
63	150,000	QH	90 x 98	31.3	33.3	8	9	ALS7(1)(2)154QH063
VDC	Rated Capacitance	Size Code	Case Size	Ripple Current		ESR	Impedance	Part Number

(1) Mounting Code: 0 = plain can, 1 = threaded mounting stud
(2) Termination Code: See Termination Tables for available options

Table 1 – Ratings & Part Number Reference cont'd

VDC	Rated Capacitance	Size Code	Case Size	Ripple Current		ESR Maximum	Impedance Maximum	Part Number
	100 Hz 20°C (µF)		D x L (mm)	100 Hz 85°C (A)	10 kHz 85°C (A)	100 Hz 20°C (mΩ)	10 kHz 20°C (mΩ)	
63	180,000	QM	90 x 131	35.1	37.1	7	8	ALS7(1)(2)184QM063
63	220,000	QP	90 x 146	37.4	39.3	6	8	ALS7(1)(2)224QP063
63	270,000	QW	90 x 169	40.0	41.8	6	7	ALS7(1)(2)274QW063
63	330,000	QS	90 x 194	41.7	43.3	5	7	ALS7(1)(2)334QS063
63	360,000	QT	90 x 220	42.3	43.8	5	7	ALS7(1)(2)364QT063
100	3,300	DA	36 x 52	6.6	9.3	99	81	ALS7(1)(2)332DA100
100	4,300	DB	36 x 62	7.8	10.7	77	63	ALS7(1)(2)432DB100
100	6,800	DE	36 x 82	9.9	13.2	50	41	ALS7(1)(2)682DE100
100	9,100	DF	36 x 105	11.2	14.4	39	32	ALS7(1)(2)912DF100
100	13,000	KE	51 x 82	14.3	17.3	31	26	ALS7(1)(2)133KE100
100	20,000	KF	51 x 105	17.2	20.1	22	19	ALS7(1)(2)203KF100
100	3600	LM	63.5 x 131	25.3	28.8	13	12	ALS7(1)(2)363LM100
100	36,000	MF	66 x 105	24.5	27.7	14	12	ALS7(1)(2)363MF100
100	51,000	NF	77 x 105	25.7	27.9	12	12	ALS7(1)(2)513NF100
100	51,000	NJ	77 x 115	26.4	28.7	12	12	ALS7(1)(2)513NJ100
100	62,000	NP	77 x 146	28.9	31.2	11	10	ALS7(1)(2)623NP100
100	75,000	NW	77 x 169	30.9	33.1	9	9	ALS7(1)(2)753NW100
100	100,000	NS	77 x 194	32.5	34.3	8	9	ALS7(1)(2)104NS100
100	100,000	NT	77 x 220	32.6	34.4	8	9	ALS7(1)(2)104NT100
100	30,000	QC	90 x 67	20.7	22.8	19	17	ALS7(1)(2)303QC100
100	62,000	QH	90 x 98	29.4	31.8	10	11	ALS7(1)(2)623QH100
100	68,000	QM	90 x 131	33.2	36.0	9	10	ALS7(1)(2)683QM100
100	82,000	QP	90 x 146	35.5	38.2	8	9	ALS7(1)(2)823QP100
100	110,000	QW	90 x 169	38.2	40.6	7	8	ALS7(1)(2)114QW100
100	130,000	QS	90 x 194	40.0	42.2	6	8	ALS7(1)(2)134QS100
100	130,000	QT	90 x 220	40.2	42.6	6	8	ALS7(1)(2)134QT100
200	1,200	DA	36 x 52	4.0	7.0	230	159	ALS7(1)(2)122DA200
200	1,500	DB	36 x 62	4.6	8.0	184	128	ALS7(1)(2)152DB200
200	2,400	DE	36 x 82	6.0	10.2	117	82	ALS7(1)(2)242DE200
200	3,300	DF	36 x 105	7.1	11.7	87	61	ALS7(1)(2)332DF200
200	4,700	KE	51 x 82	9.4	13.6	68	49	ALS7(1)(2)472KE200
200	6,800	KF	51 x 105	11.4	16.3	48	35	ALS7(1)(2)682KF200
200	12,000	LM	63.5 x 131	17.3	23.5	29	21	ALS7(1)(2)123LM200
200	12,000	MF	66 x 105	16.8	22.7	29	22	ALS7(1)(2)123MF200
200	18,000	NF	77 x 105	18.8	23.0	24	19	ALS7(1)(2)183NF200
200	18,000	NJ	77 x 115	19.3	23.7	24	19	ALS7(1)(2)183NJ200
200	22,000	NP	77 x 146	21.6	26.1	20	16	ALS7(1)(2)223NP200
200	27,000	NW	77 x 169	23.7	28.3	17	14	ALS7(1)(2)273NW200
200	33,000	NS	77 x 194	25.4	29.9	15	12	ALS7(1)(2)333NS200
200	36,000	NT	77 x 220	26.2	30.5	14	12	ALS7(1)(2)363NT200
200	10,000	QC	90 x 67	14.5	18.3	40	31	ALS7(1)(2)103QC200
200	20,000	QH	90 x 98	21.3	26.3	21	17	ALS7(1)(2)203QH200
200	24,000	QM	90 x 131	24.4	29.8	18	15	ALS7(1)(2)243QM200
200	30,000	QP	90 x 146	26.7	32.0	15	13	ALS7(1)(2)303QP200
200	36,000	QW	90 x 169	29.3	34.8	13	11	ALS7(1)(2)363QW200
200	47,000	QS	90 x 194	31.9	37.0	11	10	ALS7(1)(2)473QS200
200	47,000	QT	90 x 220	32.4	37.8	11	10	ALS7(1)(2)473QT200
250	910	DA	36 x 52	3.6	6.9	256	166	ALS7(1)(2)911DA250
250	1,200	DB	36 x 62	4.3	8.1	195	127	ALS7(1)(2)122DB250
250	1,800	DE	36 x 82	5.5	10.1	131	86	ALS7(1)(2)182DE250
250	2,400	DF	36 x 105	6.3	11.3	100	65	ALS7(1)(2)242DF250
250	3,600	KE	51 x 82	8.7	13.6	74	50	ALS7(1)(2)362KE250
250	5,100	KF	51 x 105	10.6	16.2	53	36	ALS7(1)(2)512KF250
250	9,100	LM	63.5 x 131	16.2	23.5	31	22	ALS7(1)(2)912LM250
250	9,100	MF	66 x 105	15.8	22.7	31	22	ALS7(1)(2)912MF250
250	13,000	NF	77 x 105	17.9	23.2	26	19	ALS7(1)(2)133NF250
250	13,000	NJ	77 x 115	18.3	23.9	26	19	ALS7(1)(2)133NJ250
250	16,000	NP	77 x 146	20.5	26.2	22	17	ALS7(1)(2)163NP250
VDC	Rated Capacitance	Size Code	Case Size	Ripple Current		ESR	Impedance	Part Number

(1) Mounting Code: 0 = plain can, 1 = threaded mounting stud
(2) Termination Code: See Termination Tables for available options

Table 1 – Ratings & Part Number Reference cont'd

VDC	Rated Capacitance	Size Code	Case Size	Ripple Current		ESR Maximum	Impedance Maximum	Part Number
	100 Hz 20°C (µF)		D x L (mm)	100 Hz 85°C (A)	10 kHz 85°C (A)	100 Hz 20°C (mΩ)	10 kHz 20°C (mΩ)	
250	20,000	NW	77 x 169	22.6	28.3	18	14	ALS7(1)(2)203NW250
250	24,000	NS	77 x 194	24.1	29.8	16	12	ALS7(1)(2)243NS250
250	27,000	NT	77 x 220	25.1	30.5	15	12	ALS7(1)(2)273NT250
250	8,200	QC	90 x 67	13.9	18.1	41	30	ALS7(1)(2)822QC250
250	16,000	QH	90 x 98	20.6	26.3	22	17	ALS7(1)(2)163QH250
250	18,000	QM	90 x 131	23.3	29.9	19	15	ALS7(1)(2)183QM250
250	22,000	QP	90 x 146	25.5	32.2	16	13	ALS7(1)(2)223QP250
250	27,000	QW	90 x 169	28.0	35.0	14	11	ALS7(1)(2)273QW250
250	36,000	QS	90 x 194	30.9	37.1	11	10	ALS7(1)(2)363QS250
250	36,000	QT	90 x 220	31.3	37.9	11	10	ALS7(1)(2)363QT250
350	560	DA	36 x 52	3.1	6.8	298	174	ALS7(1)(2)561DA350
350	750	DB	36 x 62	3.8	8.0	224	131	ALS7(1)(2)751DB350
350	1,100	DE	36 x 82	4.7	9.9	154	90	ALS7(1)(2)112DE350
350	1,600	DF	36 x 105	5.8	11.6	108	64	ALS7(1)(2)162DF350
350	2,400	KE	51 x 82	8.1	13.6	80	49	ALS7(1)(2)242KE350
350	3,300	KF	51 x 105	9.7	16.2	59	36	ALS7(1)(2)332KF350
350	5,600	LM	63.5 x 131	14.6	23.5	36	22	ALS7(1)(2)562LM350
350	6,200	MF	66 x 105	14.8	22.7	33	21	ALS7(1)(2)622MF350
350	8,200	NF	77 x 105	16.6	23.2	29	19	ALS7(1)(2)822NF350
350	8,200	NJ	77 x 115	17.0	23.8	29	19	ALS7(1)(2)822NJ350
350	10,000	NP	77 x 146	19.1	26.2	24	16	ALS7(1)(2)103NP350
350	13,000	NW	77 x 169	21.3	28.3	20	14	ALS7(1)(2)133NW350
350	16,000	NS	77 x 194	23.1	29.9	17	12	ALS7(1)(2)163NS350
350	16,000	NT	77 x 220	23.2	30.3	16	12	ALS7(1)(2)163NT350
350	5,100	QC	90 x 67	12.9	18.1	46	30	ALS7(1)(2)512QC350
350	10,000	QH	90 x 98	19.1	26.3	24	17	ALS7(1)(2)103QH350
350	12,000	QM	90 x 131	21.9	29.7	21	14	ALS7(1)(2)123QM350
350	13,000	QP	90 x 146	23.4	32.3	18	13	ALS7(1)(2)133QP350
350	18,000	QW	90 x 169	26.7	34.9	15	11	ALS7(1)(2)183QW350
350	22,000	QS	90 x 194	28.9	37.1	13	10	ALS7(1)(2)223QS350
350	24,000	QT	90 x 220	30.0	38.0	12	9	ALS7(1)(2)243QT350
400	510	DA	36 x 52	3.1	6.9	304	172	ALS7(1)(2)511DA400
400	620	DB	36 x 62	3.5	7.8	250	142	ALS7(1)(2)621DB400
400	1,000	DE	36 x 82	4.6	10.0	157	89	ALS7(1)(2)102DE400
400	1,300	DF	36 x 105	5.3	11.2	122	70	ALS7(1)(2)132DF400
400	2,000	KE	51 x 82	7.6	13.6	87	52	ALS7(1)(2)202KE400
400	3,000	KF	51 x 105	9.5	16.3	60	36	ALS7(1)(2)302KF400
400	5,100	LM	63.5 x 131	14.5	23.5	36	21	ALS7(1)(2)512LM400
400	5,100	MF	66 x 105	14.0	22.7	36	22	ALS7(1)(2)512MF400
400	7,500	NF	77 x 105	16.4	23.0	29	19	ALS7(1)(2)752NF400
400	7,500	NJ	77 x 115	16.7	23.7	29	19	ALS7(1)(2)752NJ400
400	9,100	NP	77 x 146	18.8	26.1	24	16	ALS7(1)(2)912NP400
400	11,000	NW	77 x 169	20.7	28.3	21	14	ALS7(1)(2)113NW400
400	13,000	NS	77 x 194	22.1	29.8	18	12	ALS7(1)(2)133NS400
400	15,000	NT	77 x 220	23.3	30.6	16	12	ALS7(1)(2)153NT400
400	4,300	QC	90 x 67	12.4	18.1	48	31	ALS7(1)(2)432QC400
400	8,200	QH	90 x 98	18.4	26.4	26	17	ALS7(1)(2)822QH400
400	10,000	QM	90 x 131	21.1	29.8	22	14	ALS7(1)(2)103QM400
400	12,000	QP	90 x 146	23.2	32.1	19	12	ALS7(1)(2)123QP400
400	15,000	QW	90 x 169	25.8	34.9	15	11	ALS7(1)(2)153QW400
400	18,000	QS	90 x 194	27.8	37.0	13	10	ALS7(1)(2)183QS400
400	20,000	QT	90 x 220	29.1	37.9	12	9	ALS7(1)(2)203QT400
450	430	DA	36 x 52	2.9	6.1	399	251	ALS7(1)(2)431DA450
450	510	DB	36 x 62	3.2	6.9	336	212	ALS7(1)(2)511DB450
450	820	DE	36 x 82	4.3	8.9	211	133	ALS7(1)(2)821DE450
450	1,200	DF	36 x 105	5.3	10.6	146	93	ALS7(1)(2)122DF450
450	1,600	KE	51 x 82	7.0	12.5	117	76	ALS7(1)(2)162KE450
450	2,400	KF	51 x 105	8.8	15.2	80	52	ALS7(1)(2)242KF450
VDC	**Rated Capacitance**	**Size Code**	**Case Size**	**Ripple Current**		**ESR**	**Impedance**	**Part Number**

(1) Mounting Code: 0 = plain can, 1 = threaded mounting stud
(2) Termination Code: See Termination Tables for available options

Table 1 – Ratings & Part Number Reference cont'd

VDC	Rated Capacitance	Size Code	Case Size	Ripple Current		ESR Maximum	Impedance Maximum	Part Number
	100 Hz 20°C (µF)		D x L (mm)	100 Hz 85°C (A)	10 kHz 85°C (A)	100 Hz 20°C (mΩ)	10 kHz 20°C (mΩ)	
450	4,300	LM	63.5 x 131	13.7	22.2	46	30	ALS7(1)(2)432LM450
450	4,300	MF	66 x 105	13.3	21.5	46	30	ALS7(1)(2)432MF450
450	6,200	NF	77 x 105	15.6	22.2	37	25	ALS7(1)(2)622NF450
450	6,200	NJ	77 x 115	15.9	22.9	36	25	ALS7(1)(2)622NJ450
450	7,500	NP	77 x 146	17.9	25.3	31	21	ALS7(1)(2)752NP450
450	9,100	NW	77 x 169	19.7	27.4	26	18	ALS7(1)(2)912NW450
450	12,000	NS	77 x 194	21.9	29.2	21	15	ALS7(1)(2)123NS450
450	12,000	NT	77 x 220	22.0	29.6	21	15	ALS7(1)(2)123NT450
450	3,600	QC	90 x 67	11.8	17.5	61	41	ALS7(1)(2)362QC450
450	7,500	QH	90 x 98	17.9	25.2	31	21	ALS7(1)(2)752QH450
450	8,200	QM	90 x 131	20.0	28.8	28	19	ALS7(1)(2)822QM450
450	10,000	QP	90 x 146	22.1	31.1	23	16	ALS7(1)(2)103QP450
450	13,000	QW	90 x 169	24.9	33.9	19	14	ALS7(1)(2)133QW450
450	16,000	QS	90 x 194	27.2	36.2	16	12	ALS7(1)(2)163QS450
450	16,000	QT	90 x 220	27.4	36.8	16	12	ALS7(1)(2)163QT450
500	360	DA	36 x 52	2.6	5.1	691	520	ALS7(1)(2)361DA500
500	470	DB	36 x 62	3.1	6.0	531	399	ALS7(1)(2)471DB500
500	680	DE	36 x 82	3.9	7.5	368	277	ALS7(1)(2)681DE500
500	1,000	DF	36 x 105	4.8	9.0	252	190	ALS7(1)(2)102DF500
500	1,300	KE	51 x 82	6.4	11.1	203	154	ALS7(1)(2)132KE500
500	2,000	KF	51 x 105	8.1	13.6	134	102	ALS7(1)(2)202KF500
500	3,300	LM	63.5 x 131	12.6	20.4	76	58	ALS7(1)(2)332LM500
500	3,300	MF	66 x 105	12.3	19.7	77	58	ALS7(1)(2)332MF500
500	4,700	NF	77 x 105	14.5	21.1	59	45	ALS7(1)(2)472NF500
500	5,100	NJ	77 x 115	15.2	21.7	55	43	ALS7(1)(2)512NJ500
500	5,600	NP	77 x 146	16.6	24.0	49	38	ALS7(1)(2)562NP500
500	7,500	NW	77 x 169	18.9	26.3	38	30	ALS7(1)(2)752NW500
500	9,100	NS	77 x 194	20.5	27.9	32	25	ALS7(1)(2)912NS500
500	10,000	NT	77 x 220	21.4	28.7	30	24	ALS7(1)(2)103NT500
500	2,700	QC	90 x 67	11.0	16.5	100	76	ALS7(1)(2)272QC500
500	5,600	QH	90 x 98	16.7	24.0	50	38	ALS7(1)(2)562QH500
500	6,800	QM	90 x 131	19.2	27.3	41	32	ALS7(1)(2)682QM500
500	8,200	QP	90 x 146	21.2	29.7	35	27	ALS7(1)(2)822QP500
500	10,000	QW	90 x 169	23.5	32.4	29	23	ALS7(1)(2)103QW500
500	12,000	QS	90 x 194	25.4	34.6	24	19	ALS7(1)(2)123QS500
500	13,000	QT	90 x 220	26.5	35.5	23	18	ALS7(1)(2)133QT500
550	300	DA	36 x 52	2.4	4.1	1474	1284	ALS7(1)(2)301DA550
550	390	DB	36 x 62	2.8	4.8	1135	988	ALS7(1)(2)391DB550
550	560	DE	36 x 82	3.5	6.0	791	689	ALS7(1)(2)561DE550
550	820	DF	36 x 105	4.4	7.3	542	473	ALS7(1)(2)821DF550
550	1,200	KE	51 x 82	6.1	9.7	385	336	ALS7(1)(2)122KE550
550	1,600	KF	51 x 105	7.3	11.5	289	252	ALS7(1)(2)162KF550
550	2,700	LM	63.5 x 131	11.4	17.5	161	140	ALS7(1)(2)272LM550
550	2,700	MF	66 x 105	11.1	17.0	162	140	ALS7(1)(2)272MF550
550	3,900	NF	77 x 105	13.4	19.0	118	103	ALS7(1)(2)392NF550
550	4,300	NJ	77 x 115	14.2	19.8	108	95	ALS7(1)(2)432NJ550
550	5,100	NP	77 x 146	15.9	22.0	92	80	ALS7(1)(2)512NP550
550	6,200	NW	77 x 169	17.6	24.0	76	66	ALS7(1)(2)622NW550
550	7,500	NS	77 x 194	19.1	25.7	63	55	ALS7(1)(2)752NS550
550	8,200	NT	77 x 220	19.9	26.5	58	51	ALS7(1)(2)822NT550
550	2,400	QC	90 x 67	10.3	14.8	191	167	ALS7(1)(2)242QC550
550	4,700	QH	90 x 98	15.5	21.8	98	86	ALS7(1)(2)472QH550
550	5,600	QM	90 x 131	17.8	24.8	83	72	ALS7(1)(2)562QM550
550	6,800	QP	90 x 146	19.7	27.1	69	60	ALS7(1)(2)682QP550
550	8,200	QW	90 x 169	21.7	29.7	57	50	ALS7(1)(2)822QW550
550	11,000	QS	90 x 194	24.7	32.5	44	39	ALS7(1)(2)113QS550
550	11,000	QT	90 x 220	24.9	33.0	44	38	ALS7(1)(2)113QT550
VDC	**Rated Capacitance**	**Size Code**	**Case Size**	**Ripple Current**		**ESR**	**Impedance**	**Part Number**

(1) Mounting Code: 0 = plain can, 1 = threaded mounting stud
(2) Termination Code: See Termination Tables for available options

Mechanical Data

Polarity and Reversed Voltage
Aluminium Electrolytic capacitors manufactured for the use in DC applications contain an anode foil and a cathode foil. As such, they are polarized devices and must be connected with the +ve to the anode foil and the -ve to the cathode foil. If this were to be reversed, then the electrolytic process that took place in forming the oxide layer on the anode would be recreated in trying to form an oxide layer on the cathode. In forming the cathode foil in this way, heat would be generated and gas would be given off within the capacitor, usually leading to a catastrophic failure.

The cathode foil already possesses a thin stabilized oxide layer. This thin oxide layer is equivalent to a forming voltage of approximately 2 V. As a result, the capacitor can withstand a voltage reversal of up to 2 V for short periods. Above this voltage, the formation process will commence. Aluminium Electrolytic capacitors can also be manufactured for the use in intermittent AC applications by using two anode foils in place of one anode and one cathode.

Mounting Position
The capacitor can be mounted in any position as long as the safety vent can operate. It is possible for some electrolyte to be expelled. As this is a conducting liquid, suitable precautions should be initiated by the system designer to avoid secondary short circuits.

The capacitors are designed to be mounted in free air and are not suitable for submersion in liquid.

Insulating Resistance
≥ 100 MΩ at 100 VDC across insulating sleeve.
UL recognized sleeving is available for custom parts in this range, upon request. (UL No. E358957)

Voltage Proof
>= 3,500 VDC across insulating Sleeve
>= 2,500 VAC across insulating Sleeve

Safety Vent
A safety vent for overpressure is featured on the terminal deck in the form of a rubber plug, designed to relieve build-up of internal pressure due to overstress or catastrophic failure.

Marking

Construction

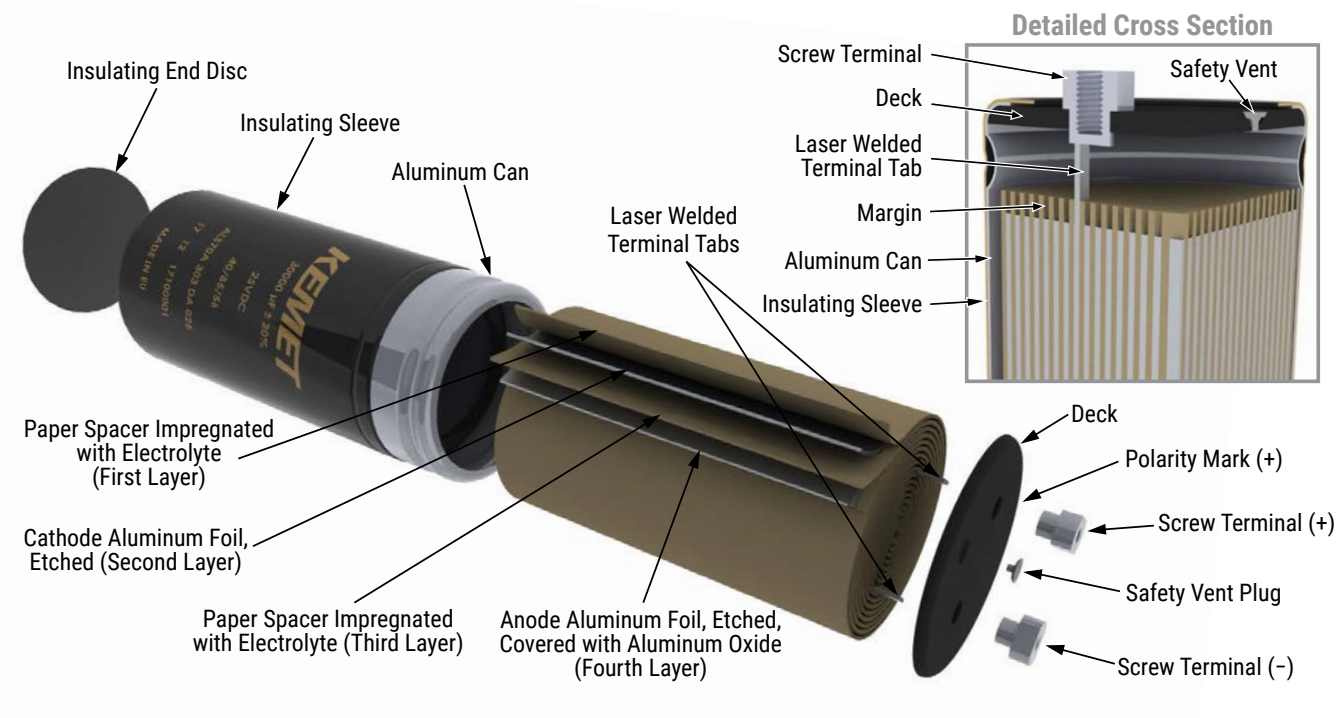

Construction Data

The manufacturing process begins with the anode foil being electrochemically etched to increase the surface area and then "formed" to produce the aluminum oxide layer. Both the anode and cathode foils are then interleaved with absorbent paper and wound into a cylinder. During the winding process, aluminum tabs are attached to each foil to provide the electrical contact.

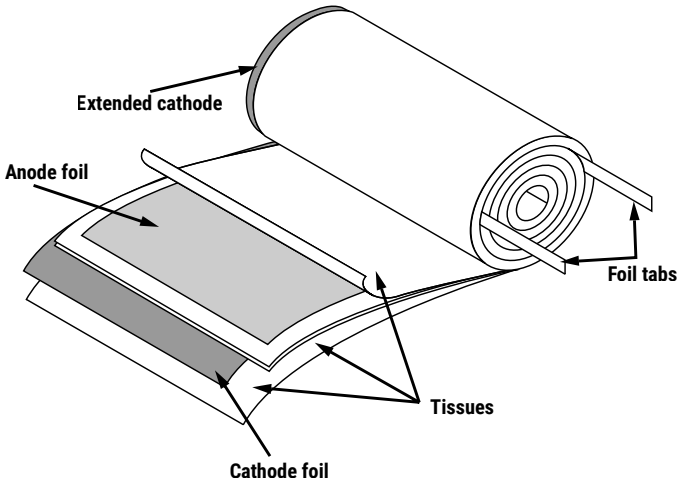

The deck, complete with terminals, is attached to the tabs and then folded down to rest on top of the winding. The complete winding is impregnated with electrolyte before being housed in a suitable container, usually an aluminum can, and sealed. Throughout the process, all materials inside the housing must be maintained at the highest purity and be compatible with the electrolyte.

Each capacitor is aged and tested before being sleeved and packed. The purpose of aging is to repair any damage in the oxide layer and thus reduce the leakage current to a very low level. Aging is normally carried out at the rated temperature of the capacitor and is accomplished by applying voltage to the device while carefully controlling the supply current. The process may take several hours to complete.

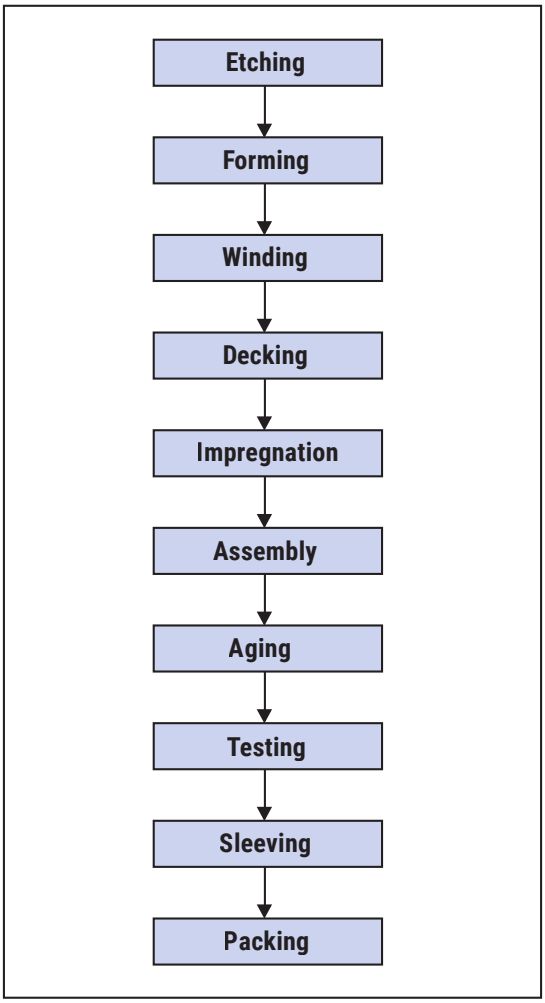

Damage to the oxide layer can occur due to variety of reasons:
- Slitting of the anode foil after forming
- Attaching the tabs to the anode foil
- Minor mechanical damage caused during winding

A sample from each batch is taken by the quality department after completion of the production process. This sample size is controlled by the use of recognized sampling tables defined in BS 6001.

The following tests are applied and may be varied at the request of the customer. In this case the batch, or special procedure, will determine the course of action.

Electrical:
- Leakage current
- Capacitance
- ESR
- Impedance
- Tan Delta

Mechanical/Visual:
- Overall dimensions
- Torque test of mounting stud
- Print detail
- Box labels
- Packaging, including packed quantity

KEMET Electronic Corporation Sales Offices

For a complete list of our global sales offices, please visit www.kemet.com/sales.

Disclaimer

All product specifications, statements, information and data (collectively, the "Information") in this datasheet are subject to change. The customer is responsible for checking and verifying the extent to which the Information contained in this publication is applicable to an order at the time the order is placed.

All Information given herein is believed to be accurate and reliable, but it is presented without guarantee, warranty, or responsibility of any kind, expressed or implied.

Statements of suitability for certain applications are based on KEMET Electronics Corporation's ("KEMET") knowledge of typical operating conditions for such applications, but are not intended to constitute – and KEMET specifically disclaims – any warranty concerning suitability for a specific customer application or use. The Information is intended for use only by customers who have the requisite experience and capability to determine the correct products for their application. Any technical advice inferred from this Information or otherwise provided by KEMET with reference to the use of KEMET's products is given gratis, and KEMET assumes no obligation or liability for the advice given or results obtained.

Although KEMET designs and manufactures its products to the most stringent quality and safety standards, given the current state of the art, isolated component failures may still occur. Accordingly, customer applications which require a high degree of reliability or safety should employ suitable designs or other safeguards (such as installation of protective circuitry or redundancies) in order to ensure that the failure of an electrical component does not result in a risk of personal injury or property damage.

Although all product–related warnings, cautions and notes must be observed, the customer should not assume that all safety measures are indicted or that other measures may not be required.

KEMET is a registered trademark of KEMET Electronics Corporation.

Общество с ограниченной ответственностью «МосЧип» ИНН 7719860671 / КПП 771901001
Адрес: 105318, г.Москва, ул.Щербаковская д.3, офис 1107

Данный компонент на территории Российской Федерации

Вы можете приобрести в компании MosChip.

Для оперативного оформления запроса Вам необходимо перейти по данной ссылке:

http://moschip.ru/get-element

Вы можете разместить у нас заказ для любого Вашего проекта, будь то серийное производство или разработка единичного прибора.

В нашем ассортименте представлены ведущие мировые производители активных и пассивных электронных компонентов.

Нашей специализацией является поставка электронной компонентной базы двойного назначения, продукции таких производителей как XILINX, Intel (ex.ALTERA), Vicor, Microchip, Texas Instruments, Analog Devices, Mini-Circuits, Amphenol, Glenair.

Сотрудничество с глобальными дистрибьюторами электронных компонентов, предоставляет возможность заказывать и получать с международных складов практически любой перечень компонентов в оптимальные для Вас сроки.

На всех этапах разработки и производства наши партнеры могут получить квалифицированную поддержку опытных инженеров.

Система менеджмента качества компании отвечает требованиям в соответствии с ГОСТ Р ИСО 9001, ГОСТ РВ 0015-002 и ЭС РД 009

Офис по работе с юридическими лицами:

105318, г.Москва, ул.Щербаковская д.3, офис 1107, 1118, ДЦ «Щербаковский»

Телефон: +7 495 668-12-70 (многоканальный)

Факс: +7 495 668-12-70 (доб.304)

E-mail: info@moschip.ru

Skype отдела продаж:
moschip.ru
moschip.ru_4
moschip.ru_6
moschip.ru_9