# NCP3712ASN, SZNCP3712ASN

# Over Voltage Protected High Side Switch

This switch is primarily intended to protect loads from transients by isolating the load from the transient energy rather than absorbing it.

**Features**

- Capable of Switching Loads of up to 200 mA without External Rboost
- Switch Shuts Off in Response to an Over Voltage Input Transient
- Features Active Turn Off for Fast Input Transient Protection
- Flexible Over Voltage Protection Threshold Set with External Zener
- Automatic Recovery after Transient Decays Below Threshold
- Withstands Input Transients up to 105 V Peak
- Guaranteed Off State with $\overline{\text{Enbl}}$ Input
- ESD Resistant in Accordance with the 2000 V Human Body Model
- Extremely Low Saturation Voltage
- SZ Prefix for Automotive and Other Applications Requiring Unique Site and Control Change Requirements; AEC−Q101 Qualified and PPAP Capable
- These are Pb−Free Devices

**Applications Include:**

- High Voltage Transient Isolation
- Power Switching to Electronic Modules
- DC Power Distribution in Line Operated Equipment
- Buffering Sensitive Circuits from Poorly Regulated Power Supplies
- Pre−conditioning of Voltage Regulator Input Voltage

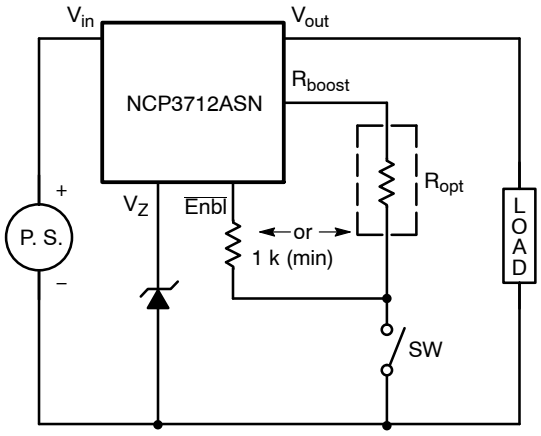


**Figure 1. Typical Application Circuit**

**ON Semiconductor®**

**http://onsemi.com**

**MARKING DIAGRAM**

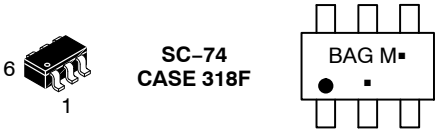


BAG = Device Code
M = Date Code
▪ = Pb−Free Package
(Note: Microdot may be in either location)

**INTERNAL CIRCUIT DIAGRAM/ PIN CONFIGURATION**

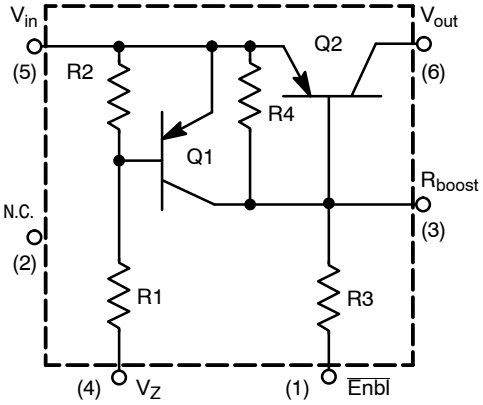


**ORDERING INFORMATION**

| Device | Package | Shipping† |
|---|---|---|
| NCP3712ASNT1G<br>SZNCP3712ASNT1G | SC−74<br>(Pb−Free) | 3000 / Tape & Reel |
| NCP3712ASNT3G<br>SZNCP3712ASNT3G | SC−74<br>(Pb−Free) | 10,000 / Tape & Reel |

†For information on tape and reel specifications, including part orientation and tape sizes, please refer to our Tape and Reel Packaging Specifications Brochure, BRD8011/D.

© Semiconductor Components Industries, LLC, 2012

**MAXIMUM RATINGS** ($T_J$ = 25°C unless otherwise noted) (Note 1)

| Rating | Symbol | Value | Unit |
|---|---|---|---|
| Input−to−Output Voltage | $V_{io}$ | 105 | V |
| Reverse Input−to−Vz. Voltage | $V_{in(rev)}$ | −9.0 | V |
| Reverse Input−to−Rboost Voltage | $V_{in(rev)}$ | −5.0 | V |
| Output Load Current − Continuous | $I_{load}$ | −300 | mA |
| Enbl Input Current − Continuous | $I_{enbl}$ | 5.0 | mA |
| Vz Input Current − Continuous | $I_z$ | 3.0 | mA |
| Rboost Input Current − Continuous | $I_{boost}$ | 10 | mA |
| Junction Temperature | $T_J$ | 125 | °C |
| Operating Ambient Temperature Range | $T_A$ | −40 to +85 | °C |
| Storage Temperature Range | $T_{stg}$ | −65 to +150 | °C |
| Device Power Dissipation (Minimum Footprint) | $P_D$ | 300 | mW |
| Derate Above 25°C | − | 2.4 | mW/°C |
| Latchup Performance: Positive<br>Negative | $I_{Latchup}$ | 200<br>200 | mA |

Stresses exceeding Maximum Ratings may damage the device. Maximum Ratings are stress ratings only. Functional operation above the Recommended Operating Conditions is not implied. Extended exposure to stresses above the Recommended Operating Conditions may affect device reliability.

1. This device contains ESD protection and exceeds the following tests:
   Human Body Model 1500 V per MIL−STD−883, Method 3015.
   Machine Model Method 150 V.

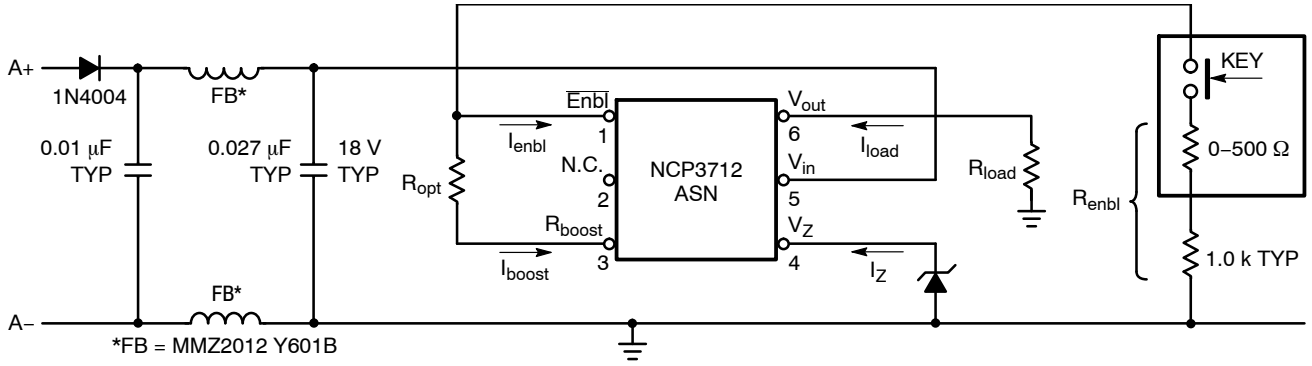


**Figure 2. Typical Applications Circuit for Load Dump Transient Protection**

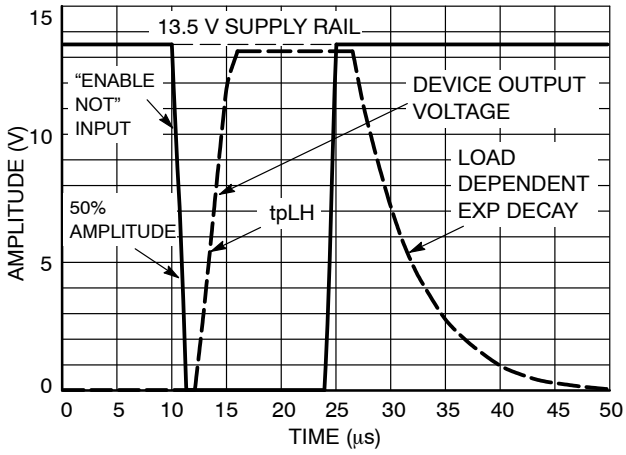


**Figure 3. Enable NOT Switching Waveforms**

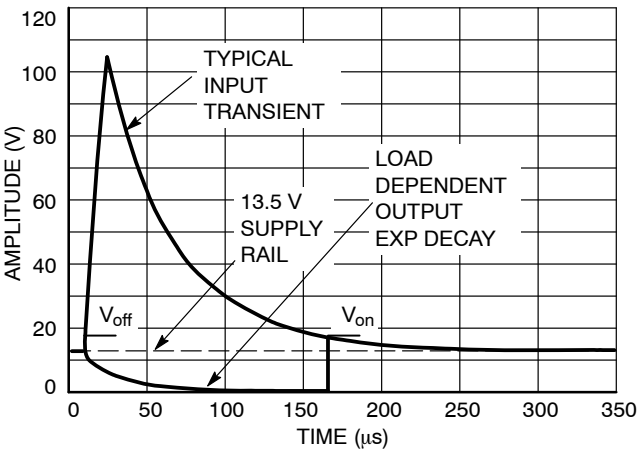


**Figure 4. Load Dump Waveforms**

**ELECTRICAL CHARACTERISTICS** ($V_{in}$ = 12.5 $V_{DC}$ Ref to Gnd, $T_A$ = 25°C unless otherwise noted.)

| Characteristic | Symbol | Min | Typ | Max | Unit |
|---|---|---|---|---|---|
| **OFF CHARACTERISTICS** | | | | | |
| Input−Output Breakdown Voltage (@ $I_{out}$ = 200 μA) | $V_{(BRio)}$ | 105 | – | – | Vdc |
| Output Reverse Breakdown Voltage (@ $I_{out}$ = −1.0 mA Pulse) | $V_{(-BRout)}$ | – | −0.7 | – | Vdc |
| Output Leakage Current ($V_{in}$ = $V_{enbl}$ = 30 V, $T_A$ = 25°C) | $I_{load(off)}$ | – | – | −100 | μAdc |
| Guaranteed “Off” State “ENBL NOT” Voltage ($I_O$ ≤ 100 μA) | $V_{enbl(off)}$ | 13 | – | – | Vdc |
| Required “Off” State $I_z$ Current ($R_{load}$ = 100 Ω) | $I_{z(off)}$ | 150 | – | – | μAdc |
| $V_{in(off)}$ ($V_z$ = 16 V, $I_{load}$ = 100 mA, $R_{enbl}$ = 1500 Ω) | $V_{off}$ | 15.5 | – | 18.7 | Vdc |
| **ON CHARACTERISTICS** | | | | | |
| Input−Output On Voltage ($I_o$ = 100 mA, $I_{enbl}$ = −3.0 mA) | $V_{io(on)}$ | – | 0.2 | 0.5 | Vdc |
| Output Load Current — Continuous<br>($I_{enbl}$ = −3.0 mA, $V_{io(on)}$ = 0.5 Vdc)<br>($I_{boost}$ = −9.0 mA, $V_{io(on)}$ = 0.5 Vdc)<br>($I_{boost}$ = −9.0 mA, $V_{io(on)}$ = 0.6 Vdc) | $I_{o(on)}$ | <br>–<br>–<br>– | <br>–<br>–<br>– | <br>−200<br>−200<br>−300 | mAdc |
| $V_{in(on)}$ ($V_z$ = 16 V, $I_{load}$ = 100 mA, $R_{enbl}$ = 1500 Ω) | $V_{on}$ | 8.5 | – | 10.5 | Vdc |
| “ENBL NOT” Input Current ($I_o$ = 100 mA, $V_{io(on)}$ = 0.35 Vdc, $R_{enbl}$ = 1500 Ω) | $I_{enbl}$ | – | – | −1.0 | mAdc |
| **SWITCHING CHARACTERISTICS** | | | | | |
| Propagation Delay Time:<br>Hi to Lo Prop Delay; Fig. 3 ($V_{in}$ = $V_{enbl}$ = 13.5 V)<br>Lo to Hi Prop Delay; Fig. 3 ($V_{in}$ = 13.5 V, $V_{enbl}$ = 0 V) | <br>$t_{PHL}$<br>$t_{PLH}$ | <br>–<br>– | <br>1.5<br>1.5 | <br>–<br>– | μS |
| Transition Times:<br>Fall Time; Fig. 4 ($V_{in}$ = $V_{enbl}$ = 13.5 V)<br>Rise Time; Fig. 4 ($V_{in}$ = $V_{enbl}$ = 0 V) | <br>$t_f$<br>$t_r$ | <br>–<br>– | <br>75<br>400 | <br>–<br>– | ηS |
| **INTERNAL RESISTORS** | | | | | |
| Input Leakage Resistor | R2 | 7.0 | 10 | 13 | kΩ |
| Input Resistor | R1 | 3.3 | 4.7 | 6.1 | kΩ |
| Output Leakage Resistor | R4 | 1.4 | 2.4 | 3.2 | kΩ |
| Enable Input Resistor | R3 | 1.4 | 2.4 | 3.2 | kΩ |

## PACKAGE DIMENSIONS

**SC−74**
CASE 318F−05
ISSUE M

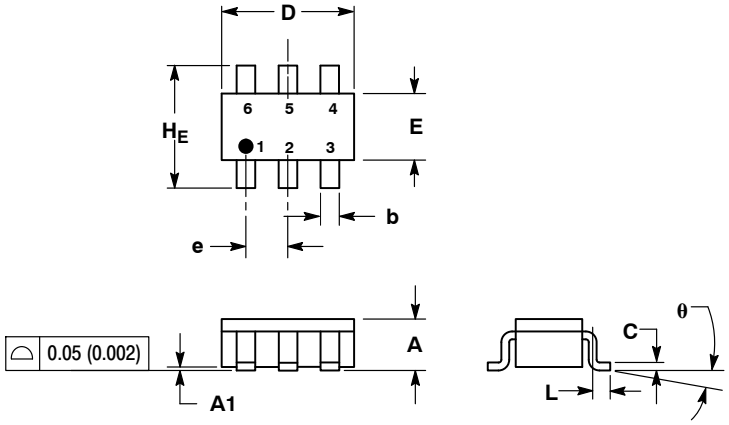


NOTES:
1. DIMENSIONING AND TOLERANCING PER ANSI Y14.5M, 1982.
2. CONTROLLING DIMENSION: INCH.
3. MAXIMUM LEAD THICKNESS INCLUDES LEAD FINISH THICKNESS. MINIMUM LEAD THICKNESS IS THE MINIMUM THICKNESS OF BASE MATERIAL.
4. 318F−01, −02, −03, −04 OBSOLETE. NEW STANDARD 318F−05.

| | MILLIMETERS | | | INCHES | | |
|---|---|---|---|---|---|---|
| DIM | MIN | NOM | MAX | MIN | NOM | MAX |
| A | 0.90 | 1.00 | 1.10 | 0.035 | 0.039 | 0.043 |
| A1 | 0.01 | 0.06 | 0.10 | 0.001 | 0.002 | 0.004 |
| b | 0.25 | 0.37 | 0.50 | 0.010 | 0.015 | 0.020 |
| c | 0.10 | 0.18 | 0.26 | 0.004 | 0.007 | 0.010 |
| D | 2.90 | 3.00 | 3.10 | 0.114 | 0.118 | 0.122 |
| E | 1.30 | 1.50 | 1.70 | 0.051 | 0.059 | 0.067 |
| e | 0.85 | 0.95 | 1.05 | 0.034 | 0.037 | 0.041 |
| L | 0.20 | 0.40 | 0.60 | 0.008 | 0.016 | 0.024 |
| $H_E$ | 2.50 | 2.75 | 3.00 | 0.099 | 0.108 | 0.118 |
| θ | 0° | – | 10° | 0° | – | 10° |

## SOLDERING FOOTPRINT*

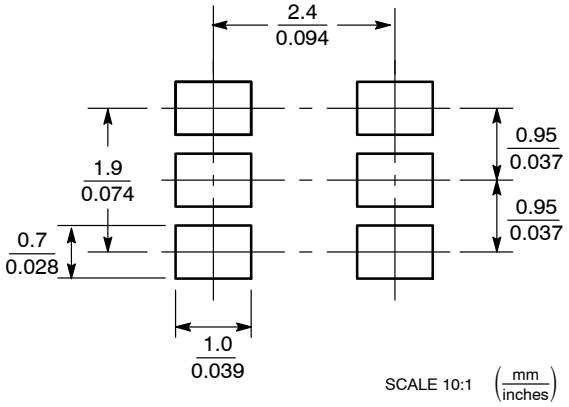


*For additional information on our Pb−Free strategy and soldering details, please download the ON Semiconductor Soldering and Mounting Techniques Reference Manual, SOLDERRM/D.

**ON Semiconductor** and ON are registered trademarks of Semiconductor Components Industries, LLC (SCILLC). SCILLC reserves the right to make changes without further notice to any products herein. SCILLC makes no warranty, representation or guarantee regarding the suitability of its products for any particular purpose, nor does SCILLC assume any liability arising out of the application or use of any product or circuit, and specifically disclaims any and all liability, including without limitation special, consequential or incidental damages. “Typical” parameters which may be provided in SCILLC data sheets and/or specifications can and do vary in different applications and actual performance may vary over time. All operating parameters, including “Typicals” must be validated for each customer application by customer’s technical experts. SCILLC does not convey any license under its patent rights nor the rights of others. SCILLC products are not designed, intended, or authorized for use as components in systems intended for surgical implant into the body, or other applications intended to support or sustain life, or for any other application in which the failure of the SCILLC product could create a situation where personal injury or death may occur. Should Buyer purchase or use SCILLC products for any such unintended or unauthorized application, Buyer shall indemnify and hold SCILLC and its officers, employees, subsidiaries, affiliates, and distributors harmless against all claims, costs, damages, and expenses, and reasonable attorney fees arising out of, directly or indirectly, any claim of personal injury or death associated with such unintended or unauthorized use, even if such claim alleges that SCILLC was negligent regarding the design or manufacture of the part. SCILLC is an Equal Opportunity/Affirmative Action Employer. This literature is subject to all applicable copyright laws and is not for resale in any manner.

**PUBLICATION ORDERING INFORMATION**

**LITERATURE FULFILLMENT**:
Literature Distribution Center for ON Semiconductor
P.O. Box 5163, Denver, Colorado 80217 USA
**Phone**: 303−675−2175 or 800−344−3860 Toll Free USA/Canada
**Fax**: 303−675−2176 or 800−344−3867 Toll Free USA/Canada
**Email**: orderlit@onsemi.com

**N. American Technical Support**: 800−282−9855 Toll Free USA/Canada
**Europe, Middle East and Africa Technical Support:**
Phone: 421 33 790 2910
**Japan Customer Focus Center**
Phone: 81−3−5817−1050

**ON Semiconductor Website**: **www.onsemi.com**

**Order Literature**: http://www.onsemi.com/orderlit

For additional information, please contact your local Sales Representative

Общество с ограниченной ответственностью «МосЧип» ИНН 7719860671 / КПП 771901001
Адрес: 105318, г.Москва, ул.Щербаковская д.3, офис 1107

**Данный компонент на территории Российской Федерации**

**Вы можете приобрести в компании MosChip.**

Для оперативного оформления запроса Вам необходимо перейти по данной ссылке:

http://moschip.ru/get-element

Вы можете разместить у нас заказ для любого Вашего проекта, будь то серийное производство или разработка единичного прибора.

В нашем ассортименте представлены ведущие мировые производители активных и пассивных электронных компонентов.

Нашей специализацией является поставка электронной компонентной базы двойного назначения, продукции таких производителей как XILINX, Intel (ex.ALTERA), Vicor, Microchip, Texas Instruments, Analog Devices, Mini-Circuits, Amphenol, Glenair.

Сотрудничество с глобальными дистрибьюторами электронных компонентов, предоставляет возможность заказывать и получать с международных складов практически любой перечень компонентов в оптимальные для Вас сроки.

На всех этапах разработки и производства наши партнеры могут получить квалифицированную поддержку опытных инженеров.

Система менеджмента качества компании отвечает требованиям в соответствии с ГОСТ Р ИСО 9001, ГОСТ РВ 0015-002 и ЭС РД 009

**Офис по работе с юридическими лицами:**

105318, г.Москва, ул.Щербаковская д.3, офис 1107, 1118, ДЦ «Щербаковский»

Телефон: +7 495 668-12-70 (многоканальный)

Факс: +7 495 668-12-70 (доб.304)

E-mail: info@moschip.ru

Skype отдела продаж:
moschip.ru
moschip.ru_4
moschip.ru_6
moschip.ru_9