THIS DRAWING IS UNPUBLISHED. RELEASED FOR PUBLICATION 20
© COPYRIGHT 20 BY TYCO ELECTRONICS CORPORATION. ALL RIGHTS RESERVED.

| SET UP GAUGE 2119599-1 | LOC | DIST |
|---|---|---|
| | A | 66 |

REVISIONS

| P | LTR | DESCRIPTION | DATE | DWN | APVD |
|---|---|---|---|---|---|
| | E | ECR-15-009844 | 30JUN2015 | LG | GB |

ATLANTIC VERSION TERMINATOR INTERFACE ADAPTER

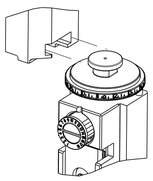

| PART NUMBER | REVISION | DESCRIPTION | FEED TYPE |
|---|---|---|---|
| 2151068-1 | E | FINE CRIMP HEIGHT ADJUST | MECHANICAL |
| 2151068-2 | E | FINE CRIMP HEIGHT ADJUST | PNEUMATIC |
| 2151068-5 | E | FINE CRIMP HEIGHT ADJUST | SERVO LATCH PLATE 4 |
| 2151068-6 | E | NON-CRIMP HEIGHT ADJUST | SERVO 4 LATCH PLATE 12 |
| 2151068-7 | E | FINE CRIMP HEIGHT ADJUST | NONE |
| 7-2151068-7 | D | CRIMP TOOLING KIT | - |

APPLICATOR STYLE CONVERSION CHART

| CONVERT TO | PART NUMBERS REQUIRED | | | | | |
|---|---|---|---|---|---|---|
| PNEUMATIC FEED | 2119950-1 | 1338685-1 | 5-18022-5 | 2119641-1 | 2119799-1 | 2063440-1 |
| SERVO LATCH PLATE | 2119951-1 | - | 8-2151068-5 | 1901094-3 | 1-1752354-8 | 2168400-6 (QUANTITY 2) |
| SMART APPLICATOR | 2161326-1 | - | 8-2151068-4 | - | - | - |
| MECHANICAL FEED | 2119949-1 | 1338685-1 | 5-18022-5 | 2119653-1 | - | - |
| SERVO LATCH PLATE | 2119951-1 | - | 8-2151068-5 | 1901094-3 | 1-1752354-8 | 2168400-6 (QUANTITY 2) |
| SMART APPLICATOR | 2161326-1 | - | 8-2151068-4 | - | - | - |
| MECHANICAL FEED | 2119949-1 | 1338685-1 | 5-18022-5 | 2119653-1 | - | - |
| PNEUMATIC FEED | 2119950-1 | 1338685-1 | 5-18022-5 | 2119641-1 | 2119799-1 | 2063440-1 |
| - | - | - | - | - | - | - |
| - | - | - | - | - | - | - |
| - | - | - | - | - | - | - |
| - | - | - | - | - | - | - |
| - | - | - | - | - | - | - |

APPLICATOR DATA

| CRIMP | SIZE | TYPE |
|---|---|---|
| WIRE | 1.57 mm [.062] | F |
| INSUL | 1.83 mm [.072] | BX |

APPLICATOR INSTRUCTIONS 408-10389

TERMINAL DATA: TE TERMINAL — TE CRIMP SPECIFICATION

TERMINAL NAME: MCON-1.2 CB

| WIRE STRIP LENGTH | INSULATION DIAMETER RANGE |
|---|---|
| 3.00-3.60 mm [.118-.142 IN] | ∅1.40-1.90 mm [.055-.075 IN] |

| TERMINAL APPLICATION SPECIFICATION | | | |
|---|---|---|---|
| | 114-18464 13 | - | - |
| | - | - | - |

TERMINALS APPLIED

| TE TERMINAL | TE TERMINAL | TE TERMINAL | TE TERMINAL |
|---|---|---|---|
| 1670144-1 | 1670144-2 | 1670144-3 | |

| WIRE SIZE | CRIMP HEIGHT mm [INCH] | CRIMP HEIGHT REFERENCE SETTING 9 |
|---|---|---|
| 0.75mm2 | 0.95+/-0.03 [.037+/-.001] | 8.9 |
| 20 AWG OR 0.50mm2 | 0.84+/-0.03 [.033+/-.001] | 10.2 |

1. RECOMMENDED SPARE PARTS

2. GREASE BEARING SURFACES LIGHTLY

3. LUBRICATE DAILY PER THE APPLICATOR INSTRUCTION SHEET SUPPLIED WITH THE APPLICATOR.

4. APPLICATOR SPECIFIC DATA TO BE ENTERED INTO BLANK MEMORY CHIP AT ASSEMBLY. SEE BELOW FOR PART NUMBER:
   MECHANICAL FEED WITH "SMART APPLICATOR" CONVERSION: 8-2151068-4
   PNEUMATIC FEED WITH "SMART APPLICATOR" CONVERSION: 8-2151068-4
   SERVO FEED WITH "FINE CRIMP HEIGHT ADJUST": 8-2151068-5
   SERVO FEED WITH "NON-CRIMP HEIGHT ADJUST": 8-2151068-6

5. ADJUSTMENT OF THE STRIPPER MAY BE REQUIRED WHEN MOVING THE APPLICATOR BETWEEN BENCH AND LEADMAKER APPLICATIONS.

6. APPLY PART NUMBER 1-23419-5 LOCTITE TO THREADS OF ITEM 62. APPLY PART NUMBER 2-23419-6 LOCTITE TO THREADS OF ITEMS 242. FOR -6 ONLY APPLY PART NUMBER 1-23419-5 LOCTITE TO THREADS OF ITEM 37.

7. GREASE THREADS, GROOVE AND O-RING ON ITEMS 35 & 252.

8. MAGNET, ITEM 166 MUST BE ORIENTED CORRECTLY IN ORDER TO PROPERLY ACTUATE THE COUNTER.

9. CRIMP HEIGHT REFERENCE SETTING WAS THE SETTING USED WHEN THE APPLICATOR WAS QUALIFIED AT THE FACTORY. ADJUSTMENT MAY BE NECESSARY WHEN RUNNING APPLICATOR IN THE FIELD.

10. SPARE FEED CAM STORAGE LOCATION REFER TO INSTRUCTION SHEET FOR ADDITIONAL INFORMATION.

11. TO CONVERT THE APPLICATOR TO A NON-CARRIER CUTTING STYLE, REMOVE ITEM 13 AND ATTACH TO THE LOCATION ON THE BACK SIDE OF THE HOUSING. REFER TO INSTRUCTION SHEET FOR ADDITIONAL INFORMATION.

12. WHEN ASSEMBLING A NON CRIMP HEIGHT ADJUST APPLICATOR (-6) USE SHIMS FROM ITEM 260 TO ACHIEVE A NOMINAL SHIM HEIGHT OF 4.85.

13. MAXIMUM CRIMP WIDTH 2.05mm & MAXIMUM INSULATION CRIMP HEIGHT 2.05mm. SEE APPLICATION SPECIFICATION TO CLARIFY.

*WARNING
ON INSTALLATION, SET WIRE DISC, ITEM 40 TO LARGEST WIRE SIZE SETTING. USE OF SETTINGS BELOW MINIMUM REQUIRED CRIMP HEIGHT SETTING WILL CAUSE DAMAGE TO CRIMP TOOLING.

| -77 | -7 | -6 | -5 | -2 | -1 | PART NO | DESCRIPTION | ITEM NO |
|---|---|---|---|---|---|---|---|---|
| - | - | 1 | - | - | - | 2119957-2 | APPLICATOR SHIM PACK | 260 |
| - | 1 | - | 1 | 1 | 1 | 8-21084-0 | O-RING, .676 ID, .070 DIA. MAT. | 252 |
| - | - | - | - | 1 | - | 2119640-1 | PUSH ROD, AIR FEED | 250 |
| - | - | - | - | 1 | - | 2079988-1 | BUSHING, LCH5-12, MISUMI | 249 |

| -77 | -7 | -6 | -5 | -2 | -1 | PART NO | DESCRIPTION | ITEM NO |
|---|---|---|---|---|---|---|---|---|
| - | - | - | - | 1 | - | 2119641-1 | FEED CAM, AIR FEED | 248 |
| - | 1 | - | 1 | 1 | 1 | 2119798-1 | DETENT PIN | 247 |
| - | 1 | - | 1 | 1 | 1 | 1-22279-3 | SPRING, COMPRESSION | 246 |
| - | - | 1 | - | - | - | 2119758-1 | RAM, AMP STYLE, SIDE FEED, NON-ADJ. | 245 |
| - | 1 | 1 | 1 | 1 | 1 | 2119082-4 | CAM, SNAIL, INSULATION ADJUSTMENT | 244 |
| - | 1 | 1 | 1 | 1 | 1 | 2079764-1 | WASHER, WAVE SPRING, CREST-TO-CREST | 243 |
| 6 - | 1 | 1 | 1 | 1 | 1 | 2119083-1 | RETAINER, INSULATION DIAL | 242 |
| - | 1 | 1 | 1 | 1 | 1 | 7-18023-7 | SCR, SKT HD CAP M3 X 4.0 | 241 |
| - | - | 2 | 2 | - | - | 2168400-6 | SHCS, LOW HEAD, RoHS, M5 X 16 | 240 |
| - | - | - | - | - | 1 | 2119580-1 | MECHANICAL FEED ASSEMBLY | 239 |
| - | - | - | - | 1 | - | 2063440-1 | AIR FEED MODULE | 238 |
| - | - | 1 | 1 | - | - | 2119740-2 | TAG,IDENTIFICATION | 213 |
| - | - | 1 | 1 | - | - | 1901094-3 | SPACER, FEEDER | 198 |
| - | - | - | - | 2 | - | 21045-3 | RING, RETAIN, EXTERN, 3/16 CRESCENT | 172 |
| - | 1 | 1 | 1 | 1 | 1 | 994969-1 | MAGNET, RARE EARTH HIGH ENERGY | 166 |
| - | REF | REF | REF | REF | REF | 994970-2 | COUNTER, MAGNETIC | 164 |
| - | - | - | - | 1 | - | 240638-1 | SPRING, FEED FINGER | 163 |
| - | - | - | - | 1 | - | 3-23627-7 | PIN, RETAIN, GRVD, 3/16 X .854 | 137 |
| - | - | - | - | 1 | - | 2119799-1 | HOLDER,FEED FINGER, AF | 136 |
| - | - | REF | REF | - | - | SEE NOTE 4 | MEMORY CHIP, PROGRAMMED | 135 |
| - | - | 1 | 1 | - | - | 1633743-1 | SERVO FEED LATCH ASM | 133 |
| - | 1 | 1 | 1 | 1 | 1 | 1-18028-2 | WASHER, FLAT, REG M4 | 119 |
| - | - | REF | REF | - | - | 2119944-1 | FEED FINGER ASSEMBLY,SF | 117 |
| - | 1 | 1 | 1 | 1 | 1 | 455888-4 | SPACER, CRIMPER | 82 |
| - | 2 | 2 | 2 | 2 | 2 | 1-2079383-0 | SCR, BHSC, RoHS (M3 X 6) | 79 |
| - | 1 | 1 | 1 | 1 | 1 | 1633782-2 | FENCE | 78 |
| - | 1 | 1 | 1 | 1 | 1 | 2119956-1 | DOCUMENTATION PACKAGE | 71 |
| - | 1 | 1 | 1 | 1 | 1 | 2119791-5 | DEPRESSOR, WIRE | 70 |
| - | 1 | - | - | 1 | 1 | 2119740-1 | TAG,IDENTIFICATION | 67 |
| - | 2 | 2 | 2 | 2 | 2 | 2168078-1 | SCREW, DRIVE, RH, RoHS, 2 x .188 | 66 |
| - | 1 | - | 1 | 1 | 1 | 2119793-1 | LIMITER, ADJUSTMENT BOLT | 63 |
| 6 - | 3 | - | 3 | 3 | 3 | 992763-5 | SCR, SET, SOC, CONE POINT, M3 x 4.0 | 62 |
| - | 1 | 1 | 1 | 1 | 1 | 2079383-4 | SCR, BHSC, RoHS (M4 X 8) | 60 |
| - | - | - | - | 1 | 1 | 5-18022-5 | SCR, HEX HD CAP, M4 X 6.0 | 59 |
| - | - | - | - | 1 | 1 | 1338685-1 | PAWL, FEED | 56 |
| - | 4 | 4 | 4 | 4 | 4 | 2168400-1 | SHCS, LOW HEAD, RoHS, M4 X 12 | 54 |
| - | 2 | 2 | 2 | 2 | 2 | 1-2168083-0 | SCR, SKT HD CAP, RoHS, M4 X 10 | 53 |
| - | 1 | 1 | 1 | 1 | 1 | 5018030-1 | NUT, HEX, REG, RoHS, M3 | 52 |
| - | 1 | 1 | 1 | 1 | 1 | 811242-5 | BUMPER, HOLD DOWN | 51 |
| - | 1 | 1 | 1 | 1 | 1 | 690753-2 | SPACER, TONKER | 50 |
| - | - | - | - | 1 | 2 | 18023-9 | SCR, SKT HD CAP M4 X 6.0 | 49 |
| - | - | - | - | - | 1 | 2119652-1 | FEED CAM, PRE FEED | 48 |
| - | - | - | - | - | 1 | 2119653-1 | FEED CAM, POST FEED | 47 |
| - | 1 | 1 | 1 | 1 | 1 | 2119656-9 | APPLICATOR BASIC ASSEMBLY, SF | 46 |
| - | 1 | - | 1 | 1 | 1 | 2119370-1 | RAM, AMP STYLE, SIDE FEED | 44 |
| - | 1 | 1 | 1 | 1 | 1 | 2079383-7 | SCR, BHSC, RoHS (M8 X 25) | 41 |
| - | 1 | - | 1 | 1 | 1 | 2119645-1 | DISC, NUMBERED FA WIRE ADJUSTMENT | 40 |
| - | 1 | - | 1 | 1 | 1 | 2119957-1 | APPLICATOR SHIM PACK | 39 |
| - | 1 | 1 | 1 | 1 | 1 | 2119644-1 | RAM WASHER, PRECISION | 38 |
| 6 - | 1 | 1 | 1 | 1 | 1 | 2119085-1 | FA HEAD, ATLANTIC STYLE | 37 |
| - | 1 | - | 1 | 1 | 1 | 2119092-1 | BOLT, ADJUSTMENT | 35 |
| - | 1 | 1 | 1 | 1 | 1 | 3-1752356-3 | SUPPORT, TERMINAL | 34 |
| - | 2 | 2 | 2 | 2 | 2 | 2079383-5 | SCR, BHSC, RoHS (M4 X 20) | 33 |
| - | 1 | 1 | 1 | 1 | 1 | 2161328-1 | HEX HEAD, FLANGED, M5 x 8mm LONG | 32 |
| - | 1 | 1 | 1 | 1 | 1 | 1320908-3 | SPACER, STRIP GUIDE | 30 |
| - | 1 | 1 | 1 | 1 | 1 | 2119959-2 | ASSEMBLY, STRIP GUIDE | 29 |
| - | 1 | 1 | 1 | 1 | 1 | 1320928-2 | STRIP GUIDE | 24 |
| - | 1 | 1 | 1 | 1 | 1 | 2168083-2 | SCR, SKT HD CAP, RoHS, M4 X 8.0 | 21 |
| - | 1 | 1 | 1 | 1 | 1 | 1-18028-2 | WASHER, FLAT, REG M4 | 20 |
| - | 1 | 1 | 1 | 1 | 1 | 2119533-1 | STRIPPER, SIDE FEED | 19 |
| 1 - | 1 | 1 | 1 | 1 | 1 | 2119806-1 | INSERT, SHEAR | 13 |
| - | 1 | 1 | 1 | 1 | 1 | 3-22280-3 | SPRING, COMPRESSION | 12 |
| - | 1 | 1 | 1 | 1 | 1 | 1-18023-1 | SCR, SKT HD CAP M4 X 10.0 | 11 |
| 1 - | 1 | 1 | 1 | 1 | 1 | 2119805-1 | SHEAR HOLDER, FRONT | 10 |
| 1 - | 1 | 1 | 1 | 1 | 1 | 1803095-6 | FLOATING SHEAR, FRONT | 9 |
| 1 1 | 1 | 1 | 1 | 1 | 1 | 1333231-2 | ANVIL, COMBINATION, SPECIAL | 8 |
| - | - | - | - | - | - | - | - | 7 |
| - | - | - | - | - | - | - | - | 6 |
| - | 1 | 1 | 1 | 1 | 1 | 2119757-8 | DEPRESSOR, SHEAR | 5 |
| - | 1 | 1 | 1 | 1 | 1 | 238011-2 | BLOCK, CRIMPER SPACER | 4 |
| 1 1 | 1 | 1 | 1 | 1 | 1 | 1-1633989-6 | CRIMPER, INSULATION, SPECIAL | 3 |
| - | 1 | 1 | 1 | 1 | 1 | 455888-1 | SPACER, CRIMPER | 2 |
| 1 1 | 1 | 1 | 1 | 1 | 1 | 5-456403-0 | CRIMPER, WIRE PREMIUM | 1 |

THIS DRAWING IS A CONTROLLED DOCUMENT FOR TYCO ELECTRONICS CORPORATION. IT IS SUBJECT TO CHANGE AND THE CONTROLLING ENGINEERING ORGANIZATION SHOULD BE CONTACTED FOR THE LATEST REVISION.

DIMENSIONS: mm

TOLERANCES UNLESS OTHERWISE SPECIFIED:
0 PLC ±-
1 PLC ±0.5
2 PLC ±0.13
3 PLC ±0.013
4 PLC ±0.0001
ANGLES ±-

MATERIAL - -
FINISH - -

| | | |
|---|---|---|
| DWN | R.KNEPPER | 21MAY2013 |
| CHK | G.BAILEY | 21MAY2013 |
| APVD | M.CLIFFORD | 21MAY2013 |
| PRODUCT SPEC | - | |
| APPLICATION SPEC | - | |
| WEIGHT | - | |

TE Connectivity
Harrisburg, PA 17105-3608

NAME: Ocean Side Feed Applicator -

| SIZE | CAGE CODE | DRAWING NO | RESTRICTED TO |
|---|---|---|---|
| A1 | 00779 | C-2151068 | - |

Customer Accessible Production Drawing | SCALE 1:2 | SHEET 1 OF 4 | REV E

# ATLANTIC VERSION

Shown on sheets 1 of 4 & 2 of 4
(Pacific version shown on sheets 3 of 4 & 4 of 4)

SHEETS 3 & 4 ARE NOT REQUIRED FOR ATLANTIC VERSION

THIS DRAWING IS UNPUBLISHED. RELEASED FOR PUBLICATION 20
© COPYRIGHT 20 BY TYCO ELECTRONICS CORPORATION. ALL RIGHTS RESERVED.

| LOC | DIST |
|---|---|
| A | 66 |

REVISIONS

| P | LTR | DESCRIPTION | DATE | DWN | APVD |
|---|---|---|---|---|---|
| | - | SEE SHEET 1 | - | - | - |

## FEED TYPE MECHANICAL

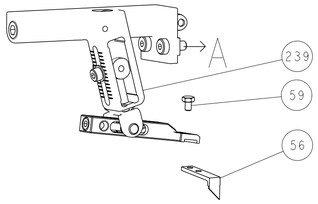


## PNEUMATIC

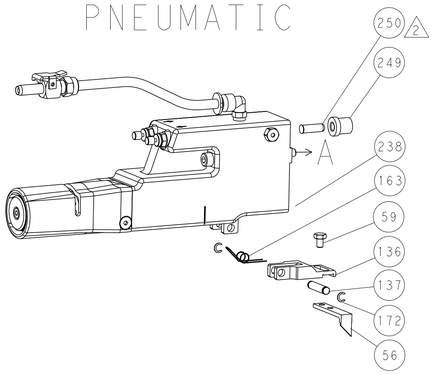


## SERVO LATCH PLATE

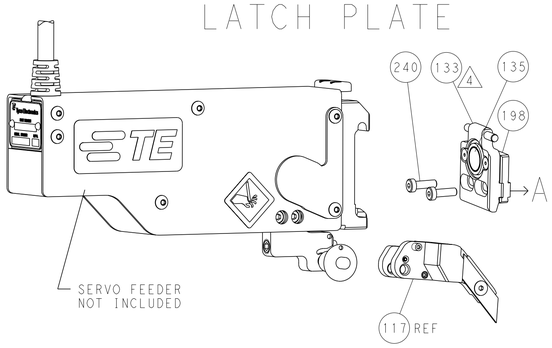


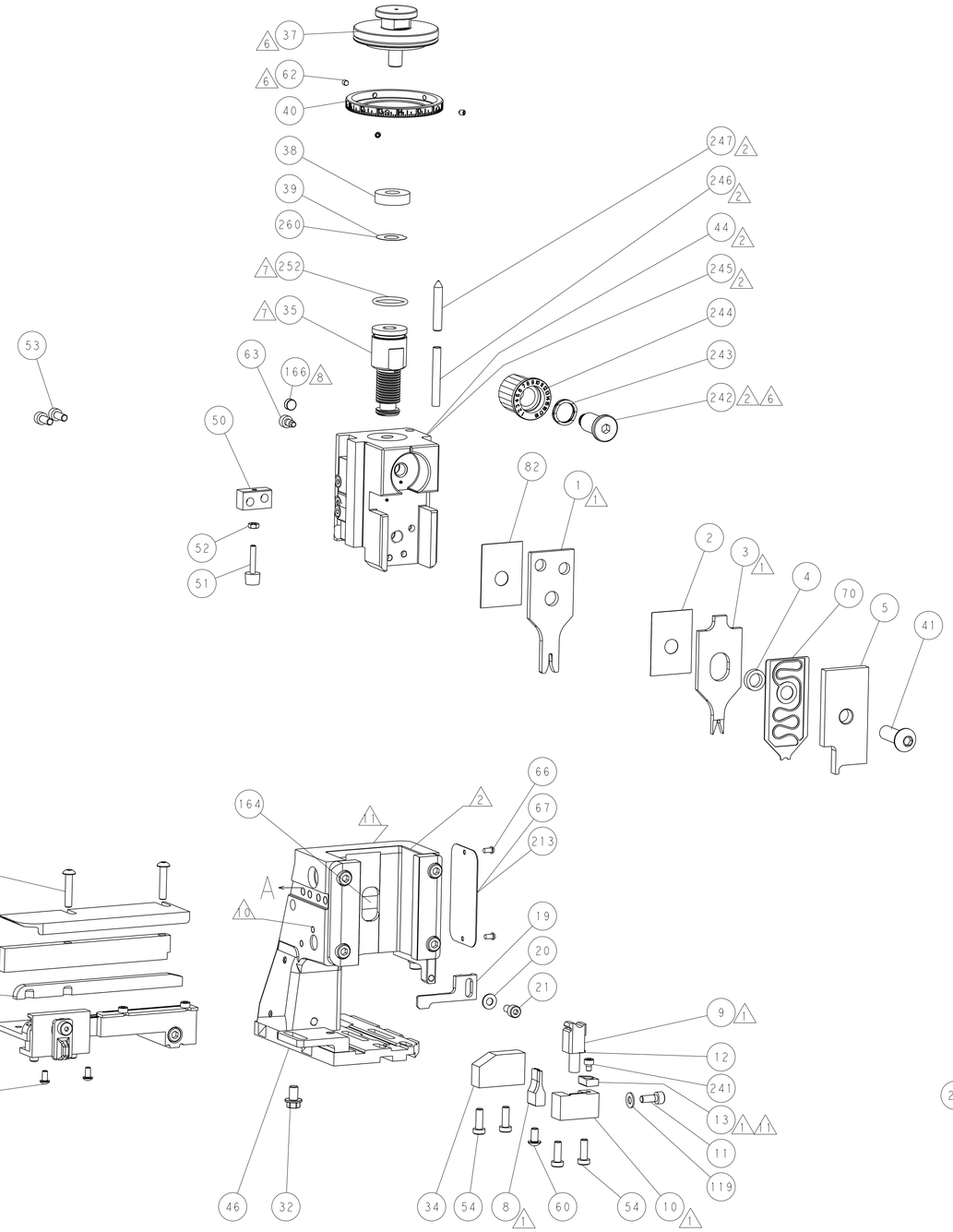


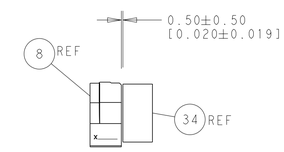


TERMINAL SUPPORT LOCATION

ITEM 30 LOCATED AT FRONT HOLES

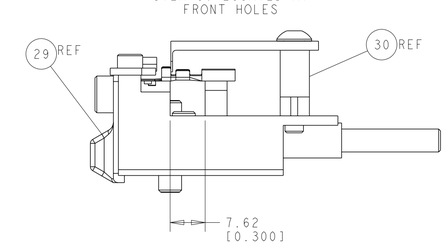


FEED TRACK POSITION
GUIDE BY INSULATION BARREL

## CAM POSITIONS

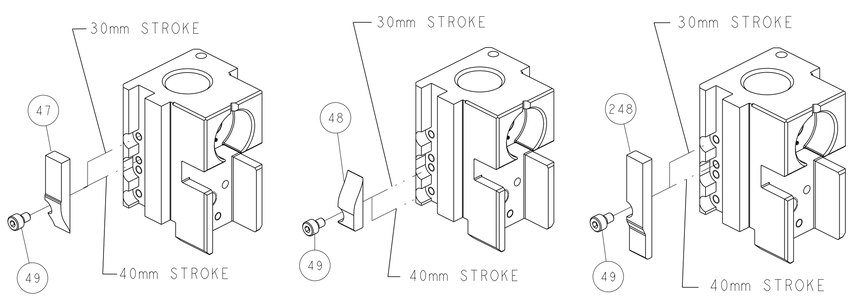


MECHANICAL POST FEED

MECHANICAL PRE FEED

AIR FEED

# ATLANTIC VERSION

Shown on sheets 1 of 4 & 2 of 4
(Pacific version shown on sheets 3 of 4 & 4 of 4)

THIS DRAWING IS A CONTROLLED DOCUMENT FOR TYCO ELECTRONICS CORPORATION. IT IS SUBJECT TO CHANGE AND SHOULD BE CONTACTED THE ENGINEERING ORGANIZATION SHOULD BE CONTACTED FOR THE LATEST REVISION.

DIMENSIONS: mm

TOLERANCES UNLESS OTHERWISE SPECIFIED:
0 PLC ±-
1 PLC ±0.5
2 PLC ±0.13
3 PLC ±0.013
4 PLC ±0.0001
ANGLES ±-

MATERIAL - -
FINISH - -

| | | |
|---|---|---|
| DWN | R.KNEPPER | 21MAY2013 |
| CHK | G.BAILEY | 21MAY2013 |
| APVD | M.CLIFFORD | 21MAY2013 |
| PRODUCT SPEC | - | |
| APPLICATION SPEC | - | |
| WEIGHT | - | |

TE Connectivity
Harrisburg, PA 17105-3608

NAME: Ocean Side Feed Applicator -

| SIZE | CAGE CODE | DRAWING NO | RESTRICTED TO |
|---|---|---|---|
| A1 | 00779 | C-2151068 | - |

Customer Accessible Production Drawing | SCALE 1:2 | SHEET 2 OF 4 | REV E

AMP 4805 REV 31MAR2000

SHEETS 3 & 4 ARE NOT REQUIRED FOR ATLANTIC VERSION

THIS DRAWING IS UNPUBLISHED. RELEASED FOR PUBLICATION 20
© COPYRIGHT 20 BY TYCO ELECTRONICS CORPORATION. ALL RIGHTS RESERVED.

| SET UP GAUGE 2119599-1 | LOC | DIST |
|---|---|---|
| | A | 66 |

REVISIONS

| P | LTR | DESCRIPTION | DATE | DWN | APVD |
|---|---|---|---|---|---|
| | - | SEE SHEET 1 | - | - | - |

| PACIFIC VERSION TERMINATOR INTERFACE ADAPTER | PART NUMBER | REVISION | DESCRIPTION | FEED TYPE |
|---|---|---|---|---|
| 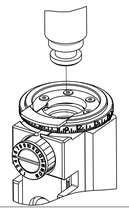 | 2-2151068-1 | E | FINE CRIMP HEIGHT ADJUST | MECHANICAL |
| | 2-2151068-2 | E | FINE CRIMP HEIGHT ADJUST | PNEUMATIC |
| | 2-2151068-5 | E | FINE CRIMP HEIGHT ADJUST | SERVO LATCH PLATE 4 |
| | 2-2151068-7 | E | FINE CRIMP HEIGHT ADJUST | NONE |
| | 7-2151068-7 | D | CRIMP TOOLING KIT | - |

APPLICATOR STYLE CONVERSION CHART

| CONVERT TO | PART NUMBERS REQUIRED | | | | | |
|---|---|---|---|---|---|---|
| PNEUMATIC FEED | 2119950-1 | 1338685-1 | 5-18022-5 | 2119641-2 | 2119799-1 | 2063440-1 |
| SERVO LATCH PLATE | 2119951-1 | - | 8-2151068-5 | 1901094-3 | 1-1752354-8 | 2168400-6 (QUANTITY 2) |
| SMART APPLICATOR | 2161326-1 | - | 8-2151068-4 | - | - | - |
| MECHANICAL FEED | 2119949-1 | 1338685-1 | 5-18022-5 | 2119653-2 | - | - |
| SERVO LATCH PLATE | 2119951-1 | - | 8-2151068-5 | 1901094-3 | 1-1752354-8 | 2168400-6 (QUANTITY 2) |
| SMART APPLICATOR | 2161326-1 | - | 8-2151068-4 | - | - | - |
| MECHANICAL FEED | 2119949-1 | 1338685-1 | 5-18022-5 | 2119653-2 | - | - |
| PNEUMATIC FEED | 2119950-1 | 1338685-1 | 5-18022-5 | 2119641-2 | 2119799-1 | 2063440-1 |
| - | - | - | - | - | - | - |
| - | - | - | - | - | - | - |

APPLICATOR DATA

| CRIMP | SIZE | TYPE |
|---|---|---|
| WIRE | 1.57 mm [.062] | F |
| INSUL | 1.83 mm [.072] | BX |

APPLICATOR INSTRUCTIONS 408-10389

| TERMINAL DATA: TE TERMINAL | | TE CRIMP SPECIFICATION |
|---|---|---|
| TERMINAL NAME: MCON-1.2 CB | | |
| WIRE STRIP LENGTH 3.00-3.60 mm [.118-.142 IN] | | INSULATION DIAMETER RANGE ∅1.40-1.90 mm [.055-.075 IN] |
| TERMINAL APPLICATION SPECIFICATION | 114-18464 12 | - - |
| | - | - - |

TERMINALS APPLIED

| TE TERMINAL | TE TERMINAL | TE TERMINAL | TE TERMINAL |
|---|---|---|---|
| 1670144-1 | 1670144-2 | 1670144-3 | |

| WIRE SIZE | CRIMP HEIGHT mm [INCH] | CRIMP HEIGHT REFERENCE SETTING 9 |
|---|---|---|
| 0.75mm2 | 0.95+/-0.03 [.037+/-.001] | 8.9 |
| 20 AWG OR 0.50mm2 | 0.84+/-0.03 [.033+/-.001] | 10.2 |

1 RECOMMENDED SPARE PARTS

2 GREASE BEARING SURFACES LIGHTLY

3. LUBRICATE DAILY PER THE APPLICATOR INSTRUCTION SHEET SUPPLIED WITH THE APPLICATOR.

4 APPLICATOR SPECIFIC DATA TO BE ENTERED INTO BLANK MEMORY CHIP AT ASSEMBLY. SEE BELOW FOR PART NUMBER:
MECHANICAL FEED WITH "SMART APPLICATOR" CONVERSION: 8-2151068-4
PNEUMATIC FEED WITH "SMART APPLICATOR" CONVERSION: 8-2151068-4
SERVO FEED WITH "FINE CRIMP HEIGHT ADJUST": 8-2151068-5

5. ADJUSTMENT OF THE STRIPPER MAY BE REQUIRED WHEN MOVING THE APPLICATOR BETWEEN BENCH AND LEADMAKER APPLICATIONS.

6 APPLY PART NUMBER 1-23419-5 LOCTITE TO THREADS OF ITEM 62. APPLY PART NUMBER 2-23419-6 LOCTITE TO THREADS OF ITEMS 242.

7 GREASE THREADS, GROOVE AND O-RING ON ITEMS 139 & 152.

8 MAGNET MUST BE ORIENTED CORRECTLY IN ORDER TO PROPERLY ACTUATE THE COUNTER.

9 CRIMP HEIGHT REFERENCE SETTING WAS THE SETTING USED WHEN THE APPLICATOR WAS QUALIFIED AT THE FACTORY. ADJUSTMENT MAY BE NECESSARY WHEN RUNNING APPLICATOR IN THE FIELD.

10 SPARE FEED CAM STORAGE LOCATION REFER TO INSTRUCTION SHEET FOR ADDITIONAL INFORMATION.

11 TO CONVERT THE APPLICATOR TO A NON-CARRIER CUTTING STYLE, REMOVE ITEM 13 AND ATTACH TO THE LOCATION ON BACK SIDE OF THE HOUSING. REFER TO INSTRUCTION SHEET FOR ADDITIONAL INFORMATION.

12 MAXIMUM CRIMP WIDTH 2.05mm & MAXIMUM INSULATION CRIMP HEIGHT 2.05mm. SEE APPLICATION SPECIFICATION TO CLARIFY.

*WARNING
ON INSTALLATION, SET WIRE DISC, ITEM 40 TO LARGEST WIRE SIZE SETTING. USE OF SETTINGS BELOW MINIMUM REQUIRED CRIMP HEIGHT SETTING WILL CAUSE DAMAGE TO CRIMP TOOLING.

| -77 | -27 | -25 | -22 | -21 | PART NO | DESCRIPTION | ITEM NO |
|---|---|---|---|---|---|---|---|
| - | 1 | 1 | 1 | 1 | 2119782-1 | FINE ADJUST HEAD ASM, PACIFIC STYLE | 251 |
| - | - | - | 1 | - | 2119640-1 | PUSH ROD, AIR FEED | 250 |
| -77 | -27 | -25 | -22 | -21 | PART NO | DESCRIPTION | ITEM NO |

| -77 | -27 | -25 | -22 | -21 | PART NO | DESCRIPTION | ITEM NO |
|---|---|---|---|---|---|---|---|
| - | - | - | 1 | - | 2079988-1 | BUSHING, LCH5-12, MISUMI | 249 |
| - | 1 | 1 | 1 | 1 | 1-22279-3 | SPRING, COMPRESSION | 246 |
| - | 1 | 1 | 1 | 1 | 2119082-4 | CAM, SNAIL, INSULATION ADJUSTMENT | 244 |
| - | 1 | 1 | 1 | 1 | 2079764-1 | WASHER, WAVE SPRING, CREST-TO-CREST | 243 |
| - | 1 | 1 | 1 | 1 | 2119083-1 | RETAINER, INSULATION DIAL | 242 |
| - | 1 | 1 | 1 | 1 | 7-18023-7 | SCR, SKT HD CAP M3 X 4.0 | 241 |
| - | - | 2 | - | - | 2168400-6 | SHCS, LOW HEAD, RoHS, M5 X 16 | 240 |
| - | - | - | - | 1 | 2119580-1 | MECHANICAL FEED ASSEMBLY | 239 |
| - | - | - | 1 | - | 2063440-1 | AIR FEED MODULE | 238 |
| - | - | 1 | - | - | 2119740-2 | TAG,IDENTIFICATION | 213 |
| - | - | 1 | - | - | 1901094-3 | SPACER, FEEDER | 198 |
| - | - | - | 2 | - | 21045-3 | RING, RETAIN, EXTERN, 3/16 CRESCENT | 172 |
| - | 1 | 1 | 1 | 1 | 994969-1 | MAGNET, RARE EARTH HIGH ENERGY | 166 |
| - | REF | REF | REF | REF | 994970-2 | COUNTER, MAGNETIC | 164 |
| - | - | - | 1 | - | 240638-1 | SPRING, FEED FINGER | 163 |
| - | 1 | 1 | 1 | 1 | 8-21084-1 | O-RING, .801 ID, .070 DIA. MAT. | 152 |
| - | - | - | 1 | - | 2119641-2 | FEED CAM, AIR FEED | 151 |
| - | 1 | 1 | 1 | 1 | 2119798-2 | DETENT PIN | 145 |
| - | 1 | 1 | 1 | 1 | 2079383-8 | SCR, BHSC, RoHS (M4 X 16) | 144 |
| - | 4 | 4 | 4 | 4 | 2168400-5 | SHCS, LOW HEAD, RoHS, M4 X 20 | 143 |
| - | - | - | - | 1 | 2119653-2 | FEED CAM, POST FEED | 142 |
| - | 1 | 1 | 1 | 1 | 1-2119656-0 | APPLICATOR BASIC ASSEMBLY, SF | 141 |
| - | 1 | 1 | 1 | 1 | 2119650-1 | RAM, ASIAN STYLE, SIDE FEED | 140 |
| - | 1 | 1 | 1 | 1 | 2119092-2 | BOLT, ADJUSTMENT | 139 |
| - | - | - | 1 | - | 3-23627-7 | PIN, RETAIN, GRVD, 3/16 X .854 | 137 |
| - | - | - | 1 | - | 2119799-1 | HOLDER,FEED FINGER, AF | 136 |
| - | - | REF | - | - | SEE NOTE 4 | MEMORY CHIP, PROGRAMMED | 135 |
| - | - | 1 | - | - | 1633743-1 | SERVO FEED LATCH ASM | 133 |
| - | 1 | 1 | 1 | 1 | 1-18028-2 | WASHER, FLAT, REG M4 | 119 |
| - | - | REF | - | - | 2119944-1 | FEED FINGER ASSEMBLY,SF | 117 |
| - | 1 | 1 | 1 | 1 | 455888-4 | SPACER, CRIMPER | 82 |
| - | 2 | 2 | 2 | 2 | 1-2079383-0 | SCR, BHSC, RoHS (M3 X 6) | 79 |
| - | 1 | 1 | 1 | 1 | 1633782-2 | FENCE | 78 |
| - | 1 | 1 | 1 | 1 | 2119956-1 | DOCUMENTATION PACKAGE | 71 |
| - | 1 | 1 | 1 | 1 | 2119791-5 | DEPRESSOR, WIRE | 70 |
| - | 1 | - | 1 | 1 | 2119740-1 | TAG,IDENTIFICATION | 67 |
| - | 2 | 2 | 2 | 2 | 2168078-1 | SCREW, DRIVE, RH, RoHS, 2 x .188 | 66 |
| - | 1 | 1 | 1 | 1 | 2119793-1 | LIMITER, ADJUSTMENT BOLT | 63 |
| - | 3 | 3 | 3 | 3 | 992763-5 | SCR, SET, SOC, CONE POINT, M3 x 4.0 | 62 |
| - | - | - | 1 | 1 | 5-18022-5 | SCR, HEX HD CAP, M4 X 6.0 | 59 |
| - | - | - | 1 | 1 | 1338685-1 | PAWL, FEED | 56 |
| - | 2 | 2 | 2 | 2 | 1-2168083-0 | SCR, SKT HD CAP, RoHS, M4 X 10 | 53 |
| - | 1 | 1 | 1 | 1 | 5018030-1 | NUT, HEX, REG, RoHS, M3 | 52 |
| - | 1 | 1 | 1 | 1 | 811242-5 | BUMPER, HOLD DOWN | 51 |
| - | 1 | 1 | 1 | 1 | 690753-2 | SPACER, TONKER | 50 |
| - | - | - | 1 | 2 | 18023-9 | SCR, SKT HD CAP M4 X 6.0 | 49 |
| - | - | - | - | 1 | 2119652-1 | FEED CAM, PRE FEED | 48 |
| - | 1 | 1 | 1 | 1 | 2079383-7 | SCR, BHSC, RoHS (M8 X 25) | 41 |
| - | 1 | 1 | 1 | 1 | 2119645-1 | DISC, NUMBERED FA WIRE ADJUSTMENT | 40 |
| - | 1 | 1 | 1 | 1 | 2119957-1 | APPLICATOR SHIM PACK | 39 |
| - | 1 | 1 | 1 | 1 | 2119644-1 | RAM WASHER, PRECISION | 38 |
| - | 1 | 1 | 1 | 1 | 3-1752356-3 | SUPPORT, TERMINAL | 34 |
| - | 2 | 2 | 2 | 2 | 2079383-5 | SCR, BHSC, RoHS (M4 X 20) | 33 |
| - | 1 | 1 | 1 | 1 | 2161328-1 | HEX HEAD, FLANGED, M5 x 8mm LONG | 32 |
| - | 1 | 1 | 1 | 1 | 1320908-3 | SPACER, STRIP GUIDE | 30 |
| - | 1 | 1 | 1 | 1 | 2119959-2 | ASSEMBLY, STRIP GUIDE | 29 |
| - | 1 | 1 | 1 | 1 | 1320928-2 | STRIP GUIDE | 24 |
| - | 1 | 1 | 1 | 1 | 2168083-2 | SCR, SKT HD CAP, RoHS, M4 X 8.0 | 21 |
| - | 1 | 1 | 1 | 1 | 1-18028-2 | WASHER, FLAT, REG M4 | 20 |
| - | 1 | 1 | 1 | 1 | 2119533-1 | STRIPPER, SIDE FEED | 19 |
| - | 1 | 1 | 1 | 1 | 2119806-1 | INSERT, SHEAR | 13 |
| - | 1 | 1 | 1 | 1 | 3-22280-3 | SPRING, COMPRESSION | 12 |
| - | 1 | 1 | 1 | 1 | 1-18023-1 | SCR, SKT HD CAP M4 X 10.0 | 11 |
| - | 1 | 1 | 1 | 1 | 2119805-1 | SHEAR HOLDER, FRONT | 10 |
| - | 1 | 1 | 1 | 1 | 1803095-6 | FLOATING SHEAR, FRONT | 9 |
| 1 | 1 | 1 | 1 | 1 | 1333231-2 | ANVIL, COMBINATION, SPECIAL | 8 |
| - | - | - | - | - | - | - | 7 |
| - | - | - | - | - | - | - | 6 |
| - | 1 | 1 | 1 | 1 | 2119757-8 | DEPRESSOR, SHEAR | 5 |
| - | 1 | 1 | 1 | 1 | 238011-2 | BLOCK, CRIMPER SPACER | 4 |
| 1 | 1 | 1 | 1 | 1 | 1-1633989-6 | CRIMPER, INSULATION, SPECIAL | 3 |
| - | 1 | 1 | 1 | 1 | 455888-1 | SPACER, CRIMPER | 2 |
| 1 | 1 | 1 | 1 | 1 | 5-456403-0 | CRIMPER, WIRE PREMIUM | 1 |
| -77 | -27 | -25 | -22 | -21 | PART NO | DESCRIPTION | ITEM NO |

# PACIFIC VERSION

Shown on sheets 3 of 4 & 4 of 4
(Atlantic version shown on sheets 1 of 4 & 2 of 4)

THIS DRAWING IS A CONTROLLED DOCUMENT FOR TYCO ELECTRONICS CORPORATION. IT IS SUBJECT TO CHANGE AND THE CONTROLLING OPERATING ORGANIZATION SHOULD BE CONTACTED FOR THE LATEST REVISION.

DIMENSIONS: mm

TOLERANCES UNLESS OTHERWISE SPECIFIED:
0 PLC ±-
1 PLC ±0.5
2 PLC ±0.13
3 PLC ±0.013
4 PLC ±0.0001
ANGLES ±-

MATERIAL - -
FINISH - -

DWN R.KNEPPER 21MAY2013
CHK G.BAILEY 21MAY2013
APVD M.CLIFFORD 21MAY2013
PRODUCT SPEC -
APPLICATION SPEC -
WEIGHT -

TE Connectivity
Harrisburg, PA 17105-3608

NAME Ocean Side Feed Applicator -

| SIZE | CAGE CODE | DRAWING NO | RESTRICTED TO |
|---|---|---|---|
| A1 | 00779 | C-2151068 | - |

Customer Accessible Production Drawing | SCALE 1:2 | SHEET 3 OF 4 | REV E



SHEETS 1 & 2 ARE NOT REQUIRED FOR PACIFIC VERSION

THIS DRAWING IS UNPUBLISHED. RELEASED FOR PUBLICATION 20
© COPYRIGHT 20 BY TYCO ELECTRONICS CORPORATION. ALL RIGHTS RESERVED.

| LOC | DIST |
|---|---|
| A | 66 |

REVISIONS

| P | LTR | DESCRIPTION | DATE | DWN | APVD |
|---|---|---|---|---|---|
| | - | SEE SHEET 1 | - | - | - |

# FEED TYPE

## MECHANICAL

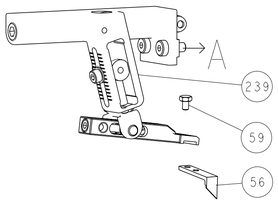


## PNEUMATIC

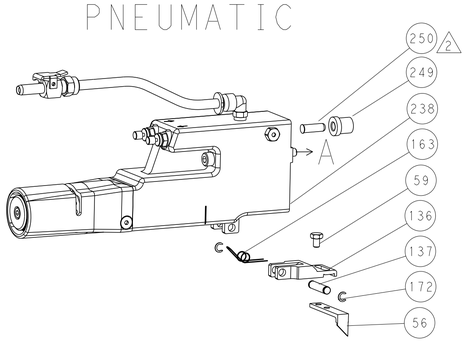


## SERVO LATCH PLATE

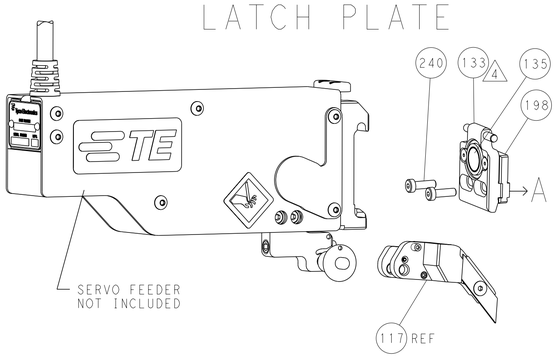


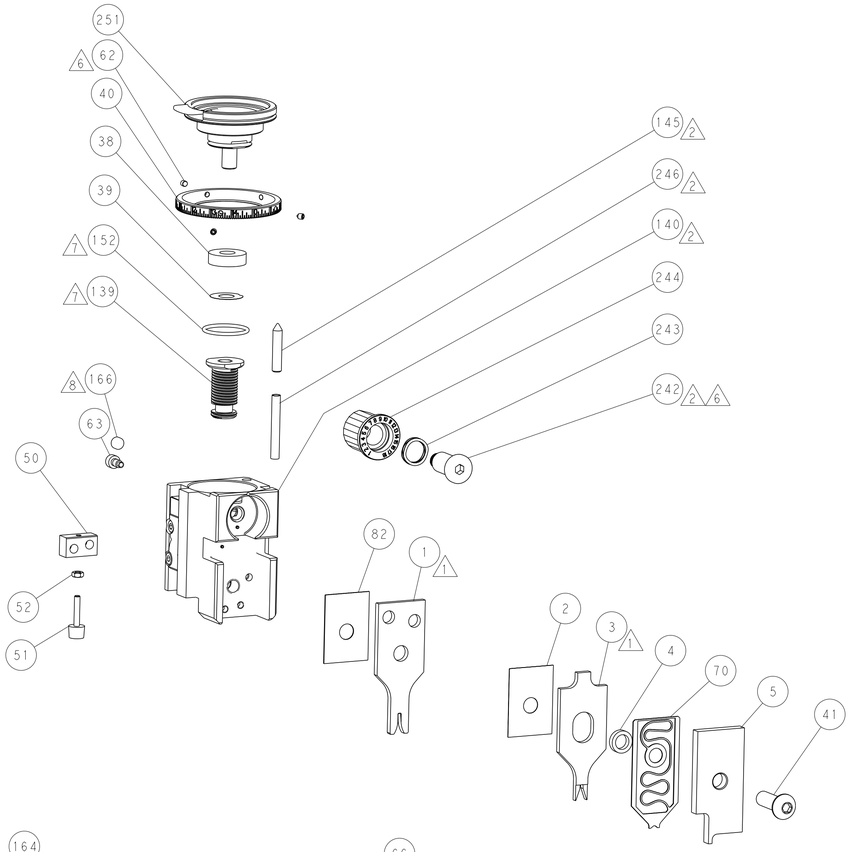


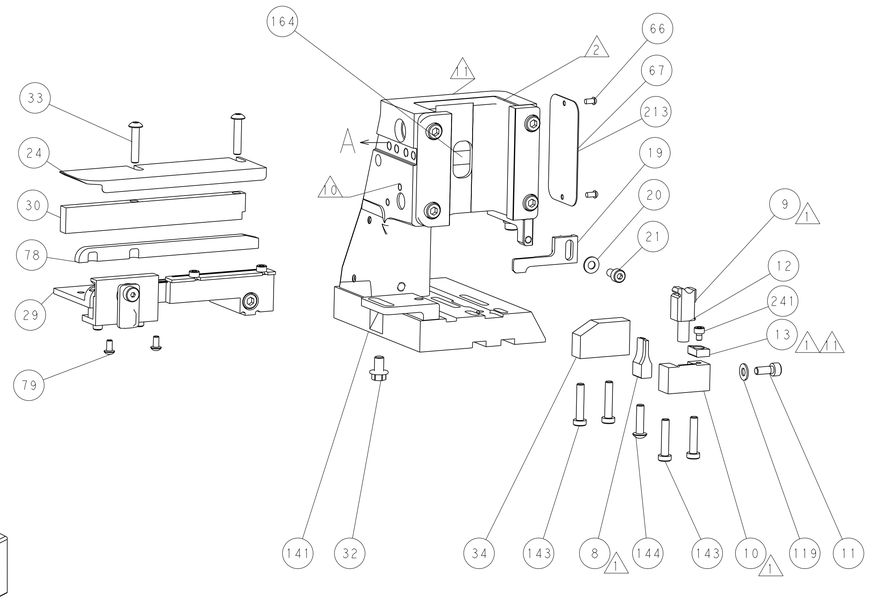


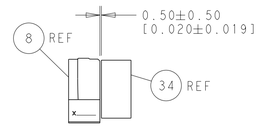


TERMINAL SUPPORT LOCATION

## CAM POSITIONS

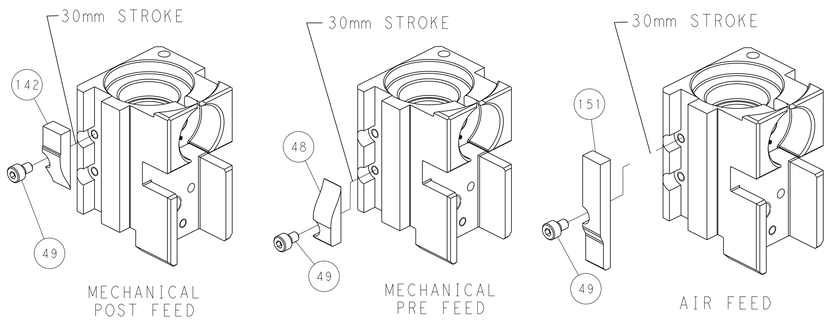


MECHANICAL POST FEED

MECHANICAL PRE FEED

AIR FEED

ITEM 30 LOCATED AT FRONT HOLES

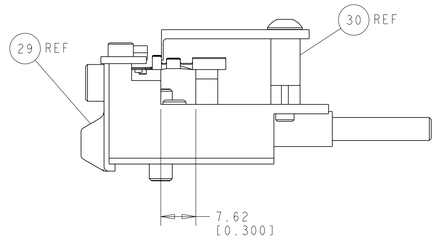


FEED TRACK POSITION
GUIDE BY INSULATION BARREL

# PACIFIC VERSION

Shown on sheets 3 of 4 & 4 of 4
(Atlantic version shown on sheets 1 of 4 & 2 of 4)

THIS DRAWING IS A CONTROLLED DOCUMENT FOR TYCO ELECTRONICS CORPORATION. IT IS SUBJECT TO CHANGE AND THE CONTROLLING ENGINEERING ORGANIZATION SHOULD BE CONTACTED FOR THE LATEST REVISION.

DIMENSIONS: mm

TOLERANCES UNLESS OTHERWISE SPECIFIED:
0 PLC ±-
1 PLC ±0.5
2 PLC ±0.13
3 PLC ±0.013
4 PLC ±0.0001
ANGLES ±-

MATERIAL - -
FINISH - -

| | | |
|---|---|---|
| DWN | R.KNEPPER | 21MAY2013 |
| CHK | G.BAILEY | 21MAY2013 |
| APVD | M.CLIFFORD | 21MAY2013 |
| PRODUCT SPEC | - | |
| APPLICATION SPEC | - | |
| WEIGHT | - | |

TE Connectivity
Harrisburg, PA 17105-3608

NAME: Ocean Side Feed Applicator -

| SIZE | CAGE CODE | DRAWING NO | RESTRICTED TO |
|---|---|---|---|
| A1 | 00779 | C-2151068 | - |

Customer Accessible Production Drawing | SCALE 1:2 | SHEET 4 OF 4 | REV E

AMP 4805 REV 31MAR2000

SHEETS 1 & 2 ARE NOT REQUIRED FOR PACIFIC VERSION

Общество с ограниченной ответственностью «МосЧип» ИНН 7719860671 / КПП 771901001
Адрес: 105318, г.Москва, ул.Щербаковская д.3, офис 1107

**Данный компонент на территории Российской Федерации**

**Вы можете приобрести в компании MosChip.**

Для оперативного оформления запроса Вам необходимо перейти по данной ссылке:

http://moschip.ru/get-element

Вы можете разместить у нас заказ для любого Вашего проекта, будь то серийное производство или разработка единичного прибора.

В нашем ассортименте представлены ведущие мировые производители активных и пассивных электронных компонентов.

Нашей специализацией является поставка электронной компонентной базы двойного назначения, продукции таких производителей как XILINX, Intel (ex.ALTERA), Vicor, Microchip, Texas Instruments, Analog Devices, Mini-Circuits, Amphenol, Glenair.

Сотрудничество с глобальными дистрибьюторами электронных компонентов, предоставляет возможность заказывать и получать с международных складов практически любой перечень компонентов в оптимальные для Вас сроки.

На всех этапах разработки и производства наши партнеры могут получить квалифицированную поддержку опытных инженеров.

Система менеджмента качества компании отвечает требованиям в соответствии с ГОСТ Р ИСО 9001, ГОСТ РВ 0015-002 и ЭС РД 009

**Офис по работе с юридическими лицами:**

105318, г.Москва, ул.Щербаковская д.3, офис 1107, 1118, ДЦ «Щербаковский»

Телефон: +7 495 668-12-70 (многоканальный)

Факс: +7 495 668-12-70 (доб.304)

E-mail: info@moschip.ru

Skype отдела продаж:
moschip.ru
moschip.ru_4
moschip.ru_6
moschip.ru_9