Data Sheet July 22, 2005 FN3183.4

## Automatic Battery Back-Up Switch

The Intersil ICL7673 is a monolithic CMOS battery backup circuit that offers unique performance advantages over conventional means of switching to a backup supply. The ICL7673 is intended as a low-cost solution for the switching of systems between two power supplies; main and battery backup. The main application is keep-alive-battery power switching for use in volatile CMOS RAM memory systems and real time clocks. In many applications this circuit will represent a low insertion voltage loss between the supplies and load. This circuit features low current consumption, wide operating voltage range, and exceptionally low leakage between inputs. Logic outputs are provided that can be used to indicate which supply is connected and can also be used to increase the power switching capability of the circuit by driving external PNP transistors.

## Ordering Information

| PART NUMBER | TEMP. RANGE (°C) | PACKAGE | PKG. DWG. # |
|---|---|---|---|
| ICL7673CPA | 0 to 70 | 8 Ld PDIP | E8.3 |
| ICL7673CPAZ (See Note) | 0 to 70 | 8 Ld PDIP* (Pb-free) | E8.3 |
| ICL7673CBA | 0 to 70 | 8 Ld SOIC (N) | M8.15 |
| ICL7673CBA-T | 8 Ld SOIC (N) Tape and Reel | | M8.15 |
| ICL7673CBAZA (See Note) | 0 to 70 | 8 Ld SOIC (N) (Pb-free) | M8.15 |
| ICL7673CBAZA-T (See Note) | 0 to 70 | 8 Ld SOIC (N) (Pb-free) | M8.15 |

*Pb-free PDIPs can be used for through hole wave solder processing only. They are not intended for use in Reflow solder processing applications.

NOTE: Intersil Pb-free plus anneal products employ special Pb-free material sets; molding compounds/die attach materials and 100% matte tin plate termination finish, which are RoHS compliant and compatible with both SnPb and Pb-free soldering operations. Intersil Pb-free products are MSL classified at Pb-free peak reflow temperatures that meet or exceed the Pb-free requirements of IPC/JEDEC J STD-020.

## Pinouts

**ICL7673 (SOIC, PDIP)**
TOP VIEW

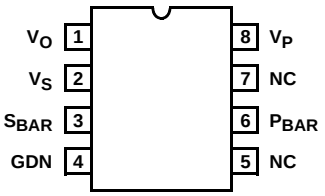


## Features

- Automatically Connects Output to the Greater of Either Input Supply Voltage
- If Main Power to External Equipment is Lost, Circuit Will Automatically Connect Battery Backup
- Reconnects Main Power When Restored
- Logic Indicator Signaling Status of Main Power
- Low Impedance Connection Switches
- Low Internal Power Consumption
- Wide Supply Range: . . . . . 2.5V to 15V
- Low Leakage Between Inputs
- External Transistors May Be Added if Very Large Currents Need to Be Switched
- Pb-Free Plus Anneal Available (RoHS Compliant)

## Applications

- On Board Battery Backup for Real-Time Clocks, Timers, or Volatile RAMs
- Over/Under Voltage Detector
- Peak Voltage Detector
- Other Uses:
  - Portable Instruments, Portable Telephones, Line Operated Equipment

## Functional Block Diagram

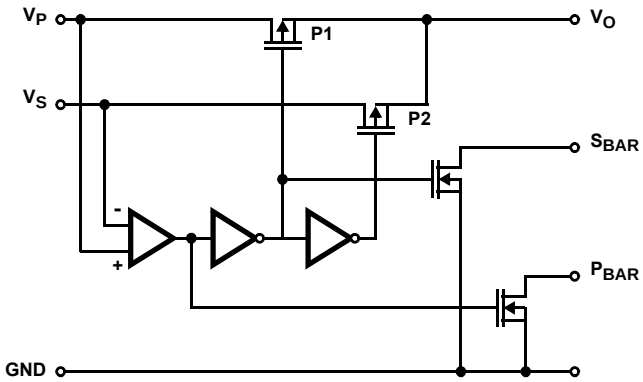


$V_P > V_S$, P1 SWITCH ON AND $P_{BAR}$ SWITCH ON
$V_S > V_P$, P2 SWITCH ON AND $S_{BAR}$ SWITCH ON



CAUTION: These devices are sensitive to electrostatic discharge; follow proper IC Handling Procedures.
1-888-INTERSIL or 1-888-468-3774 | Intersil (and design) is a registered trademark of Intersil Americas Inc.
Copyright © Intersil Americas Inc. 1999-2005. All Rights Reserved
All other trademarks mentioned are the property of their respective owners.

## Absolute Maximum Ratings

Input Supply ($V_P$ or $V_S$) Voltage . . . . . GND - 0.3V to +18V
Output Voltages $P_{BAR}$ and $S_{BAR}$ . . . . . GND - 0.3V to +18V
Peak Current
Input $V_P$ (at $V_P$ = 5V) (Note 1) . . . . . 38mA
Input $V_S$ (at $V_S$ = 3V) . . . . . 30mA
$P_{BAR}$ or $S_{BAR}$ . . . . . 150mA

## Operating Conditions

Temperature Range:
ICL7673C . . . . . 0°C to 70°C

## Thermal Information

| Thermal Resistance (Typical, Note 2) | $\theta_{JA}$ (°C/W) | $\theta_{JC}$ (°C/W) |
|---|---|---|
| PDIP Package* . . . . . | 150 | N/A |
| Plastic SOIC Package . . . . . | 180 | N/A |

Maximum Storage Temperature. . . . . -65°C to 150°C
Maximum Lead Temperature (Soldering, 10sec). . . . . 300°C
(SOIC - Lead Tips Only)

*Pb-free PDIPs can be used for through hole wave solder processing only. They are not intended for use in Reflow solder processing applications.

*CAUTION: Stresses above those listed in "Absolute Maximum Ratings" may cause permanent damage to the device. This is a stress only rating and operation of the device at these or any other conditions above those indicated in the operational sections of this specification is not implied.*

NOTES:

1. Derate above 25°C by 0.38mA/°C.
2. $\theta_{JA}$ is measured with the component mounted on an evaluation PC board in free air.

## Electrical Specifications $T_A$ = 25°C Unless Otherwise Specified

| PARAMETER | SYMBOL | TEST CONDITIONS | MIN | TYP | MAX | UNITS |
|---|---|---|---|---|---|---|
| Input Voltage | $V_P$ | $V_S$ = 0V, $I_{LOAD}$ = 0mA | 2.5 | - | 15 | V |
| | $V_S$ | $V_P$ = 0V, $I_{LOAD}$ = 0mA | 2.5 | - | 15 | V |
| Quiescent Supply Current | I+ | $V_P$ = 0V, $V_S$ = 3V, $I_{LOAD}$ = 0mA | - | 1.5 | 5 | µA |
| Switch Resistance P1 (Note 1) | $r_{DS(ON)}P1$ | $V_P$ = 5V, $V_S$ = 3V, $I_{LOAD}$ = 15mA | - | 8 | 15 | Ω |
| | | At $T_A$ = +85°C | - | 16 | - | Ω |
| | | $V_P$ = 9V, $V_S$ = 3V, $I_{LOAD}$ = 15mA | - | 6 | - | Ω |
| | | $V_P$ = 12V, $V_S$ = 3V, $I_{LOAD}$ = 15mA | - | 5 | - | Ω |
| Temperature Coefficient of Switch Resistance P1 | $T_{C(P1)}$ | $V_P$ = 5V, $V_S$ = 3v, $I_{LOAD}$ = 15mA | - | 0.5 | - | %/°C |
| Switch Resistance P2 (Note 1) | $r_{DS(ON)}P2$ | $V_P$ = 0V, $V_S$ = 3V, $I_{LOAD}$ = 1mA | - | 40 | 100 | Ω |
| | | At $T_A$ = +85°C | - | 60 | - | Ω |
| | | $V_P$ = 0V, $V_S$ = 5V, $I_{LOAD}$ = 1mA | - | 26 | - | Ω |
| | | $V_P$ = 0V, $V_S$ = 9V, $I_{LOAD}$ = 1mA | - | 16 | - | Ω |
| Temperature Coefficient of Switch Resistance P2 | $T_{C(P2)}$ | $V_P$ = 0V, $V_S$ = 3V, $I_{LOAD}$ = 1mA | - | 0.7 | - | %/°C |
| Leakage Current ($V_P$ to $V_S$) | $I_{L(PS)}$ | $V_P$ = 5V, $V_S$ = 3V, $I_{LOAD}$ = 10mA | - | 0.01 | 20 | nA |
| | | At $T_A$ = +85°C | - | 35 | - | nA |
| Leakage Current ($V_P$ to $V_S$) | $I_{L(SP)}$ | $V_P$ = 0V, $V_S$ = 3V, $I_{LOAD}$ = 10mA | - | 0.01 | 50 | nA |
| | | at $T_A$ = +85°C | - | 120 | - | nA |
| Open Drain Output Saturation Voltages | $V_{OPBAR}$ | $V_P$ = 5V, $V_S$ = 3V, $I_{SINK}$ = 3.2mA, $I_{LOAD}$ = 0mA | - | 85 | 400 | mV |
| | | At $T_A$ = 85°C | - | 120 | - | mV |
| | | $V_P$ = 9V, $V_S$ = 3V, $I_{SINK}$ = 3.2mA, $I_{LOAD}$ = 0mA | - | 50 | - | mV |
| | | $V_P$ = 12V, $V_S$ = 3V, $I_{SINK}$ = 3.2mA $I_{LOAD}$ = 0mA | - | 40 | - | mV |
| Open Drain Output Saturation Voltages | $V_{OSBAR}$ | $V_P$ = 0V, $V_S$ = 3V, $I_{SINK}$ = 3.2mA, $I_{LOAD}$ = 0mA | - | 150 | 400 | mV |
| | | at $T_A$ = +85°C | - | 210 | - | mV |
| | | $V_P$ = 0V, $V_S$ = 5V, $I_{SINK}$ = 3.2mA $I_{LOAD}$ = 0mA | - | 85 | - | mV |
| | | $V_P$ = 0V, $V_S$ = 9V, $I_{SINK}$ = 3.2mA $I_{LOAD}$ = 0mA | - | 50 | - | mV |

## Electrical Specifications $T_A$ = 25°C Unless Otherwise Specified **(Continued)**

| PARAMETER | SYMBOL | TEST CONDITIONS | MIN | TYP | MAX | UNITS |
|---|---|---|---|---|---|---|
| Output Leakage Currents of $P_{BAR}$ and $S_{BAR}$ | $I_{LPBAR}$ | $V_P$ = 0V, $V_S$ = 15V, $I_{LOAD}$ = 0mA | - | 50 | 500 | nA |
| | | at $T_A$ = +85°C | - | 900 | - | nA |
| | $I_{LSBAR}$ | $V_P$ = 15V, $V_S$ = 0V, $I_{LOAD}$ = 0mA | - | 50 | 500 | nA |
| | | at $T_A$ = +85°C | - | 900 | - | nA |
| Switchover Uncertainty for Complete Switching of Inputs and Open Drain Outputs | $V_P$ - $V_S$ | $V_S$ = 3V, $I_{SINK}$ = 3.2mA, $I_{LOAD}$ = 15mA | - | ±10 | ±50 | mV |

NOTE:

3. The Minimum input to output voltage can be determined by multiplying the load current by the switch resistance.

## *Typical Performance Curves*

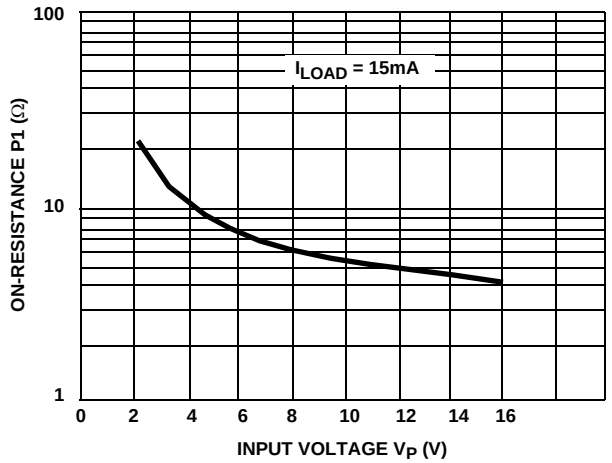


**FIGURE 1. ON-RESISTANCE SWITCH P1 AS A FUNCTION OF INPUT VOLTAGE $V_P$**

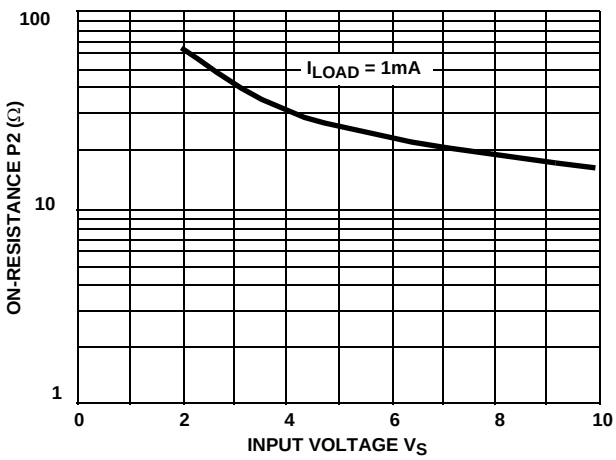


**FIGURE 2. ON-RESISTANCE SWITCH P2 AS A FUNCTION OF INPUT VOLTAGE $V_S$**

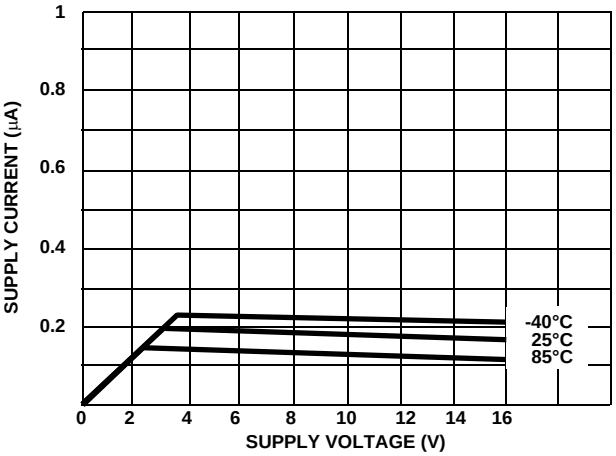


**FIGURE 3. SUPPLY CURRENT AS A FUNCTION OF SUPPLY VOLTAGE**

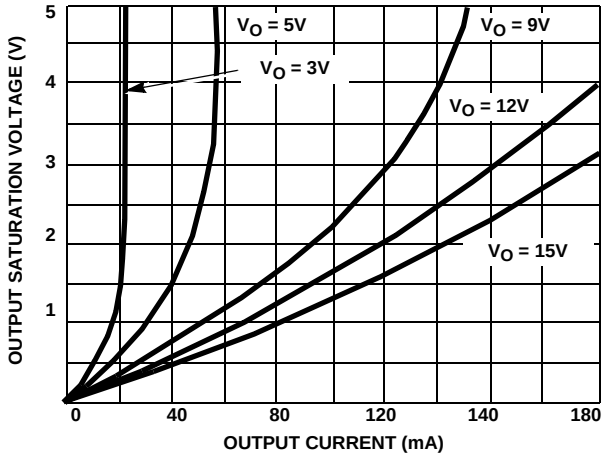


**FIGURE 4. $P_{BAR}$ OR $S_{BAR}$ SATURATION VOLTAGE AS A FUNCTION OF OUTPUT CURRENT**

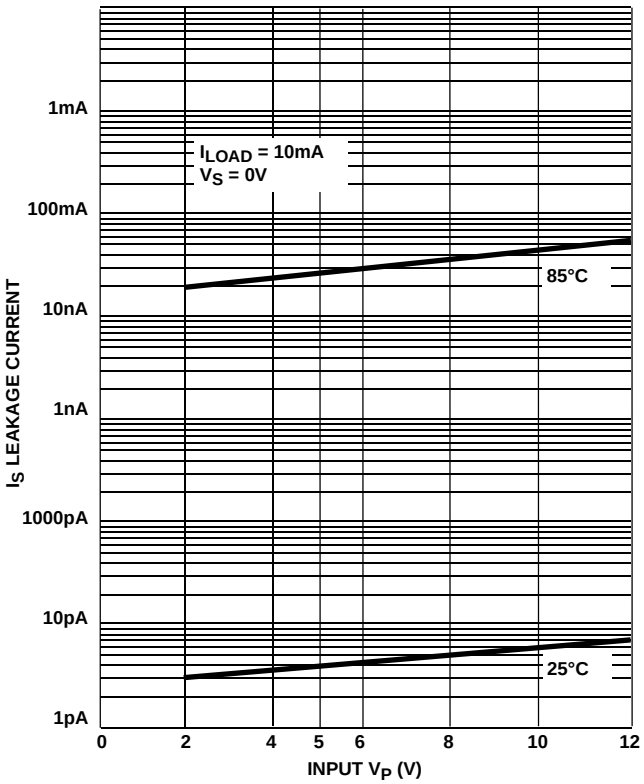


FIGURE 5. $I_S$ LEAKAGE CURRENT $V_P$ TO $V_S$ AS A FUNCTION OF INPUT VOLTAGE

## Detailed Description

As shown in the Functional Diagram, the ICL7673 includes a comparator which senses the input voltages $V_P$ and $V_S$. The output of the comparator drives the first inverter and the open-drain N-Channel transistor $P_{BAR}$. The first inverter drives a large P-Channel switch, $P_1$, a second inverter, and another open-drain N-Channel transistor, $S_{BAR}$. The second inverter drives another large P-Channel switch $P_2$. The ICL7673, connected to a main and a backup power supply, will connect the supply of greater potential to its output. The circuit provides break-before-make switch action as it switches from main to backup power in the event of a main power supply failure. For proper operation, inputs $V_P$ and $V_S$ must not be allowed to float, and, the difference in the two supplies must be greater than 50mV. The leakage current through the reverse biased parasitic diode of switch $P_2$ is very low.

## Output Voltage

The output operating voltage range is 2.5V to 15V. The insertion loss between either input and the output is a function of load current, input voltage, and temperature. This is due to the P-Channels being operated in their triode region, and, the ON-resistance of the switches is a function of output voltage $V_O$. The ON-resistance of the P-Channels have positive temperature coefficients, and therefore as temperature increases the insertion loss also increases. At low load currents the output voltage is nearly equal to the greater of the two inputs. The maximum voltage drop across switch $P_1$ or $P_2$ is 0.5V, since above this voltage the body-drain parasitic diode will become forward biased. Complete switching of the inputs and open-drain outputs typically occurs in 50µs.

## Input Voltage

The input operating voltage range for $V_P$ or $V_S$ is 2.5V to 15V. The input supply voltage ($V_P$ or $V_S$) slew rate should be limited to 2V per microsecond to avoid potential harm to the circuit. In line-operated systems, the rate-of-rise (or fall) of the supply is a function of power supply design. For battery applications it may be necessary to use a capacitor between the input and ground pins to limit the rate-of-rise of the supply voltage. A low-impedance capacitor such as a 0.047µF disc ceramic can be used to reduce the rate-of-rise.

## Status Indicator Outputs

The N-Channel open drain output transistors can be used to indicate which supply is connected, or can be used to drive external PNP transistors to increase the power switching capability of the circuit. When using external PNP power transistors, the output current is limited by the beta and thermal characteristics of the power transistors. The application section details the use of external PNP transistors.

## Applications

A typical discrete battery backup circuit is illustrated in Figure 6. This approach requires several components, substantial printed circuit board space, and high labor cost. It also consumes a fairly high quiescent current. The ICL7673 battery backup circuit, illustrated in Figure 7, will often replace such discrete designs and offer much better performance, higher reliability, and lower system manufacturing cost. A trickle charge system could be implemented with an additional resistor and diode as shown in Figure 8. A complete low power AC to regulated DC system can be implemented using the ICL7673 and ICL7663S micropower voltage regulator as shown in Figure 9.

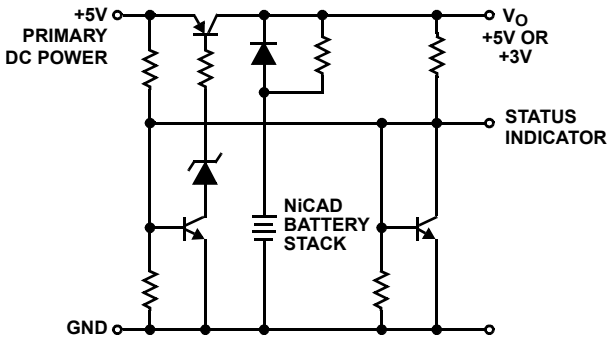


FIGURE 6. DISCRETE BATTERY BACKUP CIRCUIT

Applications for the ICL7673 include volatile semiconductor memory storage systems, real-time clocks, timers, alarm systems, and over/under the voltage detectors. Other systems requiring DC power when the master AC line supply fails can also use the ICL7673.

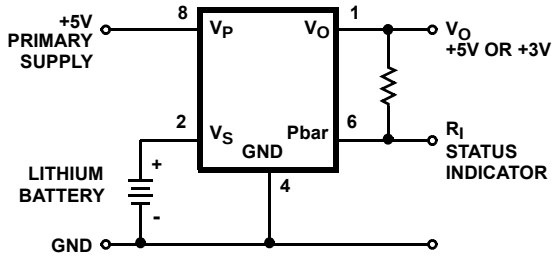


FIGURE 7. ICL7673 BATTERY BACKUP CIRCUIT

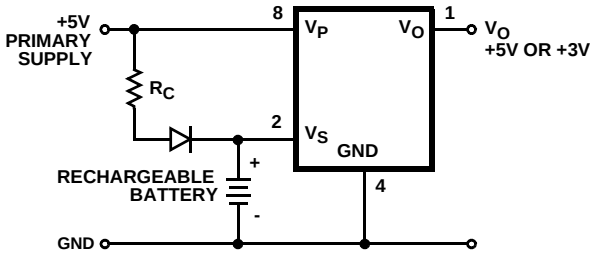


FIGURE 8. APPLICATION REQUIRING RECHARGEABLE BATTERY BACKUP

A typical application, as illustrated in Figure 12, would be a microprocessor system requiring a 5V supply. In the event of primary supply failure, the system is powered down, and a 3V battery is employed to maintain clock or volatile memory data. The main and backup supplies are connected to $V_P$ and $V_S$, with the circuit output $V_O$ supplying power to the clock or volatile memory. The ICL7673 will sense the main supply, when energized, to be of greater potential than $V_S$ and connect, via its internal MOS switches, $V_P$ to output $V_O$. The backup input, $V_S$ will be disconnected internally. In the event of main supply failure, the circuit will sense that the backup supply is now the greater potential, disconnect $V_P$ from $V_O$, and connect $V_S$.

Figure 11 illustrates the use of external PNP power transistors to increase the power switching capability of the circuit. In this application the output current is limited by the beta and thermal characteristics of the power transistors.

If hysteresis is desired for a particular low power application, positive feedback can be applied between the input $V_P$ and open drain output $S_{BAR}$ through a resistor as illustrated in Figure 12. For high power applications hysteresis can be applied as shown in Figure 13.

The ICL7673 can also be used as a clipping circuit as illustrated in Figure 14. With high impedance loads the circuit output will be nearly equal to the greater of the two input signals.

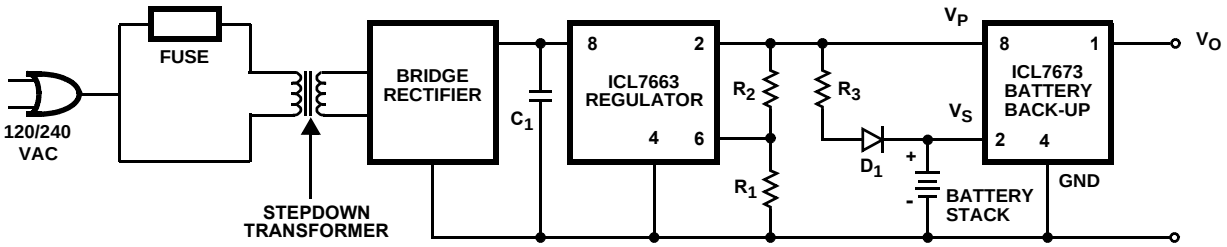


FIGURE 9. POWER SUPPLY FOR LOW POWER PORTABLE AC TO DC SYSTEMS

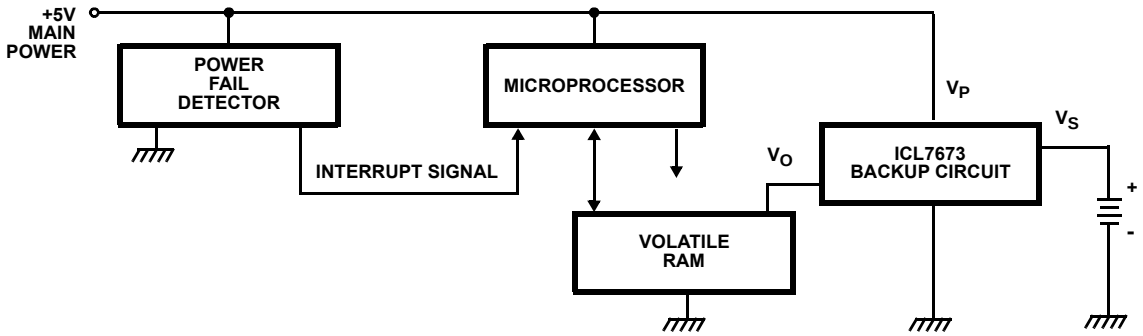


FIGURE 10. TYPICAL MICROPROCESSOR MEMORY APPLICATION

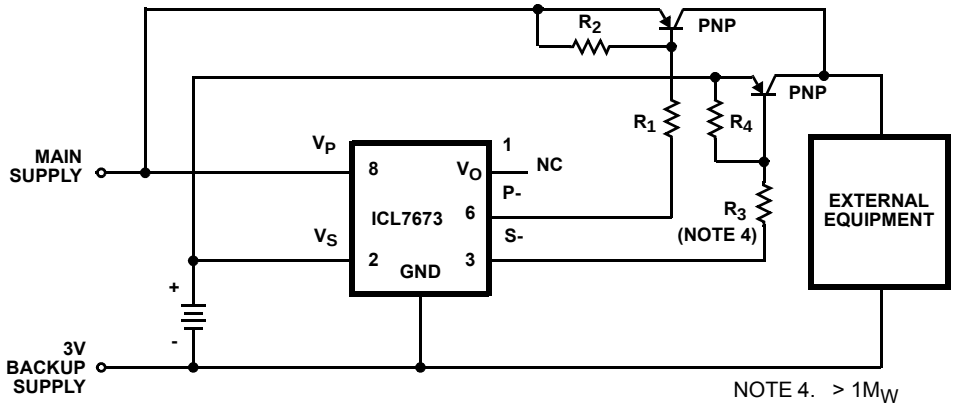


FIGURE 11. HIGH CURRENT BATTERY BACKUP SYSTEM

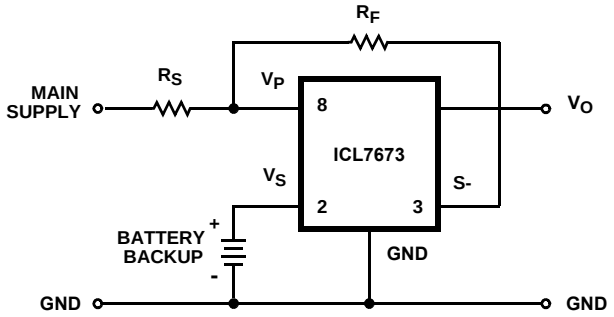


FIGURE 12. LOW CURRENT BATTERY BACKUP SYSTEM WITH HYSTERESIS

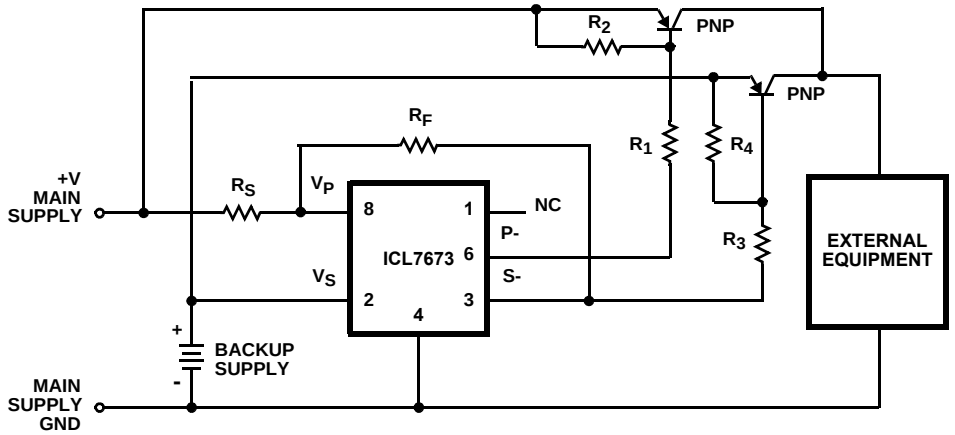


FIGURE 13. HIGH CURRENT BACKUP SYSTEM WITH HYSTERESIS

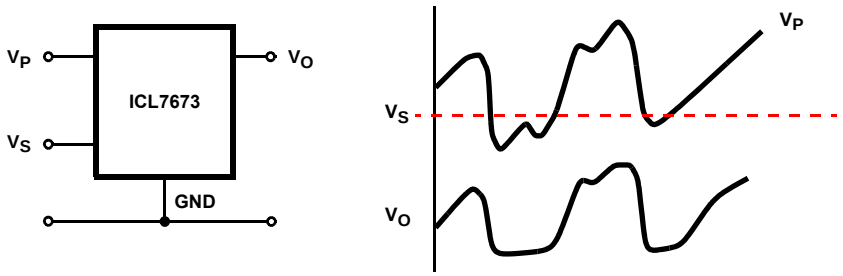


FIGURE 14. CLIPPLING CIRCUITS

All Intersil U.S. products are manufactured, assembled and tested utilizing ISO9000 quality systems.
Intersil Corporation's quality certifications can be viewed at www.intersil.com/design/quality

*Intersil products are sold by description only. Intersil Corporation reserves the right to make changes in circuit design, software and/or specifications at any time without notice. Accordingly, the reader is cautioned to verify that data sheets are current before placing orders. Information furnished by Intersil is believed to be accurate and reliable. However, no responsibility is assumed by Intersil or its subsidiaries for its use; nor for any infringements of patents or other rights of third parties which may result from its use. No license is granted by implication or otherwise under any patent or patent rights of Intersil or its subsidiaries.*

For information regarding Intersil Corporation and its products, see www.intersil.com

Общество с ограниченной ответственностью «МосЧип» ИНН 7719860671 / КПП 771901001
Адрес: 105318, г.Москва, ул.Щербаковская д.3, офис 1107

**Данный компонент на территории Российской Федерации**

**Вы можете приобрести в компании MosChip.**

Для оперативного оформления запроса Вам необходимо перейти по данной ссылке:

http://moschip.ru/get-element

Вы можете разместить у нас заказ для любого Вашего проекта, будь то серийное производство или разработка единичного прибора.

В нашем ассортименте представлены ведущие мировые производители активных и пассивных электронных компонентов.

Нашей специализацией является поставка электронной компонентной базы двойного назначения, продукции таких производителей как XILINX, Intel (ex.ALTERA), Vicor, Microchip, Texas Instruments, Analog Devices, Mini-Circuits, Amphenol, Glenair.

Сотрудничество с глобальными дистрибьюторами электронных компонентов, предоставляет возможность заказывать и получать с международных складов практически любой перечень компонентов в оптимальные для Вас сроки.

На всех этапах разработки и производства наши партнеры могут получить квалифицированную поддержку опытных инженеров.

Система менеджмента качества компании отвечает требованиям в соответствии с ГОСТ Р ИСО 9001, ГОСТ РВ 0015-002 и ЭС РД 009

**Офис по работе с юридическими лицами:**

105318, г.Москва, ул.Щербаковская д.3, офис 1107, 1118, ДЦ «Щербаковский»

Телефон: +7 495 668-12-70 (многоканальный)

Факс: +7 495 668-12-70 (доб.304)

E-mail: info@moschip.ru

Skype отдела продаж:
moschip.ru
moschip.ru_4
moschip.ru_6
moschip.ru_9