COSEL AC-DC Power Supplies Open Frame/ Enclosed type

LEB100F

Ordering information

LEB	100	F	-05	24	-□
①	②	③	④	⑤	⑥

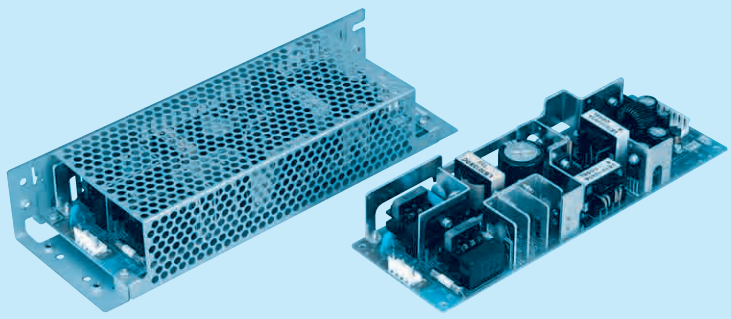

Recommended EMI/EMC Filter
NAC-06-472

High voltage pulse noise type : NAP series
Low leakage current type : NAM series
＊The EMI/EMC Filter is recommended to connect with several devices.

①Series name
②Output wattage
③Universal input
④V1 Output voltage
⑤V2 Output voltage
⑥Optional ＊1 ＊8
G :Low leakage current
R :with Remote ON/OFF
S :with Chassis
SN :with Chassis & cover
T :Vertical terminal block
Y :with Potentiometer
Z :with ZT

LEB

MODEL		LEB100F-0512	LEB100F-0324	LEB100F-0524	LEB100F-0530	LEB100F-0536
DC OUTPUT	V1	+5V 5A	+3.3V 5A	+5V 5A	+5V 5A	+5V 5A
	V2	+12V 5(Peak 10)A	+24V 4(Peak 7)A	+24V 4(Peak 7)A	+30V 3.2(Peak 5.6)A	+36V 2.7(Peak 4.7)A

SPECIFICATIONS

	MODEL		LEB100F-0512		LEB100F-0324		LEB100F-0524		LEB100F-0530		LEB100F-0536	
INPUT	VOLTAGE[V]		AC85 - 264 1φ or DC 120 - 370									
	CURRENT[A]	ACIN 100V	1.2typ (Io=100%)		1.4typ (Io=100%)							
		ACIN 200V	0.6typ (Io=100%)		0.7typ (Io=100%)							
	FREQUENCY[Hz]		50/60 (47 - 63) or DC									
	EFFICIENCY[%]	ACIN 100V	74typ (Io=100%)		78typ (Io=100%)		78typ (Io=100%)		78typ (Io=100%)		78typ (Io=100%)	
		ACIN 200V	76typ (Io=100%)		80typ (Io=100%)		80typ (Io=100%)		80typ (Io=100%)		80typ (Io=100%)	
	POWER FACTOR	ACIN 100V	0.98typ		0.99typ							
		ACIN 200V	0.93typ									
	INRUSH CURRENT[A]	ACIN 100V	15typ (Io=100%) (At cold start) (Ta=25℃)									
		ACIN 200V	30typ (Io=100%) (At cold start) (Ta=25℃)									
	LEAKAGE CURRENT[mA]		0.75max (60Hz, According to IEC60950 and DEN-AN)									
OUTPUT	VOLTAGE[V]		+5	+12	+3.3	+24	+5	+24	+5	+30	+5	+36
	CURRENT[A]	＊2	0 - 5	0 - 5 (Peak 10)	0 - 5	0 - 4 (Peak 7)	0 - 5	0 - 4 (Peak 7)	0 - 5	0 - 3.2 (Peak 5.6)	0 - 5	0 - 2.7 (Peak 4.7)
	TOTAL OUTPUT WATTAGE[W]	＊3	85 (Peak 145)		100 (Peak 172)		100 (Peak 172)		100 (Peak 172)		100 (Peak 172)	
	LINE REGULATION[mV]		20max	48max	20max	96max	20max	96max	20max	120max	20max	144max
	LOAD REGULATION[mV]		40max	100max	40max	150max	40max	150max	40max	180max	40max	180max
	RIPPLE[mVp-p]	0 to +50℃ ＊4	80max	120max	80max	120max	80max	120max	80max	200max	80max	200max
		-10 - 0℃ ＊4	140max	160max	140max	160max	140max	160max	140max	240max	140max	240max
	RIPPLE NOISE[mVp-p]	0 to +50℃ ＊4	120max	150max	120max	150max	120max	150max	120max	300max	120max	300max
		-10 - 0℃ ＊4	160max	180max	160max	180max	160max	180max	160max	360max	160max	360max
	TEMPERATURE REGULATION[mV]	0 to +50℃	50max	120max	50max	240max	50max	240max	50max	300max	50max	300max
		-10 to +50℃	60max	150max	60max	290max	60max	290max	60max	350max	60max	350max
	DRIFT[mV]	＊5	20max	48max	20max	96max	20max	96max	20max	120max	20max	144max
	START-UP TIME[ms]	＊6	250max	500max	250max	500max	250max	500max	250max	500max	250max	500max
	HOLD-UP TIME[ms]	＊6	40typ	20typ	40typ	20typ	40typ	20typ	40typ	20typ	40typ	20typ
	OUTPUT VOLTAGE ADJUSTMENT RANGE[V]		4.5 - 5.5	Fixed	2.85 - 3.60	Fixed	4.5 - 5.5	Fixed	4.5 - 5.5	Fixed	4.5 - 5.5	Fixed
	OUTPUT VOLTAGE SETTING[V]		——	11.5 - 12.5	——	23.0 - 25.0	——	23.0 - 25.0	——	28.7 - 31.5	——	34.5 - 37.5
PROTECTION CIRCUIT AND OTHERS	OVERCURRENT PROTECTION	V1	Works over 105% of rating current and recovers automatically									
		V2	Works over 101% of peak current and recovers automatically									
	OVERVOLTAGE PROTECTION	V1	Works over 115% of rating, by zener diode clamping									
		V2	Works at 115 - 140% of rating									
	REMOTE ON/OFF		Option (Refer to Instruction Manual)									
ISOLATION	INPUT-OUTPUT · RC	＊7	AC3,000V 1minute, Cutoff current = 10mA, DC500V 50MΩ min (At Room Temperature)									
	INPUT-FG		AC2,000V 1minute, Cutoff current = 10mA, DC500V 50MΩ min (At Room Temperature)									
	OUTPUT · RC-FG	＊7	AC500V 1minute, Cutoff current = 100mA, DC500V 50MΩ min (At Room Temperature)									
	OUTPUT-OUTPUT(V1 · RC-V2)	＊7	AC100V 1minute, Cutoff current = 100mA, DC100V 10MΩ min (At Room Temperature)									
ENVIRONMENT	OPERATING TEMP.,HUMID.AND ALTITUDE		-10 to +70℃, 20 - 90%RH (Non condensing) (Refer to DERATING CURVE), 3,000m (10,000feet) max									
	STORAGE TEMP.,HUMID.AND ALTITUDE		-20 to +75℃, 20 - 90%RH (Non condensing), 9,000m (30,000feet) max									
	VIBRATION		10 - 55Hz, 19.6m/s² (2G), 3minutes period, 60minutes each along X, Y and Z axis									
	IMPACT		196.1m/s² (20G), 11ms, once each X, Y and Z axis									
SAFETY AND NOISE REGULATIONS	AGENCY APPROVALS		UL60950-1, C-UL, EN60950-1, EN50178 Complies with DEN-AN and IEC60950-1 (At only AC input)									
	CONDUCTED NOISE		Complies with FCC-B, CISPR22-B, EN55022-B, VCCI-B									
	HARMONIC ATTENUATOR		Complies with IEC61000-3-2 ＊9									
OTHERS	CASE SIZE/WEIGHT		75×35×222mm [2.95×1.38×8.74 inches] (W×H×D) /420g max (with chassis & cover : 690g max)									
	COOLING METHOD		Convection									

＊1 Specification is changed at option, refer to Instruction Manual 5.
＊2 Peak loading for 10sec. And Duty 35% max, refer to Instruction Manual 4. In detail.
＊3 Refer to Instruction Manual 2.2 in detail.
＊4 This is the value that measured on measuring board with capacitor of 22μF within 150mm from output terminal.Measured by 20MHz oscilloscope or Ripple-Noise meter (Equivalent to KEISOKU-GIKEN: RM101).
＊5 Drift is the change in DC output for an eight hour period after a half-hour warm-up at 25℃, with the input voltage held constant at the rated input/output.
＊6 ACIN 100V,Io=100%
＊7 Applicable when remote control (optional) is added.
＊8 Please contact us about safety approvals for the model with option.
＊9 Please contact us about class C.
＊ Series/Parallel operation is not possible.
＊ Derating is required when operated with chassis and cover.
＊ A sound may occur from power supply at peak loading.

External view

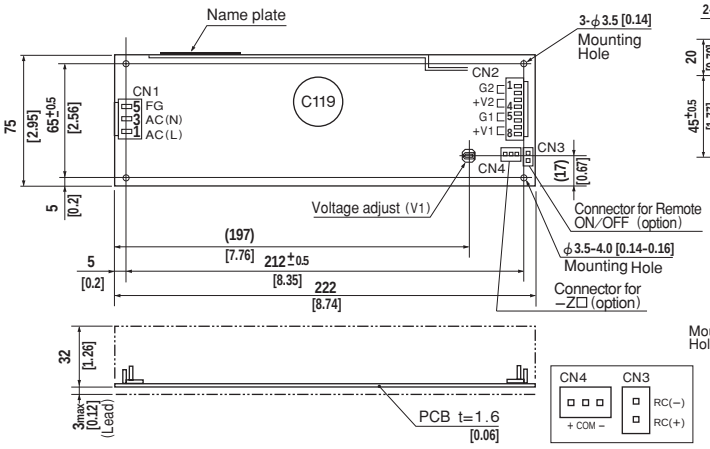

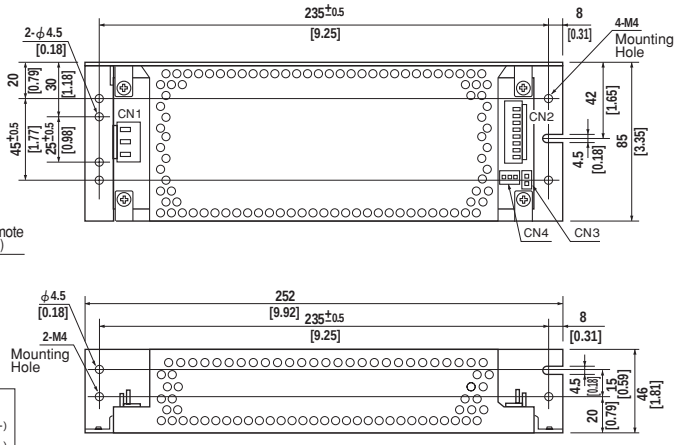

I / O Connector		Mating Connector	Terminal
CN1	B3P5-VH	VHR-5N	Chain : SVH-21T-P1.1
			Loose: BVH-21T-P1.1
CN2	B8P-VH	VHR-8N	Chain : SVH-21T-P1.1
			Loose: BVH-21T-P1.1
CN3 (Option)	B2B-XH-A	XHP-2	Chain : SXH-001T-P0.6
			Loose: BXH-001T-P0.6
CN4 (Option)	B3B-XH-A	XHP-3	Chain : SXH-001T-P0.6
			Loose: BXH-001T-P0.6

(Mfr: J.S.T.)

〈PIN CONNECTION〉

CN1

Pin No.	Input
1	AC(L)
2	
3	AC(N)
4	
5	FG

CN2

Pin No.	Output
1, 2	G 2
3, 4	V 2
5, 6	G 1
7, 8	V 1

CN3 (Option)

Pin No.	Remote ON/OFF
1	RC(+)
2	RC(−)

CN4 (Option)

Pin No.	−Z□
1	+
2	COM
3	−

※Keep drawing current per pin below 5A for CN2

※Weight: 420g max
(with chassis & cover : 690g max)
※Tolerance: ±1 [±0.04]
※Dimensions in mm, [ ]= inches
※PCB Material : CEM3
※Chassis and cover is optional.
※Mounting torque: 1.5N·m(16kgf·cm)max

Performance data

■RISE TIME & FALL TIME (LEB100F-0524)

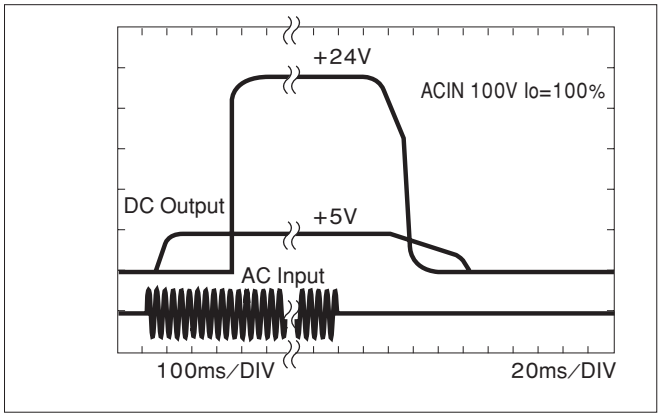

■EFFICIENCY (LEB100F-0524)

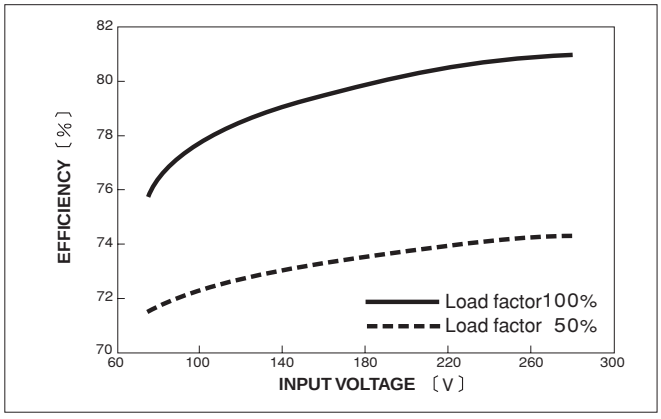

■INPUT HARMONIC CURRENT (LEB100F-0524)

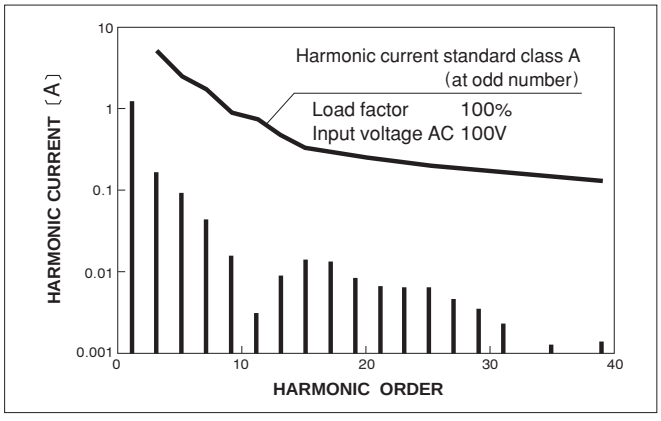

■INPUT HARMONIC CURRENT (LEB100F-0524)

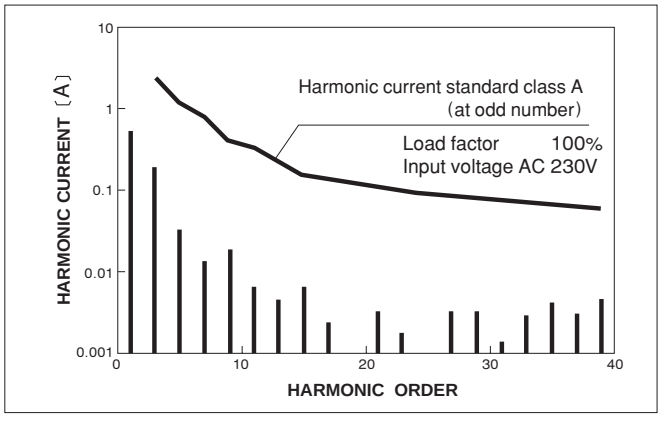

COSEL AC-DC Power Supplies Open Frame/ Enclosed type

LEB150F

Ordering information

LEB	150	F	-05	24	-□
①	②	③	④	⑤	⑥

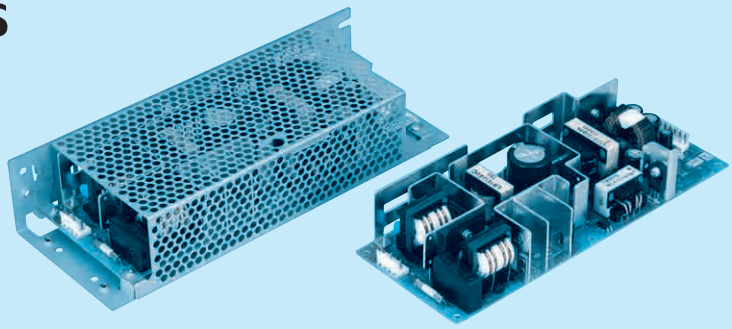

Recommended EMI/EMC Filter
NAC-06-472

High voltage pulse noise type : NAP series
Low leakage current type : NAM series
*The EMI/EMC Filter is recommended to connect with several devices.

①Series name
②Output wattage
③Universal input
④V1 Output voltage
⑤V2 Output voltage
⑥Optional *1 *8
G :Low leakage current
R :with Remote ON/OFF
S :with Chassis
SN :with Chassis & cover
T :Vertical terminal block
Y :with Potentiometer
Z :with ZT

LEB

MODEL		LEB150F-0512	LEB150F-0324	LEB150F-0524	LEB150F-0530	LEB150F-0536
DC OUTPUT	V1	+5V 5A	+3.3V 5A	+5V 5A	+5V 5A	+5V 5A
	V2	+12V 7.5(Peak 14)A	+24V 6(Peak 10)A	+24V 6(Peak 10)A	+30V 4.8(Peak 8)A	+36V 4(Peak 6.7)A

SPECIFICATIONS

	MODEL		LEB150F-0512		LEB150F-0324		LEB150F-0524		LEB150F-0530		LEB150F-0536	
INPUT	VOLTAGE[V]		AC85 - 264 1φ or DC 120 - 370									
	CURRENT[A]	ACIN 100V	1.6typ (Io=100%)		2.0typ (Io=100%)							
		ACIN 200V	0.8typ (Io=100%)		1.0typ (Io=100%)							
	FREQUENCY[Hz]		50/60 (47 - 63) or DC									
	EFFICIENCY[%]	ACIN 100V	76typ (Io=100%)		79typ (Io=100%)		79typ (Io=100%)		79typ (Io=100%)		79typ (Io=100%)	
		ACIN 200V	79typ (Io=100%)		82typ (Io=100%)		82typ (Io=100%)		82typ (Io=100%)		82typ (Io=100%)	
	POWER FACTOR	ACIN 100V	0.98typ		0.99typ							
		ACIN 200V	0.93typ									
	INRUSH CURRENT[A]	ACIN 100V	15typ (Io=100%) (At cold start) (Ta=25℃)									
		ACIN 200V	30typ (Io=100%) (At cold start) (Ta=25℃)									
	LEAKAGE CURRENT[mA]		0.75max (60Hz, According to IEC60950 and DEN-AN)									
OUTPUT	VOLTAGE[V]		+5	+12	+3.3	+24	+5	+24	+5	+30	+5	+36
	CURRENT[A]	*2	0 - 5	0 - 7.5 (Peak 14)	0 - 5	0 - 6 (Peak 10)	0 - 5	0 - 6 (Peak 10)	0 - 5	0 - 4.8 (Peak 8)	0 - 5	0 - 4 (Peak 6.7)
	TOTAL OUTPUT WATTAGE[W]	*3	115 (Peak 193)		150 (Peak 246)		150 (Peak 246)		150 (Peak 246)		150 (Peak 246)	
	LINE REGULATION[mV]		20max	48max	20max	96max	20max	96max	20max	120max	20max	144max
	LOAD REGULATION[mV]		40max	100max	40max	150max	40max	150max	40max	180max	40max	180max
	RIPPLE[mVp-p]	0 to +45℃ *4	80max	120max	80max	120max	80max	120max	80max	200max	80max	200max
		-10 - 0℃ *4	140max	160max	140max	160max	140max	160max	140max	240max	140max	240max
	RIPPLE NOISE[mVp-p]	0 to +45℃ *4	120max	150max	120max	150max	120max	150max	120max	300max	120max	300max
		-10 - 0℃ *4	160max	180max	160max	180max	160max	180max	160max	360max	160max	360max
	TEMPERATURE REGULATION[mV]	0 to +45℃	50max	120max	50max	240max	50max	240max	50max	300max	50max	300max
		-10 to +45℃	60max	150max	60max	290max	60max	290max	60max	350max	60max	350max
	DRIFT[mV]	*5	20max	48max	20max	96max	20max	96max	20max	120max	20max	144max
	START-UP TIME[ms]	*6	250max	500max	250max	500max	250max	500max	250max	500max	250max	500max
	HOLD-UP TIME[ms]	*6	40typ	20typ	40typ	20typ	40typ	20typ	40typ	20typ	40typ	20typ
	OUTPUT VOLTAGE ADJUSTMENT RANGE[V]		4.5 - 5.5	Fixed	2.85 - 3.60	Fixed	4.5 - 5.5	Fixed	4.5 - 5.5	Fixed	4.5 - 5.5	Fixed
	OUTPUT VOLTAGE SETTING[V]		——	11.5 - 12.5	——	23.0 - 25.0	——	23.0 - 25.0	——	28.7 - 31.5	——	34.5 - 37.5
PROTECTION CIRCUIT AND OTHERS	OVERCURRENT PROTECTION	V1	Works over 105% of rating current and recovers automatically									
		V2	Works over 101% of peak current and recovers automatically									
	OVERVOLTAGE PROTECTION	V1	Works over 115% of rating, by zener diode clamping									
		V2	Works at 115 - 140% of rating									
	REMOTE ON/OFF		Option (Refer to Instruction Manual)									
ISOLATION	INPUT-OUTPUT · RC	*7	AC3,000V 1minute, Cutoff current = 10mA, DC500V 50MΩ min (At Room Temperature)									
	INPUT-FG		AC2,000V 1minute, Cutoff current = 10mA, DC500V 50MΩ min (At Room Temperature)									
	OUTPUT · RC-FG	*7	AC500V 1minute, Cutoff current = 100mA, DC500V 50MΩ min (At Room Temperature)									
	OUTPUT-OUTPUT(V1 · RC-V2)	*7	AC100V 1minute, Cutoff current = 100mA, DC100V 10MΩ min (At Room Temperature)									
ENVIRONMENT	OPERATING TEMP.,HUMID.AND ALTITUDE		-10 to +70℃, 20 - 90%RH (Non condensing) (Refer to DERATING CURVE), 3,000m (10,000feet) max									
	STORAGE TEMP.,HUMID.AND ALTITUDE		-20 to +75℃, 20 - 90%RH (Non condensing), 9,000m (30,000feet) max									
	VIBRATION		10 - 55Hz, 19.6m/s² (2G), 3minutes period, 60minutes each along X, Y and Z axis									
	IMPACT		196.1m/s² (20G), 11ms, once each X, Y and Z axis									
SAFETY AND NOISE REGULATIONS	AGENCY APPROVALS		UL60950-1, C-UL, EN60950-1, EN50178 Complies with DEN-AN and IEC60950-1 (At only AC input)									
	CONDUCTED NOISE		Complies with FCC-B, CISPR22-B, EN55022-B, VCCI-B									
	HARMONIC ATTENUATOR		Complies with IEC61000-3-2 *9									
OTHERS	CASE SIZE/WEIGHT		85×40×222mm [3.35×1.57×8.74 inches] (W×H×D) /530g max (with chassis & cover : 870g max)									
	COOLING METHOD		Convection									

*1 Specification is changed at option, refer to Instruction Manual 5.
*2 Peak loading for 10sec. And Duty 35% max, refer to Instruction Manual 4. In detail.
*3 Refer to Instruction Manual 2.2 in detail.
*4 This is the value that measured on measuring board with capacitor of 22μF within 150mm from output terminal.Measured by 20MHz oscilloscope or Ripple-Noise meter (Equivalent to KEISOKU-GIKEN: RM101).
*5 Drift is the change in DC output for an eight hour period after a half-hour warm-up at 25℃, with the input voltage held constant at the rated input/output.
*6 ACIN 100V,Io=100%
*7 Applicable when remote control (optional) is added.
*8 Please contact us about safety approvals for the model with option.
*9 Please contact us about class C.
* Series/Parallel operation is not possible.
* Derating is required when operated with chassis and cover.
* A sound may occur from power supply at peak loading.

External view

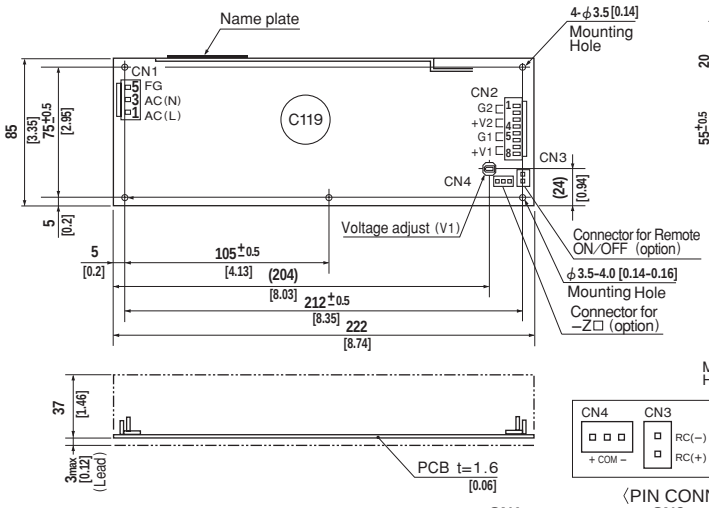

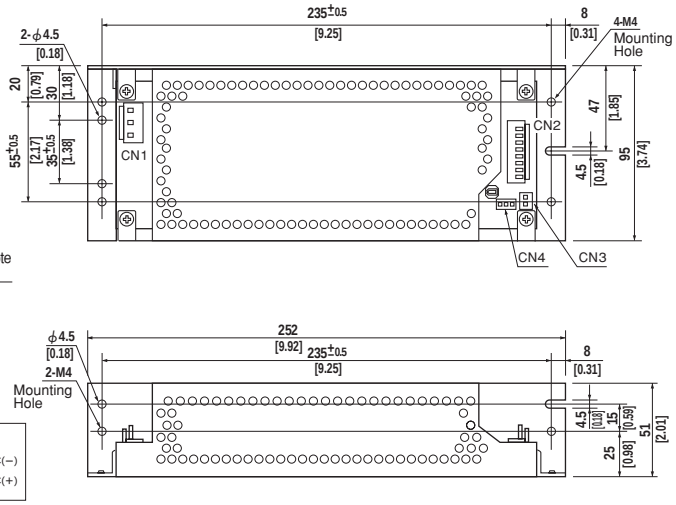

〈PIN CONNECTION〉

I / O Connector		Mating Connector	Terminal
CN1	B3P5-VH	VHR-5N	Chain: SVH-21T-P1.1
			Loose: BVH-21T-P1.1
CN2	B8P-VH	VHR-8N	Chain: SVH-21T-P1.1
			Loose: BVH-21T-P1.1
CN3 (Option)	B2B-XH-A	XHP-2	Chain: SXH-001T-P0.6
			Loose: BXH-001T-P0.6
CN4 (Option)	B3B-XH-A	XHP-3	Chain: SXH-001T-P0.6
			Loose: BXH-001T-P0.6

(Mfr: J.S.T.)

CN1

Pin No.	Input
1	AC(L)
2	
3	AC(N)
4	
5	FG

CN2

Pin No.	Output
1, 2	G 2
3, 4	V 2
5, 6	G 1
7, 8	V 1

CN3 (Option)

Pin No.	Remote ON/OFF
1	RC(+)
2	RC(−)

CN4 (Option)

Pin No.	−Z□
1	+
2	COM
3	−

※Weight: 530g max
(with chassis & cover : 870g max)
※Tolerance: ±1 [±0.04]
※Dimensions in mm, [ ]= inches
※PCB Material : CEM3
※Chassis and cover is optional.
※Mounting torque: 1.5N·m(16kgf·cm)max

※Keep drawing current per pin below 5A(7A at peak load)for CN2

Performance data

■RISE TIME & FALL TIME (LEB150F-0524)

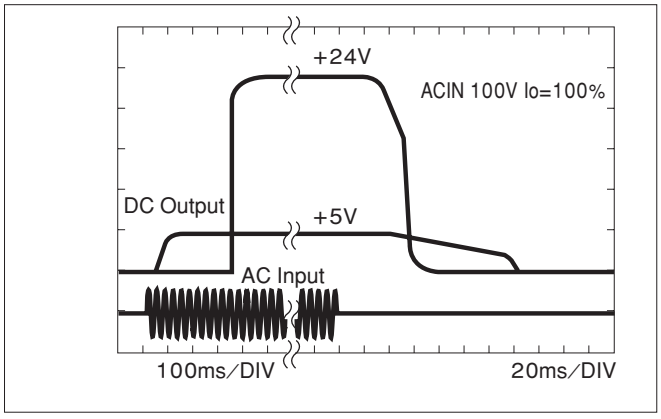

■EFFICIENCY (LEB150F-0524)

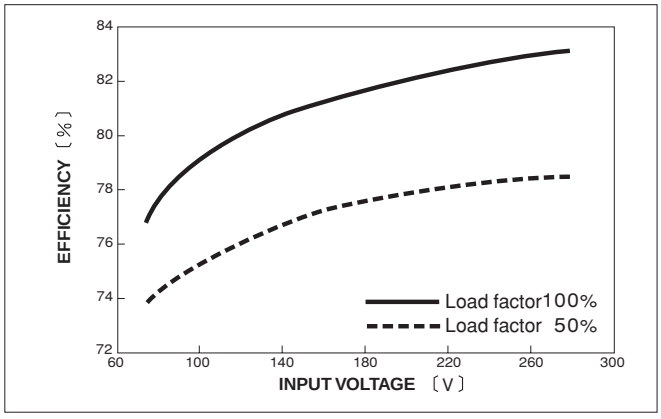

■INPUT HARMONIC CURRENT (LEB150F-0524)

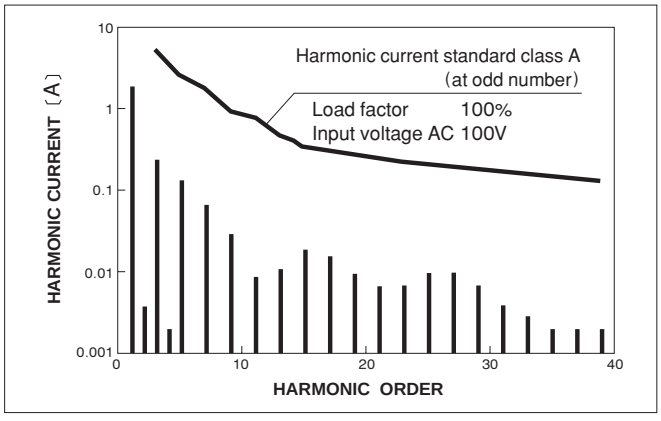

■INPUT HARMONIC CURRENT (LEB150F-0524)

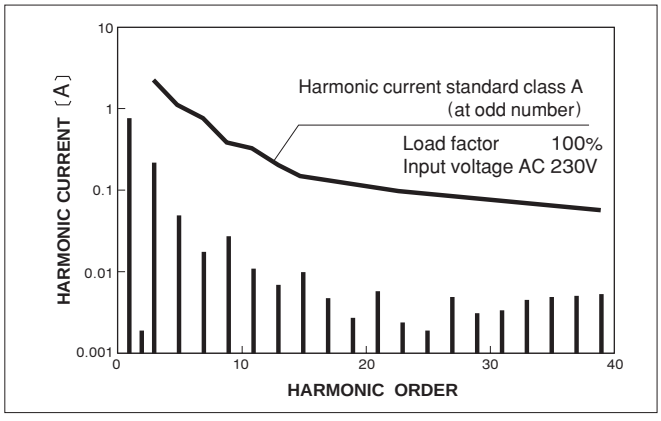

COSEL AC-DC Power Supplies Open Frame/ Enclosed type

LEB225F

Ordering information

LEB	225	F	-05	24	-□
①	②	③	④	⑤	⑥

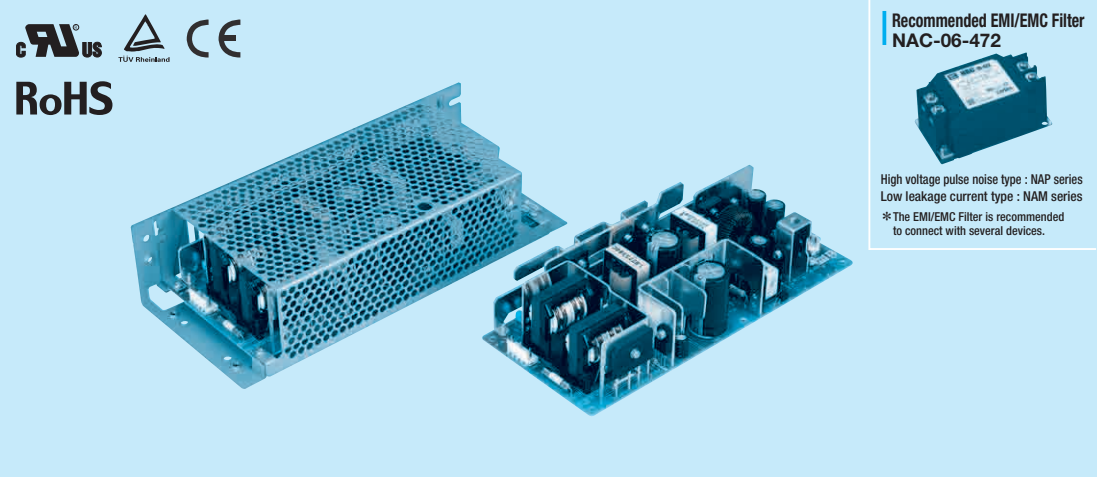

Recommended EMI/EMC Filter
NAC-06-472

High voltage pulse noise type : NAP series
Low leakage current type : NAM series
*The EMI/EMC Filter is recommended to connect with several devices.

①Series name
②Output wattage
③Universal input
④V1 Output voltage
⑤V2 Output voltage
⑥Optional *1 *8
G :Low leakage current
R :with Remote ON/OFF
S :with Chassis
SN :with Chassis & cover
T :Vertical terminal block
Y :with Potentiometer
Z :with ZT

LEB

MODEL		LEB225F-0512	LEB225F-0324	LEB225F-0524	LEB225F-0530	LEB225F-0536
DC OUTPUT	V1	+5V 5A	+3.3V 5A	+5V 5A	+5V 5A	+5V 5A
	V2	+12V 10(Peak 20)A	+24V 9(Peak 14)A	+24V 9(Peak 14)A	+30V 7.2(Peak 11)A	+36V 6(Peak 9.3)A

SPECIFICATIONS

	MODEL		LEB225F-0512		★LEB225F-0324		LEB225F-0524		LEB225F-0530		★LEB225F-0536	
INPUT	VOLTAGE[V]		AC85 - 264 1φ or DC 120 - 370									
	CURRENT[A]	ACIN 100V	1.9typ (Io=100%)		3.0typ (Io=100%)							
		ACIN 200V	1.0typ (Io=100%)		1.5typ (Io=100%)							
	FREQUENCY[Hz]		50/60 (47 - 63) or DC									
	EFFICIENCY[%]	ACIN 100V	77typ (Io=100%)		81typ (Io=100%)		81typ (Io=100%)		81typ (Io=100%)		81typ (Io=100%)	
		ACIN 200V	79typ (Io=100%)		83typ (Io=100%)		83typ (Io=100%)		83typ (Io=100%)		83typ (Io=100%)	
	POWER FACTOR	ACIN 100V	0.98typ		0.99typ							
		ACIN 200V	0.93typ									
	INRUSH CURRENT[A]	ACIN 100V	15typ (Io=100%) (More than 3sec.to re-start)									
		ACIN 200V	30typ (Io=100%) (More than 3sec.to re-start)									
	LEAKAGE CURRENT[mA]		0.75max (60Hz, According to IEC60950 and DEN-AN)									
OUTPUT	VOLTAGE[V]		+5	+12	+3.3	+24	+5	+24	+5	+30	+5	+36
	CURRENT[A]	*2	0 - 5	0 - 10 (Peak 20)	0 - 5	0 - 9 (Peak 14)	0 - 5	0 - 9 (Peak 14)	0 - 5	0 - 7.2 (Peak 11)	0 - 5	0 - 6 (Peak 9.3)
	TOTAL OUTPUT WATTAGE[W]	*3	145 (Peak 265)		225 (Peak 345)		225 (Peak 345)		225 (Peak 345)		225 (Peak 345)	
	LINE REGULATION[mV]		20max	48max	20max	96max	20max	96max	20max	120max	20max	144max
	LOAD REGULATION[mV]		40max	100max	40max	150max	40max	150max	40max	180max	40max	180max
	RIPPLE[mVp-p]	0 to +40℃ *4	80max	120max	80max	120max	80max	120max	80max	200max	80max	200max
		-10 - 0℃ *4	140max	160max	140max	160max	140max	160max	140max	240max	140max	240max
	RIPPLE NOISE[mVp-p]	0 to +40℃ *4	120max	150max	120max	150max	120max	150max	120max	300max	120max	300max
		-10 - 0℃ *4	160max	180max	160max	180max	160max	180max	160max	360max	160max	360max
	TEMPERATURE REGULATION[mV]	0 to +40℃	50max	120max	50max	240max	50max	240max	50max	300max	50max	300max
		-10 to +40℃	60max	150max	60max	290max	60max	290max	60max	350max	60max	350max
	DRIFT[mV]	*5	20max	48max	20max	96max	20max	96max	20max	120max	20max	144max
	START-UP TIME[ms]	*6	250max	500max	250max	500max	250max	500max	250max	500max	250max	500max
	HOLD-UP TIME[ms]	*6	40typ	20typ	40typ	20typ	40typ	20typ	40typ	20typ	40typ	20typ
	OUTPUT VOLTAGE ADJUSTMENT RANGE[V]		4.5 - 5.5	Fixed	2.85 - 3.60	Fixed	4.5 - 5.5	Fixed	4.5 - 5.5	Fixed	4.5 - 5.5	Fixed
	OUTPUT VOLTAGE SETTING[V]		——	11.5 - 12.5	——	23.0 - 25.0	——	23.0 - 25.0	——	28.7 - 31.5	——	34.5 - 37.5
PROTECTION CIRCUIT AND OTHERS	OVERCURRENT PROTECTION	V1	Works over 105% of rating current and recovers automatically									
		V2	Works over 101% of peak current and recovers automatically									
	OVERVOLTAGE PROTECTION	V1	Works over 115% of rating, by zener diode clamping									
		V2	Works at 115 - 140% of rating									
	REMOTE ON/OFF		Option (Refer to Instruction Manual)									
ISOLATION	INPUT-OUTPUT · RC	*7	AC3,000V 1minute, Cutoff current = 10mA, DC500V 50MΩ min (At Room Temperature)									
	INPUT-FG		AC2,000V 1minute, Cutoff current = 10mA, DC500V 50MΩ min (At Room Temperature)									
	OUTPUT · RC-FG	*7	AC500V 1minute, Cutoff current = 100mA, DC500V 50MΩ min (At Room Temperature)									
	OUTPUT-OUTPUT(V1 · RC-V2)	*7	AC100V 1minute, Cutoff current = 100mA, DC100V 10MΩ min (At Room Temperature)									
ENVIRONMENT	OPERATING TEMP.,HUMID.AND ALTITUDE		-10 to +70℃, 20 - 90%RH (Non condensing) (Refer to DERATING CURVE), 3,000m (10,000feet) max									
	STORAGE TEMP.,HUMID.AND ALTITUDE		-20 to +75℃, 20 - 90%RH (Non condensing), 9,000m (30,000feet) max									
	VIBRATION		10 - 55Hz, 19.6m/s² (2G), 3minutes period, 60minutes each along X, Y and Z axis									
	IMPACT		196.1m/s² (20G), 11ms, once each X, Y and Z axis									
SAFETY AND NOISE REGULATIONS	AGENCY APPROVALS		UL60950-1, C-UL, EN60950-1, EN50178 Complies with DEN-AN and IEC60950-1 (At only AC input)									
	CONDUCTED NOISE		Complies with FCC-B, CISPR22-B, EN55022-B, VCCI-B									
	HARMONIC ATTENUATOR		Complies with IEC61000-3-2 *9									
OTHERS	CASE SIZE/WEIGHT		95×45×222mm [3.74×1.77×8.74 inches] (W×H×D) /700g max (with chassis & cover : 1,080g max)									
	COOLING METHOD		Convection									

*1 Specification is changed at option, refer to Instruction Manual 5.
*2 Peak loading for 10sec. And Duty 35% max, refer to Instruction Manual 4. In detail.
*3 Refer to Instruction Manual 2.2 in detail.
*4 This is the value that measured on measuring board with capacitor of 22μF within 150mm from output terminal.Measured by 20MHz oscilloscope or Ripple-Noise meter (Equivalent to KEISOKU-GIKEN: RM101).
*5 Drift is the change in DC output for an eight hour period after a half-hour warm-up at 25℃, with the input voltage held constant at the rated input/output.
*6 ACIN 100V,Io=100%
*7 Applicable when remote control (optional) is added.
*8 Please contact us about safety approvals for the model with option.
*9 Please contact us about class C.
* Series/Parallel operation is not possible.
* Derating is required when operated with chassis and cover.
* A sound may occur from power supply at peak loading.
★marked models are pending for safety approvals. Consult with us for delivery.

External view

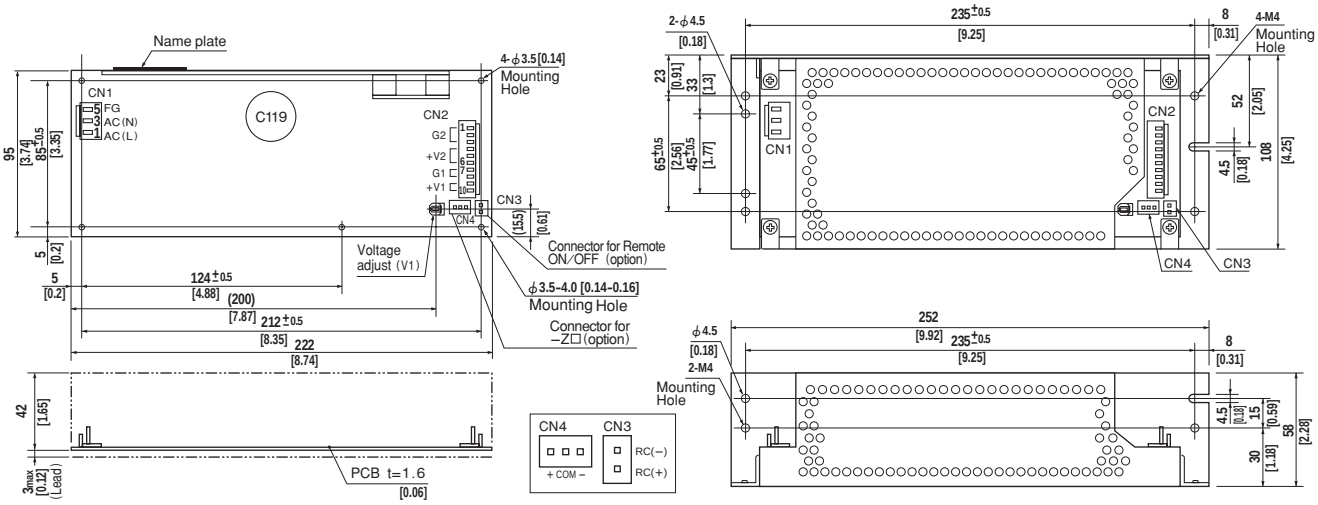

〈PIN CONNECTION〉

I / O Connector		Mating Connector	Terminal
CN1	B3P5-VH	VHR-5N	Chain: SVH-21T-P1.1
			Loose: BVH-21T-P1.1
CN2	B10P-VH	VHR-10N	Chain: SVH-21T-P1.1
			Loose: BVH-21T-P1.1
CN3 (Option)	B2B-XH-A	XHP-2	Chain: SXH-001T-P0.6
			Loose: BXH-001T-P0.6
CN4 (Option)	B3B-XH-A	XHP-3	Chain: SXH-001T-P0.6
			Loose: BXH-001T-P0.6

(Mfr: J.S.T.)

CN1

Pin No.	Input
1	AC(L)
2	
3	AC(N)
4	
5	FG

CN2

Pin No.	Output
1, 2, 3	G 2
4, 5, 6	V 2
7, 8	G 1
9, 10	V 1

CN3 (Option)

Pin No.	Remote ON/OFF
1	RC(+)
2	RC(−)

CN4 (Option)

Pin No.	−Z□
1	+
2	COM
3	−

※Weight: 700g max
(with chassis & cover : 1,080g max)
※Tolerance: ±1 [±0.04]
※Dimensions in mm, [ ]= inches
※PCB Material : CEM3
※Chassis and cover is optional.
※Mounting torque: 1.5N·m(16kgf·cm)max

※Keep drawing current per pin below 5A (7A at peak load) for CN2

Performance data

■RISE TIME & FALL TIME (LEB225F-0524)

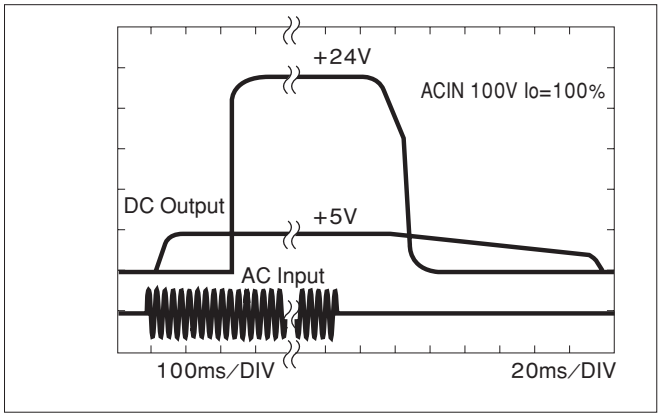

■EFFICIENCY (LEB225F-0524)

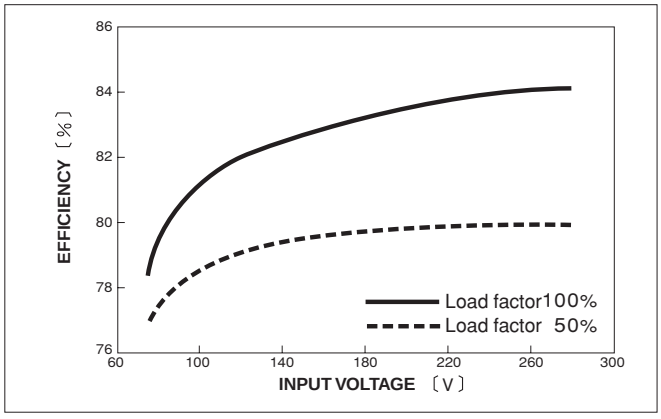

■INPUT HARMONIC CURRENT (LEB225F-0524)

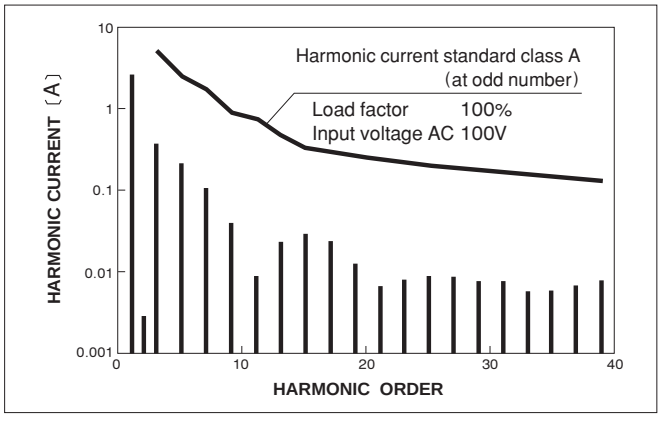

■INPUT HARMONIC CURRENT (LEB225F-0524)

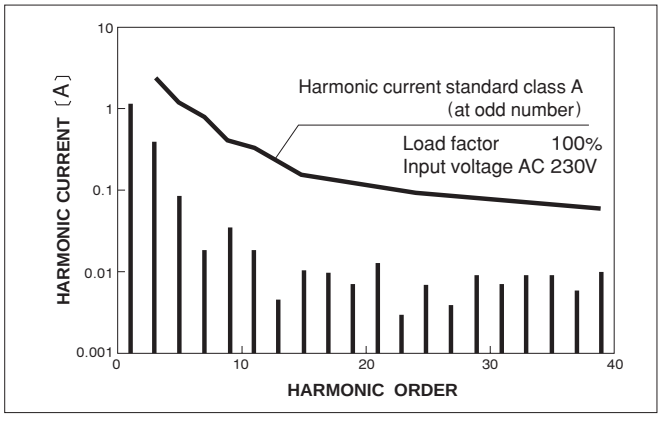

Mouser Electronics

Authorized Distributor

Click to View Pricing, Inventory, Delivery & Lifecycle Information:

Cosel:

LEB100F-0512-SNT LEB100F-0524-Z32 LEB100F-0524-Z34 LEB150F-0524-RY LEB225F-0524-SN LEB225F-0524-SNY LEB225F-0524-RY LEB225F-0536-SN LEB225F-0324-SN LEB225F-0324-SNT LEB225F-0324-T LEB225F-0512-TY LEB225F-0524 LEB150F-0536 LEB225F-0324 LEB225F-0524-S LEB225F-0524-SNR LEB225F-0524-T LEB225F-0530 LEB150F-0512-S LEB150F-0524-SN LEB150F-0524-SNY LEB150F-0524-SNZ31 LEB150F-0524-SNZ35 LEB150F-0524-U LEB100F-0524-RY LEB100F-0524-SNY LEB100F-0524-SZ32 LEB100F-0524-SZ35 LEB100F-0524-T LEB100F-0536-SNT LEB100F-0512-C LEB100F-0512-SNRT LEB100F-0512-SNZ25 LEB100F-0512-SZ22 LEB100F-0512-Z21 LEB100F-0524-GR LEB100F-0524-SNZ32 LEB100F-0524-SR LEB100F-0536-RY LEB100F-0536-SN LEB100F-0536-Y LEB100F-0512 LEB100F-0512-SZ23 LEB100F-0512-SZ25 LEB100F-0512-Y LEB100F-0524-G LEB100F-0524-RT LEB100F-0524-SN LEB225F-0536-R LEB100F-0324-T LEB100F-0324-Y LEB100F-0512-GR LEB100F-0512-SNY LEB100F-0512-SZ21 LEB225F-0524-SNC LEB225F-0524-SNGT LEB225F-0524-SNT LEB225F-0524-SNZ35 LEB225F-0530-S LEB225F-0536 LEB225F-0512-SNZ25 LEB225F-0512-Y LEB225F-0524-CR LEB225F-0524-CY LEB225F-0524-G LEB225F-0524-R LEB150F-0524-Y LEB150F-0524-Z34 LEB150F-0530 LEB150F-0536-SN LEB225F-0512-SN LEB225F-0512-SNR LEB150F-0512-SNT LEB150F-0512-Z25 LEB150F-0524-S LEB150F-0524-SNRT LEB150F-0524-SNT LEB150F-0524-TY LEB225F-0524-SZ35 LEB225F-0524-TY LEB225F-0524-U LEB225F-0524-Y LEB150F-0512-G LEB150F-0512-R LEB100F-0530-Y LEB100F-0536-C LEB100F-0536-R LEB225F-0524-CRY LEB225F-0524-GY LEB225F-0524-SNG LEB100F-0524-ST LEB100F-0524-SZ31 LEB100F-0524-SZ34 LEB100F-0524-U LEB100F-0524-Y LEB100F-0524-Z35 LEB100F-0524-CT LEB100F-0524-GT LEB100F-0524-R

Общество с ограниченной ответственностью «МосЧип» ИНН 7719860671 / КПП 771901001
Адрес: 105318, г.Москва, ул.Щербаковская д.3, офис 1107

Данный компонент на территории Российской Федерации

Вы можете приобрести в компании MosChip.

Для оперативного оформления запроса Вам необходимо перейти по данной ссылке:

http://moschip.ru/get-element

Вы можете разместить у нас заказ для любого Вашего проекта, будь то серийное производство или разработка единичного прибора.

В нашем ассортименте представлены ведущие мировые производители активных и пассивных электронных компонентов.

Нашей специализацией является поставка электронной компонентной базы двойного назначения, продукции таких производителей как XILINX, Intel (ex.ALTERA), Vicor, Microchip, Texas Instruments, Analog Devices, Mini-Circuits, Amphenol, Glenair.

Сотрудничество с глобальными дистрибьюторами электронных компонентов, предоставляет возможность заказывать и получать с международных складов практически любой перечень компонентов в оптимальные для Вас сроки.

На всех этапах разработки и производства наши партнеры могут получить квалифицированную поддержку опытных инженеров.

Система менеджмента качества компании отвечает требованиям в соответствии с ГОСТ Р ИСО 9001, ГОСТ РВ 0015-002 и ЭС РД 009

Офис по работе с юридическими лицами:

105318, г.Москва, ул.Щербаковская д.3, офис 1107, 1118, ДЦ «Щербаковский»

Телефон: +7 495 668-12-70 (многоканальный)

Факс: +7 495 668-12-70 (доб.304)

E-mail: info@moschip.ru

Skype отдела продаж:
moschip.ru
moschip.ru_4
moschip.ru_6
moschip.ru_9