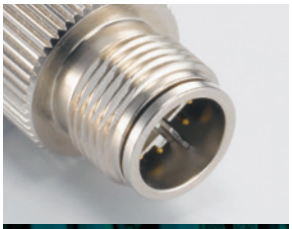

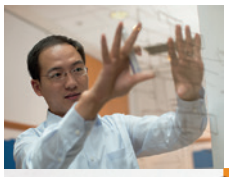

M8/M12 CONNECTOR SYSTEM

TE CONNECTIVITY'S M8 / M12

Connector System for machine industrial automation and control applications provides a solution for the increasing needs of sensor connections that safely and reliably ensures the communication in industrial environments. This connector system also finds applications outside of its traditional industries where a compact reliable connection system with environmental protection is required. TE's solution includes an extensive connector range of PCB headers, cable assemblies and I/O boxes, and provides users with an interface that supports higher bandwidth needs – meeting the requirements of up to 10Gb/s.

TE Connectivity also offers shielded and un-shielded Cat5e and Cat6A cable assembly variants. A predefined offering in length of 1, 3, 5 and 10 meters covers a vast range of customer needs on the market. For rewiring on site a range of field serviceable connectors are provided, allowing versatile systems to be quickly and easily established. Additional styles are available on request including alternative mounting arrangements for panel mount connectors and double ended cable assemblies.

TE'S INDUSTRIAL COMMUNICATIONS PRODUCTS PLAY A VITAL ROLE IN FACTORY AUTOMATION.

TE's industrial Communications products are widespread throughout today's networked factories, and play a critical role in driving the efficiency of many manufacturing processes. Used extensively in material handling equipment, our industrial communications solutions are also found throughout the automotive and food and beverage industries, as well as in the many manufacturing applications of industrial robots. With the development of smaller industrial Ethernet products, TE's solutions are also ideal for vision systems, common in security equipment and mail sortation devices.

TE M8/M12 CONNECTOR SYSTEM – APPLICATIONS

MACHINERY

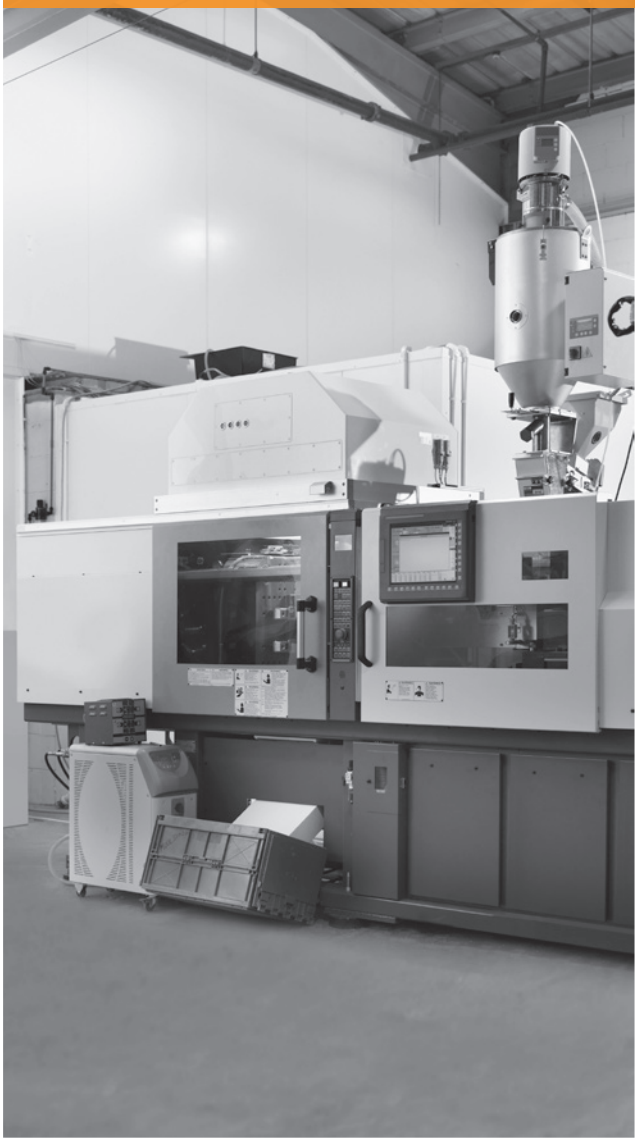

FACTORY AUTOMATION

TE's M8/M12 Connector System includes a broad range of straight, angled, LED and multi-position field installable and board connectors that are easily intermateable. Next to cable assemblies for Serial and Bus communication, TE also offers Industrial Ethernet patch cables with overmolded X-coded M12 connectors that are available for future proof applications with up to 10 Gb/s data transmission. Customized cable assemblies offer a solution for your specific needs in different lengths, temperatures or flexibility. When communication simply needs to work in industrial environments, TE's M8/M12 system and complete Industrial Communications portfolio offer proven reliability that meet industry standards. Whether it is for controllers and sensors or robotics and molding machines, the M8/M12 connector system offers you a solution that is time-saving, error-free and without the use of tools.

CONTENTS

CONNECTORS 5

- M8 Field Installable 7
- M8 Field Installable – Screw Assy 8-9
- M12 Straight Field Installable A, B, D Code 10-11
- M12 Angled Field Installable A, B, D Code 12-13
- M12 Straight Field Installable 14-15
- M12 Angled Field Installable 16-17
- M8 Panel Mount Solder PCB 18-19
- M8 Panel Mount Wire 20
- M12 Panel Mount Solder PCB 21-23
- M12 Panel Mount PCB 24-25
- M12 Panel Mount Solder Wire 26-27
- M12 Panel Mount 200 mm Wire 28-29
- M12 Panel Mount Wire 30
- M12 X-Coded Field Installable 31
- Accessories 32-33

CABLE ASSEMBLIES 34

- M8 Series Male 35
- M8 Series Female 36
- M12 Series Male Straight 37
- M12 Series Female Straight 38
- M12 Series Male Angled 39
- M12 Series Female Angled 40
- M12 Series Male to Female Y-cables 41
- M8 Male to M12 Female Series 41
- M8 Female to M12 Male Series 41
- M12 Male to M12 Female Series 42
- M8 Female to M8 Male Series LED 43
- M12 Female to M12 Male Series LED 43
- Cable Assembly Notes 44

I/O MODULES 45

- M8 – With Cable 46
- M8 – With M12 Plug Connection 47
- M8 – For Homerun Connection 47
- M12 – With Cable 48
- M12 – With M12/M23 Plug Connection 48
- M12 – No Cable/With Cable Gland 49
- I/O Module Notes 50

- M8/M12 Website 51

M8/M12 CONNECTORS

TE's M8/M12 connectors continues to fill the ongoing needs for sensor connection in Industrial Machinery and Factory Automation. A connection standard for many years, these products also find applications outside of their traditional industries where a compact reliable connection system with environmental protection is required. TE's M8/M12 connector portfolio includes A, B, D, S, T, and X-coded (up to 10 Gb/s) versions to serve various customer needs.

The connectors are also available in shielded and unshielded versions, to support Gigabit Ethernet applications.

M8/M12 – THE CODINGS

A-coding:	Actuator-sensor plug connections for DeviceNet, IO link and Profibus	
B-coding:	Fieldbus connections for Profibus and Interbus	
D-coding:	Industrial Ethernet, Profinet, Ethernet/IP and EtherCat	
S-coding:	Motor, Frequency-convertors, motor operated switches, PSUs for Power, 620 V, 12 A	
T-coding:	Fieldbus comp, passive distribution boxes, motors, PSUs for Power, 63 V, 12 A	
X-coding:	Cat6A, high-speed 10Gbit rugged industrial Ethernet applications IEC 61076-2-109	

Ambient temperature for M8:
-40 °C to 85 °C
Ambient temperature for M12:
-40 °C to 85 °C
Current rating:
4 and 5 pins: 4 A per pin
8 and 12 pins: 2 A per pin
IP rating: IP67/IP68

As specifications vary for different parts, please refer to your TE contact for detailed information.

Application Specifications for M8 M12 Connectors and Cable Assemblies:
114-32127, 114-137008, 114-137144

Product Specifications:
Connectors: 108-3641, 108-19483, 108-106140
X-coded: 108-137008

Size	Pins	Rated	Maximum Current per pin	Polution grade
M8	3	60 V	4 A	3
M8	4	30 V	4 A	3
M12	3	250 V	4 A	3
M12	4	250 V	4 A	3
M12	5	125 V	4 A	3
M12	8	60 V	2 A	3
M12	12	30 V	2 A	3

TE Part Number Definition

M12 Screw type connector PN

T 4 1 1 X X X X XX X - XXX

Sequence number:
000 (default)

Contact plating:
1: Gold (3u")
2: Silver

Number of Contacts:
02: 2 poles
03: 3 poles
...

Cable Outlet Types:
1: PG7
2: PG9

Body Material Type:
0: Plastic
1: Metal

Code Type:
0: A code
4: B code
5: D code

Application Type:
0: Straight Female
1: Straight Male
2: Right Angle Female
3: Right Angle Male

M8 Field Installable

Male Series

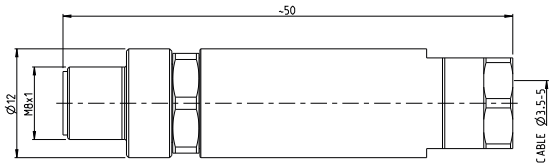

Female Series

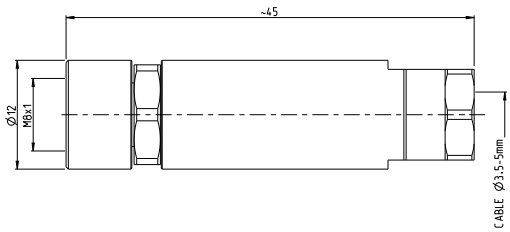

All dimensions in mm. Temperature range: -40 to +85 degree.

		TE Part Number
M8 Male Screw Connection, Straight		
3-Pole	PG7	2120954-1
4-Pole	PG7	1-2120954-1

M8 Male Right Angle		
3-Pole	PG7	2120955-1
4-Pole	PG7	1-2120955-1

M8 Male Panel, Solder, Front Mounting, M8 Fastening Thread		
3-Pole	M8	2120958-1
4-Pole	M8	1-2120958-1

		TE Part Number
M8 Female Screw Connection, Straight		
3-Pole	PG7	2120956-1
4-Pole	PG7	1-2120956-1

M8 Female Right Angle		
3-Pole	PG7	2120957-1
4-Pole	PG7	1-2120957-1

M8 Female Panel, Solder, Front Mounting, M8 Fastening Thread		
3-Pole	M8	2120959-1
4-Pole	M8	1-2120959-1

M8 Field Installable – Screw Assy Straight

Male Series

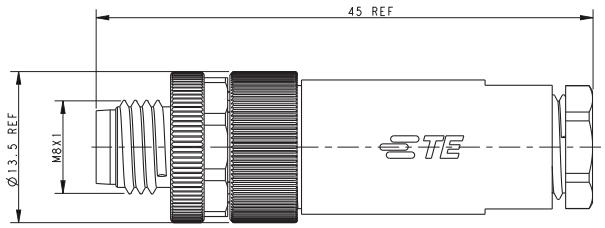

Female Series

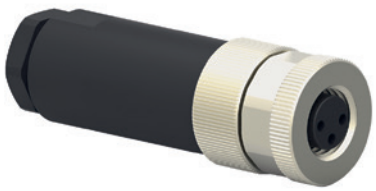

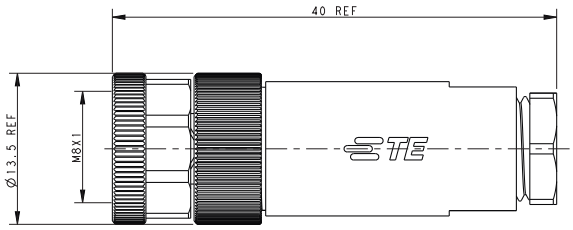

All dimensions in mm. Temperature range: -40 to +85 degree. Products can also be obtained with silver-plated contacts upon request.

	TE Part Number
M8 Male Screw Connection, Straight, Unshielded	
3-Pole	T4011008031-000
4-Pole	T4011008041-000

	TE Part Number
M8 Female Screw Connection, Straight, Unshielded	
3-Pole	T4010008031-000
4-Pole	T4010008041-000

M8 Male Screw Connection, Straight, Shielded	
3-Pole	T4011019031-000
4-Pole	T4011019041-000

M8 Female Screw Connection, Straight, Shielded	
3-Pole	T4010019031-000
4-Pole	T4010019041-000

M8 Field Installable – Screw Assy Right Angled

Male Series

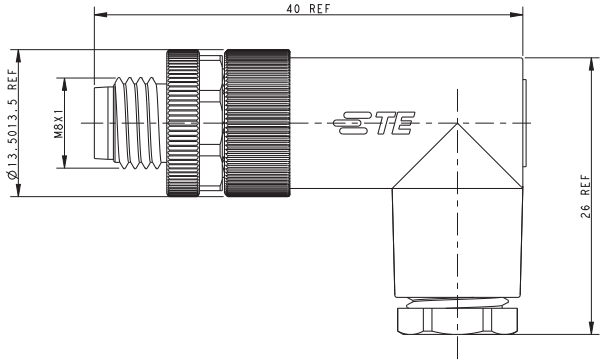

Female Series

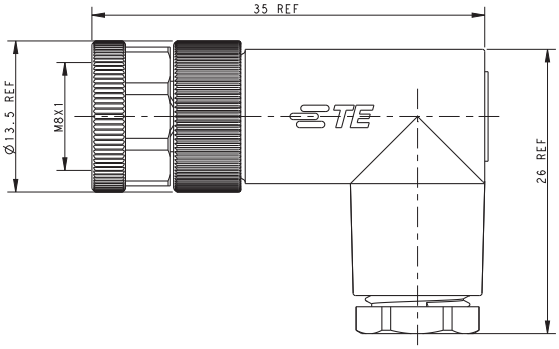

All dimensions in mm. Temperature range: -40 to +85 degree. Products can also be obtained with silver-plated contacts upon request.

	TE Part Number
M8 Male Right Angled, Unshielded	
3-Pole	T4013008031-000
4-Pole	T4013008041-000

	TE Part Number
M8 Female Right Angled Unshielded	
3-Pole	T4012008031-000
4-Pole	T4012008041-000

M8 Male Right Angled, Shielded	
3-Pole	T4013019031-000
4-Pole	T4013019041-000

M8 Female Right Angled, Shielded	
3-Pole	T4010019031-000
4-Pole	T4010019041-000

M12 Straight Field Installable A, B, D Code

Male Series

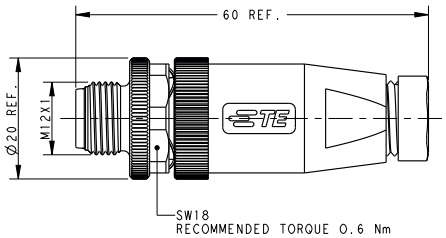

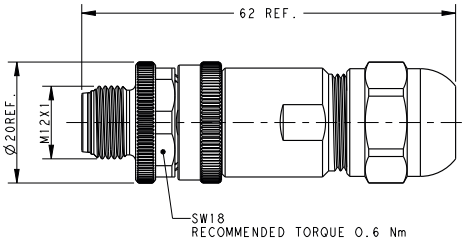

All dimensions in mm. Temperature range: -40 to +85 degree. Products can also be obtained with silver-plated contacts upon request.

		TE Part Number
A coding – M12 Male Screw Connection, Straight, Unshielded		
2-Pole	PG7	T4111001021-000
	PG9	T4111002021-000
3-Pole	PG7	**T4111001031-000**
	PG9	**T4111002031-000**
4-Pole	PG7	**T4111001041-000**
	PG9	**T4111002041-000**
5-Pole	PG7	**T4111001051-000**
	PG9	**T4111002051-000**
8-Pole	PG9	**T4111002081-000**

		TE Part Number
A coding – M12 Male Screw Connection, Straight, Shielded		
2-Pole	PG7	T4111011021-000
	PG9	T4111012021-000
3-Pole	PG7	**T4111011031-000**
	PG9	**T4111012031-000**
4-Pole	PG7	**T4111011041-000**
	PG9	**T4111012041-000**
5-Pole	PG7	**T4111011051-000**
	PG9	**T4111012051-000**
8-Pole	PG9	**T4111012081-000**

B coding – M12 Male Screw Connection, Straight, Unshielded		
2-Pole	PG7	T4111401021-000
	PG9	T4111402021-000
3-Pole	PG7	T4111401031-000
	PG9	T4111402031-000
4-Pole	PG7	T4111401041-000
	PG9	T4111402041-000
5-Pole	PG7	**T4111401051-000**
	PG9	**T4111402051-000**

B coding – M12 Male Screw Connection, Straight, Shielded		
2-Pole	PG7	T4111411021-000
	PG9	T4111412021-000
3-Pole	PG7	T4111411031-000
	PG9	T4111412031-000
4-Pole	PG7	T4111411041-000
	PG9	T4111412041-000
5-Pole	PG7	**T4111411051-000**
	PG9	**T4111412051-000**

D coding – M12 Male Screw Connection, Straight, Unshielded		
2-Pole	PG7	T4111501021-000
	PG9	T4111502021-000
3-Pole	PG7	T4111501031-000
	PG9	T4111502031-000
4-Pole	PG7	T4111501041-000
	PG9	T4111502041-000
5-Pole	PG7	T4111501051-000
	PG9	T4111502051-000

D coding – M12 Male Screw Connection, Straight, Shielded		
2-Pole	PG7	T4111511021-000
	PG9	T4111512021-000
3-Pole	PG7	T4111511031-000
	PG9	T4111512031-000
4-Pole	PG7	**T4111511041-000**
	PG9	**T4111512041-000**
5-Pole	PG7	T4111511051-000
	PG9	T4111512051-000

Female Series

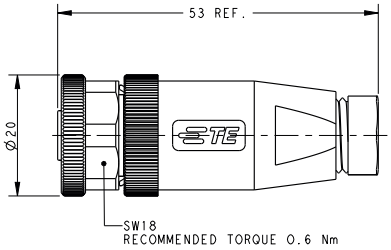

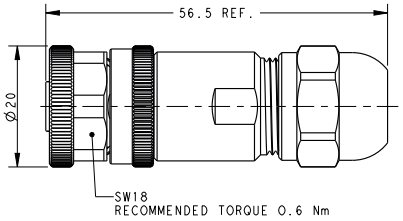

All dimensions in mm. Temperature range: -40 to +85 degree. Products can also be obtained with silver-plated contacts upon request.

		TE Part Number
A coding – M12 Female Screw Connection, Straight, Unshielded		
2-Pole	PG7	T4110001021-000
	PG9	T4110002021-000
3-Pole	PG7	**T4110001031-000**
	PG9	**T4110002031-000**
4-Pole	PG7	**T4110001041-000**
	PG9	**T4110002041-000**
5-Pole	PG7	**T4110001051-000**
	PG9	**T4110002051-000**
8-Pole	PG9	**T4110002081-000**

		TE Part Number
A coding – M12 Female Screw Connection, Straight, Shielded		
2-Pole	PG7	T4110011021-000
	PG9	T4110012021-000
3-Pole	PG7	**T4110011031-000**
	PG9	**T4110012031-000**
4-Pole	PG7	**T4110011041-000**
	PG9	**T4110012041-000**
5-Pole	PG7	**T4110011051-000**
	PG9	**T4110012051-000**
8-Pole	PG9	**T4110012081-000**

B coding – M12 Female Screw Connection, Straight, Unshielded		
2-Pole	PG7	T4110401021-000
	PG9	T4110402021-000
3-Pole	PG7	T4110401031-000
	PG9	T4110402031-000
4-Pole	PG7	T4110401041-000
	PG9	T4110402041-000
5-Pole	PG7	**T4110401051-000**
	PG9	**T4110402051-000**

B coding – M12 Female Screw Connection, Straight, Shielded		
2-Pole	PG7	T4110411021-000
	PG9	T4110412021-000
3-Pole	PG7	T4110411031-000
	PG9	T4110412031-000
4-Pole	PG7	T4110411041-000
	PG9	T4110412041-000
5-Pole	PG7	**T4110411051-000**
	PG9	**T4110412051-000**

D coding – M12 Female Screw Connection, Straight, Unshielded		
2-Pole	PG7	T4110501021-000
	PG9	T4110502021-000
3-Pole	PG7	T4110501031-000
	PG9	T4110502031-000
4-Pole	PG7	T4110501041-000
	PG9	T4110502041-000
5-Pole	PG7	T4110501051-000
	PG9	T4110502051-000

D coding – M12 Female Screw Connection, Straight, Shielded		
2-Pole	PG7	T4110511021-000
	PG9	T4110512021-000
3-Pole	PG7	T4110511031-000
	PG9	T4110512031-000
4-Pole	PG7	**T4110511041-000**
	PG9	**T4110512041-000**
5-Pole	PG7	T4110511051-000
	PG9	T4110512051-000

M12 Angled Field Installable A, B, D Code

Male Series

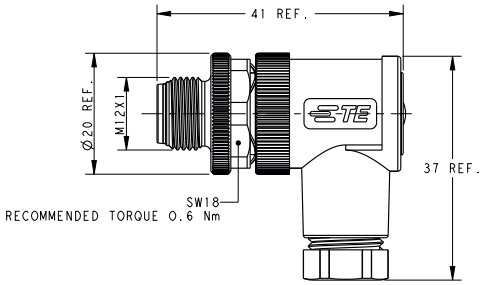

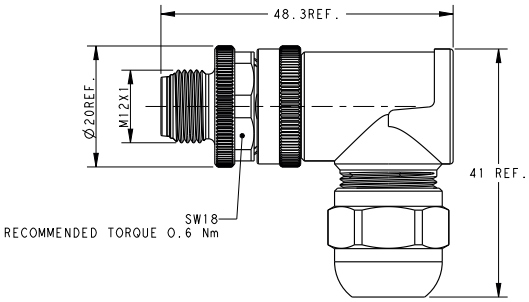

All dimensions in mm. Temperature range: -40 to +85 degree. Products can also be obtained with silver-plated contacts upon request.

Temperature range: -25 to +85		TE Part Number
A coding – M12 Male Screw Connection, Angled, Unshielded		
2-Pole	PG7	T4113001021-000
	PG9	T4113002021-000
3-Pole	PG7	**T4113001031-000**
	PG9	**T4113002031-000**
4-Pole	PG7	**T4113001041-000**
	PG9	**T4113002041-000**
5-Pole	PG7	**T4113001051-000**
	PG9	**T4113002051-000**
8-Pole	PG9	**T4113002081-000**

		TE Part Number
A coding – M12 Male Screw Connection, Angled, Shielded		
2-Pole	PG7	T4113011021-000
	PG9	T4113012021-000
3-Pole	PG7	**T4113011031-000**
	PG9	**T4113012031-000**
4-Pole	PG7	**T4113011041-000**
	PG9	**T4113012041-000**
5-Pole	PG7	**T4113011051-000**
	PG9	**T4113012051-000**
8-Pole	PG9	**T4113012081-000**

B coding – M12 Male Screw Connection, Angled, Unshielded		
2-Pole	PG7	T4113401021-000
	PG9	T4113402021-000
3-Pole	PG7	T4113401031-000
	PG9	T4113402031-000
4-Pole	PG7	T4113401041-000
	PG9	T4113402041-000
5-Pole	PG7	**T4113401051-000**
	PG9	**T4113402051-000**

B coding – M12 Male Screw Connection, Angled, Shielded		
2-Pole	PG7	T4113411021-000
	PG9	T4113412021-000
3-Pole	PG7	T4113411031-000
	PG9	T4113412031-000
4-Pole	PG7	T4113411041-000
	PG9	T4113412041-000
5-Pole	PG7	**T4113411051-000**
	PG9	**T4113412051-000**

D coding – M12 Male Screw Connection, Angled, Unshielded		
2-Pole	PG7	T4113501021-000
	PG9	T4113502021-000
3-Pole	PG7	T4113501031-000
	PG9	T4113502031-000
4-Pole	PG7	T4113501041-000
	PG9	T4113502041-000
5-Pole	PG7	T4113501051-000
	PG9	T4113502051-000

D coding – M12 Male Screw Connection, Angled, Shielded		
2-Pole	PG7	T4113511021-000
	PG9	T4113512021-000
3-Pole	PG7	T4113511031-000
	PG9	T4113512031-000
4-Pole	PG7	**T4113511041-000**
	PG9	**T4113512041-000**
5-Pole	PG7	T4113511051-000
	PG9	T4113512051-000

Female Series

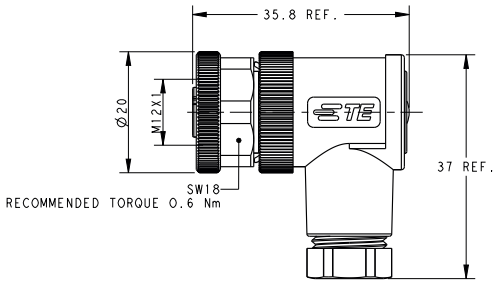

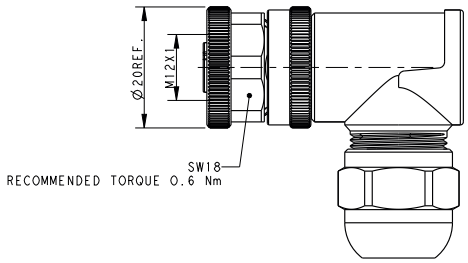

All dimensions in mm.Temperature range: -40 to +85 degree. Products can also be obtained with silver-plated contacts upon request.

		TE Part Number
A coding – M12 Female Screw Connection, Angled, Unshielded		
2-Pole	PG7	T4112001021-000
	PG9	T4112002021-000
3-Pole	PG7	**T4112001031-000**
	PG9	**T4112002031-000**
4-Pole	PG7	**T4112001041-000**
	PG9	**T4112002041-000**
5-Pole	PG7	**T4112001051-000**
	PG9	**T4112002051-000**
8-Pole	PG9	**T4112002081-000**

		TE Part Number
A coding – M12 Female Screw Connection, Angled, Shielded		
2-Pole	PG7	T4112011021-000
	PG9	T4112012021-000
3-Pole	PG7	**T4112011031-000**
	PG9	**T4112012031-000**
4-Pole	PG7	**T4112011041-000**
	PG9	**T4112012041-000**
5-Pole	PG7	**T4112011051-000**
	PG9	**T4112012051-000**
8-Pole	PG9	**T4112012081-000**

B coding – M12 Female Screw Connection, Angled, Unshielded		
2-Pole	PG7	T4112401021-000
	PG9	T4112402021-000
3-Pole	PG7	T4112401031-000
	PG9	T4112402031-000
4-Pole	PG7	T4112401041-000
	PG9	T4112402041-000
5-Pole	PG7	**T4112401051-000**
	PG9	**T4112402051-000**

B coding – M12 Female Screw Connection, Angled, Shielded		
2-Pole	PG7	T4112411021-000
	PG9	T4112412021-000
3-Pole	PG7	T4112411031-000
	PG9	T4112412031-000
4-Pole	PG7	T4112411041-000
	PG9	T4112412041-000
5-Pole	PG7	**T4112411051-000**
	PG9	**T4112412051-000**

D coding – M12 Female Screw Connection, Angled, Unshielded		
2-Pole	PG7	T4112501021-000
	PG9	T4112502021-000
3-Pole	PG7	T4112501031-000
	PG9	T4112502031-000
4-Pole	PG7	T4112501041-000
	PG9	T4112502041-000
5-Pole	PG7	T4112501051-000
	PG9	T4112502051-000

D coding – M12 Female Screw Connection, Angled, Shielded		
2-Pole	PG7	T4112511021-000
	PG9	T4112512021-000
3-Pole	PG7	T4112511031-000
	PG9	T4112512031-000
4-Pole	PG7	**T4112511041-000**
	PG9	**T4112512041-000**
5-Pole	PG7	T4112511051-000
	PG9	T4112512051-000

M12 Straight Field Installable

Male Series

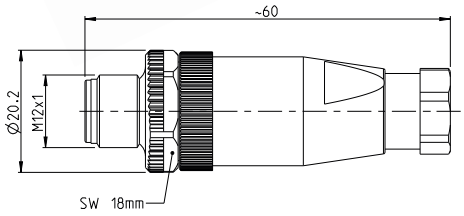

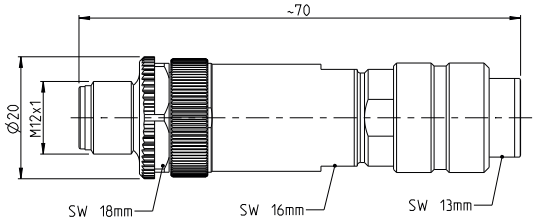

All dimensions in mm. Temperature range: -40 to +85 degree.

		TE Part Number
A coding – M12 Male Screw Connection, Straight		
3-Pole	PG7	2-2271110-1
	PG9	2-2271110-2
4-Pole	PG7	3-2271110-1
	PG9	3-2271110-2
5-Pole	PG7	4-2271110-1
	PG9	4-2271110-2
8-Pole	PG9	5-2271110-2
12-Pole	PG9	6-2271110-2

B coding – M12 Male Screw Connection, Straight		
4-Pole	PG7	3-2271112-1
	PG9	3-2271112-2
5-Pole	PG7	4-2271112-1
	PG9	4-2271112-2

		TE Part Number
A coding – M12 Male Screw Connection, Straight, Shielded		
4-Pole	PG7	3-2271111-2
5-Pole	PG7	4-2271111-2
8-Pole	PG7	5-2271111-2
12-Pole	PG9	6-2271111-2

B coding – M12 Male Screw Connection, Straight, Shielded		
4-Pole	PG7	3-2271113-2
5-Pole	PG7	4-2271113-2

D coding – M12 Male Screw Connection, Straight, Shielded		
4-Pole	PG7	3-2271115-2

S coding – M12 Male Screw Connection, Straight, Shielded		
3-Pole	plus PE	2120951-1

T coding – M12 Male Screw Connection, Straight, Shielded		
4-Pole		3-2172096-2

Female Series

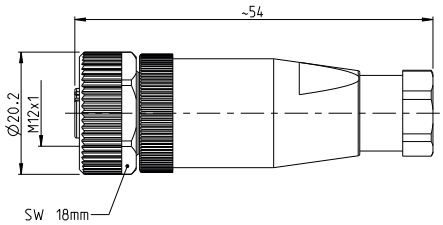

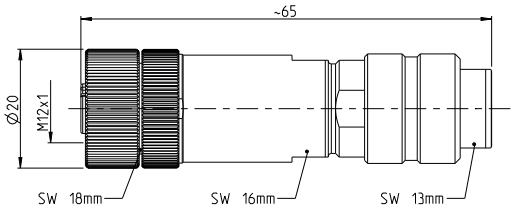

All dimensions in mm. Temperature range: -40 to +85 degree.

		TE Part Number
A coding – M12 Female Screw Connection, Straight		
3-Pole	PG7	2-2271116-1
	PG9	2-2271116-2
4-Pole	PG7	3-2271116-1
	PG9	3-2271116-2
5-Pole	PG7	4-2271116-1
	PG9	4-2271116-2
8-Pole	PG9	5-2271116-2
12-Pole	PG9	6-2271116-2

B coding – M12 Female Screw Connection, Straight		
4-Pole	PG7	3-2271118-1
	PG9	3-2271118-2
5-Pole	PG7	4-2271118-1
	PG9	4-2271118-2

		TE Part Number
A coding – M12 Female Screw Connection, Straight, Shielded		
4-Pole	PG9	3-2271117-2
5-Pole	PG9	4-2271117-2
8-Pole	PG9	5-2271117-2
12-Pole	PG9	6-2271117-2

B coding – M12 Female Screw Connection, Straight, Shielded		
4-Pole	PG7	3-2271119-2
5-Pole	PG7	4-2271119-2

D coding – M12 Female Screw Connection, Straight, Shielded		
4-Pole	PG7	3-2271121-2

S coding – M12 Female Screw Connection, Straight, Shielded		
3-Pole	plus PE	2120950-1

T coding – M12 Female, Screw Connection, Straight, Shielded		
4-Pole		3-2172097-2

M12 Angled Field Installable

Male Series

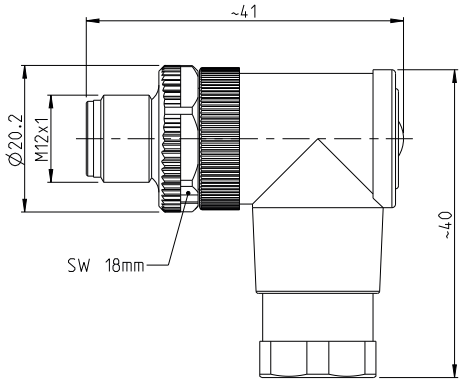

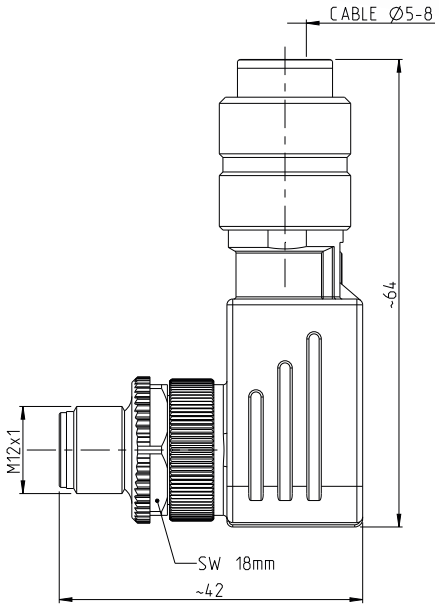

All dimensions in mm. Temperature range: -40 to +85 degree.

		TE Part Number
A coding – M12 Male Screw Connection, Angled		
3-Pole	PG7	2-2271122-1
	PG9	2-2271122-2
4-Pole	PG7	3-2271122-1
	PG9	3-2271122-2
5-Pole	PG7	4-2271122-1
	PG9	4-2271122-2
8-Pole	PG9	5-2271122-2
12-Pole	PG9	6-2271122-2

B coding – M12 Male Screw Connection, Angled		
4-Pole	PG7	3-2271124-1
	PG9	3-2271124-2
5-Pole	PG7	4-2271124-1
	PG9	4-2271124-2

		TE Part Number
A coding – M12 Male Screw Connection, Angled, Shielded		
4-Pole	PG7	3-2271123-2
5-Pole	PG7	4-2271123-2
8-Pole	PG7	5-2271123-2
12-Pole	PG9	6-2271123-2

B coding – M12 Male Screw Connection, Angled, Shielded		
4-Pole	PG7	3-2271125-2
5-Pole	PG7	4-2271125-2

D coding – M12 Male Screw Connection, Angled, Shielded		
4-Pole	PG7	3-2271127-2
	PG9	3-2271133-2

Female Series

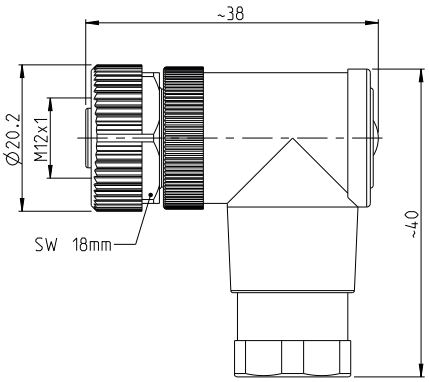

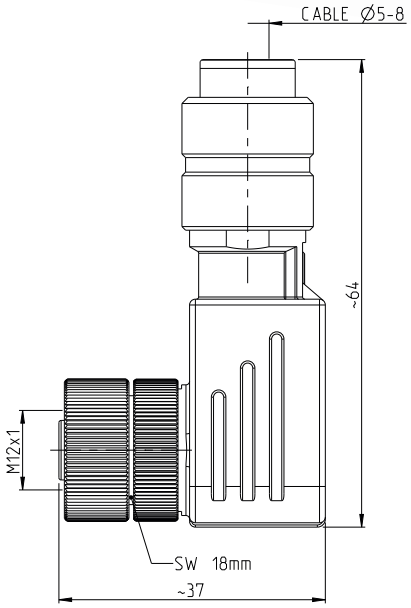

All dimensions in mm. Temperature range: -40 to +85 degree.

		TE Part Number
A coding – M12 Female Screw Connection, Angled		
3-Pole	PG7	2-2271128-1
	PG9	2-2271128-2
4-Pole	PG7	3-2271128-1
	PG9	3-2271128-2
5-Pole	PG7	4-2271128-1
	PG9	4-2271128-2
8-Pole	PG9	5-2271128-2
12-Pole	PG9	6-2271128-2

B coding – M12 Female Screw Connection, Angled		
4-Pole	PG7	3-2271130-1
	PG9	3-2271130-2
5-Pole	PG7	4-2271130-1
	PG9	4-2271130-2

		TE Part Number
A coding – M12 Female Screw Connection, Angled, Shielded		
4-Pole	PG7	3-2271129-2
5-Pole	PG7	4-2271129-2
8-Pole	PG7	5-2271129-2
12-Pole	PG9	6-2271129-2

B coding – M12 Female Screw Connection, Angled, Shielded		
4-Pole	PG9	3-2271131-2
5-Pole	PG9	4-2271131-2

D coding – M12 Female Screw Connection, Angled, Shielded		
4-Pole	PG7	3-2271133-2

M8 Panel Mount Solder PCB

Male Series

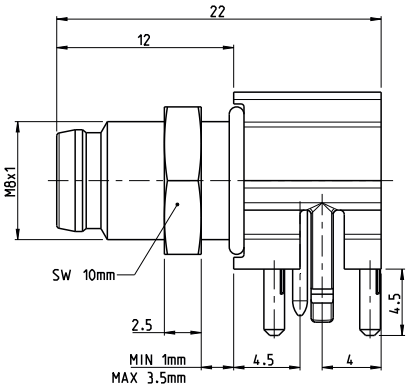

Female Series

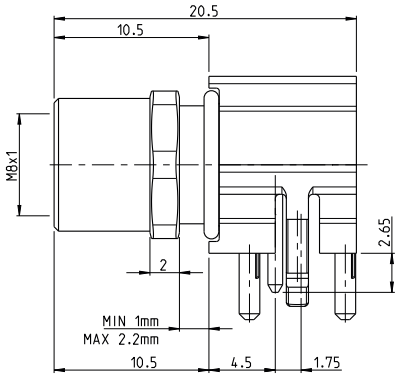

All dimensions in mm. Temperature range: -40 to +85 degree.

	TE Part Number
M8, Male, Rear Mount, PCB, R/A, Unshielded	
3-Pole	2-2172067-2
4-Pole	3-2172067-2

	TE Part Number
M8, Female, Rear Mount, PCB, R/A, Unshielded	
3-Pole	2-2172068-2
4-Pole	3-2172068-2

M8, Male, Rear Mount, PCB, R/A, Shielded	
3-Pole	2-2172093-2
4-Pole	3-2172093-2

M8, Female, Rear Mount, PCB, R/A, Shielded	
3-Pole	2-2172091-2
4-Pole	3-2172091-2

Male Series

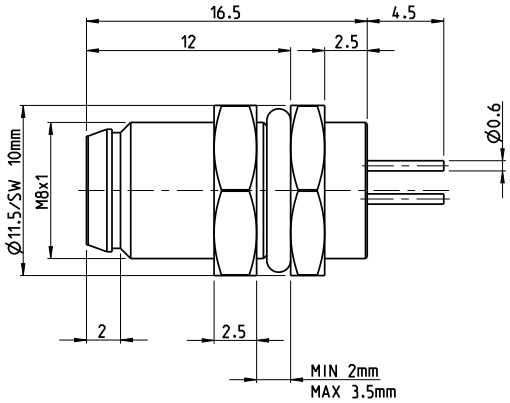

Female Series

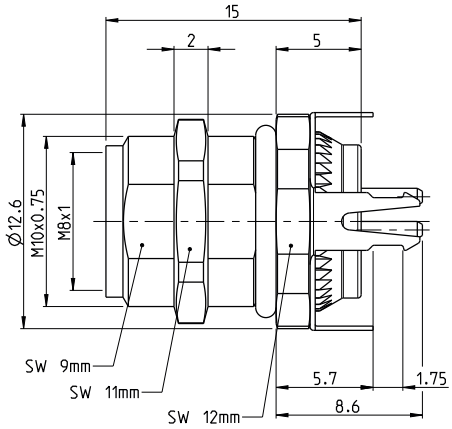

All dimensions in mm. Temperature range: -40 to +85 degree.

	TE Part Number
M8, Male, Rear Mount, PCB, Straight, Unshielded	
4-Pole	3-2172069-2

M8, Male, Rear Mount, PCB, Straight, Shielded		
3-Pole		2-2172092-2
4-Pole		3-2172092-2

		TE Part Number
M8, Female, Rear Mount, PCB, Straight, Shielded		
3-Pole		2-2172089-2
4-Pole		3-2172089-2

M8 Panel Mount Wire

Male Series

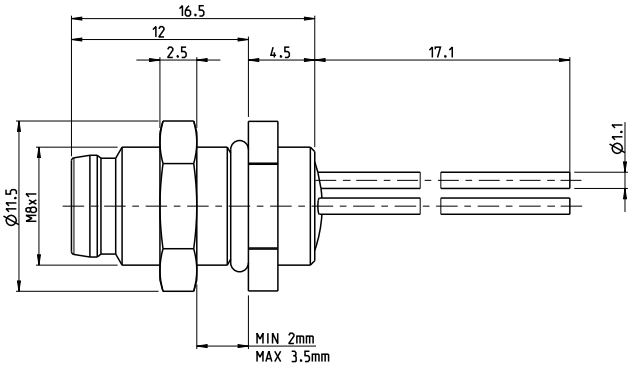

Female Series

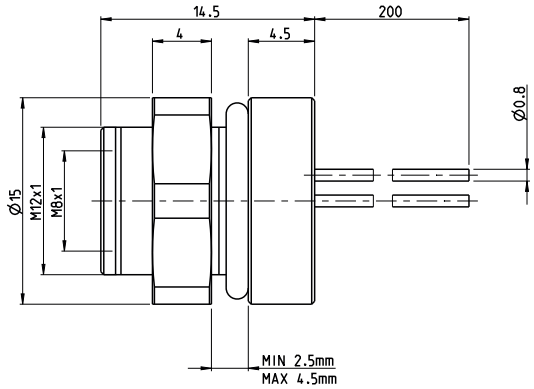

All dimensions in mm. Temperature range: -40 to +85 degree.

	TE Part Number
M8, Male, Rear Mount, Wire, Straight	
3-Pole	2-2172090-2
4-Pole	3-2172090-2

	TE Part Number
M8, Female, Rear Mount, Wire, Straight	
3-Pole	2-2172088-2
4-Pole	3-2172088-2

M12 Panel Mount Solder PCB

Male Series

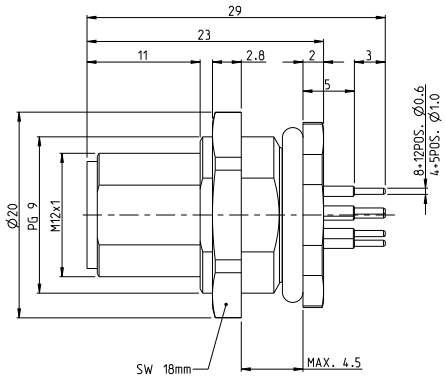

Female Series

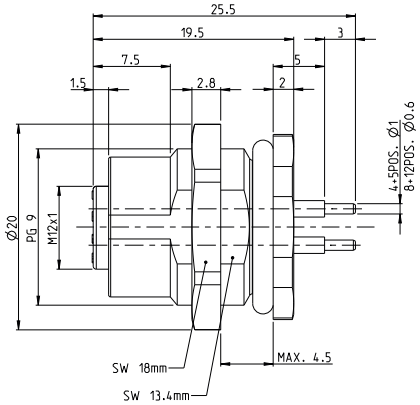

All dimensions in mm. Temperature range: -40 to +85 degree.

		TE Part Number
A coding **M12 Male, Rear Mounting M16 x 1.5, Straight**		
4-Pole	PG9	3-2271140-2
5-Pole	PG9	4-2271140-2
8-Pole	PG9	5-2271140-2
12-Pole	PG9	6-2271140-2

B coding **M12 Male, Rear Mounting M16 x 1.5, Straight**		
4-Pole	PG9	3-2271141-2
5-Pole	PG9	4-2271141-2

D coding **M12 Male, Rear Mounting M16 x 1.5, Straight**		
4-Pole	PG9	3-2271142-2

		TE Part Number
A coding **M12 Female, Rear Mounting M16 x 1.5, Straight**		
4-Pole	PG9	3-2271143-2
5-Pole	PG9	4-2271143-2
8-Pole	PG9	5-2271143-2
12-Pole	PG9	6-2271143-2

B coding **M12 Female, Rear Mounting M16 x 1.5, Straight**		
4-Pole	PG9	3-2271144-2
5-Pole	PG9	4-2271144-2

D coding **M12 Female, Rear Mounting M16 x 1.5, Straight**		
4-Pole	PG9	3-2271145-2

M12 Panel Mount Solder PCB

Male Series

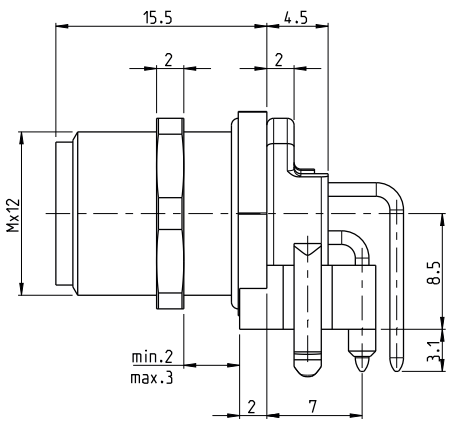

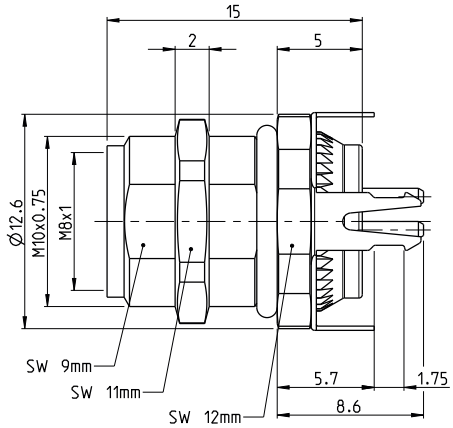

All dimensions in mm. Temperature range: -40 to +85 degree.

	TE Part Number
A coding – M12, Male, Rear Mount, PCB, R/A, Unshielded	
4-Pole	3-2172062-2
5-Pole	4-2172062-2

A coding – M12, Male, Rear Mount, PCB, R/A, Shielded	
4-Pole (45 degrees)	3-2172094-2
4-Pole	3-2172081-2
5-Pole	4-2172081-2
8-Pole	5-2172081-2

A coding – M12, Male, Rear Mount, PCB, Straight, Unshielded	
4-Pole	3-2172070-2
5-Pole	4-2172070-2
8-Pole	5-2172070-2

A coding – M12, Male, Rear Mount, PCB, Straight, Shielded	
4-Pole	3-2172080-2
5-Pole	4-2172080-2
8-Pole	5-2172080-2

	TE Part Number
B coding – M12, Male, Rear Mount, PCB, R/A, Unshielded	
5-Pole	4-2172082-2

B coding – M12, Male, Rear Mount, PCB, R/A, Shielded	
5-Pole	4-2172063-2

B coding – M12, Male, Rear Mount, PCB, Straight, Shielded	
5-Pole	4-2172073-2

D coding – M12, Male, Rear Mount, PCB, R/A, Unshielded	
4-Pole	3-2172086-2

D coding – M12, Male, Rear Mount, PCB, R/A, Shielded	
4-Pole	3-2172065-2

D coding – M12, Male, Rear Mount, PCB, Straight, Shielded	
4-Pole	3-2172084-2

Female Series

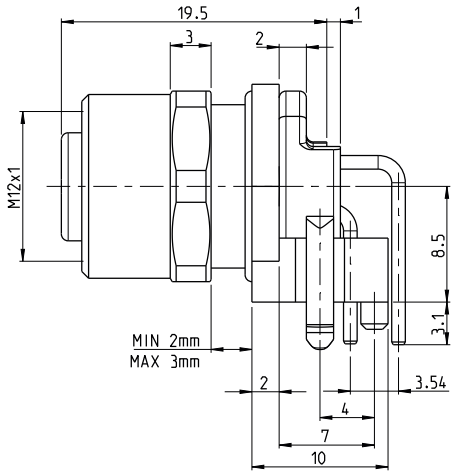

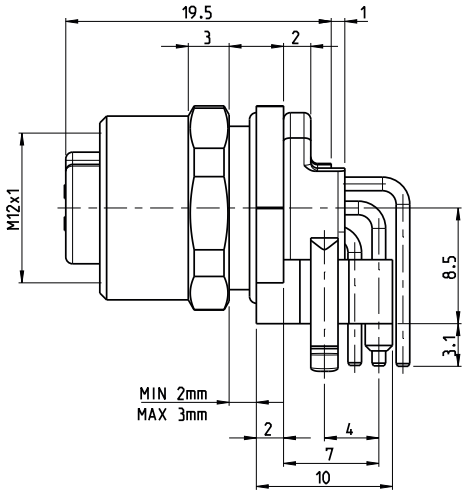

All dimensions in mm. Temperature range: -40 to +85 degree.

	TE Part Number
A coding – M12, Female, Rear Mount, PCB, R/A, Unshielded	
4-Pole	3-2172072-2
5-Pole	4-2172072-2

A coding – M12, Female, Rear Mount, PCB, R/A, Shielded	
4-Pole (45 degrees)	3-2172095-2
4-Pole	3-2172079-2
5-Pole	4-2172079-2
8-Pole	5-2172079-2

A coding – M12, Female, Rear Mount, PCB, Straight, Unshielded	
4-Pole	3-2172071-2
5-Pole	4-2172071-2
8-Pole	5-2172071-2

A coding – M12, Female, Rear Mount, PCB, Straight, Shielded	
4-Pole	3-2172078-2
5-Pole	4-2172078-2
8-Pole	5-2172078-2

	TE Part Number
B coding – M12, Female, Rear Mount, PCB, R/A, Unshielded	
5-Pole	4-2172083-2

B coding – M12, Female, Rear Mount, PCB, R/A, Shielded	
5-Pole	4-2172064-2

B coding – M12, Female, Rear Mount, PCB, Straight, Shielded	
5-Pole	4-2172074-2

D coding – M12, Female, Rear Mount, PCB, R/A, Unshielded	
4-Pole	3-2172087-2

D coding – M12, Female, Rear Mount, PCB, R/A, Shielded	
4-Pole	3-2172066-2

D coding – M12, Female, Rear Mount, PCB, Straight, Shielded	
4-Pole	3-2172085-2

M12 Panel Mount PCB – Rear Mounting

Male Series

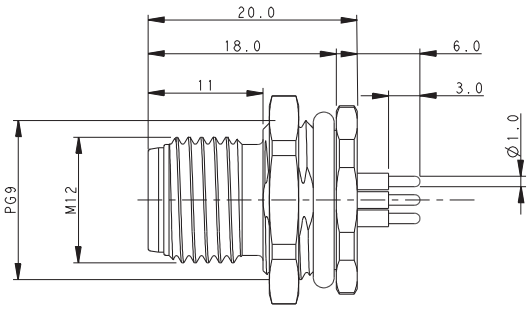

Female Series

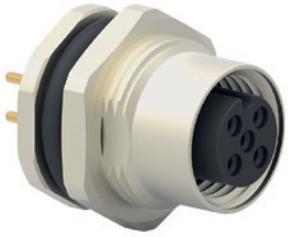

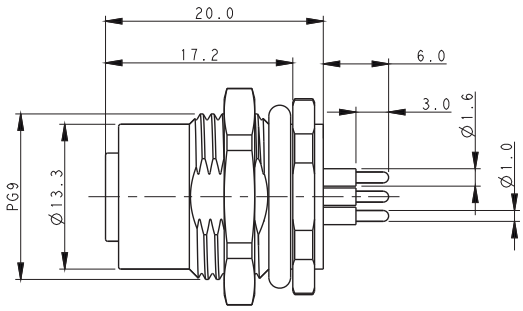

All dimensions in mm. Temperature range: -40 to +85 degree.

	TE Part Number
A coding – M12 Male, Rear Mounting, Straight	
2-Pole	T4140012021-000
3-Pole	T4140012031-000
4-Pole	T4140012041-000
5-Pole	T4140012051-000

B coding – M12 Male, Rear Mounting, Straight	
2-Pole	T4140412021-000
3-Pole	T4140412031-000
4-Pole	T4140412041-000
5-Pole	T4140412051-000

D coding – M12 Male, Rear Mounting, Straight	
2-Pole	T4140512021-000
3-Pole	T4140512031-000
4-Pole	T4140512041-000
5-Pole	T4140512051-000

	TE Part Number
A coding – M12 Female, Rear Mounting, Straight	
2-Pole	T4141012021-000
3-Pole	T4141012031-000
4-Pole	T4141012041-000
5-Pole	T4141012051-000

B coding – M12 Female, Rear Mounting, Straight	
2-Pole	T4141412021-000
3-Pole	T4141412031-000
4-Pole	T4141412041-000
5-Pole	T4141412051-000

D coding – M12 Female, Rear Mounting, Straight	
2-Pole	T4141512021-000
3-Pole	T4141512031-000
4-Pole	T4141512041-000
5-Pole	T4141512051-000

M12 Panel Mount PCB – Front Mounting

Male Series

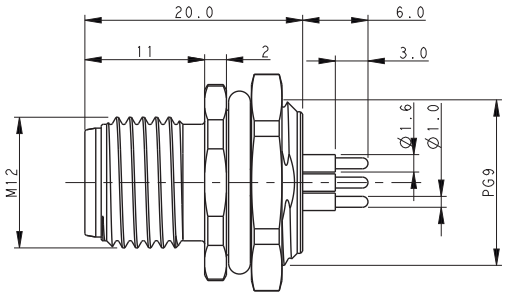

Female Series

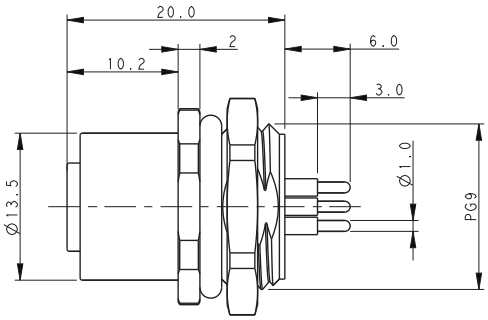

All dimensions in mm. Temperature range: -40 to +85 degree.

	TE Part Number
A coding – M12 Male, Front Mounting, Straight	
2-Pole	T4142012021-000
3-Pole	T4142012031-000
4-Pole	T4142012041-000
5-Pole	T4142012051-000

B coding – M12 Male, Front Mounting, Straight	
2-Pole	T4142412021-000
3-Pole	T4142412031-000
4-Pole	T4142412041-000
5-Pole	T4142412051-000

D coding – M12 Male, Front Mounting, Straight	
2-Pole	T4142512021-000
3-Pole	T4142512031-000
4-Pole	T4142512041-000
5-Pole	T4142512051-000

	TE Part Number
A coding – M12 Female, Front Mounting, Straight	
2-Pole	T4143012021-000
3-Pole	T4143012031-000
4-Pole	T4143012041-000
5-Pole	T4143012051-000

B coding – M12 Female, Front Mounting, Straight	
2-Pole	T4143412021-000
3-Pole	T4143412031-000
4-Pole	T4143412041-000
5-Pole	T4143412051-000

D coding – M12 Female, Front Mounting, Straight	
2-Pole	T4143512021-000
3-Pole	T4143512031-000
4-Pole	T4143512041-000
5-Pole	T4143512051-000

M12 Panel Mount Solder Wire – Rear Mounting

Male Series

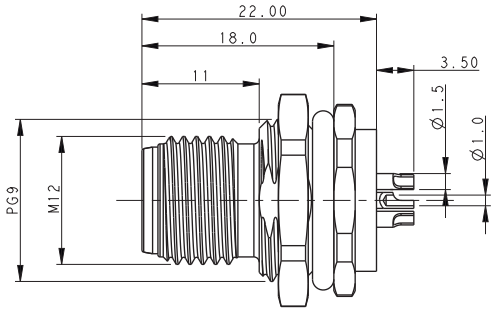

Female Series

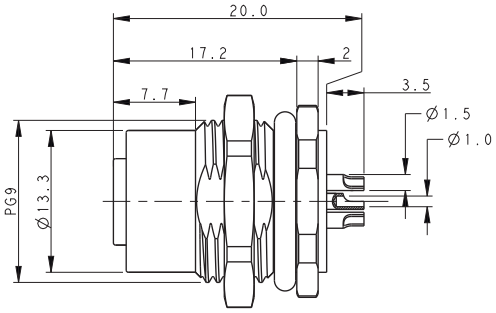

All dimensions in mm. Temperature range: -40 to +85 degree.

	TE Part Number
A coding – M12 Male, Rear Mounting, PCB	
2-Pole	T4130012021-000
3-Pole	T4130012031-000
4-Pole	T4130012041-000
5-Pole	T4130012051-000

B coding – M12 Male, Rear Mounting, PCB	
2-Pole	T4130412021-000
3-Pole	T4130412031-000
4-Pole	T4130412041-000
5-Pole	T4130412051-000

D coding – M12 Male, Rear Mounting, PCB	
2-Pole	T4130512021-000
3-Pole	T4130512031-000
4-Pole	T4130512041-000
5-Pole	T4130512051-000

	TE Part Number
A coding – M12 Female, Rear Mounting, PCB	
2-Pole	T4131012021-000
3-Pole	T4131012031-000
4-Pole	T4131012041-000
5-Pole	T4131012051-000

B coding – M12 Female, Rear Mounting, PCB	
2-Pole	T4131412021-000
3-Pole	T4131412031-000
4-Pole	T4131412041-000
5-Pole	T4131412051-000

D coding – M12 Female, Rear Mounting, PCB	
2-Pole	T4131512021-000
3-Pole	T4131512031-000
4-Pole	T4131512041-000
5-Pole	T4131512051-000

M12 Panel Mount Solder Wire – Front Mounting

Male Series

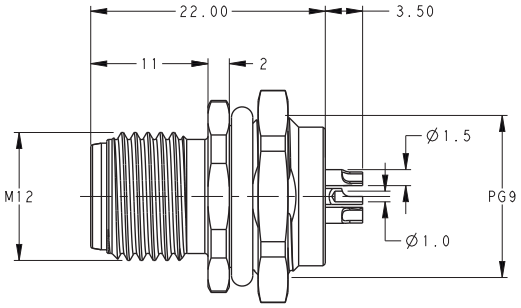

Female Series

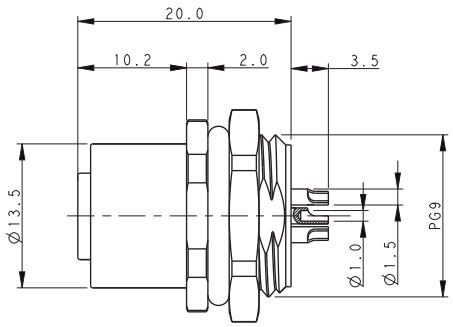

All dimensions in mm. Temperature range: -40 to +85 degree.

	TE Part Number
A coding – M12 Male, Front Mounting, PCB	
2-Pole	T4132012021-000
3-Pole	T4132012031-000
4-Pole	T4132012041-000
5-Pole	T4132012051-000

	TE Part Number
A coding – M12 Female, Front Mounting, PCB	
2-Pole	T4133012021-000
3-Pole	T4133012031-000
4-Pole	T4133012041-000
5-Pole	T4133012051-000

B coding – M12 Male, Front Mounting, PCB	
2-Pole	T4132412021-000
3-Pole	T4132412031-000
4-Pole	T4132412041-000
5-Pole	T4132412051-000

B coding – M12 Female, Front Mounting, PCB	
2-Pole	T4133412021-000
3-Pole	T4133412031-000
4-Pole	T4133412041-000
5-Pole	T4133412051-000

D coding – M12 Male, Front Mounting, PCB	
2-Pole	T4132512021-000
3-Pole	T4132512031-000
4-Pole	T4132512041-000
5-Pole	T4132512051-000

D coding – M12 Female, Front Mounting, PCB	
2-Pole	T4133512021-000
3-Pole	T4133512031-000
4-Pole	T4133512041-000
5-Pole	T4133512051-000

M12 Panel Mount 200mm Wire – Rear Mounting

Male Series

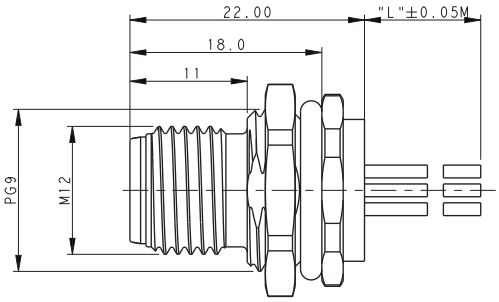

Female Series

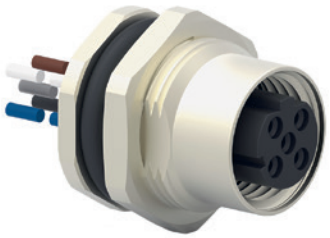

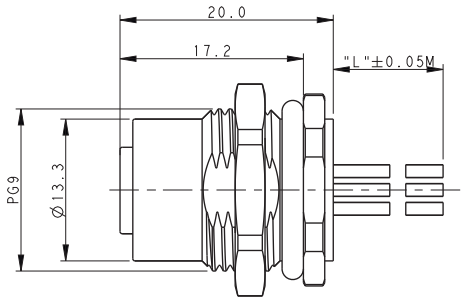

All dimensions in mm. Temperature range: -40 to +85 degree.

	TE Part Number
A coding – M12 Male, Rear Mounting, 200mm wire	
2-Pole	T4171010002-001
3-Pole	T4171010003-001
4-Pole	T4171010004-001
5-Pole	T4171010005-001

	TE Part Number
B coding – M12 Male, Rear Mounting, 200mm wire	
2-Pole	T4171010402-001
3-Pole	T4171010403-001
4-Pole	T4171010404-001
5-Pole	T4171010405-001

	TE Part Number
D coding – M12 Male, Rear Mounting, 200mm wire	
2-Pole	T4171010502-001
3-Pole	T4171010503-001
4-Pole	T4171010504-001
5-Pole	T4171010505-001

	TE Part Number
A coding – M12 Female, Rear Mounting, 200mm wire	
2-Pole	T4171110002-001
3-Pole	T4171110003-001
4-Pole	T4171110004-001
5-Pole	T4171110005-001

B coding – M12 Female, Rear Mounting, 200mm wire	
2-Pole	T4171110402-001
3-Pole	T4171110403-001
4-Pole	T4171110404-001
5-Pole	T4171110405-001

D coding – M12 Female, Rear Mounting, 200mm wire	
2-Pole	T4171110502-001
3-Pole	T4171110503-001
4-Pole	T4171110504-001
5-Pole	T4171110505-001

M12 Panel Mount 200mm Wire – Front Mounting

Male Series

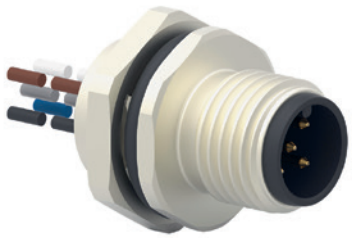

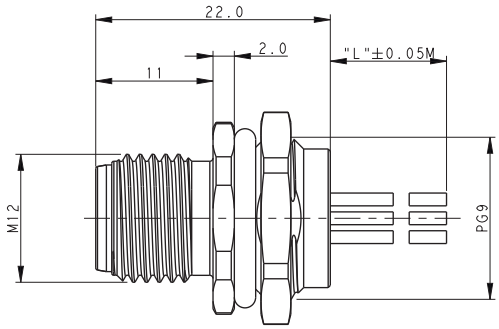

Female Series

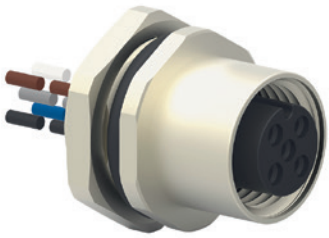

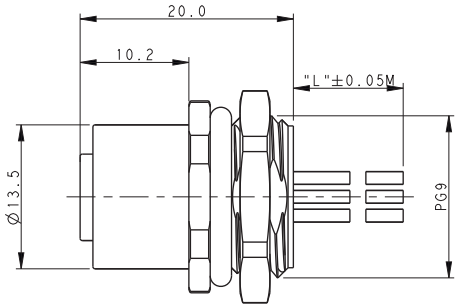

All dimensions in mm. Temperature range: -40 to +85 degree.

	TE Part Number
A coding – M12 Male, Front Mounting, 200mm wire	
2-Pole	T4171210002-001
3-Pole	T4171210003-001
4-Pole	T4171210004-001
5-Pole	T4171210005-001

B coding – M12 Male, Front Mounting, 200mm wire	
2-Pole	T4171210402-001
3-Pole	T4171210403-001
4-Pole	T4171210404-001
5-Pole	T4171210405-001

D coding – M12 Male, Front Mounting, 200mm wire	
2-Pole	T4171210502-001
3-Pole	T4171210503-001
4-Pole	T4171210504-001
5-Pole	T4171210505-001

	TE Part Number
A coding – M12 Female, Front Mounting, 200mm wire	
2-Pole	T4171310002-001
3-Pole	T4171310003-001
4-Pole	T4171310004-001
5-Pole	T4171310005-001

B coding – M12 Female, Front Mounting, 200mm wire	
2-Pole	T4171310402-001
3-Pole	T4171310403-001
4-Pole	T4171310404-001
5-Pole	T4171310405-001

D coding – M12 Female, Front Mounting, 200mm wire	
2-Pole	T4171310502-001
3-Pole	T4171310503-001
4-Pole	T4171310504-001
5-Pole	T4171310505-001

M12 Panel Mount Wire

Male Series

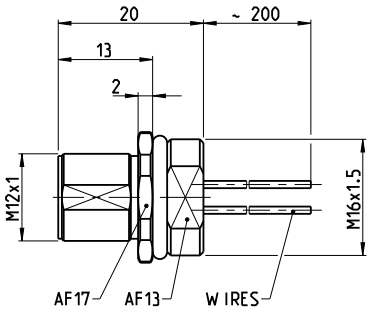

Female Series

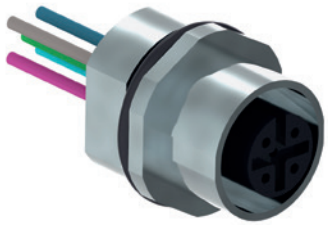

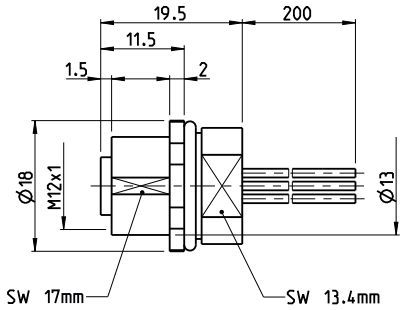

All dimensions in mm. Temperature range: -40 to +85 degree.

		TE Part Number
A coding **M12 Male, Front Mounting M16 x 1.5 with wires 0.25 200 mm**		
4-Pole		3-2271134-2
5-Pole		4-2271134-2
8-Pole		5-2271134-2
12-Pole		6-2271134-2

B coding **M12 Male, Front Mounting M16 x 1.5 with wires 0.25 200 mm**		
4-Pole		3-2271135-2
5-Pole		4-2271135-2

D coding **M12 Male, Front Mounting M16 x 1.5 with wires 0.25 200 mm**		
4-Pole	PG9	3-2271136-2

T coding **M12 Male, Front Mounting M20 x 1.5**		
4-Pole		2120947-1

		TE Part Number
A coding **M12 Female, Front Mounting M16 x 1.5 with wires 0.25 200 mm**		
4-Pole		3-2271137-2
5-Pole		4-2271137-2
8-Pole		5-2271137-2
12-Pole		6-2271137-2

B coding **M12 Female, Front Mounting M16 x 1.5 with wires 0.25 200 mm**		
4-Pole		3-2271138-2
5-Pole		4-2271138-2

D coding **M12 Female, Front Mounting M16 x 1.5 with wires 0.25 200 mm**		
4-Pole		3-2271139-2

S coding **M12 Female, Panel Mount M12 x 1, Screw Connection**		
3-Pole	Plus PE	3-2823647-2

T coding **M12 Female, Front Mounting M20 x 1.5**		
4-Pole		2120946-1

M12 X-Coded

M12 X-Coded PCB Connector

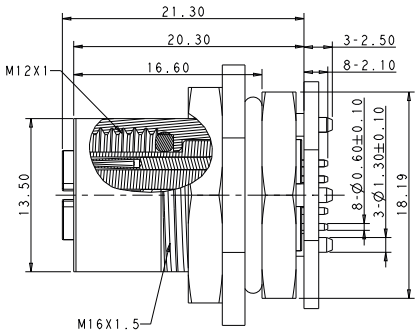

M12 Pin Connector Cable Assembly

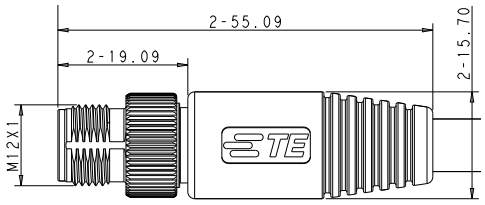

All dimensions in mm. Temperature range: -40 to +85 degree.

Description	TE Part Number
M12 X-Coded PCB Connector	
Female Panel Mount Solder PCB Connector	2232331-1
Female Panel Mount Solder Wire	2271195-1

M12 X-Coded Field Installable Connector	
Male Connector installable (IDC): 5.5 - 9 mm cable diameter	2120952-1

Length	TE Part Number
M12 Pin Connector Cable Assembly	
1 m	2241021-1
2 m	2241021-2
3 m	2241021-3
4 m	2241021-4
5 m	2241021-5
10 m	2241021-6

Accessories

Dust Caps

2823563-1

2823064-1

2823065-1

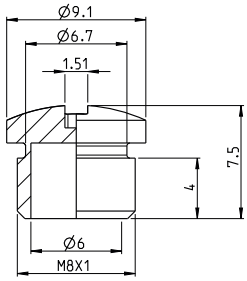

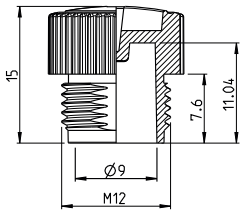

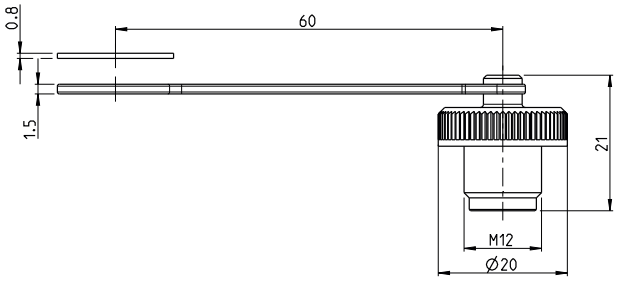

All dimensions in mm. Temperature range: -40 to +85 degree.

	TE Part Number
Dust Caps	
M8, Dust Cap, Female, IP67, without sleeve	2823563-1
M12, Dust Cap, Female, IP67, without sleeve	2823064-1
M12, Dust Cap, Female, IP67, with sleeve	2823065-1

Nuts for Panel Mount connectors

2823423-1

2823066-1

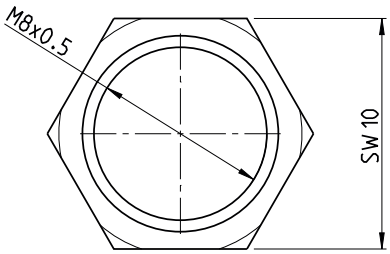

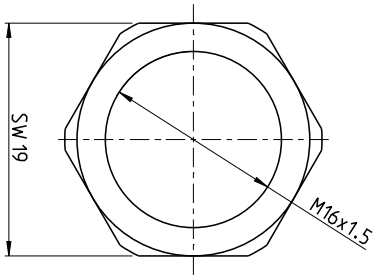

All dimensions in mm.

	TE Part Number
Nuts for Panel Mount connectors	
Nut for M8 Panel Mount connector	2823423-1
Nut for M12 Panel Mount connector	2823066-1

M8/M12 CABLE ASSEMBLIES

TE's M8/M12 cable assemblies are available as single-ended or double-ended and as straight or angled versions. Various cable types, colors and lengths offer a flexible design that can be used in combination with TE's male/female connectors and I/O Modules.

Standard (IEC):
IEC 61076-2-104 for all M8 series and
IEC 61076-2-101 for all M12 series

Operating temperature:
Connectors: -25°C to +85°C
Cables:
- PVC: -5°C to + 80°C Flexible
  -30°C to + 80°C Fixed
- PUR: -25°C to + 80°C (90°C max. 10.000h) Flexible
  -40°C to + 80°C (90°C max. 10.000h) Fixed

Connector Contacts:
Current rating per contact is 4 A

Shielding: Yes/No
Refer to drawing

Suitable Cable Diameter:
Refer to drawing

IP Rating:
IP65/67

Application Areas:
PUR: For use in demanding environments with required resistance to oils, cehmicals and abrasion
PUR/PVC: For use assembly and production lines requiring higher cut, abrasion and chemical resistance
PVC: For use in less demanding environments with required oil, chemical and lubricant resistance

M8 Cable Assemblies

M8 Series Male

TE Part Number	Description	Available In
2273000	M8 x 1.0 Straight plug Pigtail	3 positions PUR or PVC, Lengths: 1.5 m / 3.0 m / 5.0 m / 10.0 m
2273002	M8 x 1.0 Straight plug Pigtail	4 positions PUR or PVC, Lengths: 1.5 m / 3.0 m / 5.0 m / 10.0 m

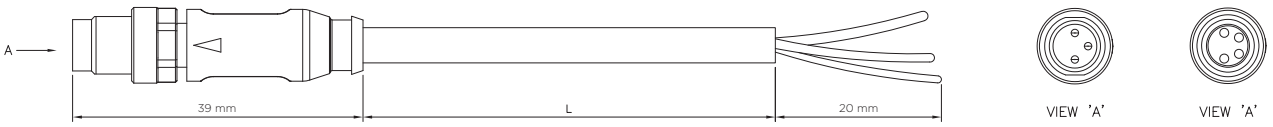

TE Part Number	Description	Available In
2273004	M8 x 1.0 Straight plug Pigtail Shielded	3 positions PUR or PVC, Lengths: 1.5 m / 3.0 m / 5.0 m / 10.0 m
2273006	M8 x 1.0 Straight plug Pigtail	4 positions PUR or PVC, Lengths: 1.5 m / 3.0 m / 5.0 m / 10.0 m

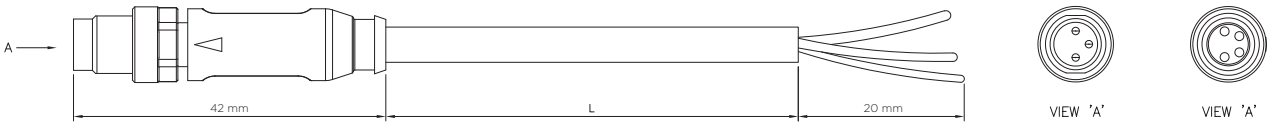

TE Part Number	Description	Available In
2273008	M8 x 1.0 Angled plug Pigtail	3 positions PUR or PVC, Lengths: 1.5 m / 3.0 m / 5.0 m / 10.0 m
2273010	M8 x 1.0 Angled plug Pigtail	4 positions PUR or PVC, Lengths: 1.5 m / 3.0 m / 5.0 m / 10.0 m

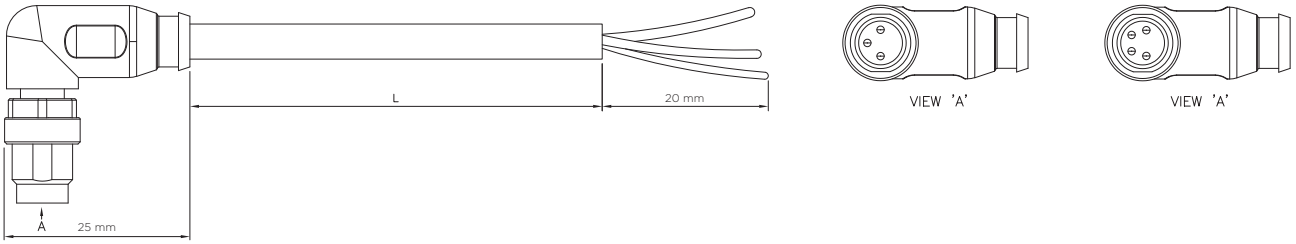

TE Part Number	Description	Available In
2273014	M8 Male Panel Mount Rear	3 positions Panel Mount, Lengths: 0.2 m
2273230	M8 Male Panel Mount Rear	4 positions Panel Mount, Length: 0.2 m

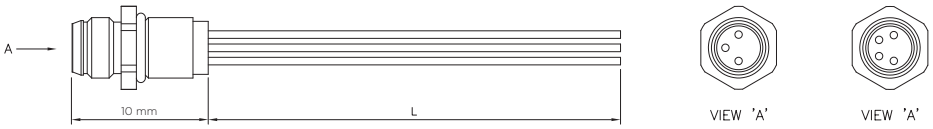

M8 Cable Assemblies

M8 Series Female

TE Part Number	Description	Available In
2273001	M8 x 1.0 Straight socket Pigtail	3 and 4 positions PUR or PVC, Lengths: 1.5 m / 3.0 m / 5.0 m / 10.0 m

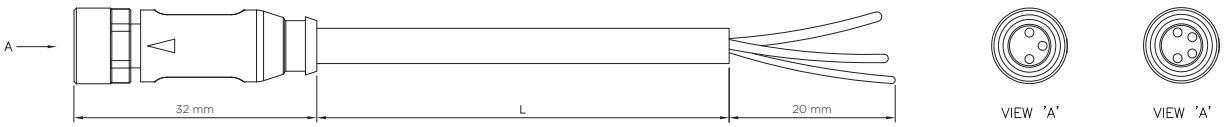

TE Part Number	Description	Available In
2273005	M8 x 1.0 Straight socket Pigtail Shielded	3 and 4 positions PUR or PVC, Lengths: 1.5 m / 3.0 m / 5.0 m / 10.0 m

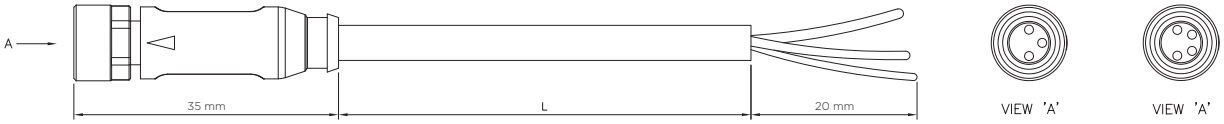

TE Part Number	Description	Available In
2273009	M8 x 1.0 Angled socket Pigtail	3 and 4 positions PUR or PVC, Lengths: 1.5 m / 3.0 m / 5.0 m / 10.0 m

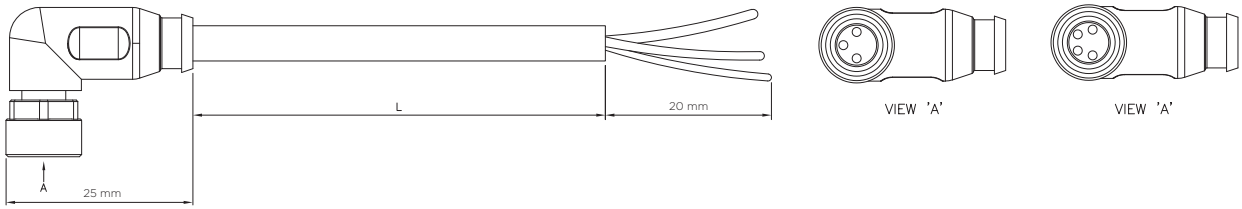

TE Part Number	Description	Available In
2273012	M8 x 1.0 Angled socket Pigtail LED	4 positions PUR or PVC, Lengths: 1.5 m / 3.0 m / 5.0 m / 10.0 m

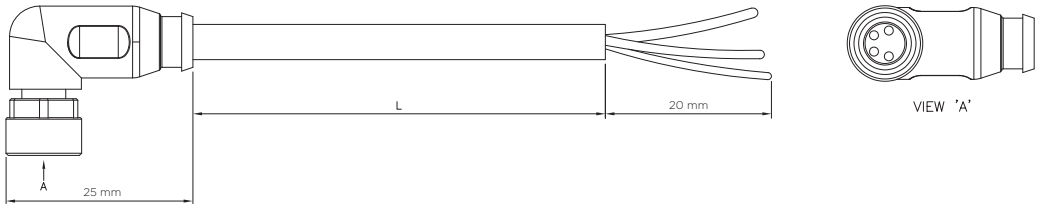

TE Part Number	Description	Available In
2273013	M8 Female Panel Mount Rear	3 positions Panel Mount, Length: 0.2 m
2273015	M8 Female Panel Mount Rear	4 positions Panel Mount, Length: 0.2 m

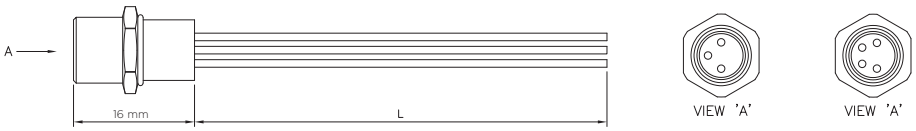

M12 Cable Assemblies

M12 Series Male Straight

TE Part Number	Description	Available In
2273022	M12 x 1.0 Straight plug Pigtail Unshielded	3 positions PUR or PVC, Lengths: 1.5 m / 3.0 m / 5.0 m / 10.0 m
2273028	M12 x 1.0 Straight plug Pigtail Unshielded	4 positions PUR or PVC, Lengths: 1.5 m / 3.0 m / 5.0 m / 10.0 m
2273034	M12 x 1.0 Straight plug Pigtail Unshielded	5 positions PUR or PVC, Lengths: 1.5 m / 3.0 m / 5.0 m / 10.0 m
2273040	M12 x 1.0 Straight plug Pigtail Unshielded	8 positions PUR, Lengths: 1.5 m / 3.0 m / 5.0 m / 10.0 m

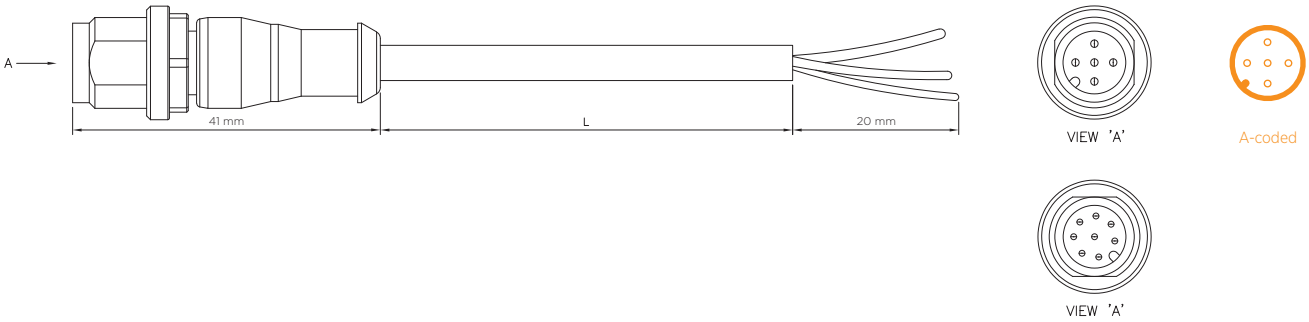

TE Part Number	Description	Available In
2273042	M12 x 1.0 Straight plug Pigtail Shielded	3 positions PUR or PVC, Lengths: 1.5 m / 3.0 m / 5.0 m / 10.0 m
2273044	M12 x 1.0 Straight plug Pigtail Shielded	4 positions PUR or PVC, Lengths: 1.5 m / 3.0 m / 5.0 m / 10.0 m
2273046	M12 x 1.0 Straight plug Pigtail Shielded	5 positions PUR or PVC, Lengths: 1.5 m / 3.0 m / 5.0 m / 10.0 m
2273048	M12 x 1.0 Straight plug Pigtail Shielded	8 positions PUR, Lengths: 1.5 m / 3.0 m / 5.0 m / 10.0 m

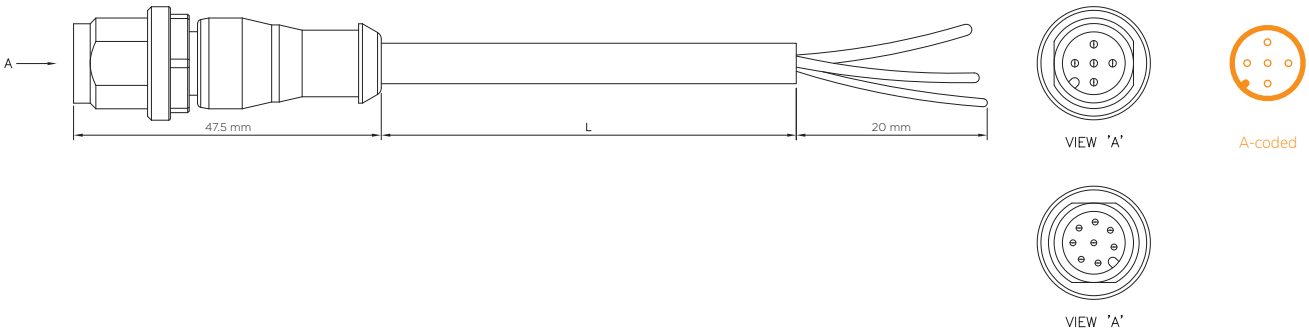

TE Part Number	Description	Available In
2273051	M12 Male Panel Mount Rear	4 positions PVC, Lengths: 0.2 m
2273052	M12 Male Panel Mount Rear	5 positions PVC, Length: 0.2 m

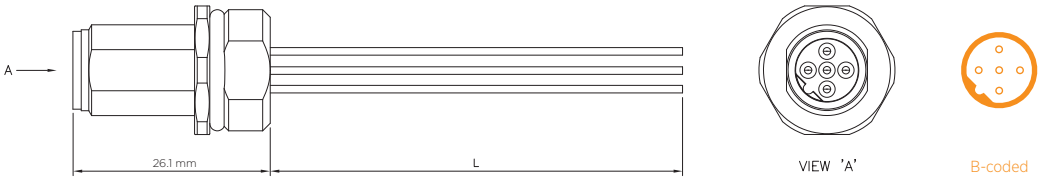

M12 Cable Assemblies

M12 Series Female Straight

TE Part Number	Description	Available In
2273023	M12 x 1.0 Straight socket Pigtail Unshielded	3 positions PUR or PVC, Lengths: 1.5 m / 3.0 m / 5.0 m / 10.0 m
2273029	M12 x 1.0 Straight socket Pigtail Unshielded	4 positions PUR or PVC, Lengths: 1.5 m / 3.0 m / 5.0 m / 10.0 m
2273035	M12 x 1.0 Straight socket Pigtail Unshielded	5 positions PUR or PVC, Lengths: 1.5 m / 3.0 m / 5.0 m / 10.0 m
2273041	M12 x 1.0 Straight socket Pigtail Unshielded	8 positions PUR, Lengths: 1.5 m / 3.0 m / 5.0 m / 10.0 m

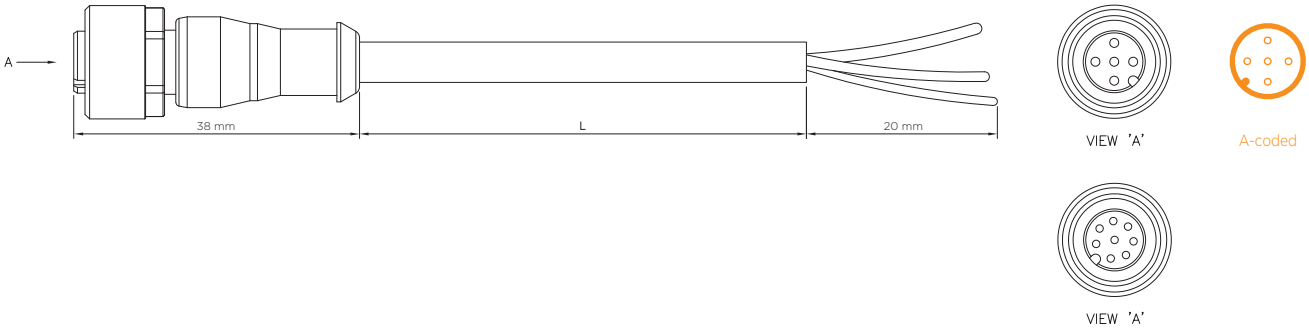

TE Part Number	Description	Available In
2273043	M12 x 1.0 Straight socket Pigtail Shielded	3 positions PUR or PVC, Lengths: 1.5 m / 3.0 m / 5.0 m / 10.0 m
2273045	M12 x 1.0 Straight socket Pigtail Shielded	4 positions PUR or PVC, Lengths: 1.5 m / 3.0 m / 5.0 m / 10.0 m
2273047	M12 x 1.0 Straight socket Pigtail Shielded	5 positions PUR or PVC, Lengths: 1.5 m / 3.0 m / 5.0 m / 10.0 m
2273049	M12 x 1.0 Straight socket Pigtail Shielded	8 positions PUR, Lengths: 1.5 m / 3.0 m / 5.0 m / 10.0 m

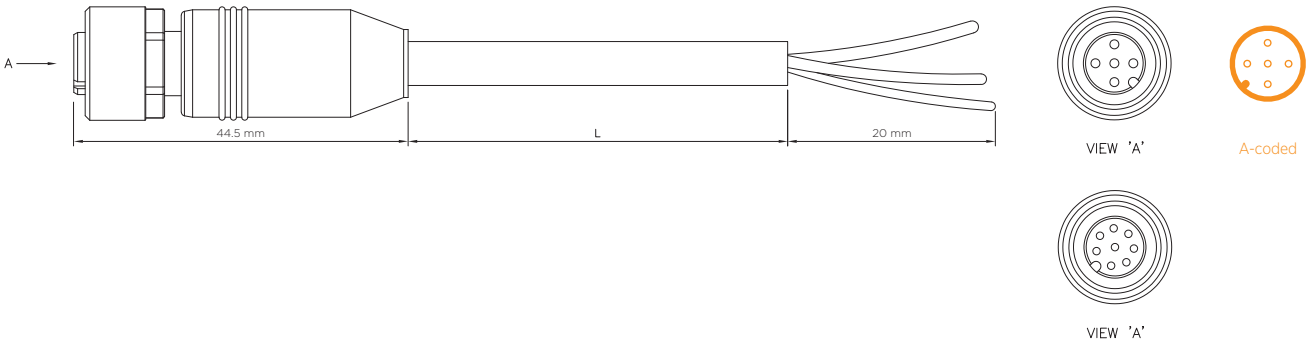

TE Part Number	Description	Available In
2273054	M12 Female Panel Mount Rear	4 positions PUR, Length: 0.2 m
2273055	M12 Female Panel Mount Rear	5 positions PUR, Length: 0.2 m

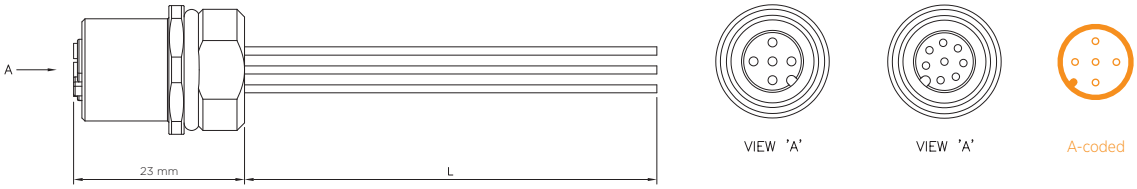

M12 Series Male Angled

TE Part Number	Description	Available In
2273076	M12 x 1.0 Angled plug Pigtail Unshielded	3 positions PUR or PVC, Lengths: 1.5 m / 3.0 m / 5.0 m / 10.0 m
2273082	M12 x 1.0 Angled plug Pigtail Unshielded	4 positions PUR or PVC, Lengths: 1.5 m / 3.0 m / 5.0 m / 10.0 m
2273088	M12 x 1.0 Angled plug Pigtail Unshielded	5 positions PUR or PVC, Lengths: 1.5 m / 3.0 m / 5.0 m / 10.0 m
2273094	M12 x 1.0 Angled plug Pigtail Unshielded	8 positions PUR, Lengths: 1.5 m / 3.0 m / 5.0 m / 10.0 m

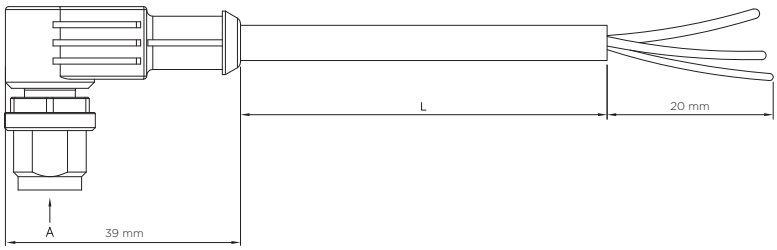

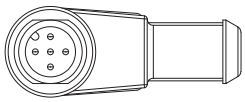

VIEW 'A'

A-coded

TE Part Number	Description	Available In
2273096	M12 x 1.0 Angled plug Pigtail Shielded	3 positions PUR or PVC, Lengths: 1.5 m / 3.0 m / 5.0 m / 10.0 m
2273098	M12 x 1.0 Angled plug Pigtail Shielded	4 positions PUR or PVC, Lengths: 1.5 m / 3.0 m / 5.0 m / 10.0 m
2273100	M12 x 1.0 Angled plug Pigtail Shielded	5 positions PUR or PVC, Lengths: 1.5 m / 3.0 m / 5.0 m / 10.0 m
2273102	M12 x 1.0 Angled plug Pigtail Shielded	8 positions PUR, Lengths: 1.5 m / 3.0 m / 5.0 m / 10.0 m

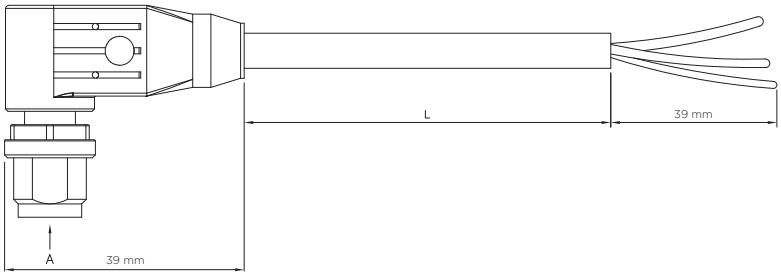

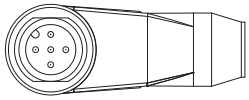

VIEW 'A'

A-coded

M12 Cable Assemblies

M12 Series Female Angled

TE Part Number	Description	Available In
2273077	M12 x 1.0 Angled socket Pigtail Unshielded	3 positions PUR or PVC, Lengths: 1.5 m / 3.0 m / 5.0 m / 10.0 m
2273083	M12 x 1.0 Angled socket Pigtail Unshielded	4 positions PUR or PVC, Lengths: 1.5 m / 3.0 m / 5.0 m / 10.0 m
2273089	M12 x 1.0 Angled socket Pigtail Unshielded	5 positions PUR or PVC, Lengths: 1.5 m / 3.0 m / 5.0 m / 10.0 m
2273095	M12 x 1.0 Angled socket Pigtail Unshielded	8 positions PUR, Lengths: 1.5 m / 3.0 m / 5.0 m / 10.0 m

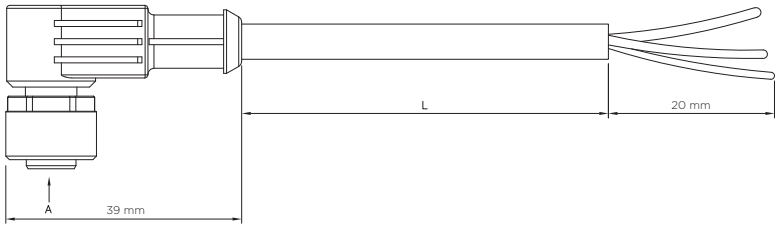

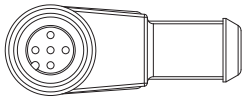

A-coded

TE Part Number	Description	Available In
2273097	M12 x 1.0 Straight socket Pigtail Shielded	3 positions PUR or PVC, Lengths: 1.5 m / 3.0 m / 5.0 m / 10.0 m
2273099	M12 x 1.0 Straight socket Pigtail Shielded	4 positions PUR or PVC, Lengths: 1.5 m / 3.0 m / 5.0 m / 10.0 m
2273101	M12 x 1.0 Straight socket Pigtail Shielded	5 positions PUR or PVC, Lengths: 1.5 m / 3.0 m / 5.0 m / 10.0 m
2273103	M12 x 1.0 Straight socket Pigtail Shielded	8 positions PUR, Lengths: 1.5 m / 3.0 m / 5.0 m / 10.0 m

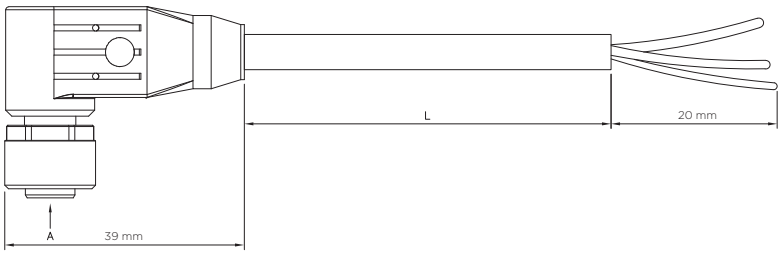

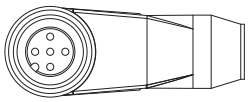

A-coded

TE Part Number	Description	Available In
2273104	M12 x 1.0 Straight socket Pigtail Shielded LED	4 positions PUR, 2 LED, Lengths: 1.5 m / 3.0 m / 5.0 m / 10.0 m
2273105	M12 x 1.0 Straight socket Pigtail Shielded LED	4 positions PUR or PVC, 3 LED, Lengths: 1.5 m / 3.0 m / 5.0 m / 10.0 m

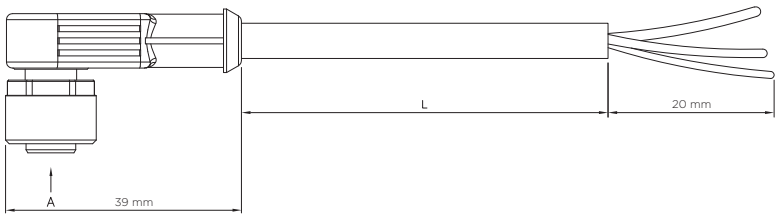

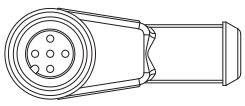

A-coded

M12 Series Male to Female Y-cables

TE Part Number	Description	Available In
2273107	M12 Y conn Male to 2 x M12 Female A	4 positions PUR or PVC, Lengths: 0.3 m / 0.6 m / 1.0 m / 1.5 m / 2.0 m

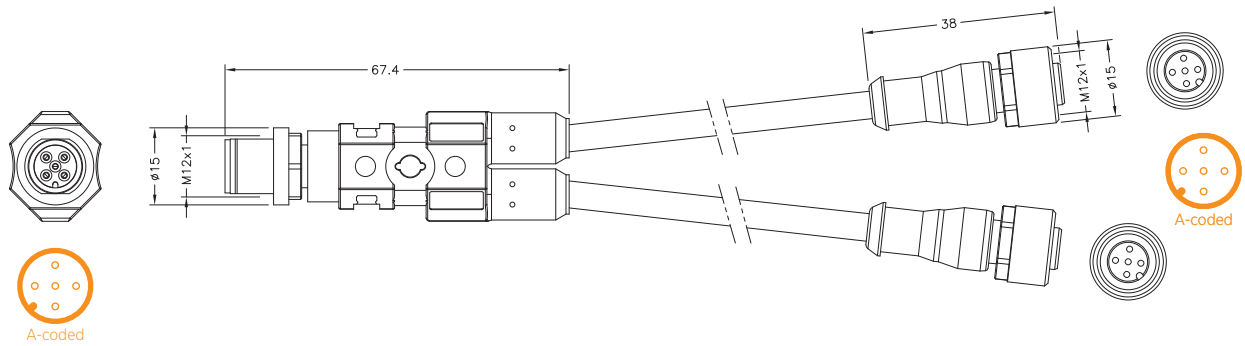

M8 to M12 Cable Assemblies

M8 Male to M12 Female Series

TE Part Number	Description	Available In
2273108	M8 Straight plug to M12 Straight socket Unshielded	3 positions PUR or PVC, Lengths: 0.3 m / 0.6 m / 1.0 m / 1.5 m / 2.0 m
2273109	M8 Strght plug to M12 Straight socket Unshielded	4 positions PUR or PVC, Lengths: 0.3 m / 0.6 m / 1.0 m / 1.5 m / 2.0 m

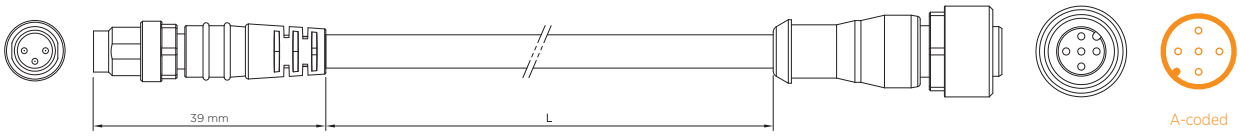

M8 Female to M12 Male Series

TE Part Number	Description	Available In
2273110	M8 Straight socket to M12 Straight plug Unshielded	3 positions PUR or PVC, Lengths: 0.3 m / 0.6 m / 1.0 m / 1.5 m / 2.0 m
2273111	M8 Straight socket to M12 Straight plug Unshielded	4 positions PUR or PVC, Lengths: 0.3 m / 0.6 m / 1.0 m / 1.5 m / 2.0 m

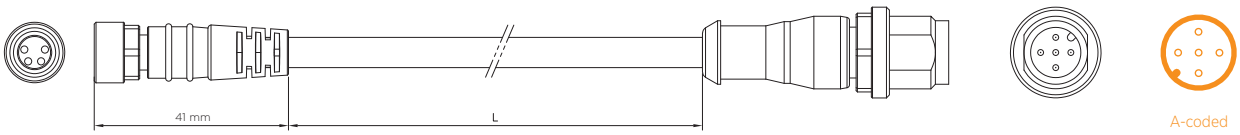

M12 to M12 Cable Assemblies

M12 Male to M12 Female Series

TE Part Number	Description	Available In
2273112	M12 Straight plug to M12 Straight socket Unshielded	3 positions PUR or PVC, Lengths: 0.3 m / 0.6 m / 1.0 m / 1.5 m / 2.0 m
2273113	M12 Straight plug to M12 Straight socket Unshielded	4 positions PUR or PVC, Lengths: 0.3 m / 0.6 m / 1.0 m / 1.5 m / 2.0 m
2273114	M12 Straight plug to M12 Straight socket Unshielded	5 positions PUR or PVC, Lengths: 0.3 m / 0.6 m / 1.0 m / 1.5 m / 2.0 m
2273115	M12 Straight plug to M12 Straight socket Unshielded	8 positions PUR, Lengths: 0.3 m / 0.6 m / 1.0 m / 1.5 m / 2.0 m

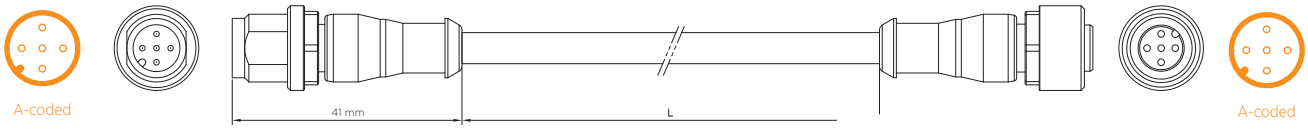

TE Part Number	Description	Available In
2273116	M12 Straight plug to M12 Angled socket Unshielded	3 positions PUR or PVC, Lengths: 0.3 m / 0.6 m / 1.0 m / 1.5 m / 2.0 m
2273117	M12 Straight plug to M12 Angled socket Unshielded	4 positions PUR or PVC, Lengths: 0.3 m / 0.6 m / 1.0 m / 1.5 m / 2.0 m
2273118	M12 Straight plug to M12 Angled socket Unshielded	5 positions PUR or PVC, Lengths: 0.3 m / 0.6 m / 1.0 m / 1.5 m / 2.0 m

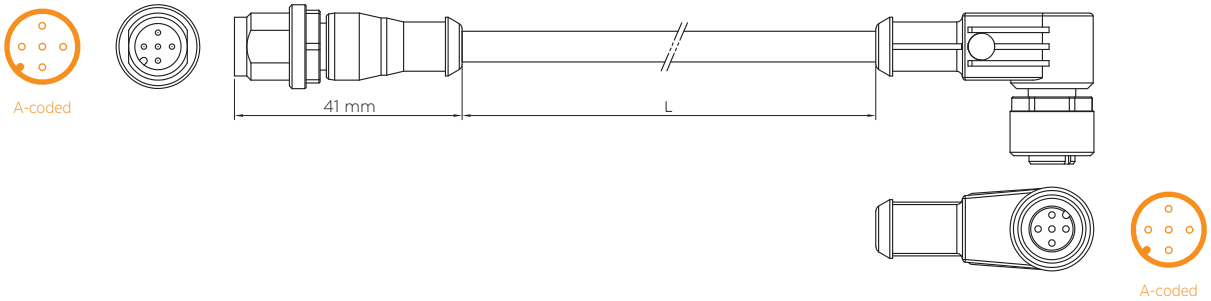

TE Part Number	Description	Available In
2273120	M12 Angled plug to M12 Straight socket Unshielded	3 positions PUR or PVC, Lengths: 0.3 m / 0.6 m / 1.0 m / 1.5 m / 2.0 m
2273121	M12 Angled plug to M12 Straight socket Unshielded	4 positions PUR or PVC, Lengths: 0.3 m / 0.6 m / 1.0 m / 1.5 m / 2.0 m
2273122	M12 Angled plug to M12 Straight socket Unshielded	5 positions PUR or PVC, Lengths: 0.3 m / 0.6 m / 1.0 m / 1.5 m / 2.0 m

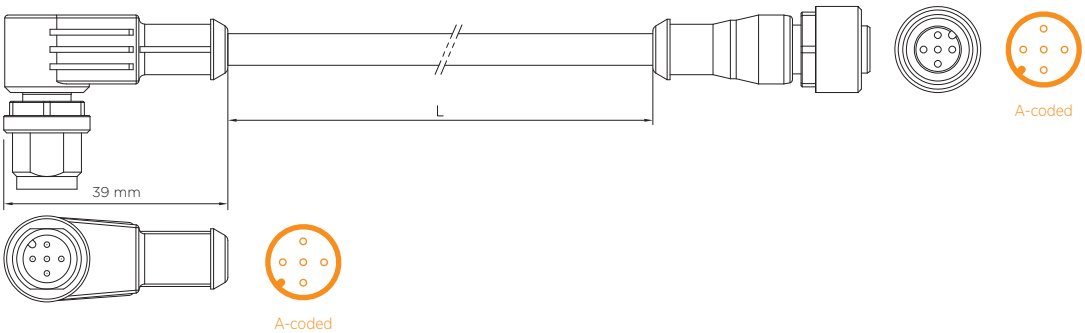

M8 to M8 Cable Assemblies

M8 Female to M8 Male Series LED

TE Part Number	Description	Available In
2273124	M8 Angled socket to M8 Straight plug 2 LED	3 positions PUR, PVC, PUR/PVC and Welding Spark resistant Lengths: 0.3 m / 0.6 m / 1.0 m / 1.5 m / 2.0 m

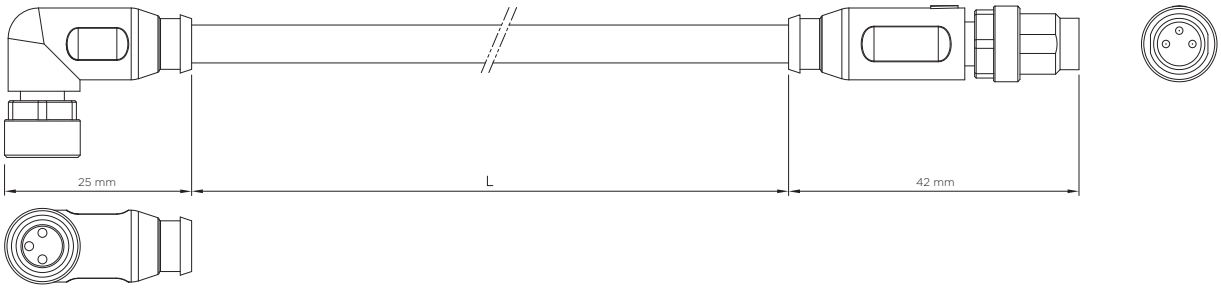

M12 to M12 Cable Assemblies

M12 Female to M12 Male Series LED

TE Part Number	Description	Available In
2273125	M12 Angled socket to M12 Straight plug 2 LED	3 positions PUR, PVC, PUR/PVC and Welding Spark resistant Lengths: 0.3 m / 0.6 m / 1.0 m / 1.5 m / 2.0 m

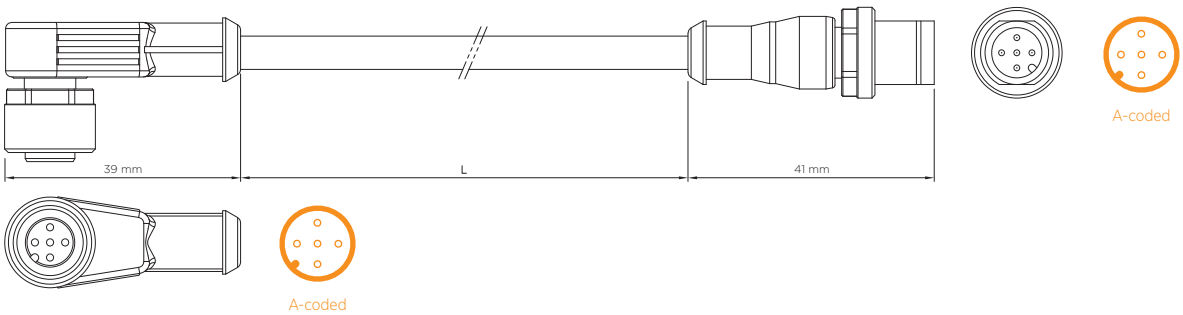

TE Part Number	Description	Available In
2273126	M12 Angled socket to M12 Straight plug 3 LED	4 positions PUR, PVC, PUR/PVC and Welding Spark resistant Lengths: 0.3 m / 0.6 m / 1.0 m / 1.5 m / 2.0 m
2273127	M12 Angled socket to M12 Straight plug 3 LED	5 positions PUR or PVC, PUR/PVC and Welding Spark resistant Lengths: 0.3 m / 0.6 m / 1.0 m / 1.5 m / 2.0 m

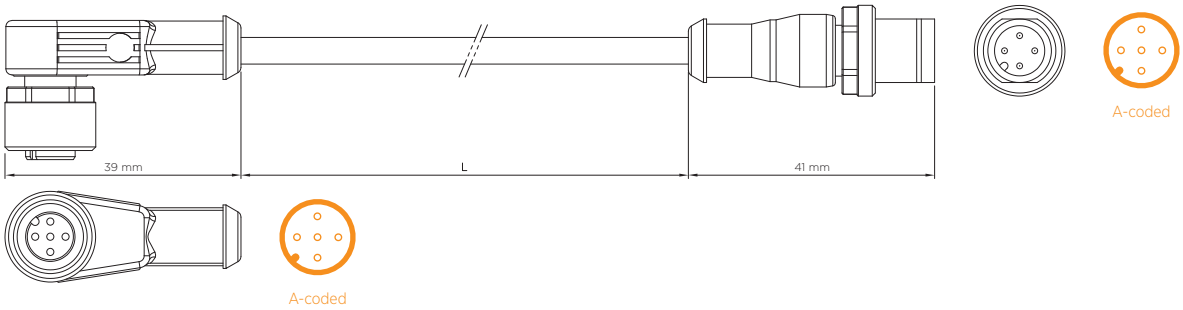

Cable Assembly Notes

I/O MODULES

Complementary to the M8/M12 cable assemblies and connectors, TE offers compact I/O modules for Industrial applications. The I/O modules are well accepted in the Industrial Automation industry and the concept of TE's I/O modules is simple, efficient and cost effective.

Standard (IEC):	IEC 61076-2-104 for all M8 series and IEC 61076-2-101 for all M12 series
Ambient temperature:	-25°C to +85°C for the connectors (for cable assemblies please refer to specific drawings)
Connector Contacts:	Current rating per contact is 4 A
Shielding: Yes/No	Refer to drawing
Suitable Cable Diameter:	Refer to drawing
IP Rating:	IP65/67
Sensor Type:	PNP

M8 – With Cables

M8 Series

Description	Positions	TE Part Number
PUR cable 3.0 m	3 pos 10 way	2273129-1
PUR cable 5.0 m	3 pos 10 way	2273129-2
PUR cable 10.0 m	3 pos 10 way	2273129-3
PUR cable 15.0 m	3 pos 10 way	2273129-4
PUR/PVC cable 3.0 m	3 pos 10 way	2-2273129-1
PUR/PVC cable 10.0 m	3 pos 10 way	2-2273129-2
PUR cable 5.0 m	3 pos 10 way	2273130-1
PUR cable 3.0 m	4 pos 10 way	2273132-1
PUR cable 10.0 m	4 pos 10 way	2273132-2
PUR/PVC cable 3.0 m	4 pos 10 way	1-2273132-1
PUR/PVC cable 10.0 m	4 pos 10 way	1-2273132-2
PUR cable 5.0 m	3 pos 4 way	2273133-1
PUR cable 10.0 m	3 pos 4 way	2273133-2
PUR/PVC cable 5.0 m	3 pos 4 way	1-2273133-1
PUR/PVC cable 5.0 m	3 pos 6 way	2273137-1
PUR cable 3.0 m	3 pos 6 way	2273138-1
PUR cable 5.0 m	3 pos 6 way	2273138-2
PUR/PVC cable 3.0 m	3 pos 8 way	2273142-1
PUR/PVC cable 5.0 m	3 pos 8 way	2273142-2
PUR/PVC cable 10.0 m	3 pos 8 way	2273142-3
PUR cable 3.0 m	3 pos 8 way	1-2273142-1
PUR cable 5.0 m	3 pos 8 way	1-2273142-2
PUR cable 10.0 m	3 pos 8 way	1-2273142-3
PUR cable 15.0 m	3 pos 8 way	1-2273142-4
PUR cable 5.0 m	3 pos 8 way	2273144-1
PUR cable 10.0 m	3 pos 8 way	2273144-2

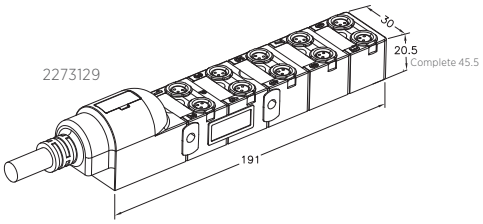

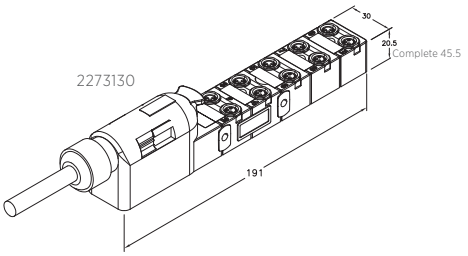

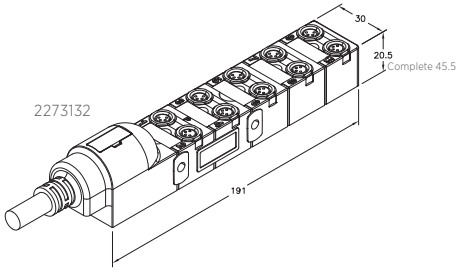

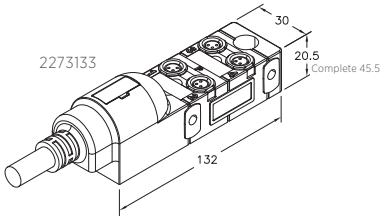

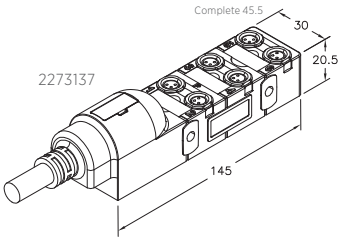

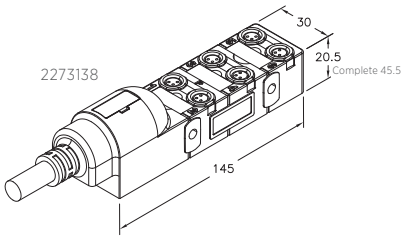

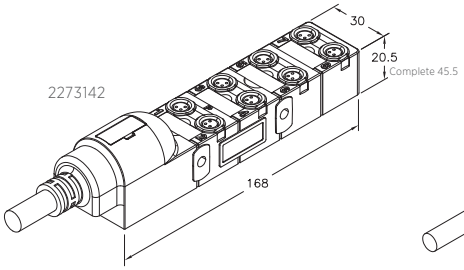

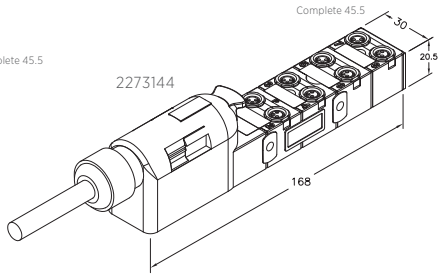

All dimensions in mm.

M8 – With M12 Plug Connection

M8 Series

Description	Positions	TE Part Number
Dist. box M8 3 pos 10 way M12	12 pos. conn	2273131-1
Dist. box M8 3 pos 04 way M12	12 pos.conn	2273134-1
Dist. box M8 3 pos 04 way M12	8 pos. conn	2273135-1
Dist. box M8 3 pos 06 way M12	12 pos. conn	2273139-1
Dist. box M8 3 pos 06 way M12	8 pos. conn	2273140-1
Dist. box M8 3 pos 08 way M12	12 pos. conn	2273146-1

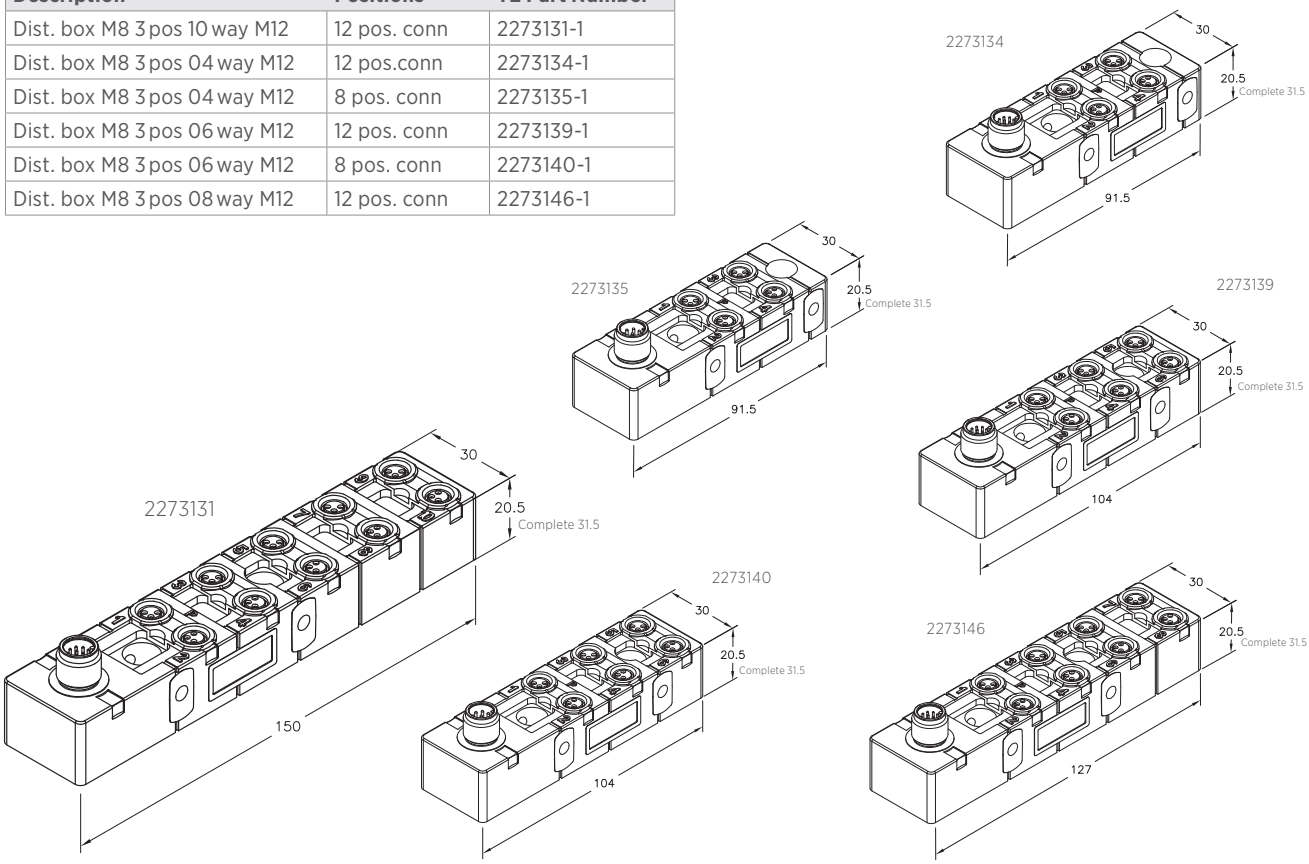

M8 – For Homerun Connection

M8 Series

Description	Positions	TE Part Number
Distr box M8 3 pos 10 way PNP	3 pos 10 way	2273128-1
Distr box M8 connection cap no cable	Nil	2273136-1
Inline or side mounting	3 pos 8 way	2273141-1
PUR cable 3.0 m	4 pos 8 way	2273147-1

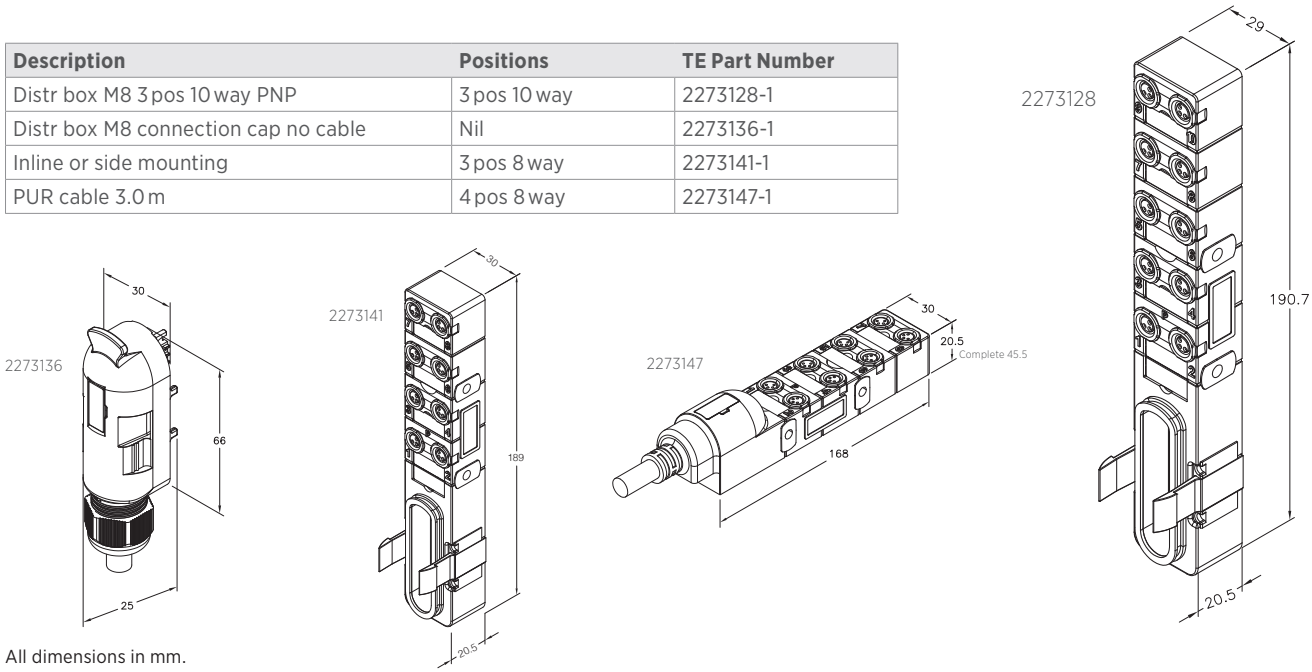

All dimensions in mm.

M12 – With Cable

M12 Series

Description	Positions	TE Part Number
PUR/PVC cable 5.0 m	4 pos 4 way	2273150-1
PUR/PVC cable 10.0 m	4 pos 4 way	2273150-2
PUR/PVC cable 5.0 m	5 pos 4 way	2273153-1
PUR/PVC cable 10.0 m	5 pos 4 way	2273153-2
With PUR/PV Homerun Cable 10.0 m	5 pos 4 way	2273155-1
PUR/PVC cable 3.0 m	4 pos 8 way	2273157-1
PUR/PVC cable 5.0 m	4 pos 8 way	2273157-2
PUR/PVC cable 10.0 m	4 pos 8 way	2273157-3
PUR/PVC cable 15.0 m	4 pos 8 way	2273157-4
PUR/PVC cable 3.0 m	5 pos 8 way	2273163-1
PUR/PVC cable 5.0 m	5 pos 8 way	2273163-2
PUR/PVC cable 10.0 m	5 pos 8 way	2273163-3
PUR/PVC cable 15.0 m	5 pos 8 way	2273163-4
PUR/PVC cable 20.0 m	5 pos 8 way	2273163-5
PUR cable 3.0 m	5 pos 8 way	1-2273163-1
PUR cable 5.0 m	5 pos 8 way	1-2273163-2
PUR cable 10.0 m	5 pos 8 way	1-2273163-3
PUR cable 15.0 m	5 pos 8 way	1-2273163-4
PUR cable 20.0 m	5 pos 8 way	1-2273163-5
PUR/PVC cable 5.0 m	5 pos 8 way	2273164-1

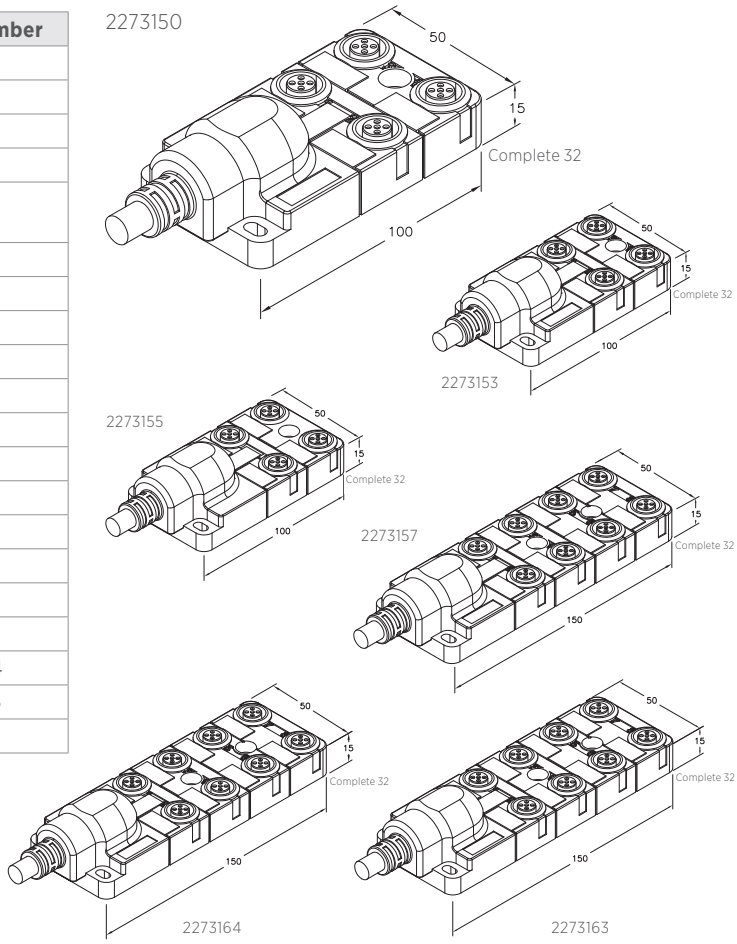

M12 – With M12/M23 Plug Connection

M12 Series

Description	Positions	TE Part Number
Without homerun cable	4 pos 8 way	2273158-1
Distr box M12 4-5 pos 8 way M12/12p PNP	4-5 pos 8 way	2273161-1
Distr box M12 5 pos 4 way M23/19p PNP	5 pos 4 way	2273165-1

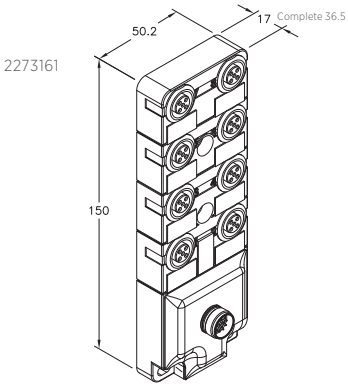

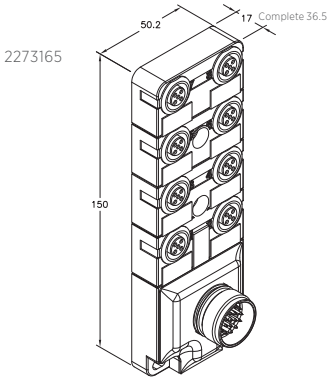

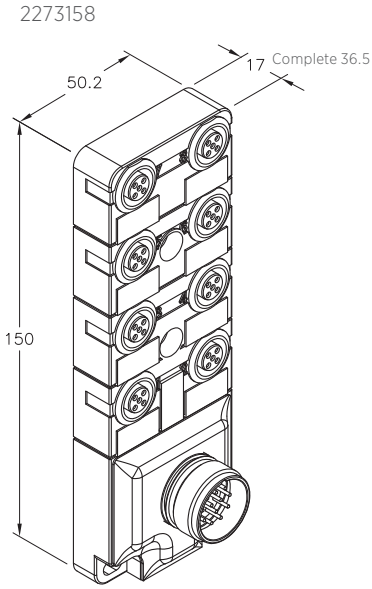

M12 – No Cable/With Cable Gland

M12 Series

Description	Positions	TE Part Number
With plug cap	4 pos 4 way	2273151-1
Without homerun cable	5 pos 4 way	2273152-1
With plug cap	5 pos 4 way	2273154-1
Without homerun cable	4 pos 8 way	2273156-1
With plug cap	4 pos 8 way	2273159-1
With plug cap	4 pos 8 way	2273160-1
Without homerun cable	5 pos 8 way	2273162-1
With plug cap	5 pos 8 way	2273166-1
With plug cap	5 pos 8 way	2273167-1

2273151

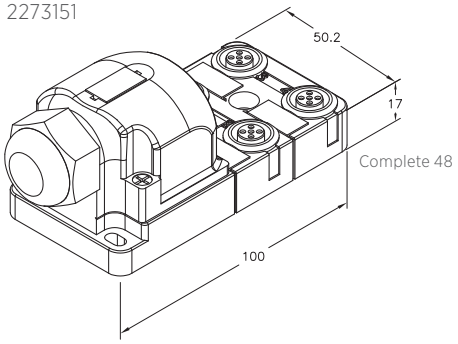

2273152

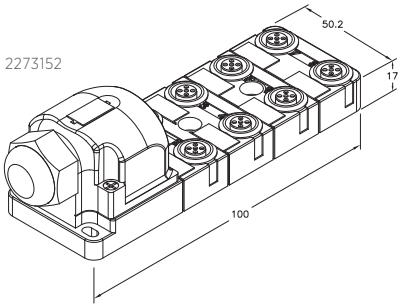

2273154

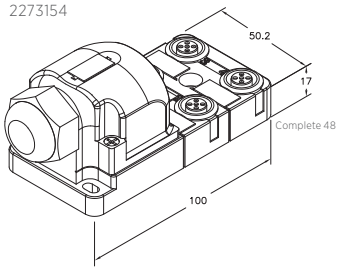

2273156

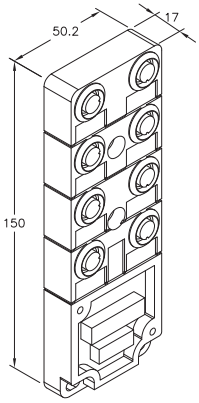

2273159

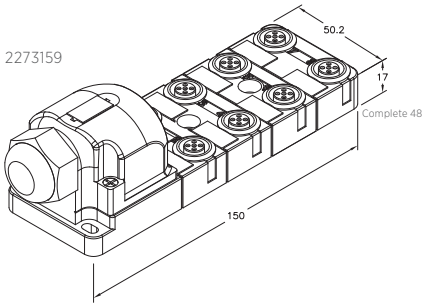

2273160

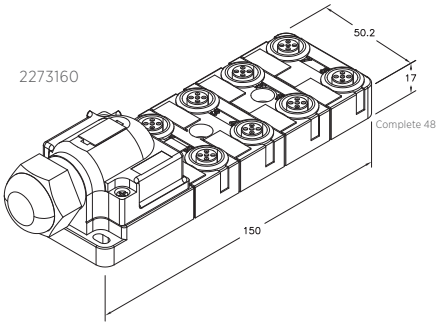

2273162

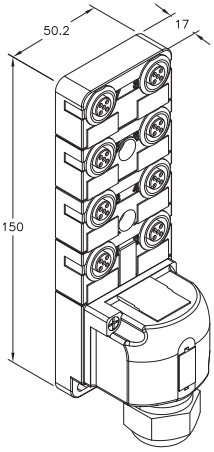

2273166

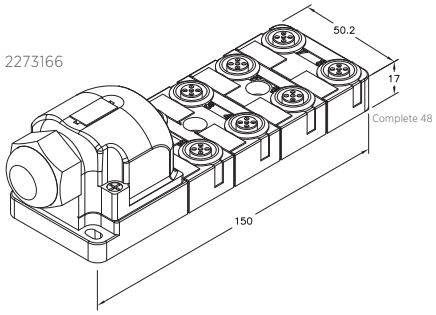

2273167

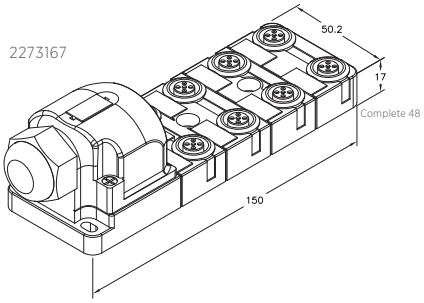

All dimensions in mm.

I/O Module Notes

M8/M12 Website

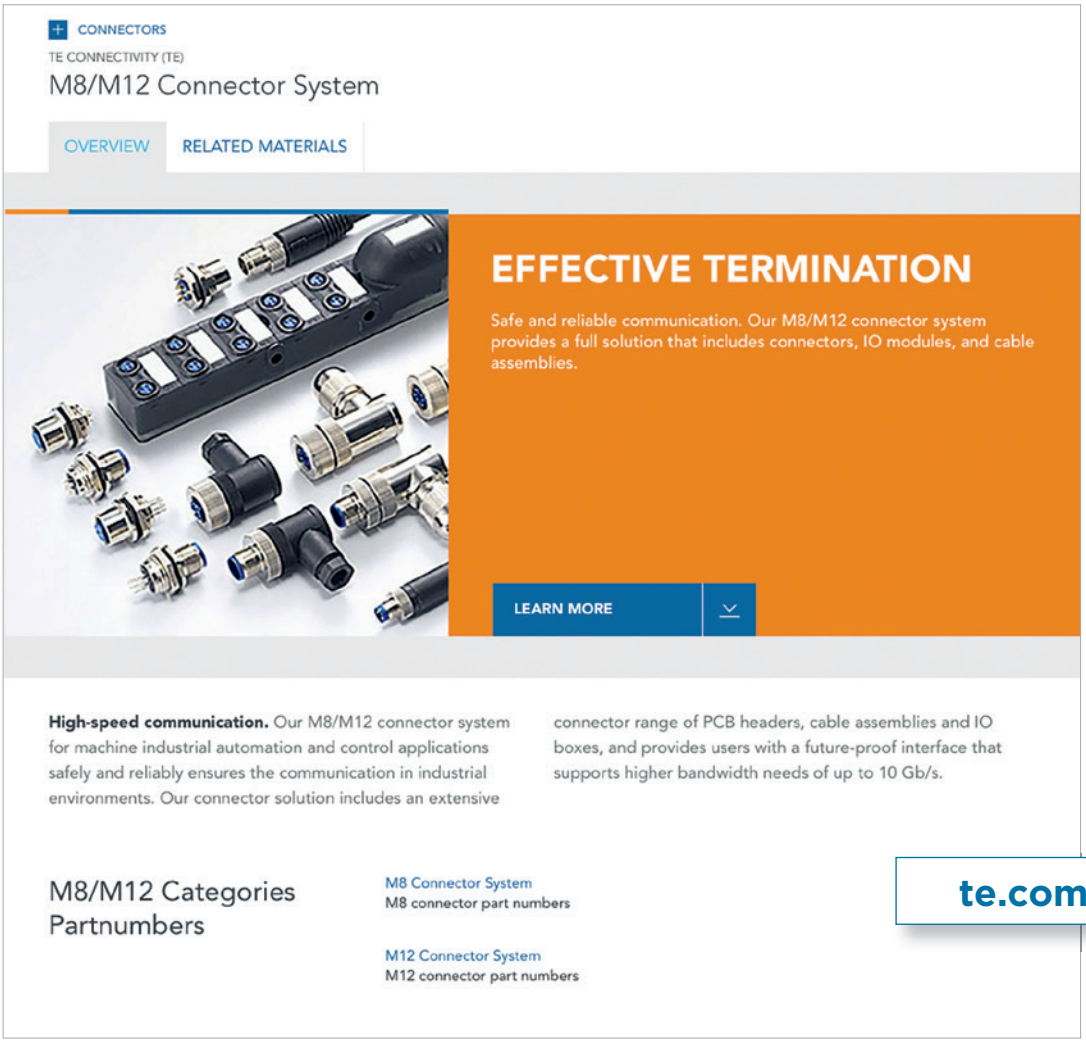

te.com/m8m12

FIND THE PART NUMBERS AND INFORMATION YOU ARE LOOKING FOR

Additional Information

Read more about the connector and cable assembly portfolio on the M8/M12 website - in many different languages.

Download the product flyer

Find all information you need at one glance in the M8/M12 connector system product flyer.

View the video

See our M8/M12 connector system video and learn about the product features, benefits and applications.

Find the products

If you are looking for a specific product or part number, the M8/M12 website is the place to look. Find the images, drawings, technical specifications and much more.

te.com

TE, TE Connectivity, TE connectivity (logo) and Every Connection Counts are trademarks. All other logos, products and/or company names referred to herein might be trademarks of their respective owners.

While TE has made every reasonable eff ort to ensure the accuracy of the information in this brochure, TE does not guarantee that it is error-free, nor does TE make any other representation, warranty, or guarantee that the information is accurate, correct, reliable, or current. TE reserves the right to make any adjustments to the information contained herein at any time without notice. TE expressly disclaims all implied warranties regarding the information contained herein, including, but not limited to, any implied warranties of merchantability or fi tness for a particular purpose. The dimensions in this catalog are for reference purposes only and are subject to change without notice. Specifi cations are subject to change without notice. Consult TE for the latest dimensions and design specifications.

© 2016 TE Connectivity Ltd. family of companies All Rights Reserved.

1-1773701-8 11/2016 Original: WR

CATALOG

TE Connectivity
Automation & Control

Pfnorstr. 1
D-64293 Darmstadt
Germany

+49 6151 607 1999

www.te.com

Общество с ограниченной ответственностью «МосЧип» ИНН 7719860671 / КПП 771901001
Адрес: 105318, г.Москва, ул.Щербаковская д.3, офис 1107

Данный компонент на территории Российской Федерации

Вы можете приобрести в компании MosChip.

Для оперативного оформления запроса Вам необходимо перейти по данной ссылке:

http://moschip.ru/get-element

Вы можете разместить у нас заказ для любого Вашего проекта, будь то серийное производство или разработка единичного прибора.

В нашем ассортименте представлены ведущие мировые производители активных и пассивных электронных компонентов.

Нашей специализацией является поставка электронной компонентной базы двойного назначения, продукции таких производителей как XILINX, Intel (ex.ALTERA), Vicor, Microchip, Texas Instruments, Analog Devices, Mini-Circuits, Amphenol, Glenair.

Сотрудничество с глобальными дистрибьюторами электронных компонентов, предоставляет возможность заказывать и получать с международных складов практически любой перечень компонентов в оптимальные для Вас сроки.

На всех этапах разработки и производства наши партнеры могут получить квалифицированную поддержку опытных инженеров.

Система менеджмента качества компании отвечает требованиям в соответствии с ГОСТ Р ИСО 9001, ГОСТ РВ 0015-002 и ЭС РД 009

Офис по работе с юридическими лицами:

105318, г.Москва, ул.Щербаковская д.3, офис 1107, 1118, ДЦ «Щербаковский»

Телефон: +7 495 668-12-70 (многоканальный)

Факс: +7 495 668-12-70 (доб.304)

E-mail: info@moschip.ru

Skype отдела продаж:
moschip.ru
moschip.ru_4
moschip.ru_6
moschip.ru_9