Ceramic Disc Capacitors
Class 1 and 2, 500 V_{DC}, General Purpose

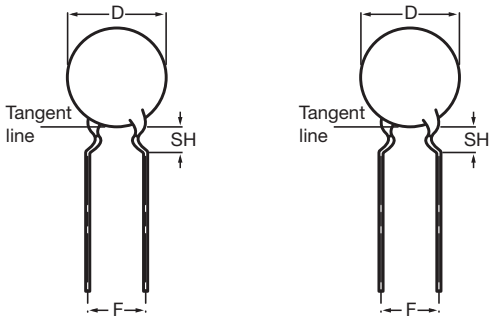

Capacitors with 5 mm (0.20") and 7.5 mm (0.30") lead spacing

QUICK REFERENCE DATA		
DESCRIPTION	CLASS 1 (C0G (NP0), SL0)	CLASS 2 (YP5, Z5U, Y5V, X5F)
Voltage (V_{DC})	500	
Min. Capacitance (pF)	10	100
Max. Capacitance (pF)	82	22 000
Mounting	Through hole	

MARKING

Marking indicates capacitance value and tolerance in accordance with "EIA 198".

The capacitors meet the essential requirements of "EIA 198". Unless stated otherwise all electrical values apply at an ambient temperature of 25 °C ± 3 °C, at normal atmospheric conditions.

OPERATING TEMPERATURE RANGE

Class 1, - 55 °C to + 125 °C

Class 2, - 55 °C to + 85 °C

TEMPERATURE COEFFICIENTS

Class 1, C0G (NP0); SL0

Class 2, Y5P; Z5U; Y5V; X5F

SECTIONAL SPECIFICATIONS

Class 1, IEC 60 384-8

Class 2, IEC 60 384-9

EIA 198

CLIMATIC CATEGORY

Class 1, 55/125/21

Class 2, 10/85/21, 30/85/21 and 55/85/21

FEATURES

- Low losses
- High stability
- High capacitance in small size
- Kinked (preferred) or straight leads
- Compliant to RoHS directive 2002/95/EC

Pb e3 RoHS COMPLIANT

APPLICATIONS

- Bypassing
- Coupling
- Resonant circuit

DESIGN

The capacitors consist of a ceramic disc both sides of which are silver-plated. Connection leads are made of tinned copper having a diameter of 0.6 mm.

The capacitors have inward kinked leads with a spacing of 5 mm (0.200") or 7.5 mm (0.300") and a lead length from 4 mm to 30 mm. Encapsulation is made of phenolic resin.

CAPACITANCE RANGE

Class 1, at 1 MHz, 1.2 V_{RMS}; 10 pF to 82 pF

Class 2, at 1 kHz, 1 ± 0.2 V_{RMS}; 100 pF to 22 000 pF

1 kHz, 1 V_{RMS} ± 0.2 V_{RMS} for capacitance values higher than 1000 pF

RATED DC VOLTAGE

500 V

DIELECTRIC STRENGTH

250 % of rated voltage

INSULATION RESISTANCE AT 500 V_{DC}

≥ 10 000 MΩ

TOLERANCE ON CAPACITANCE

± 5 %; ± 10 %; ± 20 %; + 80/- 20 %

DISSIPATION FACTOR

Class 1, C ≤ 30 pF; ≤ 20 x (10/C + 0.7) x 10^{-4} maximum

Class 1, C > 30 pF; ≤ 0.2 %

Class 2, ≤ 3.0 %

ORDERING INFORMATION (PREFERED TYPES), CLASS 1, 500 V_{DC}, KINKED					
C (pF)	TOL. (%)	$D_{MAX.}$ (mm)	LEAD SPACING (mm)	SH [1] (mm)	CLEAR TEXT CODE 13TH DIGIT: T = REEL; U = AMMO; 3 = BULK 16TH DIGIT: R = RoHS COMPLIANT
CLASS 1 NP0					
10	± 5	5.0	5.0	4.0	D100J20C0GL6.J5.
12					D120J20C0GL6.J5.
15					D150J20C0GL6.J5.
18		6.5			D180J25C0GL6.J5.
22					D220J25C0GL6.J5.
27					D270J25C0GL6.J5.
CLASS 1 SL0					
33	± 5	5.0	5.0	4.0	D330J20SL0L6.J5.
39					D390J20SL0L6.J5.
47					D470J20SL0L6.J5.
56					D560J20SL0L6.J5.
68		6.5			D680J25SL0L6.J5.
82					D820J25SL0L6.J5.

Notes

[1] SH = seated height

- Maximum thickness 4.0 mm
- Lead style codes refer to inward kinked leads. Other styles available on request

ORDERING INFORMATION (PREFERED TYPES), CLASS 2, 500 V_{DC}, KINKED					
C (pF)	TOL. (%)	$D_{MAX.}$ (mm)	LEAD SPACING (mm)	SH [1] (mm)	CLEAR TEXT CODE 13TH DIGIT: T = REEL; U = AMMO; 3 = BULK 16TH DIGIT: R = RoHS COMPLIANT
CLASS 2 Y5P					
100	± 10	5	5	4.0	D101K20Y5PL6.J5.
150					D151K20Y5PL6.J5.
220					D221K20Y5PL6.J5.
330					D331K20Y5PL6.J5.
470					D471K20Y5PL6.J5.
680		6.5			D681K25Y5PL6.J5.
1000					D102K25Y5PL6.J5.
1500		7.5			D152K29Y5PL6.J5.
2200		8.5			D222K33Y5PL6.J5.
3300		10			D332K39Y5PL6.J5.
4700		11			D472K43Y5PL6.J5.
6800		13.5	7.5		D682K53Y5PL6.J7
10 000		17.5			D103K69Y5PL6.J7.
CLASS 2 Y5V					
1000	+ 80/- 20	5	5	4.0	D102Z20Y5VL6.J5.
1500					D152Z20Y5VL6.J5.
2200		6.5			D222Z25Y5VL6.J5.
3300					D322Z25Y5VL6.J5.
4700		7.5			D472Z29Y5VL6.J5.
6800		8.5			D682Z33Y5VL6.J5.
10 000		10.0			D103Z39Y5VL6.J5.
15 000		11.0			D153Z43Y5VL6.J5.
22 000		13.5	7.5		D223Z53Y5VL6.J7.

ORDERING INFORMATION (PREFERED TYPES), CLASS 2, 500 V_{DC}, KINKED					
C (pF)	TOL. (%)	$D_{MAX.}$ (mm)	LEAD SPACING (mm)	SH [1] (mm)	CLEAR TEXT CODE 13TH DIGIT: T = REEL; U = AMMO; 3 = BULK 16TH DIGIT: R = RoHS COMPLIANT
CLASS 2 Z5U					
1000	± 20	5.0	5.0	4.0	D102M20Z5UL6.J5.
1500					D152M25Z5UL6.J5.
2200					D222M25Z5UL6.J5.
3300		7.5			D332M29Z5UL6.J5.
4700		8.5			D472M33Z5UL6.J5.
6800		10.0			D682M39Z5UL6.J5.
10 000		11.0			D103M43Z5UL6.J5.
15 000		13.5	7.5		D153M53Z5UL6.J7.
22 000		15.0			D223M59Z5UL6.J7.
CLASS 2 X5F					
1 00	± 10	5.0	5.0	4.0	D101K20X5FL6.J5.R.
2 20					D221K20X5FL6.J5.R.
330					D331K20X5FL6.J5.R.
470		6.5			D471K25X5FL6.J5.R.
680					D681K25X5FL6.J5.R.
1000		7.5			D102K29X5FL6.J5.R.
2200		10.0			D222K39X5FL6.J5.R.
3300		12.0	7.5		D332K47X5FL6.J7R.
4700		13.5		4.8	D472K53X5FL6.J7R.

Note

[1] SH = seated height

- Maximum thickness 4.0 mm
- Lead style codes refer to inward kinked leads. Other styles available on request

PACKAGING				
$D_{MAX.}$ (mm)	SIZE CODE	PACKAGING QUANTITIES		
		BULK	REEL	AMMO
5.0 (0.20")	20	1000	2000	2000
6.5 (0.25")	25			
7.5 (0.29")	29			
8.5 (0.33")	33			
10.0 (0.39")	39			
11.0 (0.43")	43			
12.0 (0.47")	47			
13.5 (0.53")	53	500	-	-
15.0 (0.59")	59			
17.5 (0.69")	69			

Note

- The capacitors are supplied in bulk packaging (cardboard boxes), in tape on reel or in ammopack.

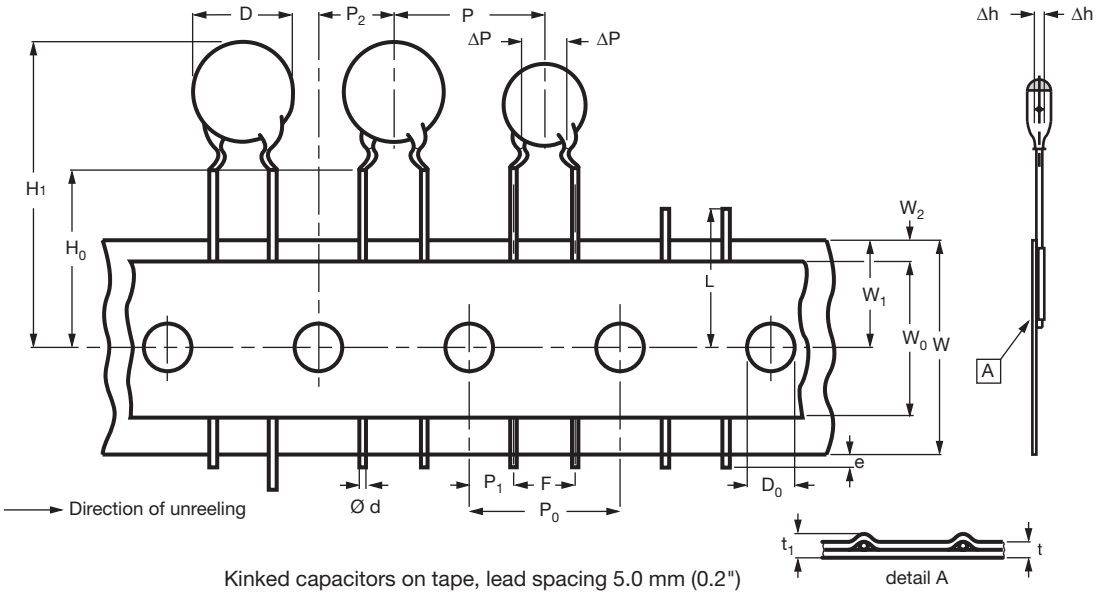

Kinked capacitors on tape, lead spacing 5.0 mm (0.2")

DIMENSIONS OF TAPE			
SYMBOL	PARAMETER	DIMENSIONS (mm)	
		NOMINAL	TOLERANCE
D	Body diameter	11.0 maximum	-
d	Lead diameter	0.6	± 0.05
P [(1)]	Pitch between capacitors	12.7	± 1.0
P_0	Feed-hole pitch	12.7	± 0.3
ΔP	Plane deviation	1.0 maximum	-
P_1 [(2)]	Feed-hole center to lead center	3.85	± 0.7
P_2 [(2)]	Feed-hole center to component center	6.35	± 1.3
F	Lead spacing	5.0	0.6 - 0.4
Δh	Component alignment	0	± 1.0
W	Tape width	18.0	1.0 - 0.5
W_0	Hold-down tape width	5.0 minimum	-
W_1	Hole position	9.0	0.75 - 0.5
W_2	Hold-down tape margin	3.0 maximum	-
H_0	Height to seating plane	16.0	± 0.5
H_1	Maximum component height	32.0	-
e	Lead end protrusion	1.0 maximum	-
L	Maximum length of snipped lead	11.0	-
D_0	Feed-hole diameter	4.0	± 0.2
t	Total tape thickness	0.9 maximum	-
t_1	Maximum thickness of tape and wires	1.5 maximum	-

Notes

(1) Cumulative pitch error: ± ≤ 1 mm/20 pitches

(2) Obliquity maximum 3°

REEL AND TAPE DATA in millimeters

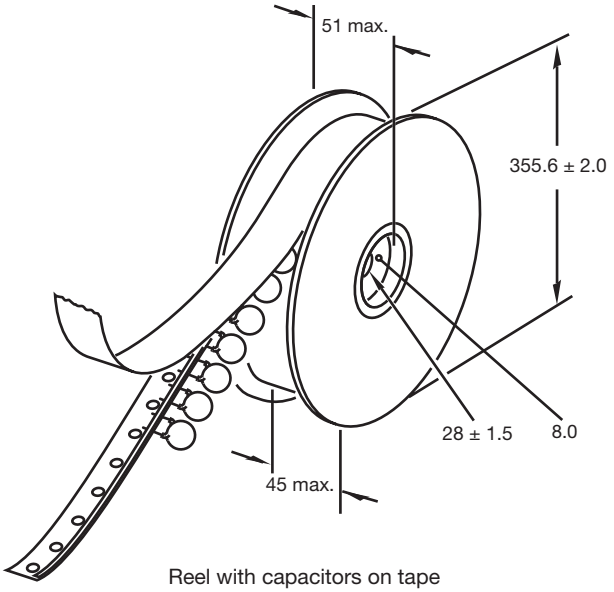

Reel with capacitors on tape

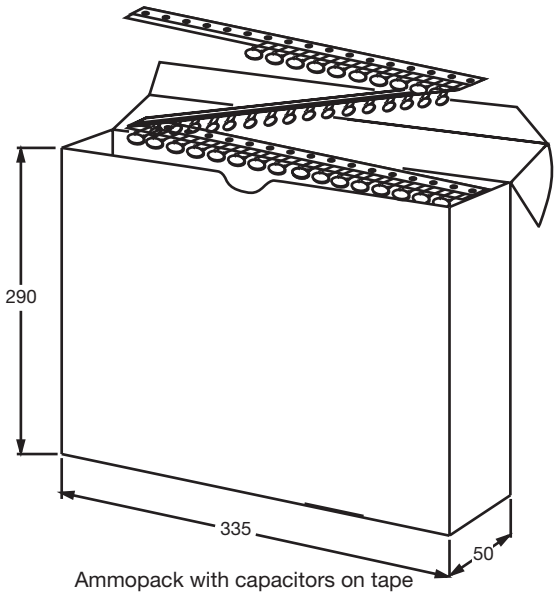

Ammopack with capacitors on tape

Disclaimer

ALL PRODUCT, PRODUCT SPECIFICATIONS AND DATA ARE SUBJECT TO CHANGE WITHOUT NOTICE TO IMPROVE RELIABILITY, FUNCTION OR DESIGN OR OTHERWISE.

Vishay Intertechnology, Inc., its affiliates, agents, and employees, and all persons acting on its or their behalf (collectively, "Vishay"), disclaim any and all liability for any errors, inaccuracies or incompleteness contained in any datasheet or in any other disclosure relating to any product.

Vishay makes no warranty, representation or guarantee regarding the suitability of the products for any particular purpose or the continuing production of any product. To the maximum extent permitted by applicable law, Vishay disclaims (i) any and all liability arising out of the application or use of any product, (ii) any and all liability, including without limitation special, consequential or incidental damages, and (iii) any and all implied warranties, including warranties of fitness for particular purpose, non-infringement and merchantability.

Statements regarding the suitability of products for certain types of applications are based on Vishay's knowledge of typical requirements that are often placed on Vishay products in generic applications. Such statements are not binding statements about the suitability of products for a particular application. It is the customer's responsibility to validate that a particular product with the properties described in the product specification is suitable for use in a particular application. Parameters provided in datasheets and/or specifications may vary in different applications and performance may vary over time. All operating parameters, including typical parameters, must be validated for each customer application by the customer's technical experts. Product specifications do not expand or otherwise modify Vishay's terms and conditions of purchase, including but not limited to the warranty expressed therein.

Except as expressly indicated in writing, Vishay products are not designed for use in medical, life-saving, or life-sustaining applications or for any other application in which the failure of the Vishay product could result in personal injury or death. Customers using or selling Vishay products not expressly indicated for use in such applications do so at their own risk. Please contact authorized Vishay personnel to obtain written terms and conditions regarding products designed for such applications.

No license, express or implied, by estoppel or otherwise, to any intellectual property rights is granted by this document or by any conduct of Vishay. Product names and markings noted herein may be trademarks of their respective owners.

Material Category Policy

Vishay Intertechnology, Inc. hereby certifies that all its products that are identified as RoHS-Compliant fulfill the definitions and restrictions defined under Directive 2011/65/EU of The European Parliament and of the Council of June 8, 2011 on the restriction of the use of certain hazardous substances in electrical and electronic equipment (EEE) - recast, unless otherwise specified as non-compliant.

Please note that some Vishay documentation may still make reference to RoHS Directive 2002/95/EC. We confirm that all the products identified as being compliant to Directive 2002/95/EC conform to Directive 2011/65/EU.

Vishay Intertechnology, Inc. hereby certifies that all its products that are identified as Halogen-Free follow Halogen-Free requirements as per JEDEC JS709A standards. Please note that some Vishay documentation may still make reference to the IEC 61249-2-21 definition. We confirm that all the products identified as being compliant to IEC 61249-2-21 conform to JEDEC JS709A standards.

Общество с ограниченной ответственностью «МосЧип» ИНН 7719860671 / КПП 771901001
Адрес: 105318, г.Москва, ул.Щербаковская д.3, офис 1107

Данный компонент на территории Российской Федерации

Вы можете приобрести в компании MosChip.

Для оперативного оформления запроса Вам необходимо перейти по данной ссылке:

http://moschip.ru/get-element

Вы можете разместить у нас заказ для любого Вашего проекта, будь то серийное производство или разработка единичного прибора.

В нашем ассортименте представлены ведущие мировые производители активных и пассивных электронных компонентов.

Нашей специализацией является поставка электронной компонентной базы двойного назначения, продукции таких производителей как XILINX, Intel (ex.ALTERA), Vicor, Microchip, Texas Instruments, Analog Devices, Mini-Circuits, Amphenol, Glenair.

Сотрудничество с глобальными дистрибьюторами электронных компонентов, предоставляет возможность заказывать и получать с международных складов практически любой перечень компонентов в оптимальные для Вас сроки.

На всех этапах разработки и производства наши партнеры могут получить квалифицированную поддержку опытных инженеров.

Система менеджмента качества компании отвечает требованиям в соответствии с ГОСТ Р ИСО 9001, ГОСТ РВ 0015-002 и ЭС РД 009

Офис по работе с юридическими лицами:

105318, г.Москва, ул.Щербаковская д.3, офис 1107, 1118, ДЦ «Щербаковский»

Телефон: +7 495 668-12-70 (многоканальный)

Факс: +7 495 668-12-70 (доб.304)

E-mail: info@moschip.ru

Skype отдела продаж:
moschip.ru
moschip.ru_4
moschip.ru_6
moschip.ru_9