A700 Polymer Aluminum, 2 – 25 VDC

Overview

The KEMET Aluminum Organic Capacitor (AO-CAP) is a solid state aluminum capacitor. The cathode is a conductive organic polymer, which results in very low ESR and improved capacitance retention at high frequency. AO-CAPs may be operated at steady state voltages up to 100% of rated voltage without the need to de-rate.

Since there is no liquid electrolyte, the A700 offers long operational lifetimes, low ESR, and high operational temperatures. The inherent low ESR renders the A700 suitable for high ripple current handling. The small package size, high ripple current capability, high operating temperature, low parasistics, and high capacitance makes the A700 ideal for high performance microprocessor, FPGA, and ASIC decoupling designs.

Benefits

- ESR: 4.5 – 70 mΩ
- Polymer cathode technology
- High frequency capacitance retention
- Non-ignition failure mode
- 100% accelerated steady state aging
- 100% surge current tested
- Volumetric efficiency
- Self-healing mechanism
- EIA standard case sizes

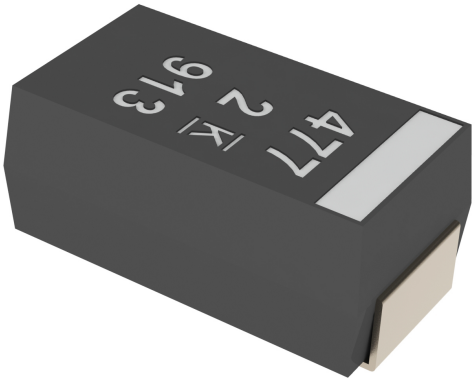

Click image above for interactive 3D content

Open PDF in Adobe Reader for full functionality

Applications

Typical applications include DC/DC converters, notebook PCs, telecommunications, displays, and industrial applications.

Environmental Compliance

RoHS compliant (6/6) according to Directive 2002/95/EC when ordered with 100% Sn solder.

© KEMET Electronics Corporation • KEMET Tower • One East Broward Boulevard
Fort Lauderdale, FL 33301 USA • 954-766-2800 • www.kemet.com

K-SIM

For a detailed analysis of specific part numbers, please visit ksim.kemet.com to access KEMET's K-SIM software. KEMET K-SIM is designed to simulate behavior of components with respect to frequency, ambient temperature, and DC bias levels.

Ordering Information

A	700	V	476	M	006	A	T	E018	
Capacitor Class	Series	Case Size	Capacitance Code (pF)	Capacitance Tolerance	Rated Voltage (VDC)	Failure Rate/ Design	Termination Finish	ESR Code	Packaging (C-Spec)
A = Aluminum	700 = Aluminum Polymer	D V W X	First two digits represent significant figures. Third digit specifies number of zeros.	M = ±20%	002 = 2 2R5 = 2.5 004 = 4 006 = 6.3 008 = 8 010 = 10 12R = 12.5 016 = 16 025 = 25	A = N/A	T = 100% Matte Tin (Sn)-plated	E = ESR Last three digits specify ESR in mΩ (018 = 18 mΩ)	Blank = 7" Reel 7280 = 13" Reel

Performance Characteristics

Item	Performance Characteristics
Operating Temperature	−55°C to 105°C/125°C (Refer to part number for maximum temperature rating)
Rated Capacitance Range	6.8 – 560 µF at 120 Hz/25°C
Capacitance Tolerance	M Tolerance (20%)
Rated Voltage Range	2 – 25 V
DF (120 Hz)	6%
ESR (100 kHz)	Refer to Part Number Electrical Specification Table
Leakage Current	≤ 4 V Rating: ≤ 0.06 CV (µA) at rated voltage after 5 minutes > 4 V Rating: ≤ 0.04 CV (µA) at rated voltage after 5 minutes If there is any concern about leakage current, please perform pre-conditioning to the part following below conditions: * Temperature: 105°C maximum * Voltage: Rated Voltage * Series Resistor: 1,000 Ω * Charge Time: 1 hour minimum * Measuring: Discharge the capacitor(s), store them for 4 to 24 hours at room temperature and RH ≤ 60%

Qualification

Test	Condition	Characteristics				
Endurance	105°C/125°C*2 at rated voltage, 2,000 hours*3	Δ C/C	Within ±10%*4 of initial value			
		DF	≤ initial limit			
		DCL	Within 1.25 x initial limit			
		ESR	Within 2.0 x initial limit			
Storage Life	105°C/125°C*2 at 0 volts, 2,000 hours*3	Δ C/C	Within ±10%*4 of initial value			
		DF	Within initial limits			
		DCL	Within 1.25 x initial limit			
		ESR	Within 2.0 x initial limit			
Humidity	60°C, 90% RH, 1,000 hours, rated voltage 60°C, 90% RH, 500 hours, no Load	Δ C/C	Within −5/+30%*5 of initial value A700V477M002AT PN: −30%/+70% of initial value			
		DF	≤ initial limit			
		DCL	Within 5.0 x initial limit			
Temperature Stability	Extreme temperature exposure at a succession of continuous steps at +25°C, −55°C, +85°C, +105°C/+125°C*2		+25°C	−55°C	+85°C	+105°C/125°C
		Δ C/C	IL*1	±15%	±15%	±20%
		DF	IL	IL	1.2 x IL	1.5 x IL
		DCL	IL	N/A	10 x IL	10 x IL
Surge Voltage	105°C / 125°C*2, 1.32 x rated voltage, 33 Ω resistance, 1,000 cycles	Δ C/C	Within ±10%*4 of initial value			
		DF	Within initial limits			
		DCL	Within initial limits			
		ESR	Within initial limits			
Mechanical Shock/ Vibration	MIL–STD–202, Method 213, Condition I, 100 G peak MIL–STD–202, Method 204, Condition D, 10 Hz to 2,000 Hz, 20 G peak	Δ C/C	Within ±10% of initial value			
		DF	Within initial limits			
		DCL	Within initial limits			

**1 IL = Initial Limit*
**2 Refer to part number specifications for individual temperature classification*
**3 PN A700V337M002AT test condition specification goes up to 1,000 hours*
**4 For PN's : A700V337M002AT & A700V477M002AT capacitance change is within ± 20 of intial value*
**5 For PN's : A700V337M002AT & A700V477M002AT capacitance change is within −30/+70% of intial value*

Electrical Characteristics

ESR vs. Frequency

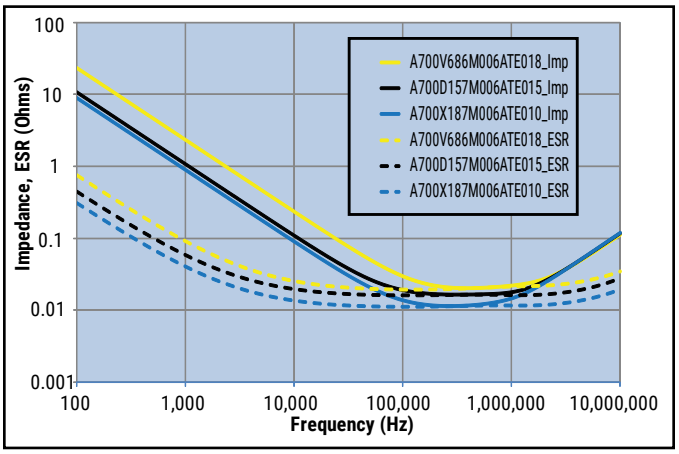

Capacitance vs. Frequency

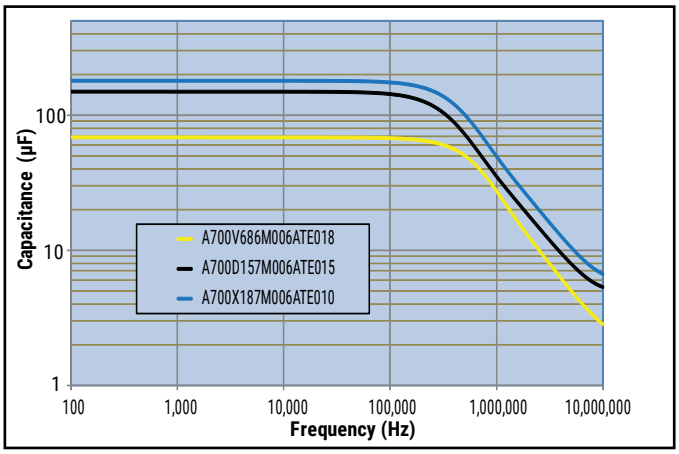

Dimensions – Millimeters (Inches)

Metric will govern

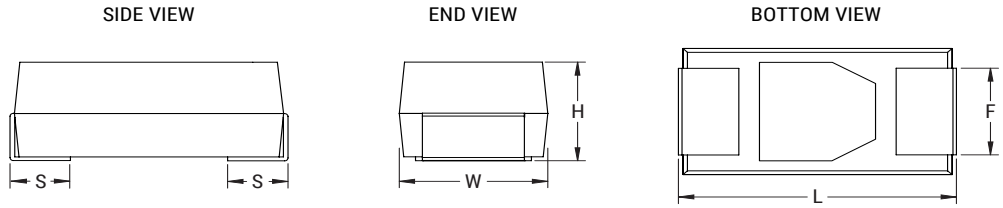

Case Size		Component					Typical Weight
KEMET	EIA	L	W	H	F ±0.1 ±(0.004)	S ±0.3 ±(0.012)	(mg)
D	7343–31	7.3±0.3 (0.287±0.012)	4.3±0.3 (0.169±0.012)	2.8±0.3 (0.098±0.012)	2.4 (0.094)	1.3 (0.051)	196.58
V	7343–20	7.3±0.3 (0.287±0.012)	4.3±0.3 (0.169±0.012)	2.0 (0.079) Maximum*	2.4 (0.094)	1.3 (0.051)	132.72
W	7343–15	7.3±0.3 (0.287±0.012)	4.3±0.3 (0.169±0.012)	1.4±0.1 (0.055±0.004)	2.4 (0.094)	1.3 (0.051)	305.03
X	7343–43	7.3±0.3 (0.287±0.012)	4.3±0.3 (0.169±0.012)	4.0±0.3 (0.157±0.012)	2.4 (0.094)	1.3 (0.051)	305.03

Notes: (Ref) – Dimensions provided for reference only.
** Maximum Height is 2.1 for A700V477M002AT/A700V337M2R5AT*

Table 1 – Ratings & Part Number Reference

Rated Voltage	Rated Capacitance	Case Code/ Case Size	KEMET Part Number	DC Leakage	DF	ESR	Ripple Current (rms)	MSL	Maximum Operating Temp.
VDC at 105°C	µF	KEMET/EIA	(See below for part options)	µA at +25°C Maximum/ 5 Minutes	% at +25°C 120 Hz Maximum	mΩ at 25°C 100 kHz Maximum	mA at 100 kHz with/T = +20°C at −55°C to 125°C	Reflow Temp ≤ 260°C	°C
2	100	V/7343-20	A700V107M002ATE016	12	6	16	4,100	3	125
2	100	V/7343-20	A700V107M002ATE018	12	6	18	3,900	3	125
2	100	V/7343-20	A700V107M002ATE025	12	6	25	3,300	3	125
2	100	V/7343-20	A700V107M002ATE028	12	6	28	3,100	3	125
2	150	V/7343-20	A700V157M002ATE015	18	6	15	4,200	3	125
2	150	V/7343-20	A700V157M002ATE018	18	6	18	3,900	3	125
2	150	V/7343-20	A700V157M002ATE025	18	6	25	3,300	3	125
2	150	V/7343-20	A700V157M002ATE028	18	6	28	3,100	3	125
2	180	D/7343-31	A700D187M002ATE015	22	6	15	4,100	3	125
2	180	D/7343-31	A700D187M002ATE018	22	6	18	3,700	3	125
2	220	W/7343-15	A700W227M002ATE006	26	6	6	6,900	3	125
2	220	W/7343-15	A700W227M002ATE009	26	6	9	5,700	3	125
2	220	V/7343-20	A700V227M002ATE009	26	6	9	5,500	3	125
2	220	V/7343-20	A700V227M002ATE015	26	6	15	4,200	3	125
2	220	V/7343-20	A700V227M002ATE018	26	6	18	3,900	3	125
2	220	D/7343-31	A700D227M002ATE009	26	6	9	5,300	3	125
2	220	D/7343-31	A700D227M002ATE012	26	6	12	4,600	3	125
2	220	D/7343-31	A700D227M002ATE015	26	6	15	4,100	3	125
2	220	D/7343-31	A700D227M002ATE018	26	6	18	3,700	3	125
2	270	X/7343-43	A700X277M002ATE010	32	6	10	4,700	3	125
2	270	X/7343-43	A700X277M002ATE012	32	6	12	4,300	3	125
2	270	X/7343-43	A700X277M002ATE015	32	6	15	3,900	3	125
2	330	V/7343-20	A700V337M002ATE4R5	40	6	4.5	7,750	3	125
2	330	V/7343-20	A700V337M002ATE006	40	6	6	6,700	3	125
2	330	V/7343-20	A700V337M002ATE009	40	6	9	5,500	3	125
2	330	D/7343-31	A700D337M002ATE007	40	6	7	6,000	3	125
2	330	D/7343-31	A700D337M002ATE009	40	6	9	5,300	3	125
2	330	D/7343-31	A700D337M002ATE012	40	6	12	4,600	3	125
2	330	X/7343-43	A700X337M002ATE010	40	6	10	4,700	3	125
2	330	X/7343-43	A700X337M002ATE015	40	6	15	3,900	3	125
2	390	X/7343-43	A700X397M002ATE010	47	6	10	4,700	3	125
2	390	X/7343-43	A700X397M002ATE015	47	6	15	3,900	3	125
2	470	V/7343-21	A700V477M002ATE4R5	56	6	4.5	7,750	3	105
2	470	V/7343-21	A700V477M002ATE006	56	6	6	6,700	3	105
2	470	D/7343-31	A700D477M002ATE005	56	6	5	7,100	3	125
2	470	D/7343-31	A700D477M002ATE006	56	6	6	6,500	3	125
2	470	X/7343-43	A700X477M002ATE005	56	6	5	6,700	3	125
2	470	X/7343-43	A700X477M002ATE007	56	6	7	5,700	3	125
2	470	X/7343-43	A700X477M002ATE010	56	6	10	4,700	3	125
2	470	X/7343-43	A700X477M002ATE015	56	6	15	3,900	3	125
2	560	X/7343-43	A700X567M002ATE4R5	67	6	4.5	7,000	3	125
2	560	X/7343-43	A700X567M002ATE005	67	6	5	6,700	3	125
2	560	X/7343-43	A700X567M002ATE006	67	6	6	6,100	3	125
2	560	X/7343-43	A700X567M002ATE009	67	6	9	5,000	3	125
2.5	68	V/7343-20	A700V686M2R5ATE020	10	6	20	3,700	3	125
VDC at 105°C	µF	KEMET/EIA	(See below for part options)	µA at +25°C Maximum/ 5 Minutes	% at +25°C 120 Hz Maximum	mΩ at 25°C 100 kHz Maximum	mA at 100 kHz with/T = +20°C at −55°C to 125°C	Reflow Temp ≤ 260°C	°C
Rated Voltage	Rated Capacitance	Case Code/ Case Size	KEMET Part Number	DC Leakage	DF	ESR	Ripple Current	MSL	Maximum Operating Temp.

Also available on large (13 inch) reels. Add 7280 to the end of the part number.
Higher voltage ratings and tighter tolerance product including ESR may be substituted within the same size at KEMET's option. Voltage substitutions will be marked with the higher voltage rating. Substitutions can include better than series.

Table 1 – Ratings & Part Number Reference cont.

Rated Voltage	Rated Capacitance	Case Code/ Case Size	KEMET Part Number	DC Leakage	DF	ESR	Ripple Current (rms)	MSL	Maximum Operating Temp.
VDC at 105°C	µF	KEMET/EIA	(See below for part options)	µA at +25°C Maximum/ 5 Minutes	% at +25°C 120 Hz Maximum	mΩ at 25°C 100 kHz Maximum	mA at 100 kHz with/T = +20°C at −55°C to 125°C	Reflow Temp ≤ 260°C	°C
2.5	68	V/7343-20	A700V686M2R5ATE028	10	6	28	3,100	3	125
2.5	82	V/7343-20	A700V826M2R5ATE018	12	6	18	3,900	3	125
2.5	82	V/7343-20	A700V826M2R5ATE025	12	6	25	3,300	3	125
2.5	82	V/7343-20	A700V826M2R5ATE028	12	6	28	3,100	3	125
2.5	100	D/7343-31	A700D107M2R5ATE018	15	6	18	3,700	3	125
2.5	100	D/7343-31	A700D107M2R5ATE025	15	6	25	3,200	3	125
2.5	100	D/7343-31	A700D107M2R5ATE028	15	6	28	3,000	3	125
2.5	120	D/7343-31	A700D127M2R5ATE015	18	6	15	4,100	3	125
2.5	120	D/7343-31	A700D127M2R5ATE018	18	6	18	3,700	3	125
2.5	150	D/7343-31	A700D157M2R5ATE015	23	6	15	4,100	3	125
2.5	150	D/7343-31	A700D157M2R5ATE018	23	6	18	3,700	3	125
2.5	180	D/7343-31	A700D187M2R5ATE015	27	6	15	4,100	3	125
2.5	180	D/7343-31	A700D187M2R5ATE018	27	6	18	3,700	3	125
2.5	180	X/7343-43	A700X187M2R5ATE010	27	6	10	4,700	3	125
2.5	180	X/7343-43	A700X187M2R5ATE015	27	6	15	3,900	3	125
2.5	180	X/7343-43	A700X187M2R5ATE018	27	6	18	3,500	3	125
2.5	220	W/7343-15	A700W227M2R5ATE006	33	6	6	6,900	3	125
2.5	220	W/7343-15	A700W227M2R5ATE009	33	6	9	5,700	3	125
2.5	220	X/7343-43	A700X227M2R5ATE009	33	6	9	5,000	3	125
2.5	220	X/7343-43	A700X227M2R5ATE010	33	6	10	4,700	3	125
2.5	220	X/7343-43	A700X227M2R5ATE015	33	6	15	3,900	3	125
2.5	330	V/7343-20	A700V337M2R5ATE4R5	50	6	4.5	7,750	3	125
2.5	330	V/7343-20	A700V337M2R5ATE006	50	6	6	6,700	3	125
2.5	330	V/7343-20	A700V337M2R5ATE009	50	6	9	5,500	3	125
2.5	330	X/7343-43	A700X337M2R5ATE010	50	6	10	4,700	3	125
2.5	330	X/7343-43	A700X337M2R5ATE015	50	6	15	3,900	3	125
2.5	470	X/7343-43	A700X477M2R5ATE005	70	6	5	6,700	3	125
2.5	470	X/7343-43	A700X477M2R5ATE007	70	6	7	5,700	3	125
2.5	470	X/7343-43	A700X477M2R5ATE010	70	6	10	4,700	3	125
2.5	470	X/7343-43	A700X477M2R5ATE015	70	6	15	3,900	3	125
2.5	560	X/7343-43	A700X567M2R5ATE4R5	84	6	4.5	7,000	3	125
2.5	560	X/7343-43	A700X567M2R5ATE006	84	6	6	6,100	3	125
2.5	560	X/7343-43	A700X567M2R5ATE009	84	6	9	5,000	3	125
4	68	V/7343-20	A700V686M004ATE020	16	6	20	3,700	3	125
4	68	V/7343-20	A700V686M004ATE028	16	6	28	3,100	3	125
4	82	V/7343-20	A700V826M004ATE016	20	6	16	4,100	3	125
4	82	V/7343-20	A700V826M004ATE018	20	6	18	3,900	3	125
4	82	V/7343-20	A700V826M004ATE025	20	6	25	3,300	3	125
4	82	V/7343-20	A700V826M004ATE028	20	6	28	3,100	3	125
4	100	D/7343-31	A700D107M004ATE018	24	6	18	3,700	3	125
4	100	D/7343-31	A700D107M004ATE025	24	6	25	3,200	3	125
4	100	D/7343-31	A700D107M004ATE028	24	6	28	3,000	3	125
4	100	V/7343-20	A700V107M004ATE025	24	6	25	3,300	3	125
4	100	V/7343-20	A700V107M004ATE028	24	6	28	3,100	3	125
4	120	D/7343-31	A700D127M004ATE015	29	6	15	4,100	3	125
VDC at 105°C	µF	KEMET/EIA	(See below for part options)	µA at +25°C Maximum/ 5 Minutes	% at +25°C 120 Hz Maximum	mΩ at 25°C 100 kHz Maximum	mA at 100 kHz with/T = +20°C at −55°C to 125°C	Reflow Temp ≤ 260°C	°C
Rated Voltage	Rated Capacitance	Case Code/ Case Size	KEMET Part Number	DC Leakage	DF	ESR	Ripple Current	MSL	Maximum Operating Temp.

Also available on large (13 inch) reels. Add 7280 to the end of the part number.
Higher voltage ratings and tighter tolerance product including ESR may be substituted within the same size at KEMET's option. Voltage substitutions will be marked with the higher voltage rating. Substitutions can include better than series.

Table 1 – Ratings & Part Number Reference cont.

Rated Voltage	Rated Capacitance	Case Code/ Case Size	KEMET Part Number	DC Leakage	DF	ESR	Ripple Current (rms)	MSL	Maximum Operating Temp.
VDC at 105°C	µF	KEMET/EIA	(See below for part options)	µA at +25°C Maximum/ 5 Minutes	% at +25°C 120 Hz Maximum	mΩ at 25°C 100 kHz Maximum	mA at 100 kHz with/T = +20°C at −55°C to 125°C	Reflow Temp ≤ 260°C	°C
4	120	D/7343-31	A700D127M004ATE018	29	6	18	3,700	3	125
4	150	D/7343-31	A700D157M004ATE015	36	6	15	4,100	3	125
4	150	D/7343-31	A700D157M004ATE018	36	6	18	3,700	3	125
4	150	V/7343-20	A700V157M004ATE015	36	6	15	4,200	3	125
4	150	V/7343-20	A700V157M004ATE016	36	6	16	4,100	3	125
4	150	V/7343-20	A700V157M004ATE018	36	6	18	3,900	3	125
4	180	D/7343-31	A700D187M004ATE012	43	6	12	4,600	3	125
4	180	D/7343-31	A700D187M004ATE015	43	6	15	4,100	3	125
4	180	D/7343-31	A700D187M004ATE018	43	6	18	3,700	3	125
4	180	X/7343-43	A700X187M004ATE010	43	6	10	4,700	3	125
4	180	X/7343-43	A700X187M004ATE015	43	6	15	3,900	3	125
4	180	X/7343-43	A700X187M004ATE018	43	6	18	3,500	3	125
4	220	D/7343-31	A700D227M004ATE009	53	6	9	5,300	3	125
4	220	D/7343-31	A700D227M004ATE010	53	6	10	5,000	3	125
4	220	D/7343-31	A700D227M004ATE015	53	6	15	4,100	3	125
4	220	X/7343-43	A700X227M004ATE009	53	6	9	5,000	3	125
4	220	X/7343-43	A700X227M004ATE010	53	6	10	4,700	3	125
4	220	X/7343-43	A700X227M004ATE015	53	6	15	3,900	3	125
4	270	X/7343-43	A700X277M004ATE010	65	6	10	4,700	3	125
4	270	X/7343-43	A700X277M004ATE015	65	6	15	3,900	3	125
4	330	X/7343-43	A700X337M004ATE008	79	6	8	5,300	3	125
4	330	X/7343-43	A700X337M004ATE010	79	6	10	4,700	3	125
4	330	X/7343-43	A700X337M004ATE015	79	6	15	3,900	3	125
6.3	10	V/7343-20	A700V106M006ATE055	3	6	55	2,200	3	125
6.3	22	V/7343-20	A700V226M006ATE028	6	6	28	3,100	3	125
6.3	22	V/7343-20	A700V226M006ATE045	6	6	45	2,400	3	125
6.3	33	V/7343-20	A700V336M006ATE018	8	6	18	3,900	3	125
6.3	33	V/7343-20	A700V336M006ATE025	8	6	25	3,300	3	125
6.3	33	V/7343-20	A700V336M006ATE028	8	6	28	3,100	3	125
6.3	47	V/7343-20	A700V476M006ATE018	12	6	18	3,900	3	125
6.3	47	V/7343-20	A700V476M006ATE025	12	6	25	3,300	3	125
6.3	47	V/7343-20	A700V476M006ATE028	12	6	28	3,100	3	125
6.3	56	V/7343-20	A700V566M006ATE018	14	6	18	3,900	3	125
6.3	56	V/7343-20	A700V566M006ATE025	14	6	25	3,300	3	125
6.3	56	V/7343-20	A700V566M006ATE028	14	6	28	3,100	3	125
6.3	68	V/7343-20	A700V686M006ATE015	17	6	15	4,200	3	125
6.3	68	V/7343-20	A700V686M006ATE018	17	6	18	3,900	3	125
6.3	68	V/7343-20	A700V686M006ATE025	17	6	25	3,300	3	125
6.3	68	V/7343-20	A700V686M006ATE028	17	6	28	3,100	3	125
6.3	82	V/7343-20	A700V826M006ATE018	21	6	18	3,900	3	125
6.3	82	V/7343-20	A700V826M006ATE025	21	6	25	3,300	3	125
6.3	82	V/7343-20	A700V826M006ATE028	21	6	28	3,100	3	125
6.3	100	V/7343-20	A700V107M006ATE015	25	6	15	4,200	3	125
6.3	100	V/7343-20	A700V107M006ATE018	25	6	18	3,900	3	125
6.3	100	V/7343-20	A700V107M006ATE025	25	6	25	3,300	3	125
VDC at 105°C	µF	KEMET/EIA	(See below for part options)	µA at +25°C Maximum/ 5 Minutes	% at +25°C 120 Hz Maximum	mΩ at 25°C 100 kHz Maximum	mA at 100 kHz with/T = +20°C at −55°C to 125°C	Reflow Temp ≤ 260°C	°C
Rated Voltage	Rated Capacitance	Case Code/ Case Size	KEMET Part Number	DC Leakage	DF	ESR	Ripple Current	MSL	Maximum Operating Temp.

Also available on large (13 inch) reels. Add 7280 to the end of the part number.
Higher voltage ratings and tighter tolerance product including ESR may be substituted within the same size at KEMET's option. Voltage substitutions will be marked with the higher voltage rating. Substitutions can include better than series.

Table 1 – Ratings & Part Number Reference cont.

Rated Voltage	Rated Capacitance	Case Code/ Case Size	KEMET Part Number	DC Leakage	DF	ESR	Ripple Current (rms)	MSL	Maximum Operating Temp.
VDC at 105°C	µF	KEMET/EIA	(See below for part options)	µA at +25°C Maximum/ 5 Minutes	% at +25°C 120 Hz Maximum	mΩ at 25°C 100 kHz Maximum	mA at 100 kHz with/T = +20°C at −55°C to 125°C	Reflow Temp ≤ 260°C	°C
6.3	100	D/7343-31	A700D107M006ATE015	25	6	15	4,100	3	125
6.3	100	D/7343-31	A700D107M006ATE018	25	6	18	3,700	3	125
6.3	120	D/7343-31	A700D127M006ATE012	30	6	12	4,600	3	125
6.3	120	D/7343-31	A700D127M006ATE015	30	6	15	4,100	3	125
6.3	120	D/7343-31	A700D127M006ATE018	30	6	18	3,700	3	125
6.3	150	D/7343-31	A700D157M006ATE010	38	6	10	5,000	3	125
6.3	150	D/7343-31	A700D157M006ATE012	38	6	12	4,600	3	125
6.3	150	D/7343-31	A700D157M006ATE015	38	6	15	4,100	3	125
6.3	150	X/7343-43	A700X157M006ATE010	38	6	10	4,700	3	125
6.3	150	X/7343-43	A700X157M006ATE012	38	6	12	4,300	3	125
6.3	150	X/7343-43	A700X157M006ATE015	38	6	15	3,900	3	125
6.3	180	D/7343-31	A700D187M006ATE010	45	6	10	5,000	3	125
6.3	180	D/7343-31	A700D187M006ATE015	45	6	15	4,100	3	125
6.3	180	X/7343-43	A700X187M006ATE010	45	6	10	4,700	3	125
6.3	180	X/7343-43	A700X187M006ATE015	45	6	15	3,900	3	125
6.3	220	X/7343-43	A700X227M006ATE007	55	6	7	5,700	3	125
6.3	220	X/7343-43	A700X227M006ATE010	55	6	10	4,700	3	125
6.3	220	X/7343-43	A700X227M006ATE015	55	6	15	3,900	3	125
8	10	V/7343-20	A700V106M008ATE055	3	6	55	2,200	3	125
8	22	V/7343-20	A700V226M008ATE028	7	6	28	3,100	3	125
8	22	V/7343-20	A700V226M008ATE045	7	6	45	2,400	3	125
8	33	V/7343-20	A700V336M008ATE018	11	6	18	3,900	3	125
8	33	V/7343-20	A700V336M008ATE025	11	6	25	3,300	3	125
8	33	V/7343-20	A700V336M008ATE028	11	6	28	3,100	3	125
8	56	D/7343-31	A700D566M008ATE015	18	6	15	4,100	3	125
8	56	D/7343-31	A700D566M008ATE018	18	6	18	3,700	3	125
8	68	D/7343-31	A700D686M008ATE015	22	6	15	4,100	3	125
8	68	D/7343-31	A700D686M008ATE018	22	6	18	3,700	3	125
8	100	X/7343-43	A700X107M008ATE010	32	6	10	4,700	3	125
8	100	X/7343-43	A700X107M008ATE012	32	6	12	4,300	3	125
8	100	X/7343-43	A700X107M008ATE015	32	6	15	3,900	3	125
10	10	V/7343-20	A700V106M010ATE055	4	6	55	2,200	3	125
10	22	V/7343-20	A700V226M010ATE028	9	6	28	3,100	3	125
10	22	V/7343-20	A700V226M010ATE045	9	6	45	2,400	3	125
10	33	V/7343-20	A700V336M010ATE018	13	6	18	3,900	3	125
10	33	V/7343-20	A700V336M010ATE025	13	6	25	3,300	3	125
10	33	V/7343-20	A700V336M010ATE028	13	6	28	3,100	3	125
10	47	V/7343-20	A700V476M010ATE025	19	6	25	3,300	3	125
10	47	V/7343-20	A700V476M010ATE028	19	6	28	3,100	3	125
10	56	D/7343-31	A700D566M010ATE015	22	6	15	4,100	3	125
10	56	D/7343-31	A700D566M010ATE018	22	6	18	3,700	3	125
10	68	D/7343-31	A700D686M010ATE015	27	6	15	4,100	3	125
10	68	D/7343-31	A700D686M010ATE018	27	6	18	3,700	3	125
10	100	X/7343-43	A700X107M010ATE010	40	6	10	4,700	3	125
10	100	X/7343-43	A700X107M010ATE015	40	6	15	3,900	3	125
VDC at 105°C	µF	KEMET/EIA	(See below for part options)	µA at +25°C Maximum/ 5 Minutes	% at +25°C 120 Hz Maximum	mΩ at 25°C 100 kHz Maximum	mA at 100 kHz with/T = +20°C at −55°C to 125°C	Reflow Temp ≤ 260°C	°C
Rated Voltage	Rated Capacitance	Case Code/ Case Size	KEMET Part Number	DC Leakage	DF	ESR	Ripple Current	MSL	Maximum Operating Temp.

Also available on large (13 inch) reels. Add 7280 to the end of the part number.
Higher voltage ratings and tighter tolerance product including ESR may be substituted within the same size at KEMET's option. Voltage substitutions will be marked with the higher voltage rating. Substitutions can include better than series.

Table 1 – Ratings & Part Number Reference cont.

Rated Voltage	Rated Capacitance	Case Code/ Case Size	KEMET Part Number	DC Leakage	DF	ESR	Ripple Current (rms)	MSL	Maximum Operating Temp.
VDC at 105°C	µF	KEMET/EIA	(See below for part options)	µA at +25°C Maximum/ 5 Minutes	% at +25°C 120 Hz Maximum	mΩ at 25°C 100 kHz Maximum	mA at 100 kHz with/T = +20°C at −55°C to 125°C	Reflow Temp ≤ 260°C	°C
10	120	X/7343-43	A700X127M010ATE010	48	6	10	4,700	3	125
10	120	X/7343-43	A700X127M010ATE015	48	6	15	3,900	3	125
10	150	X/7343-43	A700X157M010ATE010	60	6	10	4,700	3	125
10	150	X/7343-43	A700X157M010ATE015	60	6	15	3,900	3	125
12.5	10	V/7343-20	A700V106M12RATE040	5	6	40	2,600	3	125
12.5	10	V/7343-20	A700V106M12RATE055	5	6	55	2,200	3	125
12.5	10	V/7343-20	A700V106M12RATE060	5	6	60	2,100	3	125
12.5	15	V/7343-20	A700V156M12RATE040	8	6	40	2,600	3	125
12.5	15	V/7343-20	A700V156M12RATE045	8	6	45	2,400	3	125
12.5	22	V/7343-20	A700V226M12RATE030	11	6	30	3,000	3	125
12.5	33	V/7343-20	A700V336M12RATE025	17	6	25	3,300	3	125
12.5	56	D/7343-31	A700D566M12RATE020	28	6	20	3,500	3	125
12.5	47	D/7343-31	A700D476M12RATE020	24	6	20	3,500	3	125
12.5	47	D/7343-31	A700D476M12RATE025	24	6	25	3,200	3	125
12.5	100	X/7343-43	A700X107M12RATE012	50	6	12	4,300	3	125
12.5	100	X/7343-43	A700X107M12RATE015	50	6	15	3,900	3	125
16	6.8	V/7343-20	A700V685M016ATE070	4	6	70	2,000	3	125
16	8.2	V/7343-20	A700V825M016ATE045	5	6	45	2,400	3	125
16	10	V/7343-20	A700V106M016ATE045	6	6	45	2,400	3	125
16	10	V/7343-20	A700V106M016ATE060	6	6	60	2,100	3	125
16	15	V/7343-20	A700V156M016ATE040	10	6	40	2,600	3	125
16	22	D/7343-31	A700D226M016ATE018	14	6	18	3,700	3	125
16	22	D/7343-31	A700D226M016ATE025	14	6	25	3,200	3	125
16	22	D/7343-31	A700D226M016ATE030	14	6	30	2,900	3	125
25	15	V/7343-20	A700V156M025ATE040	15	6	40	2,600	3	125
VDC at 105°C	µF	KEMET/EIA	(See below for part options)	µA at +25°C Maximum/ 5 Minutes	% at +25°C 120 Hz Maximum	mΩ at 25°C 100 kHz Maximum	mA at 100 kHz with/T = +20°C at −55°C to 125°C	Reflow Temp ≤ 260°C	°C
Rated Voltage	Rated Capacitance	Case Code/ Case Size	KEMET Part Number	DC Leakage	DF	ESR	Ripple Current	MSL	Maximum Operating Temp.

Also available on large (13 inch) reels. Add 7280 to the end of the part number.
Higher voltage ratings and tighter tolerance product including ESR may be substituted within the same size at KEMET's option. Voltage substitutions will be marked with the higher voltage rating. Substitutions can include better than series.

Derating Guidelines

Voltage Rating	Maximum Recommended Steady State Voltage	Maximum Recommended Transient Voltage (1 ms – 1 µs)
	−55°C to 125°C	
2 – 25 V	V_R	V_R

V_R = Rated Voltage

Ripple Current/Ripple Voltage

Permissible AC ripple voltage and current are related to equivalent series resistance (ESR) and the power dissipation capabilities of the device. Permissible AC ripple voltage which may be applied is limited by two criteria

1. The positive peak AC voltage plus the DC bias voltage, if any, must not exceed the DC voltage rating of the capacitor.
2. The negative peak AC voltage, in combination with bias voltage, if any, must not exceed the allowable limits specified for reverse voltage. See the Reverse Voltage section for allowable limits

Power capability is determined based on a 20°C temperature rise. A higher temperature rise and therefore higher power capability is allowable as long as the ambient temperature plus temperature rise due to ripple current does not exceed the rated temperature of the part.
The maximum power dissipation by case size can be determined using the below table.

KEMET Series and Case Code	EIA Case Code	Maximum Power Dissipation (Pmax) mWatts at 25°C with +20°C Rise
A700W	7343-15	290
A700V	7343-20	270
A700D	7343-31	250
A700X	7343-43	225

Using the Pmax of the device, the maximum allowable rms ripple current or voltage may be determined.

$I(max) = \sqrt{Pmax/R}$
$E(max) = Z\sqrt{Pmax/R}$

I = rms ripple current (amperes)
E = rms ripple voltage (volts)
Pmax = maximum power dissipation(watts)
R = ESR at specified frequency (ohms)
Z = Impedance at specified frequency (Ohms)

Refer to part number listings for permittable Arms limits.

Reverse Voltage

Polymer aluminum capacitors are polar devices and may be permanently damaged or destroyed if connected in the wrong polarity. These devices will withstand a certain degree of transient voltage reversal for short periods as shown in the below table. Please note that these parts may not be operated continuously in reverse, even within these limits.

Temperature	Permissible Transient Reverse Voltage
25°C	60% of Rated Voltage
55°C	50% of Rated Voltage
85°C	40% of Rated Voltage
125°C	30% of Rated Voltage

Table 2 – Land Dimensions/Courtyard

KEMET	Metric Size Code	Density Level A: Maximum (Most) Land Protrusion (mm)					Density Level B: Median (Nominal) Land Protrusion (mm)					Density Level C: Minimum (Least) Land Protrusion (mm)				
Case	EIA	W	L	S	V1	V2	W	L	S	V1	V2	W	L	S	V1	V2
D	7343–31	2.55	2.77	3.67	10.22	5.60	2.43	2.37	3.87	9.12	5.10	2.33	1.99	4.03	8.26	4.84
V	7343–20	2.55	2.77	3.67	10.22	5.60	2.43	2.37	3.87	9.12	5.10	2.33	1.99	4.03	8.26	4.84
W	7343–15	2.55	2.77	3.67	10.22	5.60	2.43	2.37	3.87	9.12	5.10	2.33	1.99	4.03	8.26	4.84
X[1]	7343–43	2.55	2.77	3.67	10.22	5.60	2.43	2.37	3.87	9.12	5.10	2.33	1.99	4.03	8.26	4.84

Density Level A: *For low-density product applications. Recommended for wave solder applications and provides a wider process window for reflow solder processes.*
Density Level B: *For products with a moderate level of component density. Provides a robust solder attachment condition for reflow solder processes.*
Density Level C: *For high component density product applications. Before adapting the minimum land pattern variations the user should perform qualification testing based on the conditions outlined in IPC standard 7351 (IPC–7351).*
[1] *Height of these chips may create problems in wave soldering.*
[2] *Land pattern geometry is too small for silkscreen outline.*

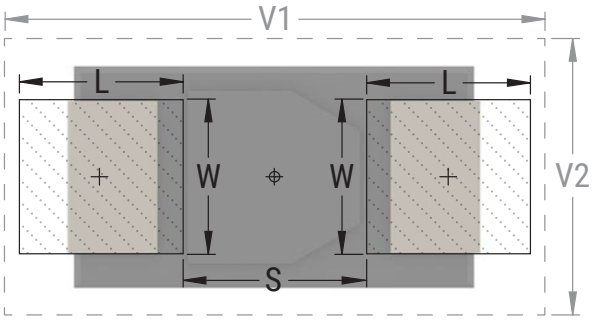

Grid Placement Courtyard

Soldering Process

KEMET's families of surface mount capacitors are compatible with wave (single or dual), convection, IR, or vapor phase reflow techniques. Preheating of these components is recommended to avoid extreme thermal stress. KEMET's recommended profile conditions for convection and IR reflow reflect the profile conditions of the IPC/J–STD–020D standard for moisture sensitivity testing. The devices can safely withstand a maximum of three reflow passes at these conditions.

Please note that although the X/7343–43 case size can withstand wave soldering, the tall profile (4.3 mm maximum) dictates care in wave process development.

Hand soldering should be performed with care due to the difficulty in process control. If performed, care should be taken to avoid contact of the soldering iron to the molded case. The iron should be used to heat the solder pad, applying solder between the pad and the termination, until reflow occurs. Once reflow occurs, the iron should be removed immediately. "Wiping" the edges of a chip and heating the top surface is not recommended.

Profile Feature	SnPb Assembly	Pb-Free Assembly
Preheat/Soak		
Temperature Minimum (T_{smin})	100°C	150°C
Temperature Maximum (T_{smax})	150°C	200°C
Time (t_s) from T_{smin} to T_{smax})	60 – 120 seconds	60 – 120 seconds
Ramp-up Rate (T_L to T_P)	3°C/seconds maximum	3°C/seconds maximum
Liquidous Temperature (T_L)	183°C	217°C
Time Above Liquidous (t_L)	60 – 150 seconds	60 – 150 seconds
Peak Temperature (T_P)	220°C* 235°C**	250°C* 260°C**
Time within 5°C of Maximum Peak Temperature (t_p)	20 seconds maximum	30 seconds maximum
Ramp-down Rate (T_P to T_L)	6°C/seconds maximum	6°C/seconds maximum
Time 25°C to Peak Temperature	6 minutes maximum	8 minutes maximum

Note: All temperatures refer to the center of the package, measured on the package body surface that is facing up during assembly reflow.
** For Case Size height > 2.5 mm*
*** For Case Size height ≤ 2.5 mm*

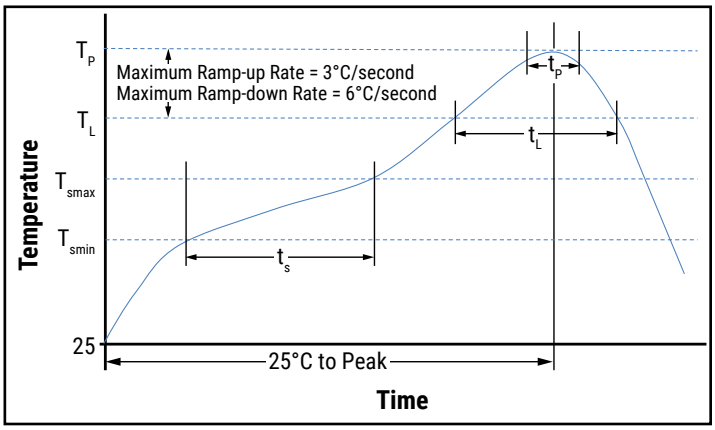

Storage

All AO-CAP Series are shipped in moisture barrier bags (MBBs) with desiccant and humidity indicator card (HIC). These parts are classified as MSL3 (Moisture Sensitivity Level 3) per IPC/JEDEC J–STD–020 and packaged per IPC/JEDEC J–STD–033. MSL3 specifies a floor time of 168H at 30°C maximum temperature and 60% relative humidity. Unused capacitors should be sealed in a MBB with fresh desiccant.

The calculated shelf life in a sealed bag would be 12 months from a bag seal date in a storage environment of < 40°C and humidity < 90% RH. It should be 24 months from a bag seal date in a storage environment of < 30°C and humidity < 70% RH.

If baking is required, refer to IPC/JEDEC J–STD–033 for bake procedure.

Construction

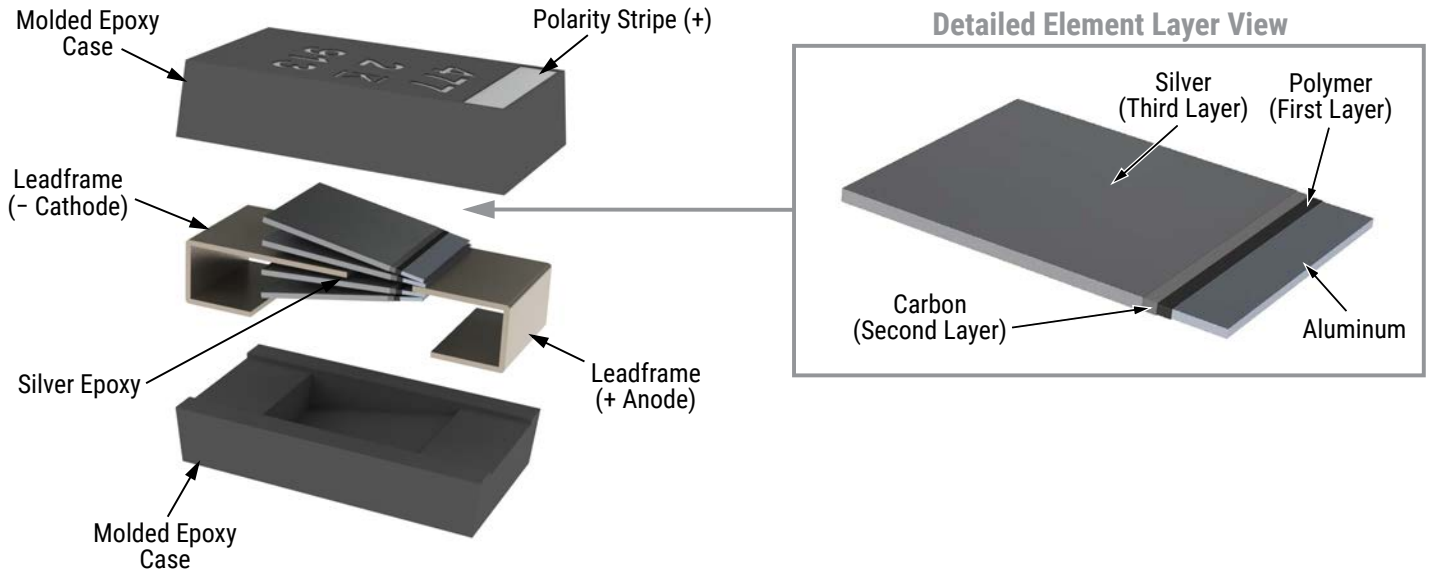

Capacitor Marking

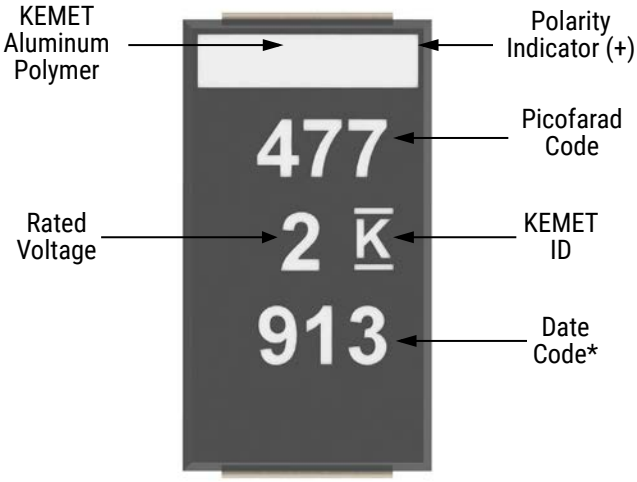

* 913 = 13th week of 2019

Date Code *	
1st digit = Last number of Year	5 = 2015 6 = 2016 7 = 2017 8 = 2018 9 =2019 0 = 2020
2nd and 3rd digit = Week of the Year	01 = 1st week of the Year to 52 = 52nd week of the Year

Tape & Reel Packaging Information

KEMET's molded chip capacitor families are packaged in 8 and 12 mm plastic tape on 7" and 13" reels in accordance with *EIA Standard 481*: Embossed Carrier Taping of Surface Mount Components for Automatic Handling. This packaging system is compatible with all tape-fed automatic pick-and-place systems.

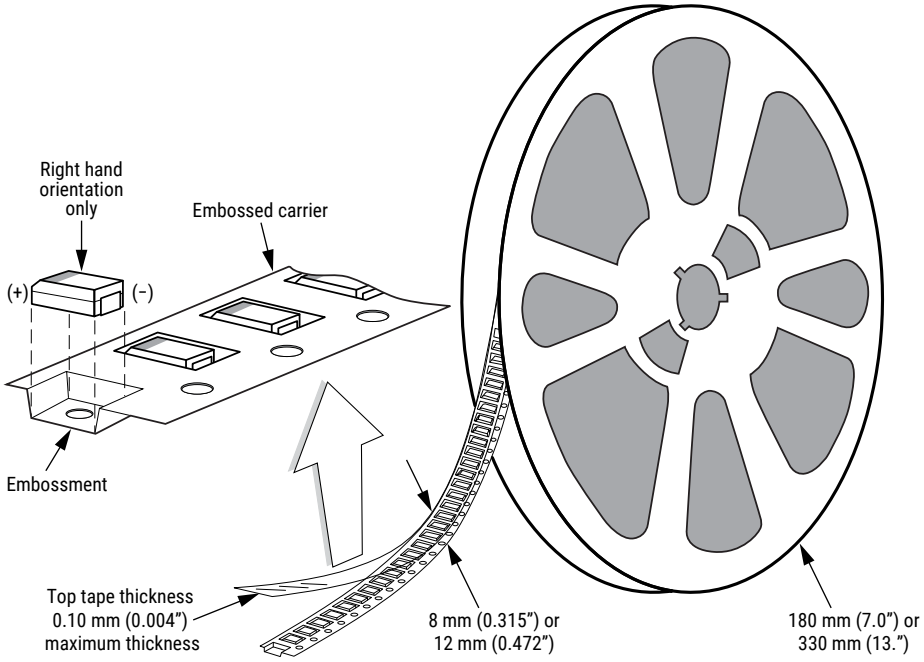

Table 3 – Packaging Quantity

Case Code		Tape Width (mm)	7" Reel*	13" Reel*
KEMET	EIA			
P	2012-10	8	3,000	N/A
R	2012-12	8	2,500	10,000
I	3216-10	8	3,000	N/A
S	3216-12	8	2,500	10,000
A	3216-18	8	2,000	N/A
T	3528-12	8	3,000	10,000
M	3528-15	8	2,500	8,000
B	3528-21	8	2,000	8,000
U	6032-15	12	1,000	5,000
L	6032-19	12	1,000	3,000
C	6032-28	12	500	3,000
Q	7343-12	12	1,000	3,000
W	7343-15	12	1,000	3,000
Z	7343-17	12	1,000	3,000
V	7343-19	12	1,000	3,000
D	7343-31	12	500	2,500
Y	7343-40	12	500	2,000
X	7343-43	12	500	2,000
J	7360-15	12	1,000	3,000
H	7360-20	12	1,000	3,000
O	7360-43	12	250	1,000

** No C-Spec required for 7" reel packaging. C-7280 required for 13" reel packaging.*

Figure 1 – Embossed (Plastic) Carrier Tape Dimensions

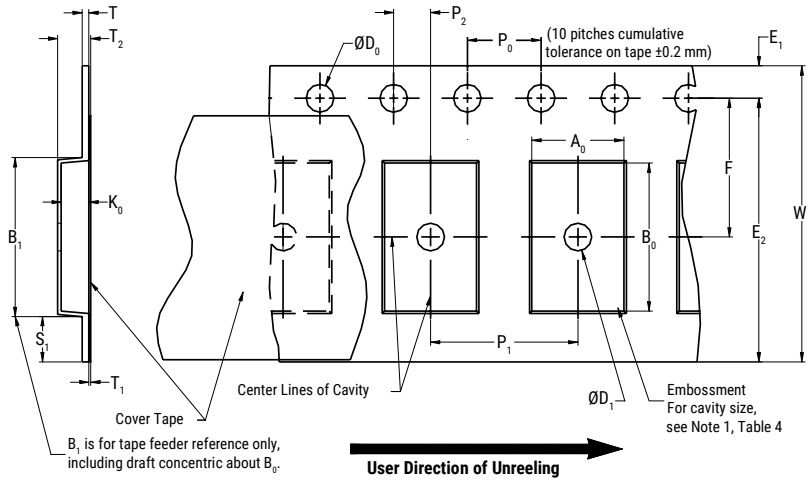

Table 4 – Embossed (Plastic) Carrier Tape Dimensions

Metric will govern

Constant Dimensions — Millimeters (Inches)									
Tape Size	D_0	D_1 Minimum Note 1	E_1	P_0	P_2	R Reference Note 2	S_1 Minimum Note 3	T Maximum	T_1 Maximum
8 mm	1.5 +0.10/−0.0 (0.059 +0.004/−0.0)	1.0 (0.039)	1.75 ±0.10 (0.069 ±0.004)	4.0 ±0.10 (0.157 ±0.004)	2.0 ±0.05 (0.079 ±0.002)	25.0 (0.984)	0.600 (0.024)	0.600 (0.024)	0.100 (0.004)
12 mm		1.5 (0.059)				30 (1.181)			

Variable Dimensions — Millimeters (Inches)								
Tape Size	Pitch	B_1 Maximum Note 4	E_2 Minimum	F	P_1	T_2 Maximum	W Maximum	A_0, B_0 & K_0
8 mm	Single (4 mm)	4.35 (0.171)	6.25 (0.246)	3.5 ±0.05 (0.138 ±0.002)	2.0 ±0.05 or 4.0 ±0.10 (0.079 ±0.002 or 0.157 ±0.004)	2.5 (0.098)	8.3 (0.327)	Note 5
12 mm	Single (4 mm) and Double (8 mm)	8.2 (0.323)	10.25 (0.404)	5.5 ±0.05 (0.217 ±0.002)	2.0 ±0.05 (0.079 ±0.002) or 4.0 ±0.10 (0.157 ±0.004) or 8.0 ±0.10 (0.315 ±0.004)	4.6 (0.181)	12.3 (0.484)	

1. *The embossment hole location shall be measured from the sprocket hole controlling the location of the embossment. Dimensions of embossment location and hole location shall be applied independent of each other.*
2. *The tape, with or without components, shall pass around R without damage (see Figure 4).*
3. *If S_1 < 1.0 mm, there may not be enough area for cover tape to be properly applied (see EIA Standard 481–D, paragraph 4.3, section b).*
4. *B_1 dimension is a reference dimension for tape feeder clearance only.*
5. *The cavity defined by A_0, B_0 and K_0 shall surround the component with sufficient clearance that:*
   (a) the component does not protrude above the top surface of the carrier tape.
   (b) the component can be removed from the cavity in a vertical direction without mechanical restriction, after the top cover tape has been removed.
   (c) rotation of the component is limited to 20° maximum for 8 and 12 mm tapes (see Figure 2).
   (d) lateral movement of the component is restricted to 0.5 mm maximum for 8 mm and 12 mm wide tape (see Figure 3).
   (e) see Addendum in EIA Standard 481–D for standards relating to more precise taping requirements.

Packaging Information Performance Notes

1. Cover tape break force: 1.0 kg minimum.
2. Cover tape peel strength: The total peel strength of the cover tape from the carrier tape shall be:

Tape Width	Peel Strength
8 mm	0.1 to 1.0 newton (10 to 100 gf)
12 mm	0.1 to 1.3 newton (10 to 130 gf)

The direction of the pull shall be opposite the direction of the carrier tape travel. The pull angle of the carrier tape shall be 165° to 180° from the plane of the carrier tape. During peeling, the carrier and/or cover tape shall be pulled at a velocity of 300 ±10 mm/minute.
3. Labeling: Bar code labeling (standard or custom) shall be on the side of the reel opposite the sprocket holes. *Refer to EIA Standards 556 and 624*.

Figure 2 – Maximum Component Rotation

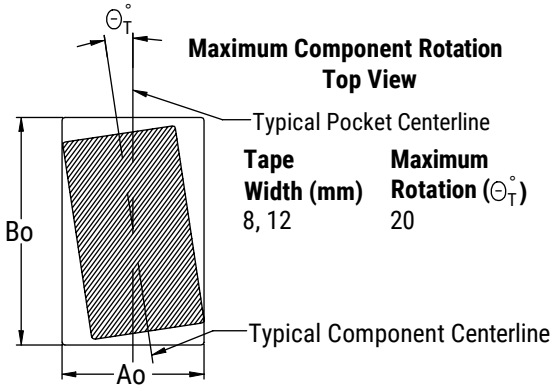

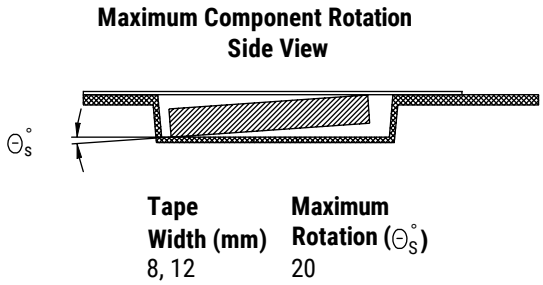

Figure 3 – Maximum Lateral Movement

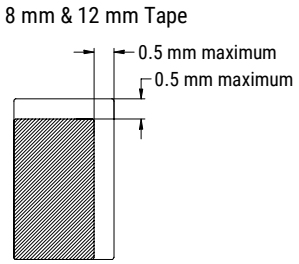

Figure 4 – Bending Radius

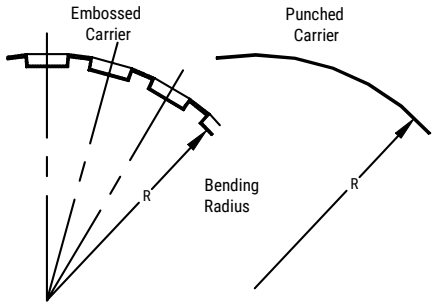

Figure 5 – Reel Dimensions

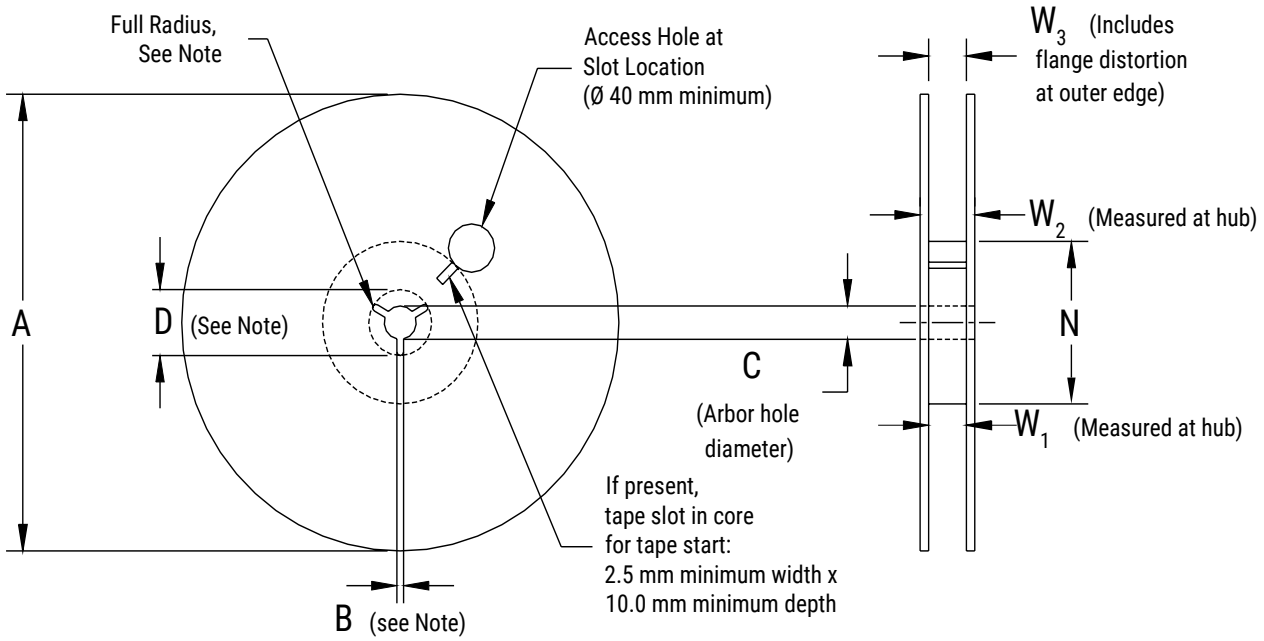

Note: Drive spokes optional; if used, dimensions B and D shall apply.

Table 5 – Reel Dimensions

Metric will govern

Constant Dimensions — Millimeters (Inches)				
Tape Size	A	B Minimum	C	D Minimum
8 mm	178 ±0.20 (7.008 ±0.008) or 330 ±0.20 (13.000 ±0.008)	1.5 (0.059)	13.0 +0.5/−0.2 (0.521 +0.02/−0.008)	20.2 (0.795)
12 mm				

Variable Dimensions — Millimeters (Inches)				
Tape Size	N Minimum	W_1	W_2 Maximum	W_3
8 mm	50 (1.969)	8.4 +1.5/−0.0 (0.331 +0.059/−0.0)	14.4 (0.567)	Shall accommodate tape width without interference
12 mm		12.4 +2.0/−0.0 (0.488 +0.078/−0.0)	18.4 (0.724)	

Figure 6 – Tape Leader & Trailer Dimensions

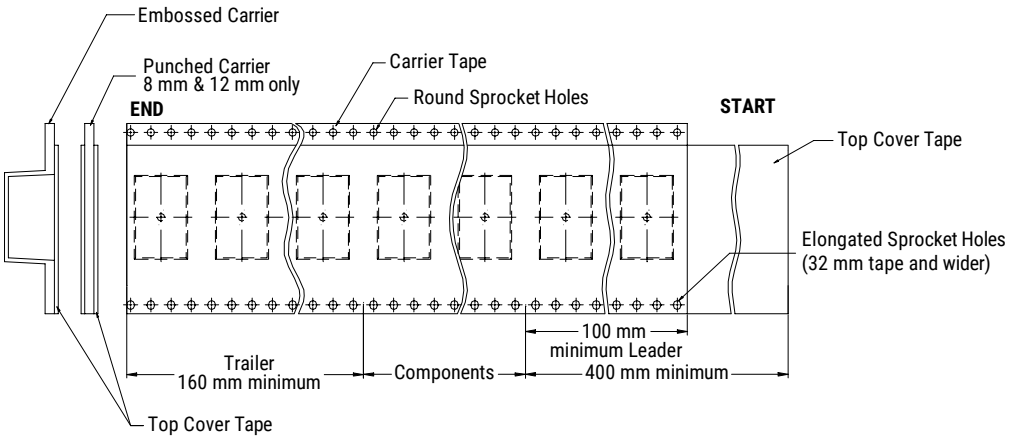

Figure 7 – Maximum Camber

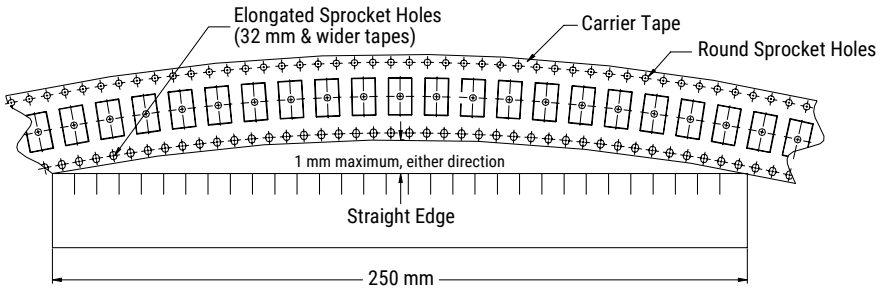

KEMET Electronics Corporation Sales Offices

For a complete list of our global sales offices, please visit www.kemet.com/sales.

Disclaimer

All product specifications, statements, information and data (collectively, the "Information") in this datasheet are subject to change. The customer is responsible for checking and verifying the extent to which the Information contained in this publication is applicable to an order at the time the order is placed. All Information given herein is believed to be accurate and reliable, but it is presented without guarantee, warranty, or responsibility of any kind, expressed or implied.

Statements of suitability for certain applications are based on KEMET Electronics Corporation's ("KEMET") knowledge of typical operating conditions for such applications, but are not intended to constitute – and KEMET specifically disclaims – any warranty concerning suitability for a specific customer application or use. The Information is intended for use only by customers who have the requisite experience and capability to determine the correct products for their application. Any technical advice inferred from this Information or otherwise provided by KEMET with reference to the use of KEMET's products is given gratis, and KEMET assumes no obligation or liability for the advice given or results obtained.

Although KEMET designs and manufactures its products to the most stringent quality and safety standards, given the current state of the art, isolated component failures may still occur. Accordingly, customer applications which require a high degree of reliability or safety should employ suitable designs or other safeguards (such as installation of protective circuitry or redundancies) in order to ensure that the failure of an electrical component does not result in a risk of personal injury or property damage.

Although all product–related warnings, cautions and notes must be observed, the customer should not assume that all safety measures are indicted or that other measures may not be required.

KEMET is a registered trademark of KEMET Electronics Corporation.

Общество с ограниченной ответственностью «МосЧип» ИНН 7719860671 / КПП 771901001
Адрес: 105318, г.Москва, ул.Щербаковская д.3, офис 1107

Данный компонент на территории Российской Федерации

Вы можете приобрести в компании MosChip.

Для оперативного оформления запроса Вам необходимо перейти по данной ссылке:

http://moschip.ru/get-element

Вы можете разместить у нас заказ для любого Вашего проекта, будь то серийное производство или разработка единичного прибора.

В нашем ассортименте представлены ведущие мировые производители активных и пассивных электронных компонентов.

Нашей специализацией является поставка электронной компонентной базы двойного назначения, продукции таких производителей как XILINX, Intel (ex.ALTERA), Vicor, Microchip, Texas Instruments, Analog Devices, Mini-Circuits, Amphenol, Glenair.

Сотрудничество с глобальными дистрибьюторами электронных компонентов, предоставляет возможность заказывать и получать с международных складов практически любой перечень компонентов в оптимальные для Вас сроки.

На всех этапах разработки и производства наши партнеры могут получить квалифицированную поддержку опытных инженеров.

Система менеджмента качества компании отвечает требованиям в соответствии с ГОСТ Р ИСО 9001, ГОСТ РВ 0015-002 и ЭС РД 009

Офис по работе с юридическими лицами:

105318, г.Москва, ул.Щербаковская д.3, офис 1107, 1118, ДЦ «Щербаковский»

Телефон: +7 495 668-12-70 (многоканальный)

Факс: +7 495 668-12-70 (доб.304)

E-mail: info@moschip.ru

Skype отдела продаж:
moschip.ru
moschip.ru_4
moschip.ru_6
moschip.ru_9