New Ocean Applicators from TE

Exceeding the Requirements of Today to Meet the Demands of Tomorrow

TE connectivity

New Ocean Applicator Series

With the knowledge and experience of over a half century designing and manufacturing world leading applicators and tooling, TE is taking terminal crimping to a new level. Using the time proven HDM and HDI applicator platforms as a base and the innovation and improvements from the System III Applicator, TE is taking a large step forward. TE has listened to customer input and market demands to innovate and improve the combined strength of these industry leading designs to create the new Ocean Applicator Series.

The lead and harness industry of today is more price and quality competitive than ever before. Crimping standards continue to be raised to higher levels of quality and repeatability. The industry continues to expect more from application tooling. The Ocean Applicator Series was designed specifically to exceed the requirements of today and meet the demands of tomorrow.

By consolidating our applicator offering to this new applicator, TE can provide design consistency and tooling standardization to the market. One of the major benefits to the customer is offering the ultimate flexibility with a choice of feeding options: New and improved Mechanical and Pneumatic feeds combined with the innovative and precise Servo Feed option. The Ocean Applicator design makes it possible for customers to perform field upgrades to System III technology. It will provide an upgrade path for *terminal intelligence* that allows the machine to obtain set-up features as the applicator is upgraded.

One Applicator Platform — Modular Family Design

- 2 ram interface styles (“Atlantic” or “Pacific” style ram collar)
- Same wire crimper, insulation crimper, and anvil used on both applicator styles
- 3 feed options
  - Mechanical
  - Pneumatic
  - Servo
- Same feed units can be used on Side-Feed and End-Feed style applicators. All units can be easily removed and interchanged for upgrades if desired.

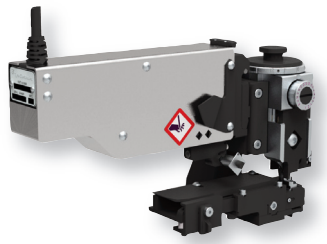

Atlantic-Style SF Servo

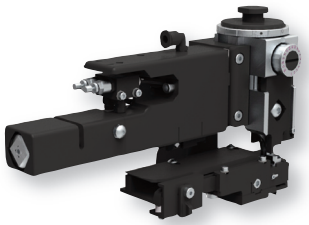

Atlantic-Style SF Pneumatic

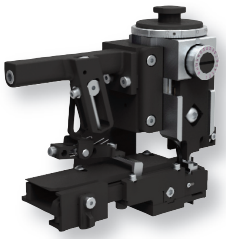

Atlantic-Style SF Mechanical

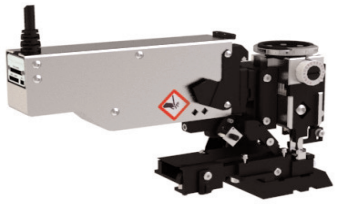

Pacific-Style SF Servo

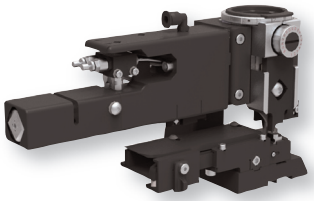

Pacific-Style SF Pneumatic

Pacific-Style SF Mechanical

Need More Information? For information about tooling, call 888-777-5917 or 717-810-2080 or e-mail toolingsales@te.com.

For drawings or technical data, contact your TE Connectivity sales engineer or call the Technical Support Center: 1-800-522-6752. Dimensions are in millimeters unless specified otherwise. Values in brackets are English equivalents unless specified otherwise. Specifications subject to change. Consult TE Connectivity for latest specifications.

Terminal Feed Types

Mechanical Feed

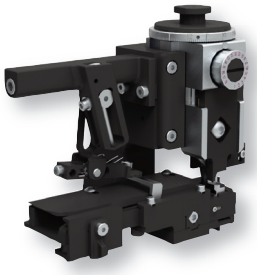

The industry standard TE mechanical feed design has been completely revamped to address the needs of today and the future. Mechanical designs of the past could be difficult for operators to adjust, particularly small applications that require the terminal to be located very precisely in the crimp area. Easily accessible micro adjustments for the forward and back stroke have been created. This allows for precise and repeatable terminal location in the crimp area.

During the development of this new feed mechanism several different designs from the industry were evaluated, along with the HDM mechanical feed mechanism. During this analysis it was discovered that all of the designs had an existing condition. This existing condition presented a major concern in the performance of mechanical feed designs. The roller (cam follower) that tracks the cam for the feed cycle to start and finish actually leaves the cam surface at the end of the cycle. It does not fully track the gradual slope of the cam. The result is an “instantaneous terminal acceleration” in the next feed cycle, produced by the sudden contact of the cam follower with the cam. This causes the terminal to be thrown forward instantly and not brought up to speed gradually as is preferred. This violent acceleration can lead to feed inaccuracy.

The TE mechanical feed design keeps the roller and cam in constant contact for a smooth transition through each feed cycle to offer superior feeding performance.

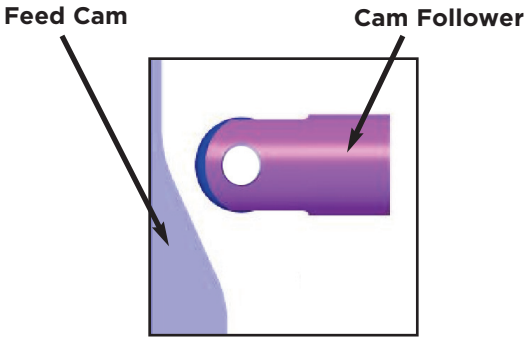

Industry Standard

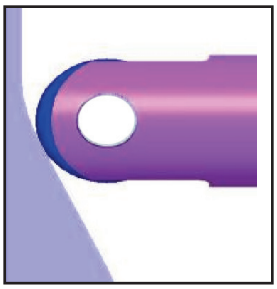

New Applicator

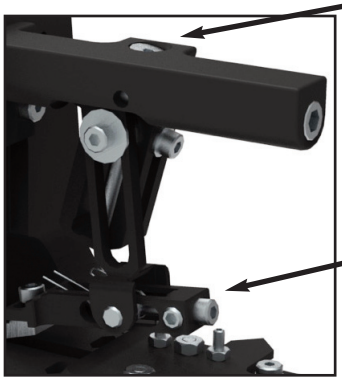

Need More Information? For information about tooling, call 888-777-5917 or 717-810-2080 or e-mail toolingsales@te.com.

For drawings or technical data, contact your TE Connectivity sales engineer or call the Technical Support Center: 1-800-522-6752. Dimensions are in millimeters unless specified otherwise. Values in brackets are English equivalents unless specified otherwise. Specifications subject to change. Consult TE Connectivity for latest specifications.

Terminal Feed Types

Pneumatic Feed

The pneumatic feed unit was designed to be self actuated by the applicator and only needs constant air supplied to the pneumatic feed unit. No terminator air valve is required. This allows the Pneumatic-Feed applicator to be compatible with many terminators including the TE AMP 3K/40, AMP 5K/40, Model G, Model T, DT3000 and DT5000 Terminators as well as many other competitive brands.

Improvements in the pneumatic feed provide flexibility and fine adjustment increments for a higher level of crimp precision. Quick and simple adjustments can be made since the forward terminal positioning and back stroke adjustment are independent of one another. The forward terminal location can be adjusted in very fine 0.04mm increments for precise terminal positioning in the crimp area. The back stroke is also incremental at 0.08mm steps.

The pneumatic cylinder was specially designed to be double acting with constant air pressure. This provides the ability to adjust the speed of actuation. The terminal positioning speed can be reduced to improve the repeatability of terminal placement.

All of the new applicators are completely metric to provide the convenience of a single set of tooling to adjust and perform maintenance. The pneumatic-feed can handle terminal feed lengths from the very small to the very large with a maximum of 48.25mm.

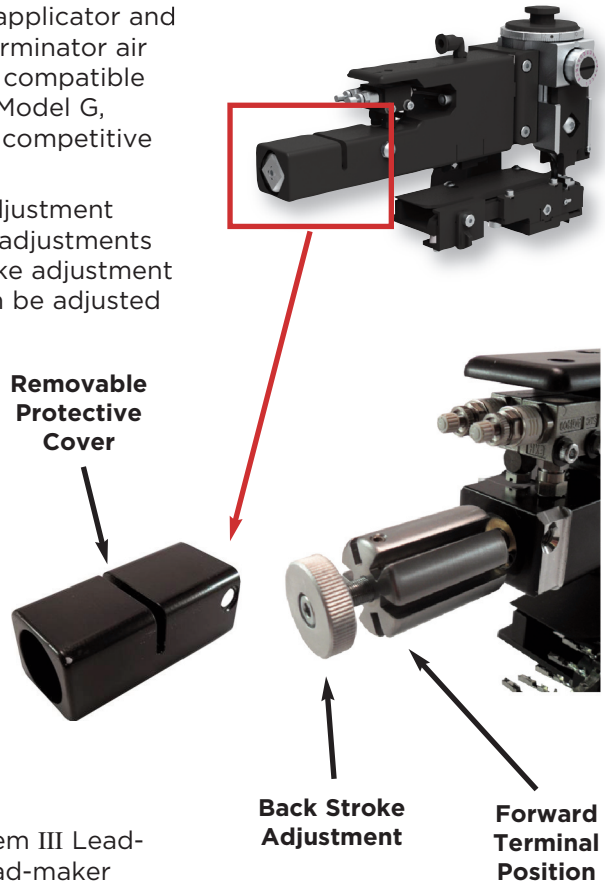

Servo Feed

The Servo Feed Applicator must be used with AMPOMATOR System III Lead-Maker or a Precision Controller unit attached to a terminator or lead-maker machine.

In the Servo Feed Applicator, the feed function is completely independent of the ram stroke. The limitations of the mechanical linkage are gone. Also gone are manual adjustment every time terminal spacing varies or feed errors arise, as well as the errors that rob machine uptime and reduce productivity. With a servo motor and ball screw drive system, the feed is controlled by commands from the terminator. The feed detaches from the crimp mechanism with a simple, tool-less latch. When the job changes, you only change the applicator; the servo feeder remains. The servo feed is so versatile and precise, with the push of a button the terminal is advanced or retracted by 0.03mm. The changes are then saved in the iButton data module.

The data module built into the Servo Feed Applicator stores the personality of the applicator, its identity, and the terminals it can crimp. It also contains all crimping parameters for system confirmation, including saving data on the previous run for easy access the next time the applicator is used. Data is transmitted through a simple contact for processing in the terminator and the system computer. There's no separate cable or connector, just the contact that completes the circuit when the applicator is snapped into place.

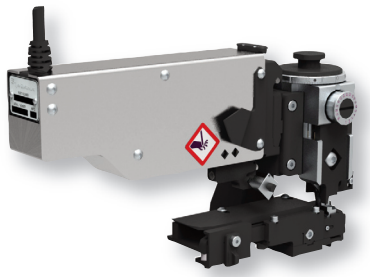

Need More Information? For information about tooling, call 888-777-5917 or 717-810-2080 or e-mail toolingsales@te.com.

For drawings or technical data, contact your TE Connectivity sales engineer or call the Technical Support Center: 1-800-522-6752. Dimensions are in millimeters unless specified otherwise. Values in brackets are English equivalents unless specified otherwise. Specifications subject to change. Consult TE Connectivity for latest specifications.

A Stronger, Smarter, More Reliable Applicator

It takes more than a better feed to make a better applicator. Along with the robust, reliable construction you expect from TE. The crimping section of the new Ocean Applicator incorporates redesigned components and optimized operation, without feed concerns or constraints. TE places emphasis on engineering products for the highest performance and longest life is reflected in some of the details of the design.

Terminal Hold Down

Terminal positioning is critical. As a result, the terminal depressor has been redesigned in the new Applicator. The terminal depressor is spring-loaded, which requires no adjustment between terminal crimp height changes, and is a solid steel piece for long life and positive terminal bend control.

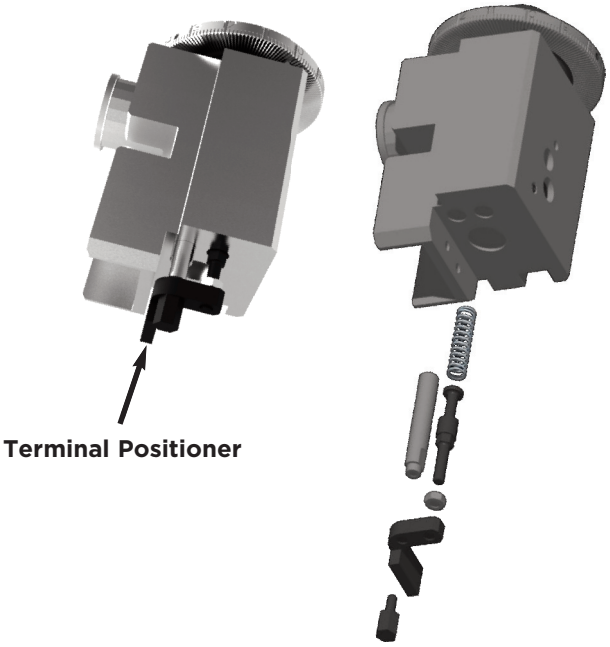

Fine Adjust Wire and Insulation Crimp Adjustments

The tool-less adjustment features have been developed to provide fine increments for improved precision and simple adjustments to help reduced setup times.

Wire crimp height adjustment

- Positive detent positioning
- Range = 0 - 1.5mm, Steps = 0.01mm

Insulation Adjustment	
Range (mm)	Step Size (mm)
3.30	0.19
1.70	0.10
0.85	0.05

- Insulation step sizes are selected based on terminal application requirements

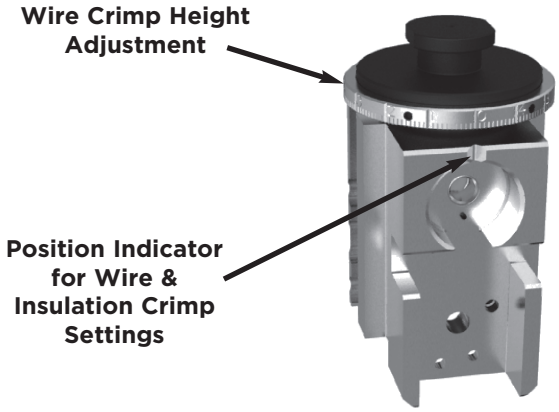

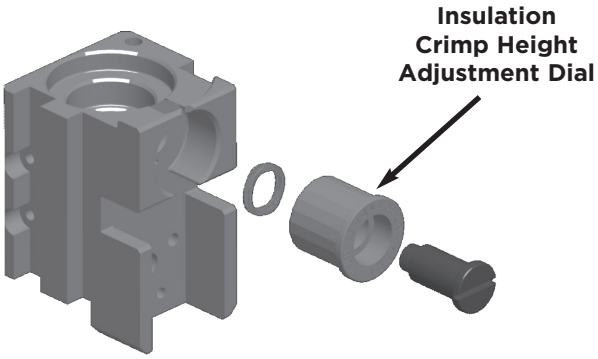

Need More Information? For information about tooling, call 888-777-5917 or 717-810-2080 or e-mail toolingsales@te.com.

For drawings or technical data, contact your TE Connectivity sales engineer or call the Technical Support Center: 1-800-522-6752. Dimensions are in millimeters unless specified otherwise. Values in brackets are English equivalents unless specified otherwise. Specifications subject to change. Consult TE Connectivity for latest specifications.

Ram and Housing

The ram and housing have been completely redesigned in an open architecture format. This configuration was selected to help standardize tooling and provide greater design flexibility to adapt a standard part configuration to a wider variety of applications. Additionally, the ram way interface was enhanced for improved alignment and crimp consistency. Also, the bearing surface was increased for greater support and wear resistance.

Mechanical Counter

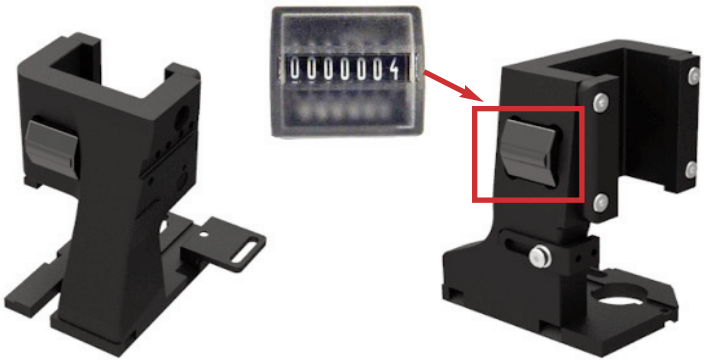

Standard Features on all Applicators

One of the major design goals of the Ocean Applicator Series was increased flexibility. By giving the applicator the ability to flex between different terminator configurations it allows customers to quickly adapt their applicators to whatever configuration is needed. All parts to reconfigure the applicator are included and attachable to the unit for safe storage and quick access.

As standard equipment the new applicator will have all the accessories needed to switch between 30 and 40mm stroke terminators, pre-feed and post-feed cam configurations and cut and no-cut carrier options. The wire stop / wire stripper can also be easily adjusted for the desired applications, and a mechanical counter is included for tracking cycle counts. The applicator comes with all parts needed to configure it to any terminating method that is acceptable to the application.

Standard Features

- Pre-feed and post-feed cams
- Cut and no-cut carrier options
- Adjustable terminal stripper
- Adjustable spring-loaded terminal hold down
- Mechanical counter
- Fine adjust crimp height mechanisms

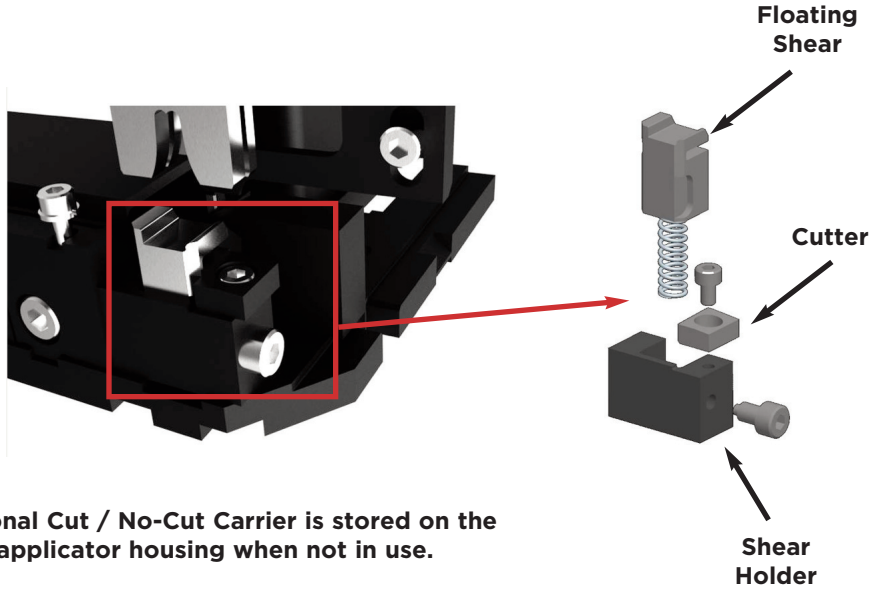

Optional Cut / No-Cut Carrier is stored on the applicator housing when not in use.

Need More Information? For information about tooling, call 888-777-5917 or 717-810-2080 or e-mail toolingsales@te.com.

For drawings or technical data, contact your TE Connectivity sales engineer or call the Technical Support Center: 1-800-522-6752. Dimensions are in millimeters unless specified otherwise. Values in brackets are English equivalents unless specified otherwise. Specifications subject to change. Consult TE Connectivity for latest specifications.

Ocean Applicator Part Number System

Because so many features have been added to the new applicator the part numbering system used to identify the applicators can be simplified significantly. Now, when ordering a new applicator the customer will only need to identify what style and feed type they require.

Part Number System	Feed Type	Description	Part Number
Atlantic Style	Mechanical	Fine Crimp Height Adjust	2151054-1
	Pneumatic	Fine Crimp Height Adjust	2151054-2
	Servo	Fine Crimp Height Adjust	2151054-5
	Servo	Non-Crimp Height Adjust*	2151054-6
	No Feed	Fine Crimp Height Adjust	2151054-7
		Spare Parts Kit	7-2151054-7
	Feed Type	**Description**	**Part Number**
Pacific Style	Mechanical	Fine Crimp Height Adjust	2-2151054-1
	Pneumatic	Fine Crimp Height Adjust	2-2151054-2
	Servo	Fine Crimp Height Adjust	2-2151054-5
	No Feed	Fine Crimp Height Adjust	2-2151054-7
		Spare Parts Kit	7-2151054-8

* Non-Crimp Height Adjust Applicator is designed to run in a terminator with System III Crimp Height Adjust Technology.

Replacement Crimp Tooling

- Highly polished, precisely machined, chrome-plated surfaces, reducing friction and terminal sticking
- Bell-mouth design on both ends of the crimp, producing better crimp compliance and longer-lasting terminations
- Special alloy steel for maximum strength to withstand shock during crimping
- Easy-to-use cross reference on our website to identify the tooling and applicator suitable for your requirement
- Well stocked inventories ensure fast delivery

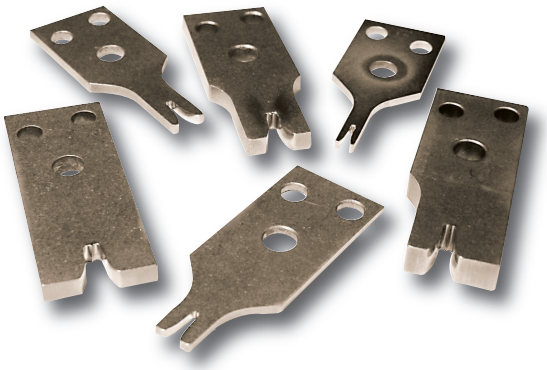

Need More Information? For information about tooling, call 888-777-5917 or 717-810-2080 or e-mail toolingsales@te.com.

For drawings or technical data, contact your TE Connectivity sales engineer or call the Technical Support Center: 1-800-522-6752. Dimensions are in millimeters unless specified otherwise. Values in brackets are English equivalents unless specified otherwise. Specifications subject to change. Consult TE Connectivity for latest specifications.

tooling.te.com
tooling.te.com/china
tooling.te.com/europe

For information about tooling, call 888-777-5917 or 717-810-2080
or e-mail toolingsales@te.com.

Catalog 4-1773460-5 / 10-11 / Application Tooling
©2011 by Tyco Electronics Corporation. All Rights Reserved.
AMP, AMPOMATOR, TE Connectivity and TE Connectivity (Logo) are trademarks.
¡Button is a registered trademark of Maxim Integrated Products, Inc.

In the interest of continuous improvement, TE reserves the right to modify, discontinue or replace any products.

Общество с ограниченной ответственностью «МосЧип» ИНН 7719860671 / КПП 771901001
Адрес: 105318, г.Москва, ул.Щербаковская д.3, офис 1107

Данный компонент на территории Российской Федерации

Вы можете приобрести в компании MosChip.

Для оперативного оформления запроса Вам необходимо перейти по данной ссылке:

http://moschip.ru/get-element

Вы можете разместить у нас заказ для любого Вашего проекта, будь то серийное производство или разработка единичного прибора.

В нашем ассортименте представлены ведущие мировые производители активных и пассивных электронных компонентов.

Нашей специализацией является поставка электронной компонентной базы двойного назначения, продукции таких производителей как XILINX, Intel (ex.ALTERA), Vicor, Microchip, Texas Instruments, Analog Devices, Mini-Circuits, Amphenol, Glenair.

Сотрудничество с глобальными дистрибьюторами электронных компонентов, предоставляет возможность заказывать и получать с международных складов практически любой перечень компонентов в оптимальные для Вас сроки.

На всех этапах разработки и производства наши партнеры могут получить квалифицированную поддержку опытных инженеров.

Система менеджмента качества компании отвечает требованиям в соответствии с ГОСТ Р ИСО 9001, ГОСТ РВ 0015-002 и ЭС РД 009

Офис по работе с юридическими лицами:

105318, г.Москва, ул.Щербаковская д.3, офис 1107, 1118, ДЦ «Щербаковский»

Телефон: +7 495 668-12-70 (многоканальный)

Факс: +7 495 668-12-70 (доб.304)

E-mail: info@moschip.ru

Skype отдела продаж:
moschip.ru
moschip.ru_4
moschip.ru_6
moschip.ru_9