- **Single Supply or Dual Supplies**
- **Wide Range of Supply Voltage**
  - **Max Rating . . . 2 V to 36 V**
  - **Tested to 30 V . . . Non-V Devices**
  - **Tested to 32 V . . . V-Suffix Devices**
- **Low Supply-Current Drain Independent of Supply Voltage . . . 0.4 mA Typ Per Comparator**
- **Low Input Bias Current . . . 25 nA Typ**
- **Low Input Offset Current . . . 3 nA Typ (LM193)**
- **Low Input Offset Voltage . . . 2 mV Typ**
- **Common-Mode Input Voltage Range Includes Ground**
- **Differential Input Voltage Range Equal to Maximum-Rated Supply Voltage . . . ±36 V**
- **Low Output Saturation Voltage**
- **Output Compatible With TTL, MOS, and CMOS**

LM193 . . . D OR JG PACKAGE
LM293 . . . D, DGK, OR P PACKAGE
LM293A . . . D OR DGK PACKAGE
LM393, LM393A . . . D, DGK, P, PS, OR PW PACKAGE
LM2903 . . . D, DGK, P, PS, OR PW PACKAGE
(TOP VIEW)

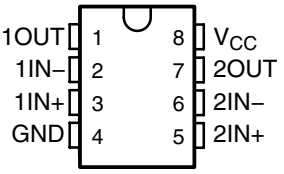

LM193 . . . FK PACKAGE
(TOP VIEW)

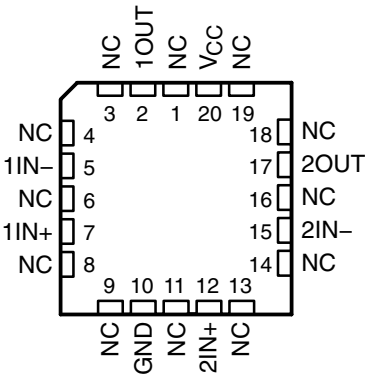

NC – No internal connection

description/ordering information

These devices consist of two independent voltage comparators that are designed to operate from a single power supply over a wide range of voltages. Operation from dual supplies also is possible as long as the difference between the two supplies is 2 V to 36 V, and V_{CC} is at least 1.5 V more positive than the input common-mode voltage. Current drain is independent of the supply voltage. The outputs can be connected to other open-collector outputs to achieve wired-AND relationships.

The LM193 is characterized for operation from –55°C to 125°C. The LM293 and LM293A are characterized for operation from –25°C to 85°C. The LM393 and LM393A are characterized for operation from 0°C to 70°C. The LM2903 is characterized for operation from –40°C to 125°C.

Please be aware that an important notice concerning availability, standard warranty, and use in critical applications of Texas Instruments semiconductor products and disclaimers thereto appears at the end of this data sheet.

PRODUCTION DATA information is current as of publication date. Products conform to specifications per the terms of Texas Instruments standard warranty. Production processing does not necessarily include testing of all parameters.

Copyright © 2010, Texas Instruments Incorporated
On products compliant to MIL-PRF-38535, all parameters are tested unless otherwise noted. On all other products, production processing does not necessarily include testing of all parameters.

ORDERING INFORMATION†

T_A	V_{IOmax} AT 25°C	MAX V_{CC}	PACKAGE‡		ORDERABLE PART NUMBER	TOP-SIDE MARKING
0°C to 70°C	5 mV	30 V	PDIP (P)	Tube of 50	LM393P	LM393P
			SOIC (D)	Tube of 75	LM393D	LM393
				Reel of 2500	LM393DR	
				Reel of 2500	LM393DRG3	
			SOP (PS)	Reel of 2000	LM393PSR	L393
			TSSOP (PW)	Tube of 150	LM393PW	L393
				Reel of 2000	LM393PWR	
				Reel of 2000	LM393PWRG3	
			MSOP/VSSOP (DGK)	Reel of 2500	LM393DGKR	M9_§
	2 mV	30 V	PDIP (P)	Tube of 50	LM393AP	LM393AP
			SOIC (D)	Tube of 75	LM393AD	LM393A
				Reel of 2500	LM393ADR	
			SOP (PS)	Reel of 2000	LM393APSR	L393A
			TSSOP (PW)	Reel of 2000	LM393APWR	L393A
			MSOP/VSSOP (DGK)	Reel of 2500	LM393ADGKR	M8_§
–25°C to 85°C	5 mV	30 V	PDIP (P)	Tube of 50	LM293P	LM293P
			SOIC (D)	Tube of 75	LM293D	LM293
				Reel of 2500	LM293DR	
				Reel of 2500	LM293DRG3	
			MSOP/VSSOP (DGK)	Reel of 2500	LM293DGKR	MC_§
	2 mV	30 V	SOIC (D)	Tube of 75	LM293AD	LM293A
				Reel of 2500	LM293ADR	
			MSOP/VSSOP (DGK)	Reel of 2500	LM293ADGKR	MD_§
–40°C to 125°C	7 mV	30 V	PDIP (P)	Tube of 50	LM2903P	LM2903P
			SOIC (D)	Tube of 75	LM2903D	LM2903
				Reel of 2500	LM2903DR	
				Reel of 2500	LM2903DRG3	
			SOP (PS)	Reel of 2000	LM2903PSR	L2903
			TSSOP (PW)	Reel of 2000	LM2903PWR	L2903
				Reel of 2000	LM2903PWRG3	
			MSOP/VSSOP (DGK)	Reel of 2500	LM2903DGKR	MA_§
	7 mV	32 V	SOIC (D)	Reel of 2500	LM2903VQDR	L2903V
			TSSOP (PW)	Reel of 2000	LM2903VQPWR	L2903V
	2 mV	32 V	SOIC (D)	Reel of 2500	LM2903AVQDR	L2903AV
			TSSOP (PW)	Reel of 2000	LM2903AVQPWR	L2903AV
–55°C to 125°C	5 mV	30 V	CDIP (JG)	Tube of 50	LM193JG	LM193JG
			LCCC (FK)	Tube of 55	LM193FK	LM193FK
			SOIC (D)	Reel of 2500	LM193DR	LM193

† For the most current package and ordering information, see the Package Option Addendum at the end of this document, or see the TI web site at www.ti.com.

‡ Package drawings, thermal data, and symbolization are available at www.ti.com/packaging.

§ The actual top-side marking has one additional character that designates the wafer fab/assembly site.

symbol (each comparator)

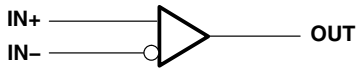

schematic (each comparator)

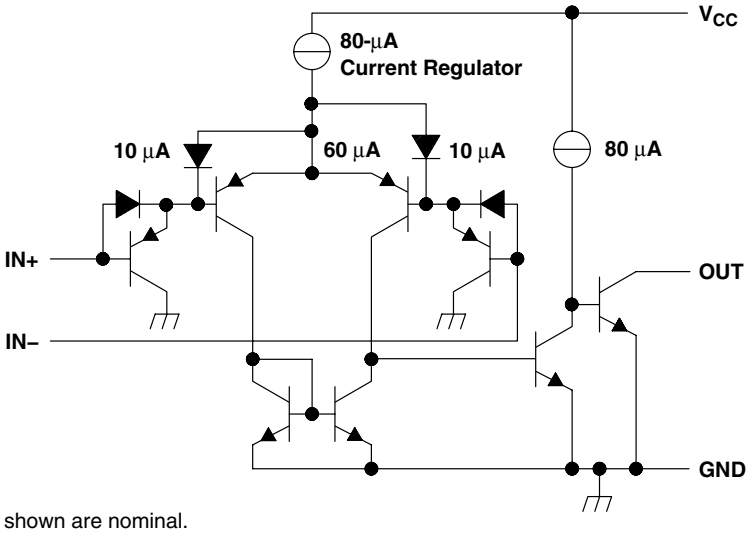

COMPONENT COUNT	
Epi-FET	1
Diodes	2
Resistors	2
Transistors	30

Current values shown are nominal.

absolute maximum ratings over operating free-air temperature range (unless otherwise noted)†

Supply voltage, V_{CC} (see Note 1)		36 V
Differential input voltage, V_{ID} (see Note 2)		±36 V
Input voltage range, V_I (either input)		–0.3 V to 36 V
Output voltage, V_O		36 V
Output current, I_O		20 mA
Duration of output short-circuit to ground (see Note 3)		Unlimited
Package thermal impedance, θ_{JA} (see Notes 4 and 5):	D package	97°C/W
	DGK package	172°C/W
	P package	85°C/W
	PS package	95°C/W
	PW package	149°C/W
Package thermal impedance, θ_{JC} (see Notes 6 and 7):	FK package	5.61°C/W
	JG package	14.5°C/W
Operating virtual junction temperature, T_J		150°C
Case temperature for 60 seconds: FK package		260°C
Lead temperature 1,6 mm (1/16 inch) from case for 60 seconds: JG package		300°C
Storage temperature range, T_{stg}		–65°C to 150°C

† Stresses beyond those listed under “absolute maximum ratings” may cause permanent damage to the device. These are stress ratings only, and functional operation of the device at these or any other conditions beyond those indicated under “recommended operating conditions” is not implied. Exposure to absolute-maximum-rated conditions for extended periods may affect device reliability.

NOTES:
1. All voltage values, except differential voltages, are with respect to GND.
2. Differential voltages are at IN+, with respect to IN–.
3. Short circuits from outputs to V_{CC} can cause excessive heating and eventual destruction.
4. Maximum power dissipation is a function of $T_J(max)$, θ_{JA}, and T_A. The maximum allowable power dissipation at any allowable ambient temperature is $P_D = (T_J(max) – T_A)/\theta_{JA}$. Operating at the absolute maximum T_J of 150°C can affect reliability.
5. The package thermal impedance is calculated in accordance with JESD 51-7.
6. Maximum power dissipation is a function of $T_J(max)$, θ_{JC}, and T_C. The maximum allowable power dissipation at any allowable case temperature is $P_D = (T_J(max) – T_C)/\theta_{JC}$. Operating at the absolute maximum T_J of 150°C can affect reliability.
7. The package thermal impedance is calculated in accordance with MIL-STD-883.

electrical characteristics at specified free-air temperature, V_{CC} = 5 V (unless otherwise noted)

PARAMETER		TEST CONDITIONS		T_A†	LM193			LM293 LM393			UNIT
					MIN	TYP	MAX	MIN	TYP	MAX	
V_{IO}	Input offset voltage	V_{CC} = 5 V to 30 V, V_O = 1.4 V, $V_{IC} = V_{IC(min)}$		25°C		2	5		2	5	mV
				Full range			9			9	
I_{IO}	Input offset current	V_O = 1.4 V		25°C		3	25		5	50	nA
				Full range			100			250	
I_{IB}	Input bias current	V_O = 1.4 V		25°C		–25	–100		–25	–250	nA
				Full range			–300			–400	
V_{ICR}	Common-mode input voltage range‡			25°C	0 to V_{CC} – 1.5			0 to V_{CC} – 1.5			V
				Full range	0 to V_{CC} – 2			0 to V_{CC} – 2			
A_{VD}	Large-signal differential-voltage amplification	V_{CC} = 15 V, V_O = 1.4 V to 11.4 V, $R_L \geq 15\ k\Omega$ to V_{CC}		25°C	50	200		50	200		V/mV
I_{OH}	High-level output current	V_{OH} = 5 V,	V_{ID} = 1 V	25°C		0.1			0.1	50	nA
		V_{OH} = 30 V,	V_{ID} = 1 V	Full range			1			1	µA
V_{OL}	Low-level output voltage	I_{OL} = 4 mA,	V_{ID} = –1 V	25°C		150	400		150	400	mV
				Full range			700			700	
I_{OL}	Low-level output current	V_{OL} = 1.5 V,	V_{ID} = –1 V	25°C	6			6			mA
I_{CC}	Supply current	$R_L = \infty$	V_{CC} = 5 V	25°C		0.8	1		0.8	1	mA
			V_{CC} = 30 V	Full range			2.5			2.5	

† Full range (MIN or MAX) for LM193 is –55°C to 125°C, for LM293 is 25°C to 85°C, and for LM393 is 0°C to 70°C. All characteristics are measured with zero common-mode input voltage, unless otherwise specified.

‡ The voltage at either input or common-mode should not be allowed to go negative by more than 0.3 V. The upper end of the common-mode voltage range is V_{CC}+ – 1.5 V for the inverting input (–), and the non-inverting input (+) can exceed the V_{CC} level; the comparator provides a proper output state. Either or both inputs can go to 30 V without damage.

electrical characteristics at specified free-air temperature, V_{CC} = 5 V (unless otherwise noted)

PARAMETER		TEST CONDITIONS		T_A†	LM293A LM393A			UNIT
					MIN	TYP	MAX	
V_{IO}	Input offset voltage	V_{CC} = 5 V to 30 V, V_O = 1.4 V, V_{IC} = $V_{IC(min)}$		25°C		1	2	mV
				Full range			4	
I_{IO}	Input offset current	V_O = 1.4 V		25°C		5	50	nA
				Full range			150	
I_{IB}	Input bias current	V_O = 1.4 V		25°C		–25	–250	nA
				Full range			–400	
V_{ICR}	Common-mode input voltage range§			25°C	0 to V_{CC} – 1.5			V
				Full range	0 to V_{CC} – 2			
A_{VD}	Large-signal differential-voltage amplification	V_{CC} = 15 V, V_O = 1.4 V to 11.4 V, $R_L \geq 15\ k\Omega$ to V_{CC}		25°C	50	200		V/mV
I_{OH}	High-level output current	V_{OH} = 5 V,	V_{ID} = 1 V	25°C		0.1	50	nA
		V_{OH} = 30 V,	V_{ID} = 1 V	Full range			1	μA
V_{OL}	Low-level output voltage	I_{OL} = 4 mA,	V_{ID} = –1 V	25°C		150	400	mV
				Full range			700	
I_{OL}	Low-level output current	V_{OL} = 1.5 V,	V_{ID} = –1 V	25°C	6			mA
I_{CC}	Supply current	R_L = ∞	V_{CC} = 5 V	25°C		0.8	1	mA
			V_{CC} = 30 V	Full range			2.5	

† Full range (MIN or MAX) for LM293A is 25°C to 85°C, and for LM393A is 0°C to 70°C. All characteristics are measured with zero common-mode input voltage, unless otherwise specified.

§ The voltage at either input or common-mode should not be allowed to go negative by more than 0.3 V. The upper end of the common-mode voltage range is V_{CC+} – 1.5 V, but either or both inputs can go to 30 V without damage.

electrical characteristics at specified free-air temperature, V_{CC} = 5 V (unless otherwise noted)

PARAMETER		TEST CONDITIONS		T_A†	LM2903			LM2903A			UNIT
					MIN	TYP	MAX	MIN	TYP	MAX	
V_{IO}	Input offset voltage	V_{CC} = 5 V to MAX‡, V_O = 1.4 V, $V_{IC} = V_{IC(min)}$		25°C		2	7		1	2	mV
				Full range			15			4	
I_{IO}	Input offset current	V_O = 1.4 V		25°C		5	50		5	50	nA
				Full range			200			200	
I_{IB}	Input bias current	V_O = 1.4 V		25°C		–25	–250		–25	–250	nA
				Full range			–500			–500	
V_{ICR}	Common-mode input voltage range§			25°C	0 to V_{CC} – 1.5			0 to V_{CC} – 1.5			V
				Full range	0 to V_{CC} – 2			0 to V_{CC} – 2			
A_{VD}	Large-signal differential-voltage amplification	V_{CC} = 15 V, V_O = 1.4 V to 11.4 V, $R_L \geq 15$ kΩ to V_{CC}		25°C	25	100		25	100		V/mV
I_{OH}	High-level output current	V_{OH} = 5 V,	V_{ID} = 1 V	25°C		0.1	50		0.1	50	nA
		$V_{OH} = V_{CC}$ MAX,	V_{ID} = 1 V	Full range			1			1	µA
V_{OL}	Low-level output voltage	I_{OL} = 4 mA,	V_{ID} = –1 V	25°C		150	400		150	400	mV
				Full range			700			700	
I_{OL}	Low-level output current	V_{OL} = 1.5 V,	V_{ID} = –1 V	25°C	6			6			mA
I_{CC}	Supply current	$R_L = \infty$	V_{CC} = 5 V	25°C		0.8	1		0.8	1	mA
			V_{CC} = MAX	Full range			2.5			2.5	

† Full range (MIN or MAX) for LM2903 is –40°C to 125°C. All characteristics are measured with zero common-mode input voltage, unless otherwise specified.

‡ V_{CC} MAX = 30 V for non-V devices and 32 V for V-suffix devices.

§ The voltage at either input or common-mode should not be allowed to go negative by more than 0.3 V. The upper end of the common-mode voltage range is V_{CC+} – 1.5 V, but either or both inputs can go to 30 V (32 V for V-suffix devices) without damage.

switching characteristics, V_{CC} = 5 V, T_A = 25°C

PARAMETER	TEST CONDITIONS		LM193, LM293, LM293A, LM393, LM393A, LM2903	UNIT
			TYP	
Response time	R_L connected to 5 V through 5.1 kΩ, C_L = 15 pF¶, See Note 8	100-mV input step with 5-mV overdrive	1.3	µs
		TTL-level input step	0.3	

¶ C_L includes probe and jig capacitance.

NOTE 8: The response time specified is the interval between the input step function and the instant when the output crosses 1.4 V.

PACKAGING INFORMATION

Orderable Device	Status (1)	Package Type	Package Drawing	Pins	Package Qty	Eco Plan (2)	Lead/Ball Finish	MSL Peak Temp (3)	Op Temp (°C)	Top-Side Markings (4)	Samples
5962-9452601Q2A	ACTIVE	LCCC	FK	20	1	TBD	Call TI	Call TI	-55 to 125	5962-9452601Q2A LM193FKB	Samples
5962-9452601QPA	ACTIVE	CDIP	JG	8	1	TBD	Call TI	Call TI	-55 to 125	9452601QPA LM193	Samples
JM38510/11202BPA	ACTIVE	CDIP	JG	8	1	TBD	A42	N / A for Pkg Type	-55 to 125	JM38510 /11202BPA	Samples
LM193DR	ACTIVE	SOIC	D	8	2500	Green (RoHS & no Sb/Br)	CU NIPDAU	Level-1-260C-UNLIM	-55 to 125	LM193	Samples
LM193DRG4	ACTIVE	SOIC	D	8	2500	Green (RoHS & no Sb/Br)	CU NIPDAU	Level-1-260C-UNLIM	-55 to 125	LM193	Samples
LM193FKB	ACTIVE	LCCC	FK	20	1	TBD	POST-PLATE	N / A for Pkg Type	-55 to 125	5962-9452601Q2A LM193FKB	Samples
LM193JG	ACTIVE	CDIP	JG	8	1	TBD	A42	N / A for Pkg Type	-55 to 125	LM193JG	Samples
LM193JGB	ACTIVE	CDIP	JG	8	1	TBD	A42	N / A for Pkg Type	-55 to 125	9452601QPA LM193	Samples
LM2903AVQDR	ACTIVE	SOIC	D	8	2500	Green (RoHS & no Sb/Br)	CU NIPDAU	Level-1-260C-UNLIM	-40 to 125	L2903AV	Samples
LM2903AVQDRG4	ACTIVE	SOIC	D	8	2500	Green (RoHS & no Sb/Br)	CU NIPDAU	Level-1-260C-UNLIM	-40 to 125	L2903AV	Samples
LM2903AVQPWR	ACTIVE	TSSOP	PW	8	2000	Green (RoHS & no Sb/Br)	CU NIPDAU	Level-1-260C-UNLIM	-40 to 125	L2903AV	Samples
LM2903AVQPWRG4	ACTIVE	TSSOP	PW	8	2000	Green (RoHS & no Sb/Br)	CU NIPDAU	Level-1-260C-UNLIM	-40 to 125	L2903AV	Samples
LM2903D	ACTIVE	SOIC	D	8	75	Green (RoHS & no Sb/Br)	CU NIPDAU	Level-1-260C-UNLIM	-40 to 125	LM2903	Samples
LM2903DE4	ACTIVE	SOIC	D	8	75	Green (RoHS & no Sb/Br)	CU NIPDAU	Level-1-260C-UNLIM	-40 to 125	LM2903	Samples
LM2903DG4	ACTIVE	SOIC	D	8	75	Green (RoHS & no Sb/Br)	CU NIPDAU	Level-1-260C-UNLIM	-40 to 125	LM2903	Samples
LM2903DGKR	ACTIVE	VSSOP	DGK	8	2500	Green (RoHS & no Sb/Br)	CU NIPDAU	Level-1-260C-UNLIM	-40 to 125	(MAP ~ MAS ~ MAU)	Samples

Orderable Device	Status (1)	Package Type	Package Drawing	Pins	Package Qty	Eco Plan (2)	Lead/Ball Finish	MSL Peak Temp (3)	Op Temp (°C)	Top-Side Markings (4)	Samples
LM2903DGKRG4	ACTIVE	VSSOP	DGK	8	2500	Green (RoHS & no Sb/Br)	CU NIPDAU	Level-1-260C-UNLIM	-40 to 125	(MAP ~ MAS ~ MAU)	Samples
LM2903DR	ACTIVE	SOIC	D	8	2500	Green (RoHS & no Sb/Br)	CU NIPDAU	Level-1-260C-UNLIM	-40 to 125	LM2903	Samples
LM2903DRE4	ACTIVE	SOIC	D	8	2500	Green (RoHS & no Sb/Br)	CU NIPDAU	Level-1-260C-UNLIM	-40 to 125	LM2903	Samples
LM2903DRG3	ACTIVE	SOIC	D	8	2500	Green (RoHS & no Sb/Br)	CU SN	Level-1-260C-UNLIM	-40 to 125	LM2903	Samples
LM2903DRG4	ACTIVE	SOIC	D	8	2500	Green (RoHS & no Sb/Br)	CU NIPDAU	Level-1-260C-UNLIM	-40 to 125	LM2903	Samples
LM2903P	ACTIVE	PDIP	P	8	50	Pb-Free (RoHS)	CU NIPDAU	N / A for Pkg Type	-40 to 125	LM2903P	Samples
LM2903PE4	ACTIVE	PDIP	P	8	50	Pb-Free (RoHS)	CU NIPDAU	N / A for Pkg Type	-40 to 125	LM2903P	Samples
LM2903PSR	ACTIVE	SO	PS	8	2000	Green (RoHS & no Sb/Br)	CU NIPDAU	Level-1-260C-UNLIM	-40 to 125	L2903	Samples
LM2903PSRG4	ACTIVE	SO	PS	8	2000	Green (RoHS & no Sb/Br)	CU NIPDAU	Level-1-260C-UNLIM	-40 to 125	L2903	Samples
LM2903PWLE	OBSOLETE	TSSOP	PW	8		TBD	Call TI	Call TI	-40 to 125		
LM2903PWR	ACTIVE	TSSOP	PW	8	2000	Green (RoHS & no Sb/Br)	CU NIPDAU	Level-1-260C-UNLIM	-40 to 125	L2903	Samples
LM2903PWRE4	ACTIVE	TSSOP	PW	8	2000	Green (RoHS & no Sb/Br)	CU NIPDAU	Level-1-260C-UNLIM	-40 to 125	L2903	Samples
LM2903PWRG3	ACTIVE	TSSOP	PW	8	2000	Green (RoHS & no Sb/Br)	CU SN	Level-1-260C-UNLIM	-40 to 125	L2903	Samples
LM2903PWRG4	ACTIVE	TSSOP	PW	8	2000	Green (RoHS & no Sb/Br)	CU NIPDAU	Level-1-260C-UNLIM	-40 to 125	L2903	Samples
LM2903QD	ACTIVE	SOIC	D	8	75	Green (RoHS & no Sb/Br)	CU NIPDAU	Level-1-260C-UNLIM	-40 to 125	2903Q	Samples
LM2903QDG4	ACTIVE	SOIC	D	8	75	Green (RoHS & no Sb/Br)	CU NIPDAU	Level-1-260C-UNLIM	-40 to 125	2903Q	Samples
LM2903QDR	ACTIVE	SOIC	D	8	2500	Green (RoHS & no Sb/Br)	CU NIPDAU	Level-1-260C-UNLIM	-40 to 125	2903Q	Samples
LM2903QDRG4	ACTIVE	SOIC	D	8	2500	Green (RoHS & no Sb/Br)	CU NIPDAU	Level-1-260C-UNLIM	-40 to 125	2903Q	Samples
LM2903QP	OBSOLETE	PDIP	P	8		TBD	Call TI	Call TI	-40 to 125		

Orderable Device	Status (1)	Package Type	Package Drawing	Pins	Package Qty	Eco Plan (2)	Lead/Ball Finish	MSL Peak Temp (3)	Op Temp (°C)	Top-Side Markings (4)	Samples
LM2903VQDR	ACTIVE	SOIC	D	8	2500	Green (RoHS & no Sb/Br)	CU NIPDAU	Level-1-260C-UNLIM	-40 to 125	L2903V	Samples
LM2903VQDRG4	ACTIVE	SOIC	D	8	2500	Green (RoHS & no Sb/Br)	CU NIPDAU	Level-1-260C-UNLIM	-40 to 125	L2903V	Samples
LM2903VQPWR	ACTIVE	TSSOP	PW	8	2000	Green (RoHS & no Sb/Br)	CU NIPDAU	Level-1-260C-UNLIM	-40 to 125	L2903V	Samples
LM2903VQPWRG4	ACTIVE	TSSOP	PW	8	2000	Green (RoHS & no Sb/Br)	CU NIPDAU	Level-1-260C-UNLIM	-40 to 125	L2903V	Samples
LM293AD	ACTIVE	SOIC	D	8	75	Green (RoHS & no Sb/Br)	CU NIPDAU	Level-1-260C-UNLIM	-25 to 85	LM293A	Samples
LM293ADE4	ACTIVE	SOIC	D	8	75	Green (RoHS & no Sb/Br)	CU NIPDAU	Level-1-260C-UNLIM	-25 to 85	LM293A	Samples
LM293ADG4	ACTIVE	SOIC	D	8	75	Green (RoHS & no Sb/Br)	CU NIPDAU	Level-1-260C-UNLIM	-25 to 85	LM293A	Samples
LM293ADGKR	ACTIVE	VSSOP	DGK	8	2500	Green (RoHS & no Sb/Br)	CU NIPDAU	Level-1-260C-UNLIM	-25 to 85	(MDP ~ MDS ~ MDU)	Samples
LM293ADGKRG4	ACTIVE	VSSOP	DGK	8	2500	Green (RoHS & no Sb/Br)	CU NIPDAU	Level-1-260C-UNLIM	-25 to 85	(MDP ~ MDS ~ MDU)	Samples
LM293ADR	ACTIVE	SOIC	D	8	2500	Green (RoHS & no Sb/Br)	CU NIPDAU	Level-1-260C-UNLIM	-25 to 85	LM293A	Samples
LM293ADRE4	ACTIVE	SOIC	D	8	2500	Green (RoHS & no Sb/Br)	CU NIPDAU	Level-1-260C-UNLIM	-25 to 85	LM293A	Samples
LM293ADRG4	ACTIVE	SOIC	D	8	2500	Green (RoHS & no Sb/Br)	CU NIPDAU	Level-1-260C-UNLIM	-25 to 85	LM293A	Samples
LM293D	ACTIVE	SOIC	D	8	75	Green (RoHS & no Sb/Br)	CU NIPDAU	Level-1-260C-UNLIM	-25 to 85	LM293	Samples
LM293DE4	ACTIVE	SOIC	D	8	75	Green (RoHS & no Sb/Br)	CU NIPDAU	Level-1-260C-UNLIM	-25 to 85	LM293	Samples
LM293DG4	ACTIVE	SOIC	D	8	75	Green (RoHS & no Sb/Br)	CU NIPDAU	Level-1-260C-UNLIM	-25 to 85	LM293	Samples
LM293DGKR	ACTIVE	VSSOP	DGK	8	2500	Green (RoHS & no Sb/Br)	CU NIPDAU	Level-1-260C-UNLIM	-25 to 85	(MCP ~ MCS ~ MCU)	Samples
LM293DGKRG4	ACTIVE	VSSOP	DGK	8	2500	Green (RoHS & no Sb/Br)	CU NIPDAU	Level-1-260C-UNLIM	-25 to 85	(MCP ~ MCS ~ MCU)	Samples
LM293DR	ACTIVE	SOIC	D	8	2500	Green (RoHS & no Sb/Br)	CU NIPDAU	Level-1-260C-UNLIM	-25 to 85	LM293	Samples

Orderable Device	Status (1)	Package Type	Package Drawing	Pins	Package Qty	Eco Plan (2)	Lead/Ball Finish	MSL Peak Temp (3)	Op Temp (°C)	Top-Side Markings (4)	Samples
LM293DRE4	ACTIVE	SOIC	D	8	2500	Green (RoHS & no Sb/Br)	CU NIPDAU	Level-1-260C-UNLIM	-25 to 85	LM293	Samples
LM293DRG3	ACTIVE	SOIC	D	8	2500	Green (RoHS & no Sb/Br)	CU SN	Level-1-260C-UNLIM	-25 to 85	LM293	Samples
LM293DRG4	ACTIVE	SOIC	D	8	2500	Green (RoHS & no Sb/Br)	CU NIPDAU	Level-1-260C-UNLIM	-25 to 85	LM293	Samples
LM293P	ACTIVE	PDIP	P	8	50	Pb-Free (RoHS)	CU NIPDAU	N / A for Pkg Type	-25 to 85	LM293P	Samples
LM293PE4	ACTIVE	PDIP	P	8	50	Pb-Free (RoHS)	CU NIPDAU	N / A for Pkg Type	-25 to 85	LM293P	Samples
LM393AD	ACTIVE	SOIC	D	8	75	Green (RoHS & no Sb/Br)	CU NIPDAU	Level-1-260C-UNLIM	0 to 70	LM393A	Samples
LM393ADE4	ACTIVE	SOIC	D	8	75	Green (RoHS & no Sb/Br)	CU NIPDAU	Level-1-260C-UNLIM	0 to 70	LM393A	Samples
LM393ADG4	ACTIVE	SOIC	D	8	75	Green (RoHS & no Sb/Br)	CU NIPDAU	Level-1-260C-UNLIM	0 to 70	LM393A	Samples
LM393ADGKR	ACTIVE	VSSOP	DGK	8	2500	Green (RoHS & no Sb/Br)	CU NIPDAU	Level-1-260C-UNLIM	0 to 70	(M8P ~ M8S ~ M8U)	Samples
LM393ADGKRG4	ACTIVE	VSSOP	DGK	8	2500	Green (RoHS & no Sb/Br)	CU NIPDAU	Level-1-260C-UNLIM	0 to 70	(M8P ~ M8S ~ M8U)	Samples
LM393ADR	ACTIVE	SOIC	D	8	2500	Green (RoHS & no Sb/Br)	CU NIPDAU	Level-1-260C-UNLIM	0 to 70	LM393A	Samples
LM393ADRE4	ACTIVE	SOIC	D	8	2500	Green (RoHS & no Sb/Br)	CU NIPDAU	Level-1-260C-UNLIM	0 to 70	LM393A	Samples
LM393ADRG4	ACTIVE	SOIC	D	8	2500	Green (RoHS & no Sb/Br)	CU NIPDAU	Level-1-260C-UNLIM	0 to 70	LM393A	Samples
LM393AP	ACTIVE	PDIP	P	8	50	Pb-Free (RoHS)	CU NIPDAU	N / A for Pkg Type	0 to 70	LM393AP	Samples
LM393APE4	ACTIVE	PDIP	P	8	50	Pb-Free (RoHS)	CU NIPDAU	N / A for Pkg Type	0 to 70	LM393AP	Samples
LM393APSR	ACTIVE	SO	PS	8	2000	Green (RoHS & no Sb/Br)	CU NIPDAU	Level-1-260C-UNLIM	0 to 70	L393A	Samples
LM393APSRE4	ACTIVE	SO	PS	8	2000	Green (RoHS & no Sb/Br)	CU NIPDAU	Level-1-260C-UNLIM	0 to 70	L393A	Samples
LM393APSRG4	ACTIVE	SO	PS	8	2000	Green (RoHS & no Sb/Br)	CU NIPDAU	Level-1-260C-UNLIM	0 to 70	L393A	Samples

Orderable Device	Status (1)	Package Type	Package Drawing	Pins	Package Qty	Eco Plan (2)	Lead/Ball Finish	MSL Peak Temp (3)	Op Temp (°C)	Top-Side Markings (4)	Samples
LM393APWLE	OBSOLETE	TSSOP	PW	8		TBD	Call TI	Call TI	0 to 70		
LM393APWR	ACTIVE	TSSOP	PW	8	2000	Green (RoHS & no Sb/Br)	CU NIPDAU	Level-1-260C-UNLIM	0 to 70	L393A	Samples
LM393APWRE4	ACTIVE	TSSOP	PW	8	2000	Green (RoHS & no Sb/Br)	CU NIPDAU	Level-1-260C-UNLIM	0 to 70	L393A	Samples
LM393APWRG4	ACTIVE	TSSOP	PW	8	2000	Green (RoHS & no Sb/Br)	CU NIPDAU	Level-1-260C-UNLIM	0 to 70	L393A	Samples
LM393D	ACTIVE	SOIC	D	8	75	Green (RoHS & no Sb/Br)	CU NIPDAU	Level-1-260C-UNLIM	0 to 70	LM393	Samples
LM393DE4	ACTIVE	SOIC	D	8	75	Green (RoHS & no Sb/Br)	CU NIPDAU	Level-1-260C-UNLIM	0 to 70	LM393	Samples
LM393DG4	ACTIVE	SOIC	D	8	75	Green (RoHS & no Sb/Br)	CU NIPDAU	Level-1-260C-UNLIM	0 to 70	LM393	Samples
LM393DGKR	ACTIVE	VSSOP	DGK	8	2500	Green (RoHS & no Sb/Br)	CU NIPDAU	Level-1-260C-UNLIM	0 to 70	(M9P ~ M9S ~ M9U)	Samples
LM393DGKRG4	ACTIVE	VSSOP	DGK	8	2500	Green (RoHS & no Sb/Br)	CU NIPDAU	Level-1-260C-UNLIM	0 to 70	(M9P ~ M9S ~ M9U)	Samples
LM393DR	ACTIVE	SOIC	D	8	2500	Green (RoHS & no Sb/Br)	CU NIPDAU	Level-1-260C-UNLIM	0 to 70	LM393	Samples
LM393DRE4	ACTIVE	SOIC	D	8	2500	Green (RoHS & no Sb/Br)	CU NIPDAU	Level-1-260C-UNLIM	0 to 70	LM393	Samples
LM393DRG3	ACTIVE	SOIC	D	8	2500	Green (RoHS & no Sb/Br)	CU SN	Level-1-260C-UNLIM	0 to 70	LM393	Samples
LM393DRG4	ACTIVE	SOIC	D	8	2500	Green (RoHS & no Sb/Br)	CU NIPDAU	Level-1-260C-UNLIM	0 to 70	LM393	Samples
LM393P	ACTIVE	PDIP	P	8	50	Pb-Free (RoHS)	CU NIPDAU	N / A for Pkg Type	0 to 70	LM393P	Samples
LM393PE3	ACTIVE	PDIP	P	8	50	Pb-Free (RoHS)	CU SN	N / A for Pkg Type	0 to 70	LM393P	Samples
LM393PE4	ACTIVE	PDIP	P	8	50	Pb-Free (RoHS)	CU NIPDAU	N / A for Pkg Type	0 to 70	LM393P	Samples
LM393PSLE	OBSOLETE	SO	PS	8		TBD	Call TI	Call TI	0 to 70		
LM393PSR	ACTIVE	SO	PS	8	2000	Green (RoHS & no Sb/Br)	CU NIPDAU	Level-1-260C-UNLIM	0 to 70	L393	Samples
LM393PSRG4	ACTIVE	SO	PS	8	2000	Green (RoHS & no Sb/Br)	CU NIPDAU	Level-1-260C-UNLIM	0 to 70	L393	Samples

Orderable Device	Status (1)	Package Type	Package Drawing	Pins	Package Qty	Eco Plan (2)	Lead/Ball Finish	MSL Peak Temp (3)	Op Temp (°C)	Top-Side Markings (4)	Samples
LM393PW	ACTIVE	TSSOP	PW	8	150	Green (RoHS & no Sb/Br)	CU NIPDAU	Level-1-260C-UNLIM	0 to 70	L393	Samples
LM393PWE4	ACTIVE	TSSOP	PW	8	150	Green (RoHS & no Sb/Br)	CU NIPDAU	Level-1-260C-UNLIM	0 to 70	L393	Samples
LM393PWG4	ACTIVE	TSSOP	PW	8	150	Green (RoHS & no Sb/Br)	CU NIPDAU	Level-1-260C-UNLIM	0 to 70	L393	Samples
LM393PWLE	OBSOLETE	TSSOP	PW	8		TBD	Call TI	Call TI	0 to 70		
LM393PWR	ACTIVE	TSSOP	PW	8	2000	Green (RoHS & no Sb/Br)	CU NIPDAU	Level-1-260C-UNLIM	0 to 70	L393	Samples
LM393PWRE4	ACTIVE	TSSOP	PW	8	2000	Green (RoHS & no Sb/Br)	CU NIPDAU	Level-1-260C-UNLIM	0 to 70	L393	Samples
LM393PWRG3	ACTIVE	TSSOP	PW	8	2000	Green (RoHS & no Sb/Br)	CU SN	Level-1-260C-UNLIM	0 to 70	L393	Samples
LM393PWRG4	ACTIVE	TSSOP	PW	8	2000	Green (RoHS & no Sb/Br)	CU NIPDAU	Level-1-260C-UNLIM	0 to 70	L393	Samples
M38510/11202BPA	ACTIVE	CDIP	JG	8	1	TBD	A42	N / A for Pkg Type	-55 to 125	JM38510 /11202BPA	Samples

(1) The marketing status values are defined as follows:
ACTIVE: Product device recommended for new designs.
LIFEBUY: TI has announced that the device will be discontinued, and a lifetime-buy period is in effect.
NRND: Not recommended for new designs. Device is in production to support existing customers, but TI does not recommend using this part in a new design.
PREVIEW: Device has been announced but is not in production. Samples may or may not be available.
OBSOLETE: TI has discontinued the production of the device.

(2) Eco Plan - The planned eco-friendly classification: Pb-Free (RoHS), Pb-Free (RoHS Exempt), or Green (RoHS & no Sb/Br) - please check http://www.ti.com/productcontent for the latest availability information and additional product content details.
TBD: The Pb-Free/Green conversion plan has not been defined.
Pb-Free (RoHS): TI's terms "Lead-Free" or "Pb-Free" mean semiconductor products that are compatible with the current RoHS requirements for all 6 substances, including the requirement that lead not exceed 0.1% by weight in homogeneous materials. Where designed to be soldered at high temperatures, TI Pb-Free products are suitable for use in specified lead-free processes.
Pb-Free (RoHS Exempt): This component has a RoHS exemption for either 1) lead-based flip-chip solder bumps used between the die and package, or 2) lead-based die adhesive used between the die and leadframe. The component is otherwise considered Pb-Free (RoHS compatible) as defined above.
Green (RoHS & no Sb/Br): TI defines "Green" to mean Pb-Free (RoHS compatible), and free of Bromine (Br) and Antimony (Sb) based flame retardants (Br or Sb do not exceed 0.1% by weight in homogeneous material)

(3) MSL, Peak Temp. -- The Moisture Sensitivity Level rating according to the JEDEC industry standard classifications, and peak solder temperature.

(4) Multiple Top-Side Markings will be inside parentheses. Only one Top-Side Marking contained in parentheses and separated by a "~" will appear on a device. If a line is indented then it is a continuation of the previous line and the two combined represent the entire Top-Side Marking for that device.

Important Information and Disclaimer: The information provided on this page represents TI's knowledge and belief as of the date that it is provided. TI bases its knowledge and belief on information provided by third parties, and makes no representation or warranty as to the accuracy of such information. Efforts are underway to better integrate information from third parties. TI has taken and continues to take reasonable steps to provide representative and accurate information but may not have conducted destructive testing or chemical analysis on incoming materials and chemicals. TI and TI suppliers consider certain information to be proprietary, and thus CAS numbers and other limited information may not be available for release.

In no event shall TI's liability arising out of such information exceed the total purchase price of the TI part(s) at issue in this document sold by TI to Customer on an annual basis.

OTHER QUALIFIED VERSIONS OF LM2903, LM293 :

- Automotive: LM2903-Q1
- Enhanced Product: LM293-EP

NOTE: Qualified Version Definitions:

- Automotive - Q100 devices qualified for high-reliability automotive applications targeting zero defects
- Enhanced Product - Supports Defense, Aerospace and Medical Applications

TAPE AND REEL INFORMATION

REEL DIMENSIONS

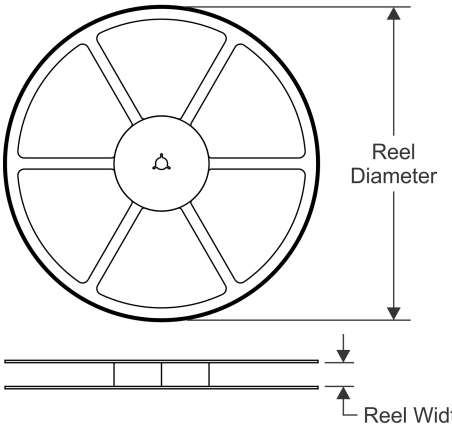

TAPE DIMENSIONS

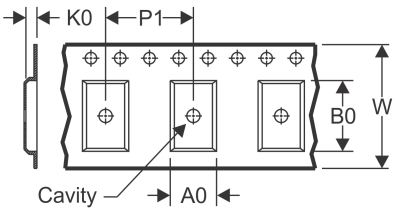

A0	Dimension designed to accommodate the component width
B0	Dimension designed to accommodate the component length
K0	Dimension designed to accommodate the component thickness
W	Overall width of the carrier tape
P1	Pitch between successive cavity centers

QUADRANT ASSIGNMENTS FOR PIN 1 ORIENTATION IN TAPE

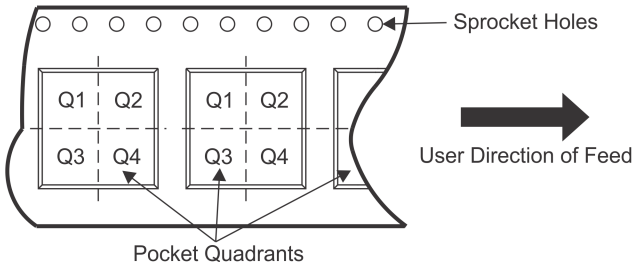

*All dimensions are nominal

Device	Package Type	Package Drawing	Pins	SPQ	Reel Diameter (mm)	Reel Width W1 (mm)	A0 (mm)	B0 (mm)	K0 (mm)	P1 (mm)	W (mm)	Pin1 Quadrant
LM193DR	SOIC	D	8	2500	330.0	12.4	6.4	5.2	2.1	8.0	12.0	Q1
LM2903DGKR	VSSOP	DGK	8	2500	330.0	12.4	5.3	3.4	1.4	8.0	12.0	Q1
LM2903DR	SOIC	D	8	2500	330.0	12.4	6.4	5.2	2.1	8.0	12.0	Q1
LM2903DR	SOIC	D	8	2500	330.0	12.4	6.4	5.2	2.1	8.0	12.0	Q1
LM2903DRG4	SOIC	D	8	2500	330.0	12.4	6.4	5.2	2.1	8.0	12.0	Q1
LM2903DRG4	SOIC	D	8	2500	330.0	12.4	6.4	5.2	2.1	8.0	12.0	Q1
LM2903PSR	SO	PS	8	2000	330.0	16.4	8.2	6.6	2.5	12.0	16.0	Q1
LM2903PWR	TSSOP	PW	8	2000	330.0	12.4	7.0	3.6	1.6	8.0	12.0	Q1
LM2903PWRG3	TSSOP	PW	8	2000	330.0	12.4	7.0	3.6	1.6	8.0	12.0	Q1
LM2903QDR	SOIC	D	8	2500	330.0	12.4	6.4	5.2	2.1	8.0	12.0	Q1
LM2903QDRG4	SOIC	D	8	2500	330.0	12.4	6.4	5.2	2.1	8.0	12.0	Q1
LM2903VQPWRG4	TSSOP	PW	8	2000	330.0	12.4	7.0	3.6	1.6	8.0	12.0	Q1
LM293ADGKR	VSSOP	DGK	8	2500	330.0	12.4	5.3	3.4	1.4	8.0	12.0	Q1
LM293ADR	SOIC	D	8	2500	330.0	12.4	6.4	5.2	2.1	8.0	12.0	Q1
LM293ADR	SOIC	D	8	2500	330.0	12.4	6.4	5.2	2.1	8.0	12.0	Q1
LM293ADRG4	SOIC	D	8	2500	330.0	12.4	6.4	5.2	2.1	8.0	12.0	Q1
LM293ADRG4	SOIC	D	8	2500	330.0	12.4	6.4	5.2	2.1	8.0	12.0	Q1
LM293DGKR	VSSOP	DGK	8	2500	330.0	12.4	5.3	3.4	1.4	8.0	12.0	Q1

Device	Package Type	Package Drawing	Pins	SPQ	Reel Diameter (mm)	Reel Width W1 (mm)	A0 (mm)	B0 (mm)	K0 (mm)	P1 (mm)	W (mm)	Pin1 Quadrant
LM293DR	SOIC	D	8	2500	330.0	12.4	6.4	5.2	2.1	8.0	12.0	Q1
LM293DR	SOIC	D	8	2500	330.0	12.4	6.4	5.2	2.1	8.0	12.0	Q1
LM293DRG4	SOIC	D	8	2500	330.0	12.4	6.4	5.2	2.1	8.0	12.0	Q1
LM293DRG4	SOIC	D	8	2500	330.0	12.4	6.4	5.2	2.1	8.0	12.0	Q1
LM393ADGKR	VSSOP	DGK	8	2500	330.0	12.4	5.3	3.4	1.4	8.0	12.0	Q1
LM393ADR	SOIC	D	8	2500	330.0	12.4	6.4	5.2	2.1	8.0	12.0	Q1
LM393ADR	SOIC	D	8	2500	330.0	12.4	6.4	5.2	2.1	8.0	12.0	Q1
LM393ADRG4	SOIC	D	8	2500	330.0	12.4	6.4	5.2	2.1	8.0	12.0	Q1
LM393ADRG4	SOIC	D	8	2500	330.0	12.4	6.4	5.2	2.1	8.0	12.0	Q1
LM393APSR	SO	PS	8	2000	330.0	16.4	8.2	6.6	2.5	12.0	16.0	Q1
LM393APWR	TSSOP	PW	8	2000	330.0	12.4	7.0	3.6	1.6	8.0	12.0	Q1
LM393DGKR	VSSOP	DGK	8	2500	330.0	12.4	5.3	3.4	1.4	8.0	12.0	Q1
LM393DR	SOIC	D	8	2500	330.0	12.4	6.4	5.2	2.1	8.0	12.0	Q1
LM393DR	SOIC	D	8	2500	330.0	12.4	6.4	5.2	2.1	8.0	12.0	Q1
LM393DRG4	SOIC	D	8	2500	330.0	12.4	6.4	5.2	2.1	8.0	12.0	Q1
LM393DRG4	SOIC	D	8	2500	330.0	12.4	6.4	5.2	2.1	8.0	12.0	Q1
LM393PSR	SO	PS	8	2000	330.0	16.4	8.2	6.6	2.5	12.0	16.0	Q1
LM393PWR	TSSOP	PW	8	2000	330.0	12.4	7.0	3.6	1.6	8.0	12.0	Q1
LM393PWRG3	TSSOP	PW	8	2000	330.0	12.4	7.0	3.6	1.6	8.0	12.0	Q1

TAPE AND REEL BOX DIMENSIONS

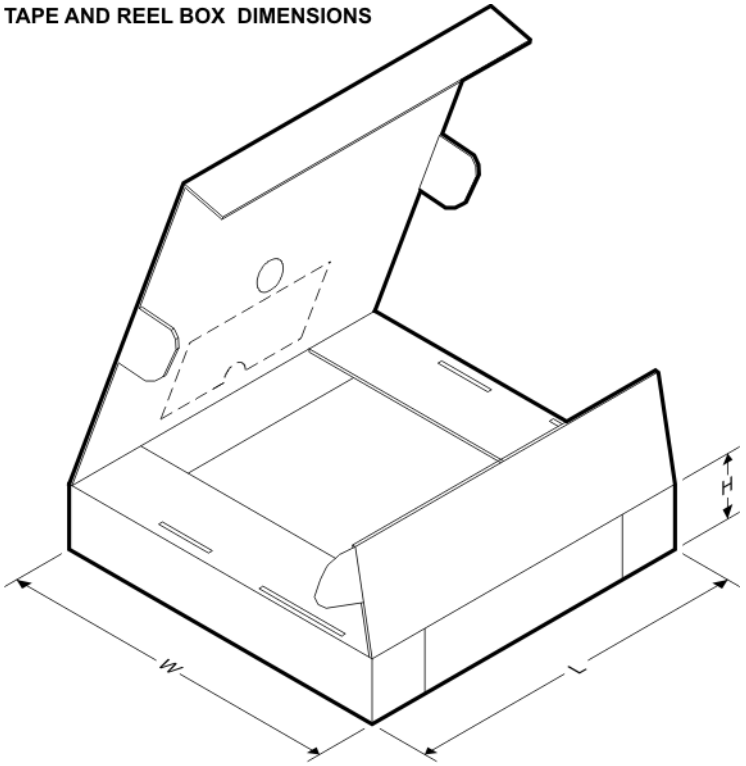

*All dimensions are nominal

Device	Package Type	Package Drawing	Pins	SPQ	Length (mm)	Width (mm)	Height (mm)
LM193DR	SOIC	D	8	2500	367.0	367.0	35.0
LM2903DGKR	VSSOP	DGK	8	2500	364.0	364.0	27.0
LM2903DR	SOIC	D	8	2500	367.0	367.0	35.0
LM2903DR	SOIC	D	8	2500	340.5	338.1	20.6
LM2903DRG4	SOIC	D	8	2500	340.5	338.1	20.6
LM2903DRG4	SOIC	D	8	2500	367.0	367.0	35.0
LM2903PSR	SO	PS	8	2000	367.0	367.0	38.0
LM2903PWR	TSSOP	PW	8	2000	364.0	364.0	27.0
LM2903PWRG3	TSSOP	PW	8	2000	364.0	364.0	27.0
LM2903QDR	SOIC	D	8	2500	367.0	367.0	35.0
LM2903QDRG4	SOIC	D	8	2500	367.0	367.0	35.0
LM2903VQPWRG4	TSSOP	PW	8	2000	367.0	367.0	35.0
LM293ADGKR	VSSOP	DGK	8	2500	364.0	364.0	27.0
LM293ADR	SOIC	D	8	2500	340.5	338.1	20.6
LM293ADR	SOIC	D	8	2500	367.0	367.0	35.0
LM293ADRG4	SOIC	D	8	2500	340.5	338.1	20.6
LM293ADRG4	SOIC	D	8	2500	367.0	367.0	35.0
LM293DGKR	VSSOP	DGK	8	2500	364.0	364.0	27.0
LM293DR	SOIC	D	8	2500	340.5	338.1	20.6
LM293DR	SOIC	D	8	2500	367.0	367.0	35.0
LM293DRG4	SOIC	D	8	2500	367.0	367.0	35.0
LM293DRG4	SOIC	D	8	2500	340.5	338.1	20.6
LM393ADGKR	VSSOP	DGK	8	2500	364.0	364.0	27.0
LM393ADR	SOIC	D	8	2500	340.5	338.1	20.6
LM393ADR	SOIC	D	8	2500	367.0	367.0	35.0
LM393ADRG4	SOIC	D	8	2500	340.5	338.1	20.6
LM393ADRG4	SOIC	D	8	2500	367.0	367.0	35.0
LM393APSR	SO	PS	8	2000	367.0	367.0	38.0
LM393APWR	TSSOP	PW	8	2000	364.0	364.0	27.0
LM393DGKR	VSSOP	DGK	8	2500	364.0	364.0	27.0
LM393DR	SOIC	D	8	2500	340.5	338.1	20.6
LM393DR	SOIC	D	8	2500	367.0	367.0	35.0
LM393DRG4	SOIC	D	8	2500	340.5	338.1	20.6
LM393DRG4	SOIC	D	8	2500	367.0	367.0	35.0
LM393PSR	SO	PS	8	2000	367.0	367.0	38.0
LM393PWR	TSSOP	PW	8	2000	364.0	364.0	27.0
LM393PWRG3	TSSOP	PW	8	2000	364.0	364.0	27.0

MCER001A – JANUARY 1995 – REVISED JANUARY 1997

JG (R-GDIP-T8) **CERAMIC DUAL-IN-LINE**

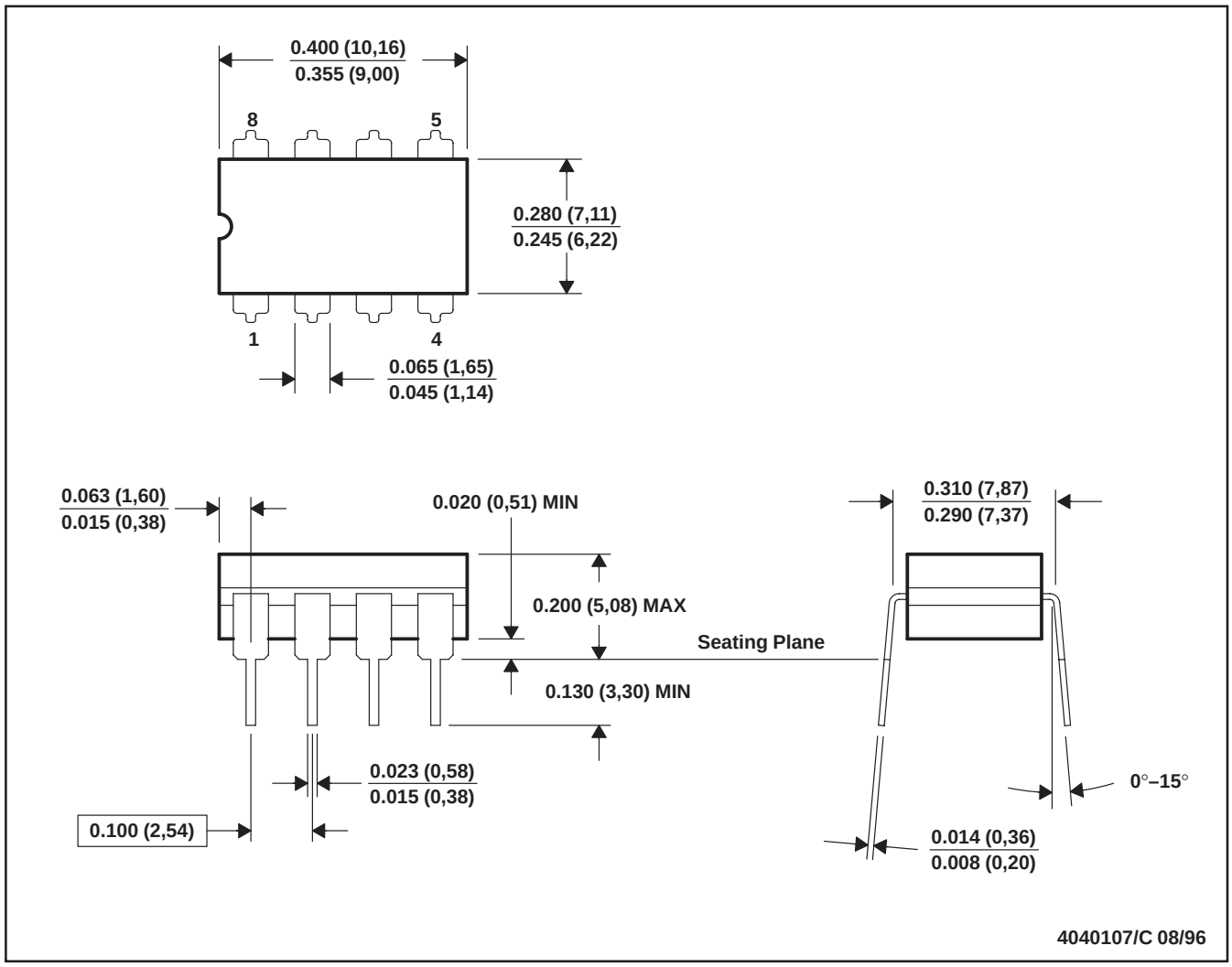

NOTES: A. All linear dimensions are in inches (millimeters).
B. This drawing is subject to change without notice.
C. This package can be hermetically sealed with a ceramic lid using glass frit.
D. Index point is provided on cap for terminal identification.
E. Falls within MIL STD 1835 GDIP1-T8

FK (S–CQCC–N**) LEADLESS CERAMIC CHIP CARRIER

28 TERMINAL SHOWN

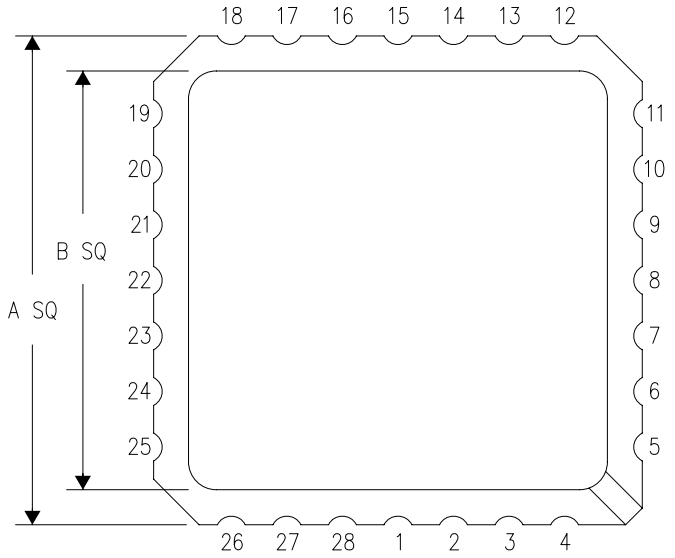

NO. OF TERMINALS **	A		B	
	MIN	MAX	MIN	MAX
20	0.342 (8,69)	0.358 (9,09)	0.307 (7,80)	0.358 (9,09)
28	0.442 (11,23)	0.458 (11,63)	0.406 (10,31)	0.458 (11,63)
44	0.640 (16,26)	0.660 (16,76)	0.495 (12,58)	0.560 (14,22)
52	0.740 (18,78)	0.761 (19,32)	0.495 (12,58)	0.560 (14,22)
68	0.938 (23,83)	0.962 (24,43)	0.850 (21,6)	0.858 (21,8)
84	1.141 (28,99)	1.165 (29,59)	1.047 (26,6)	1.063 (27,0)

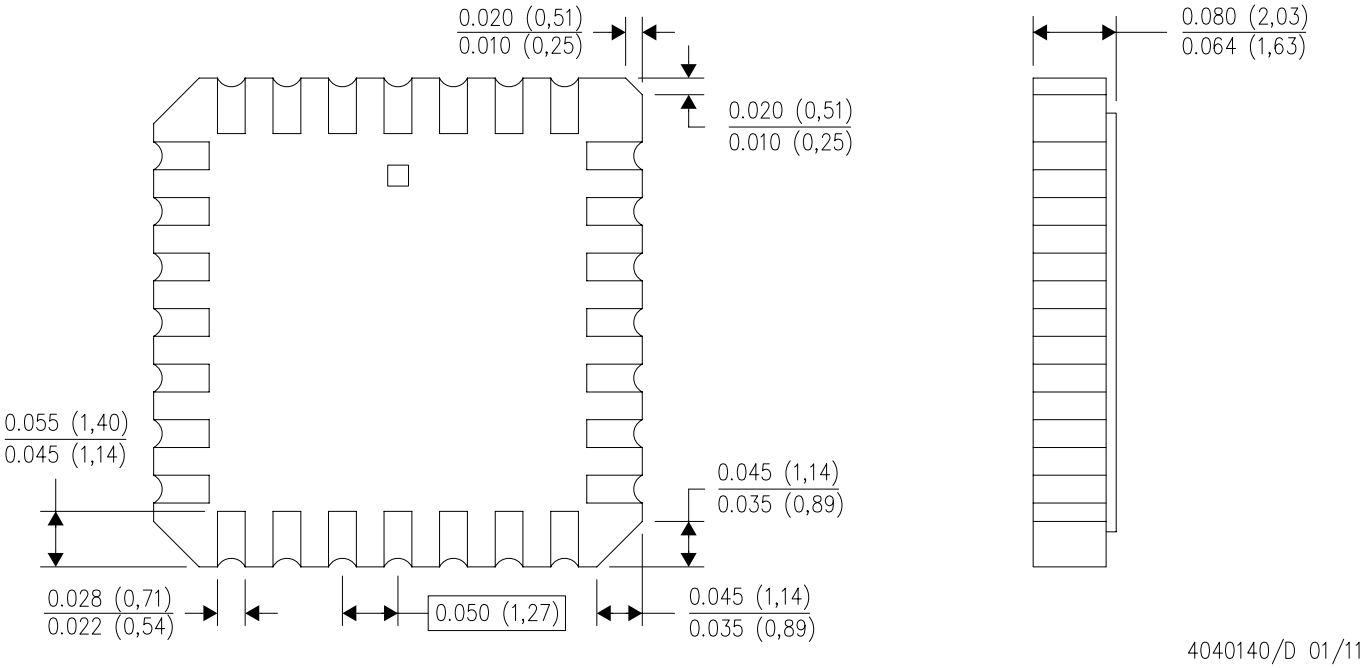

4040140/D 01/11

NOTES:
A. All linear dimensions are in inches (millimeters).
B. This drawing is subject to change without notice.
C. This package can be hermetically sealed with a metal lid.
D. Falls within JEDEC MS–004

P (R–PDIP–T8) PLASTIC DUAL–IN–LINE PACKAGE

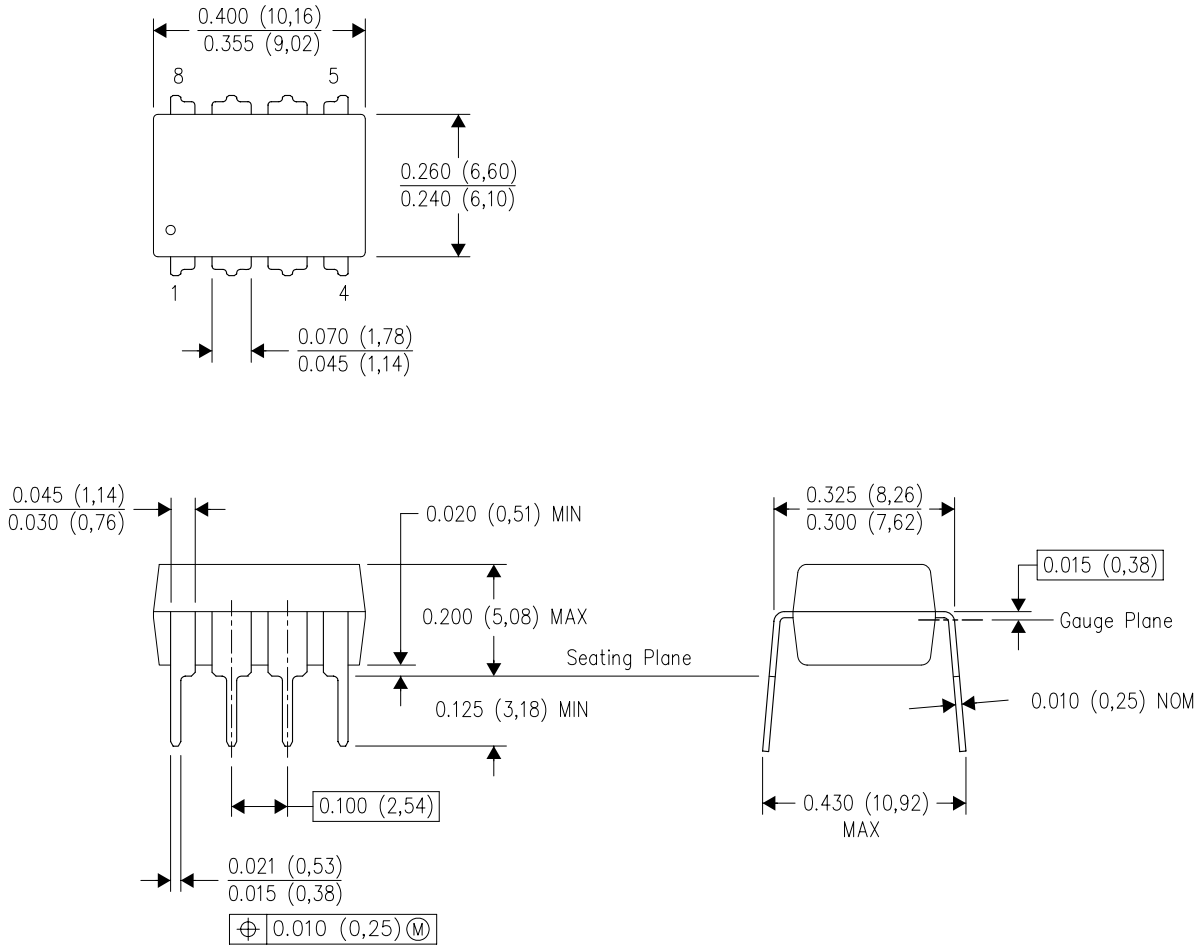

NOTES:
A. All linear dimensions are in inches (millimeters).
B. This drawing is subject to change without notice.
C. Falls within JEDEC MS–001 variation BA.

DGK (S–PDSO–G8) PLASTIC SMALL–OUTLINE PACKAGE

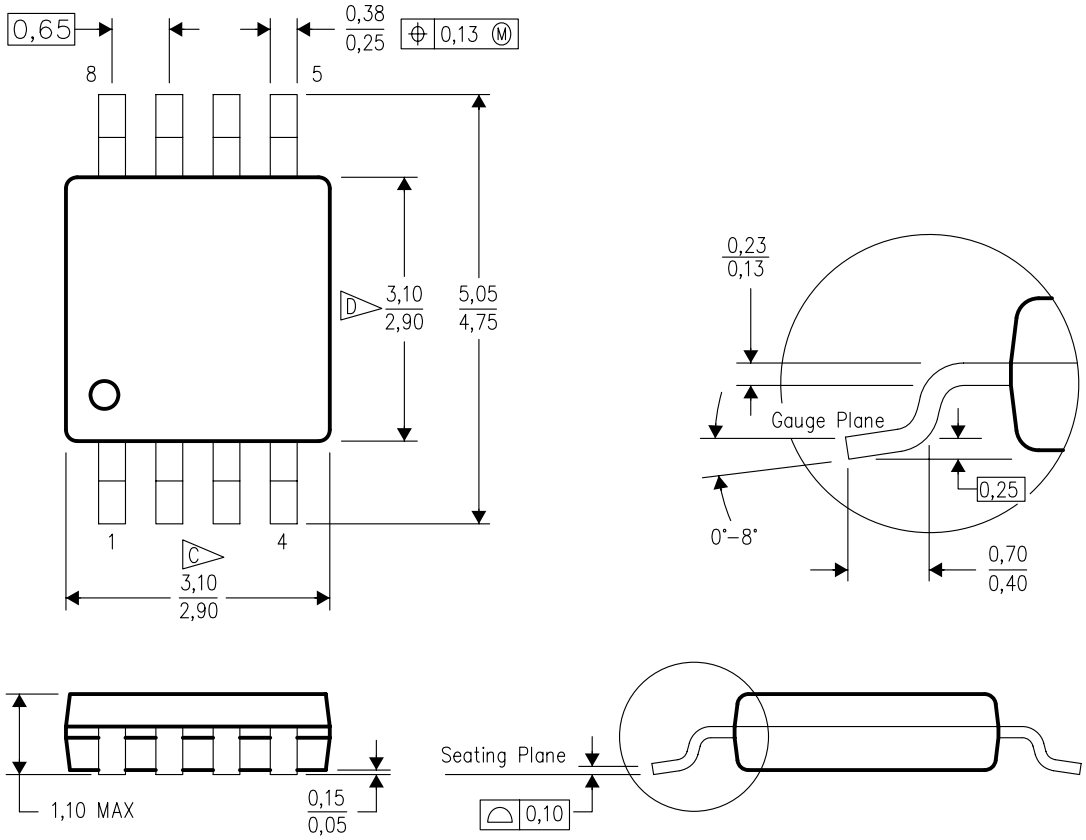

4073329/E 05/06

NOTES:
A. All linear dimensions are in millimeters.
B. This drawing is subject to change without notice.
C. Body length does not include mold flash, protrusions, or gate burrs. Mold flash, protrusions, or gate burrs shall not exceed 0.15 per end.
D. Body width does not include interlead flash. Interlead flash shall not exceed 0.50 per side.
E. Falls within JEDEC MO–187 variation AA, except interlead flash.

D (R–PDSO–G8) PLASTIC SMALL OUTLINE

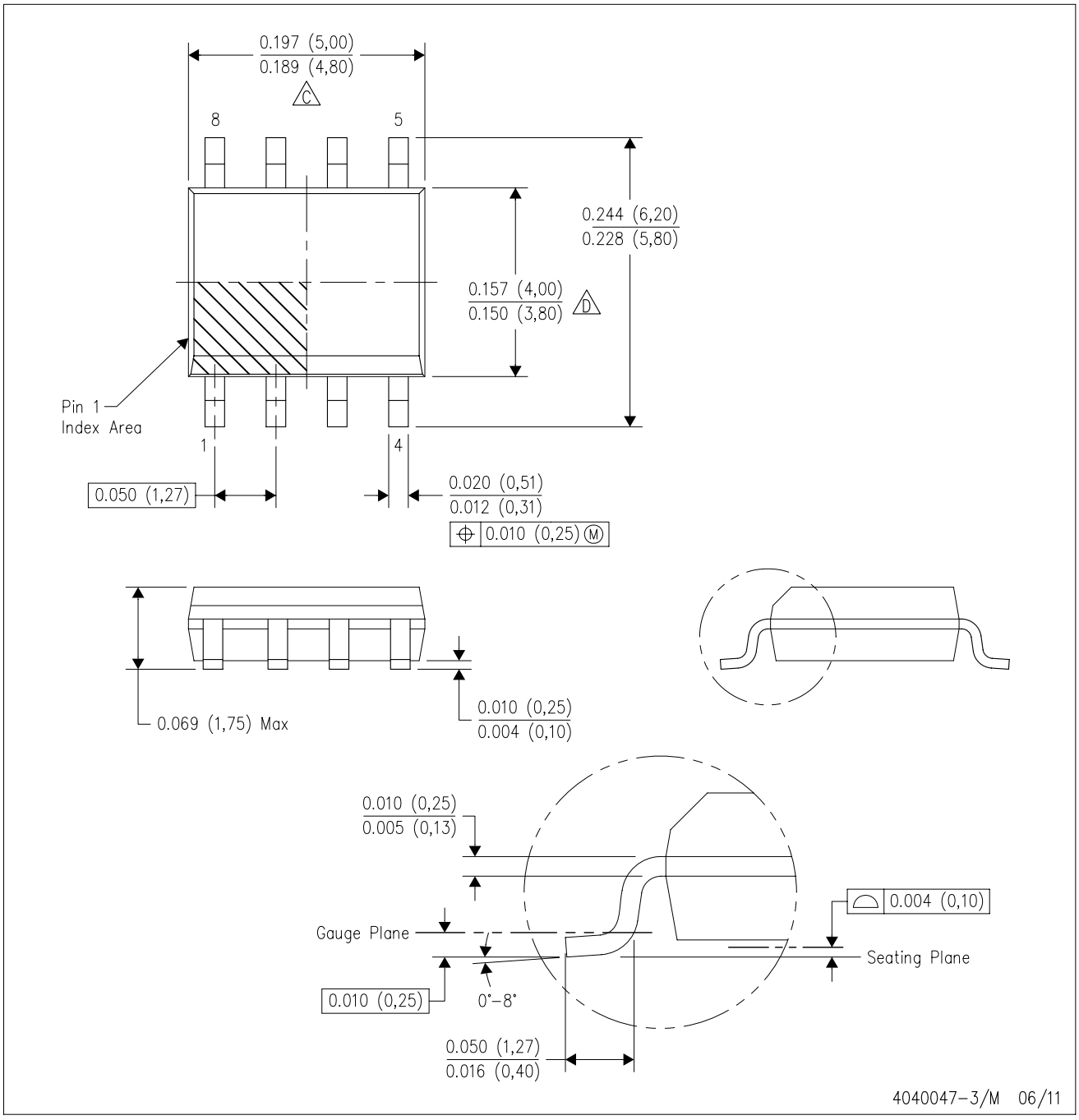

NOTES:
A. All linear dimensions are in inches (millimeters).
B. This drawing is subject to change without notice.
C. Body length does not include mold flash, protrusions, or gate burrs. Mold flash, protrusions, or gate burrs shall not exceed 0.006 (0,15) each side.
D. Body width does not include interlead flash. Interlead flash shall not exceed 0.017 (0,43) each side.
E. Reference JEDEC MS–012 variation AA.

D (R–PDSO–G8) PLASTIC SMALL OUTLINE

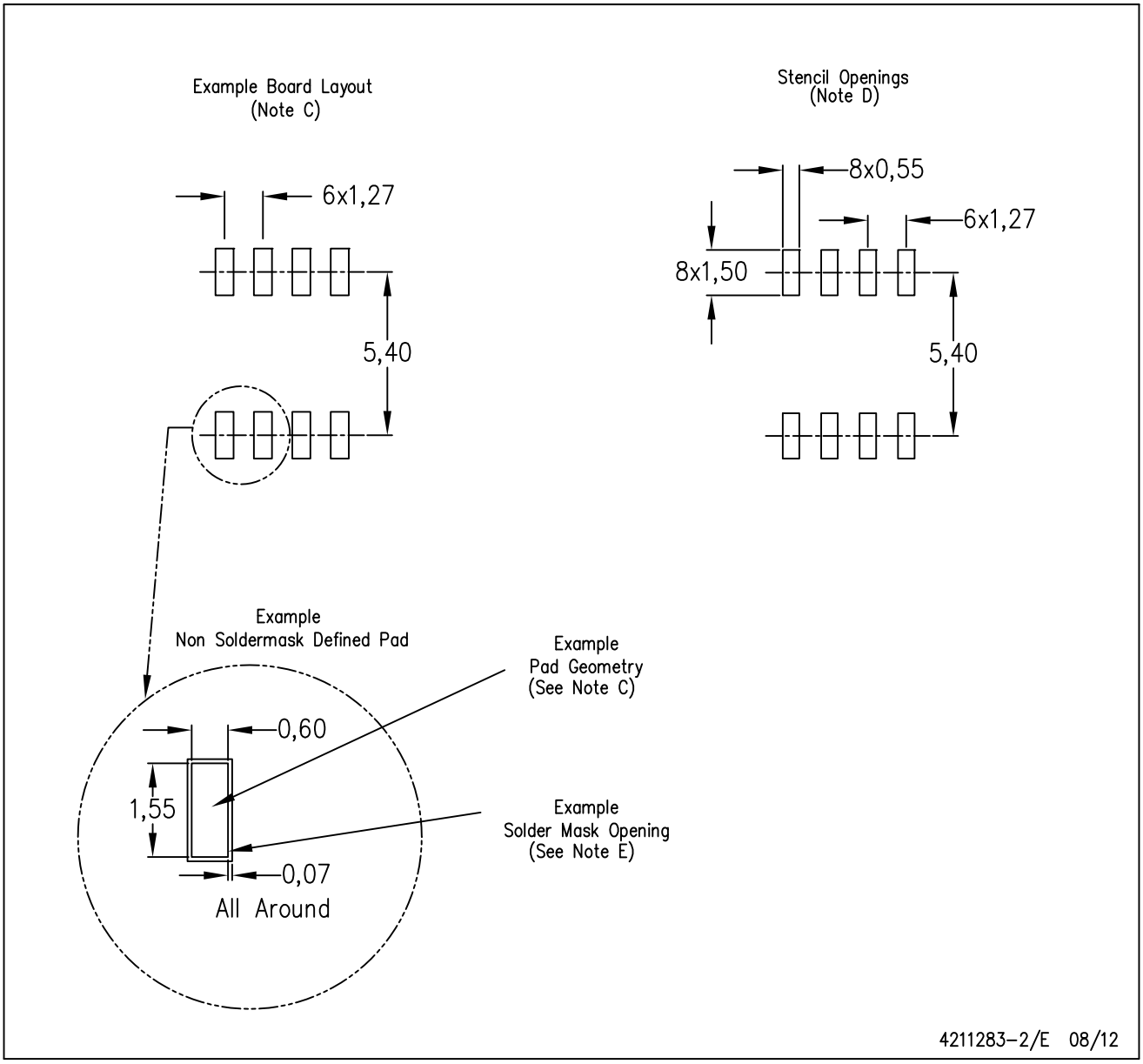

NOTES:
A. All linear dimensions are in millimeters.
B. This drawing is subject to change without notice.
C. Publication IPC–7351 is recommended for alternate designs.
D. Laser cutting apertures with trapezoidal walls and also rounding corners will offer better paste release. Customers should contact their board assembly site for stencil design recommendations. Refer to IPC–7525 for other stencil recommendations.
E. Customers should contact their board fabrication site for solder mask tolerances between and around signal pads.

MECHANICAL DATA

PS (R-PDSO-G8) **PLASTIC SMALL-OUTLINE PACKAGE**

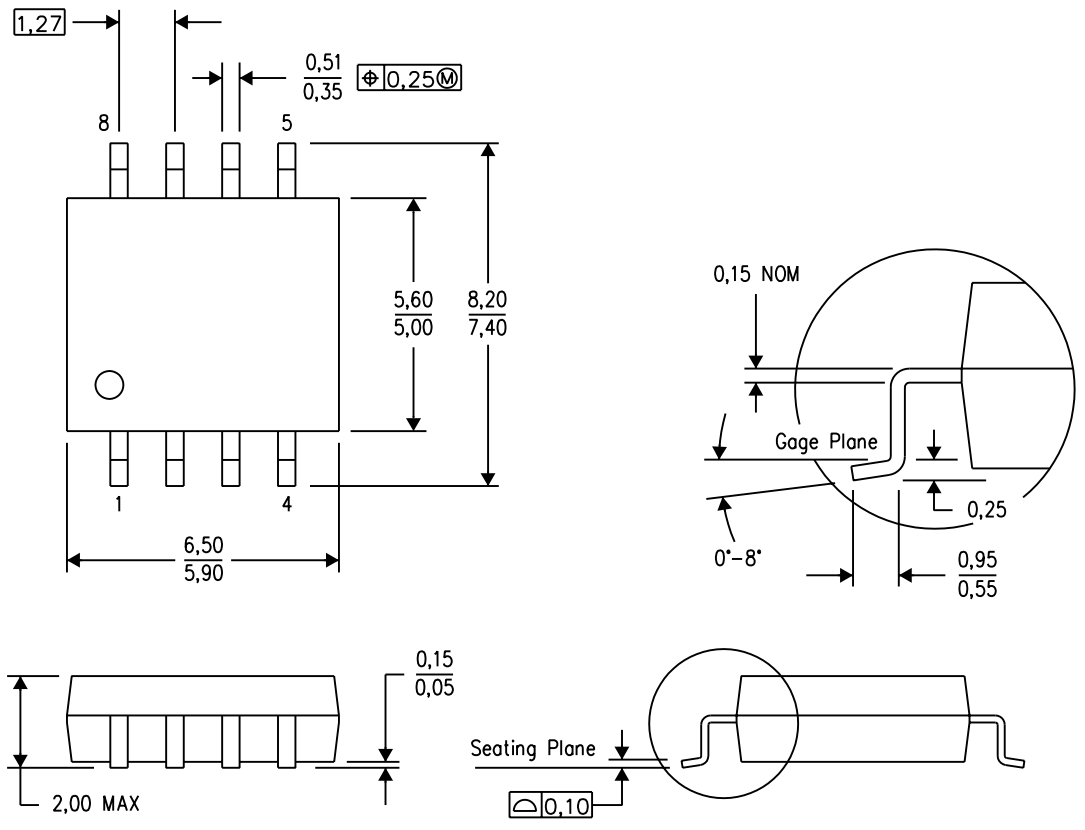

4040063/C 03/03

NOTES:
A. All linear dimensions are in millimeters.
B. This drawing is subject to change without notice.
C. Body dimensions do not include mold flash or protrusion, not to exceed 0,15.

PS (R–PDSO–G8) PLASTIC SMALL OUTLINE

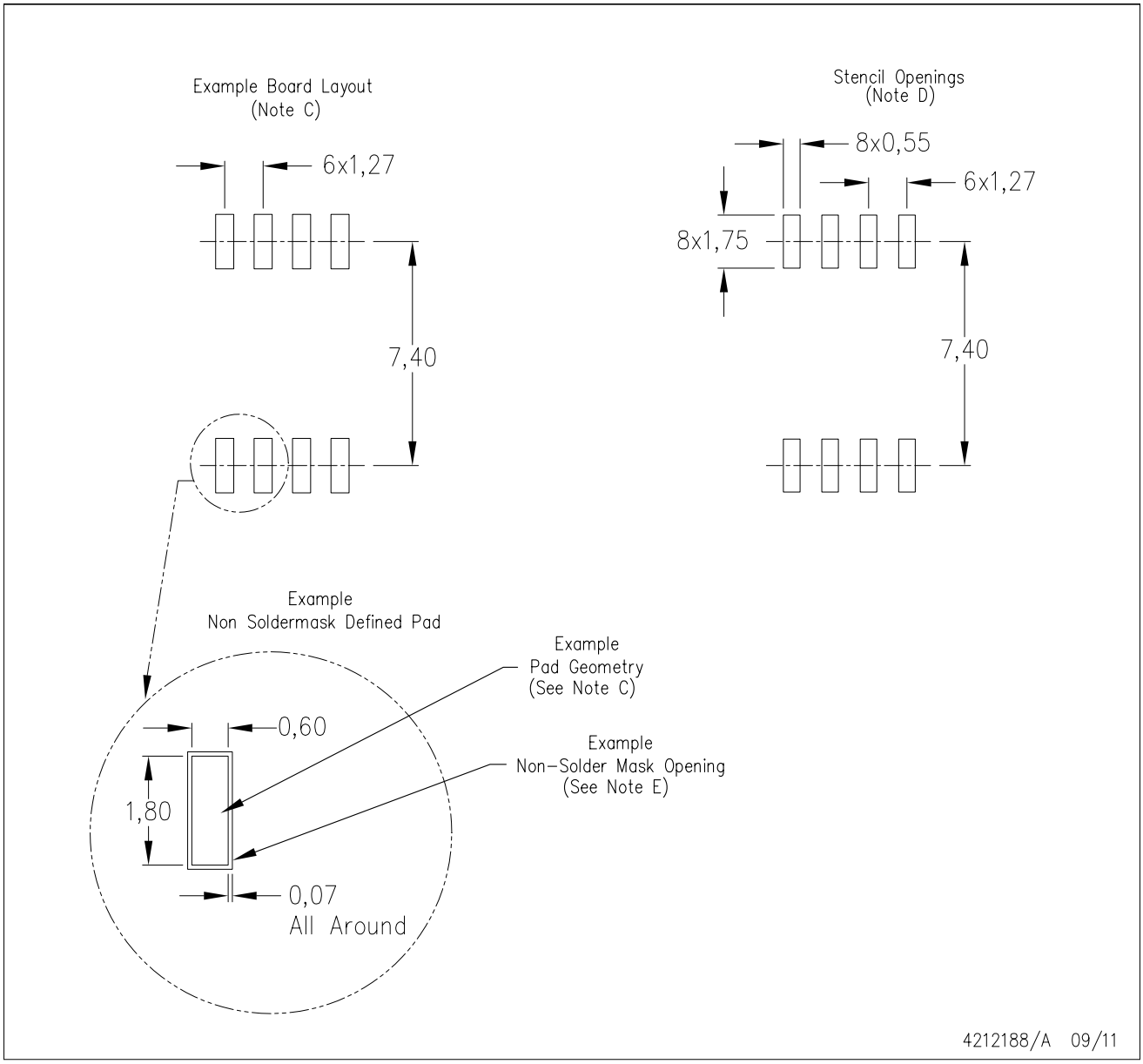

NOTES:
A. All linear dimensions are in millimeters.
B. This drawing is subject to change without notice.
C. Publication IPC–7351 is recommended for alternate designs.
D. Laser cutting apertures with trapezoidal walls and also rounding corners will offer better paste release. Customers should contact their board assembly site for stencil design recommendations. Refer to IPC–7525 for other stencil recommendations.
E. Customers should contact their board fabrication site for solder mask tolerances between and around signal pads.

PW (R–PDSO–G8) PLASTIC SMALL OUTLINE

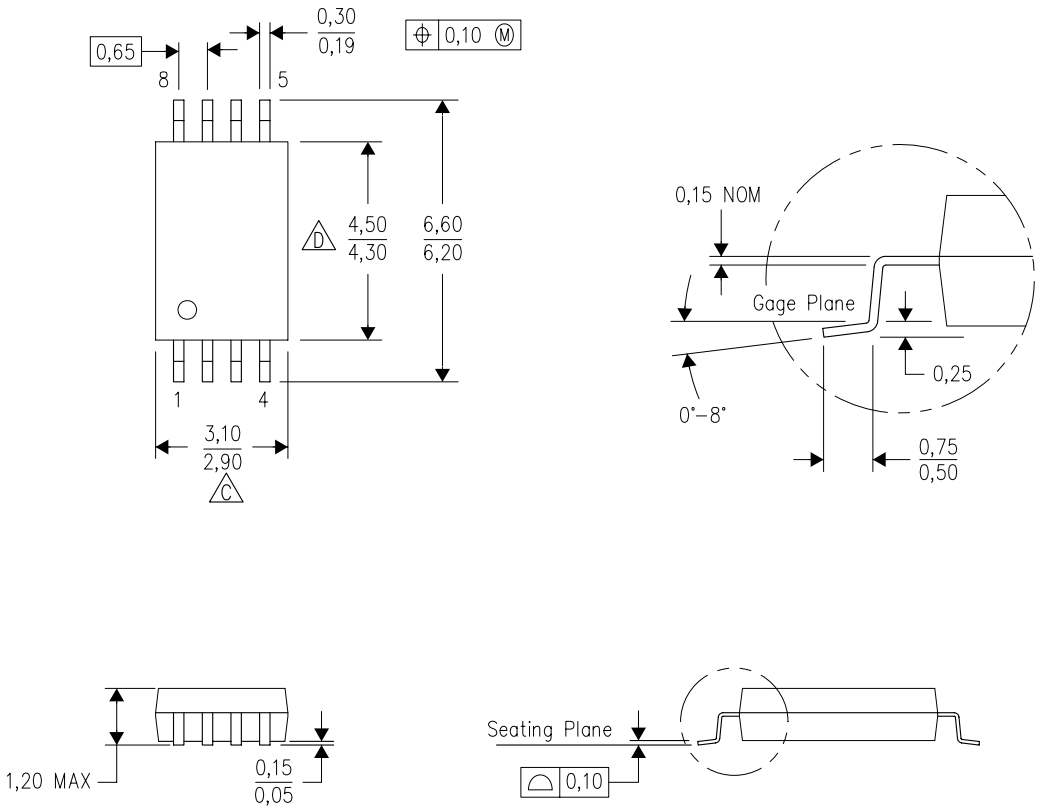

4040064–2/G 02/11

NOTES:
A. All linear dimensions are in millimeters. Dimensioning and tolerancing per ASME Y14.5M–1994.
B. This drawing is subject to change without notice.
C. Body length does not include mold flash, protrusions, or gate burrs. Mold flash, protrusions, or gate burrs shall not exceed 0,15 each side.
D. Body width does not include interlead flash. Interlead flash shall not exceed 0,25 each side.
E. Falls within JEDEC MO–153

IMPORTANT NOTICE

Texas Instruments Incorporated and its subsidiaries (TI) reserve the right to make corrections, enhancements, improvements and other changes to its semiconductor products and services per JESD46, latest issue, and to discontinue any product or service per JESD48, latest issue. Buyers should obtain the latest relevant information before placing orders and should verify that such information is current and complete. All semiconductor products (also referred to herein as “components”) are sold subject to TI’s terms and conditions of sale supplied at the time of order acknowledgment.

TI warrants performance of its components to the specifications applicable at the time of sale, in accordance with the warranty in TI’s terms and conditions of sale of semiconductor products. Testing and other quality control techniques are used to the extent TI deems necessary to support this warranty. Except where mandated by applicable law, testing of all parameters of each component is not necessarily performed.

TI assumes no liability for applications assistance or the design of Buyers’ products. Buyers are responsible for their products and applications using TI components. To minimize the risks associated with Buyers’ products and applications, Buyers should provide adequate design and operating safeguards.

TI does not warrant or represent that any license, either express or implied, is granted under any patent right, copyright, mask work right, or other intellectual property right relating to any combination, machine, or process in which TI components or services are used. Information published by TI regarding third-party products or services does not constitute a license to use such products or services or a warranty or endorsement thereof. Use of such information may require a license from a third party under the patents or other intellectual property of the third party, or a license from TI under the patents or other intellectual property of TI.

Reproduction of significant portions of TI information in TI data books or data sheets is permissible only if reproduction is without alteration and is accompanied by all associated warranties, conditions, limitations, and notices. TI is not responsible or liable for such altered documentation. Information of third parties may be subject to additional restrictions.

Resale of TI components or services with statements different from or beyond the parameters stated by TI for that component or service voids all express and any implied warranties for the associated TI component or service and is an unfair and deceptive business practice. TI is not responsible or liable for any such statements.

Buyer acknowledges and agrees that it is solely responsible for compliance with all legal, regulatory and safety-related requirements concerning its products, and any use of TI components in its applications, notwithstanding any applications-related information or support that may be provided by TI. Buyer represents and agrees that it has all the necessary expertise to create and implement safeguards which anticipate dangerous consequences of failures, monitor failures and their consequences, lessen the likelihood of failures that might cause harm and take appropriate remedial actions. Buyer will fully indemnify TI and its representatives against any damages arising out of the use of any TI components in safety-critical applications.

In some cases, TI components may be promoted specifically to facilitate safety-related applications. With such components, TI’s goal is to help enable customers to design and create their own end-product solutions that meet applicable functional safety standards and requirements. Nonetheless, such components are subject to these terms.

No TI components are authorized for use in FDA Class III (or similar life-critical medical equipment) unless authorized officers of the parties have executed a special agreement specifically governing such use.

Only those TI components which TI has specifically designated as military grade or “enhanced plastic” are designed and intended for use in military/aerospace applications or environments. Buyer acknowledges and agrees that any military or aerospace use of TI components which have ***not*** been so designated is solely at the Buyer's risk, and that Buyer is solely responsible for compliance with all legal and regulatory requirements in connection with such use.

TI has specifically designated certain components as meeting ISO/TS16949 requirements, mainly for automotive use. In any case of use of non-designated products, TI will not be responsible for any failure to meet ISO/TS16949.

Products		**Applications**	
Audio	www.ti.com/audio	Automotive and Transportation	www.ti.com/automotive
Amplifiers	amplifier.ti.com	Communications and Telecom	www.ti.com/communications
Data Converters	dataconverter.ti.com	Computers and Peripherals	www.ti.com/computers
DLP® Products	www.dlp.com	Consumer Electronics	www.ti.com/consumer-apps
DSP	dsp.ti.com	Energy and Lighting	www.ti.com/energy
Clocks and Timers	www.ti.com/clocks	Industrial	www.ti.com/industrial
Interface	interface.ti.com	Medical	www.ti.com/medical
Logic	logic.ti.com	Security	www.ti.com/security
Power Mgmt	power.ti.com	Space, Avionics and Defense	www.ti.com/space-avionics-defense
Microcontrollers	microcontroller.ti.com	Video and Imaging	www.ti.com/video
RFID	www.ti-rfid.com		
OMAP Applications Processors	www.ti.com/omap	**TI E2E Community**	e2e.ti.com
Wireless Connectivity	www.ti.com/wirelessconnectivity		

Mailing Address: Texas Instruments, Post Office Box 655303, Dallas, Texas 75265
Copyright © 2013, Texas Instruments Incorporated

Общество с ограниченной ответственностью «МосЧип» ИНН 7719860671 / КПП 771901001
Адрес: 105318, г.Москва, ул.Щербаковская д.3, офис 1107

Данный компонент на территории Российской Федерации

Вы можете приобрести в компании MosChip.

Для оперативного оформления запроса Вам необходимо перейти по данной ссылке:

http://moschip.ru/get-element

Вы можете разместить у нас заказ для любого Вашего проекта, будь то серийное производство или разработка единичного прибора.

В нашем ассортименте представлены ведущие мировые производители активных и пассивных электронных компонентов.

Нашей специализацией является поставка электронной компонентной базы двойного назначения, продукции таких производителей как XILINX, Intel (ex.ALTERA), Vicor, Microchip, Texas Instruments, Analog Devices, Mini-Circuits, Amphenol, Glenair.

Сотрудничество с глобальными дистрибьюторами электронных компонентов, предоставляет возможность заказывать и получать с международных складов практически любой перечень компонентов в оптимальные для Вас сроки.

На всех этапах разработки и производства наши партнеры могут получить квалифицированную поддержку опытных инженеров.

Система менеджмента качества компании отвечает требованиям в соответствии с ГОСТ Р ИСО 9001, ГОСТ РВ 0015-002 и ЭС РД 009

Офис по работе с юридическими лицами:

105318, г.Москва, ул.Щербаковская д.3, офис 1107, 1118, ДЦ «Щербаковский»

Телефон: +7 495 668-12-70 (многоканальный)

Факс: +7 495 668-12-70 (доб.304)

E-mail: info@moschip.ru

Skype отдела продаж:
moschip.ru
moschip.ru_4
moschip.ru_6
moschip.ru_9