FEDL620Q504H-01
Issue Date: Aug. 31, 2015

ML620Q503H/Q504H

Ultra Low Power 16-bit Microcontroller

GENERAL DESCRIPTION

This LSI family is a high-performance 16-bit CMOS microcontroller into which rich peripheral circuits, such as synchronous serial port, UART, I^2C bus interface (master), supply voltage level detect circuit, RC oscillation type A/D converter, and successive approximation type A/D converter are incorporated around 16-bit CPU nX-U16/100.
The CPU nX-U16/100 is capable of efficient instruction execution in 1-instruction 1-clock mode by 3-stage pipe line architecture parallel processing. The Flash ROM that is installed as program memory achieves low-voltage low-power consumption operation (read operation) is most suitable for battery-driven applications. And, this LSI has a data flash-memory fill area by a software which can be written in.
The on-chip debug function that is installed enables program debugging and programming.

FEATURES

- CPU
  - 16-bit RISC CPU (CPU name: nX-U16/100)
  - Instruction system: 16-bit instructions
  - Instruction set: Transfer, arithmetic operations, comparison, logic operations, multiplication/division, bit manipulations, bit logic operations, jump, conditional jump, call return stack manipulations, arithmetic shift, and so on
  - Build-in On-Chip debug function
  - Minimum instruction execution time
    30.5 µs (@32.768 kHz system clock)
    62.5ns (@16 MHz system clock)

- Built-in coprocessor for multiplication, division, and multiply-accumulate operations
  - Signed or unsigned operation setting
  - Multiplication: 16bit × 16bit (operation time 4 cycles)
  - Division: 32bit / 16bit (operation time 8 cycles)
  - Division: 32bit / 32bit (operation time 16 cycles)
  - Multiply-accumulate (non-saturating): 16bit × 16bit + 32bit (operation time 4 cycles)
  - Multiply-accumulate (saturating): 16bit × 16bit + 32bit (operation time 4 cycles)

- Internal memory
  - Supports ISP function (re-writing the program memory area by software)
  - Number of segments

Product name	Flash memory		SRAM
	Program area*	Data area	
ML620Q503H	32KB (16K × 16bit)	2KB (1K × 16bit)	2KB (1K × 16bit)
ML620Q504H	64KB (32K × 16bit)	2KB (1K × 16bit)	6KB (3K × 16bit)

*: including 1KB of unusable test area

- Interrupt controller (INTC)
  - 1 non-maskable interrupt sources (Internal source: 1)
  - 37 maskable interrupt sources (Internal sources: 29, External sources: 8)
  - Software interrupt (SWI): maximum 64 sources
  - External interrupts and comparator allow edge selection and sampling selection
  - Priority level (4-level) can be set for each interrupt

- Time base counter (TBC)
  - Low-speed time base counter ×1 channel

- Timers (TMR)
  – 8 bits × 8 channels
    (Timer0-7: 16-bit × 4 configuration available by using Timer0-1 or Timer2-3, Timer4-5, Timer6-7)
  – Selection of one shot timer mode is possible
  – External clock can be selected as timer clock.

- Function Timers (FTM)
  – 16-bit × 4 channels
  – Equipped with the timer/capture/PWM functions using a 16-bit counter
  – Timer start/stop function by software/event trriger(external pin or other timer)
  – External pin can be selected as counter clock
  – Capture function (the measurement such as the pulse width is possible using external trigger input)
  – Two types of PWM with the same period and different duties and complementary PWM with the dead time set can be output.

- Watchdog timer (WDT)
  – Non-maskable interrupt and reset
  – Free running
  – Overflow period: 4 types selectable (125ms, 500ms, 2s, and 8s when LSCLK = 32.768 kHz)

- Synchronous serial port (SSIOF/SSIO)
  – without FIFOs (SSIO) : 1 channel
  – with 4-byte transmits and receives FIFOs (SSIOF) : 1 channel
  – Master/slave are selectable
  – LSB first/MSB first are selectable
  – 8-bit length/16-bit length are selectable
  – Phase/Polarity of clock are selectable
  – supports slave-select signal (only SSIOF)

- UART (UARTF/UART)
  – without FIFOs (UART) : 1ch
  – with 4-byte transmits and receives FIFOs (UARTF) : 1ch
  – Full duplex buffer system
  – Communication speed: Settable within the range of 2400bps to 115200bps.
  – Programmable interface (data length, parity, stop bits selectable)

- I^2C bus interface (I^2C)
  – Master function × 2 channel
  – Fast mode (400 kbps), standard mode (100 kbps)

- General-purpose ports (PORT)
  – Input port × 2, Input/output port × 36 channels

- Melody driver (MELODY)
  – Tempo: 15 types
  – Scale: 29 types (Melody sound frequency: 508 Hz to 10.922 kHz)
  – Tone length: 63 types
  – Buzzer output mode (4 output modes, 8 buzzer frequencies, 7duty levels at 4.096kHz /15 duty levels at other buzzer frequencies)

- RC oscillation type A/D converter (RC-ADC)
  – Time division × 2 channels
  – 24-bit counter

- Successive approximation type A/D converter (SA-ADC)
  - Input × 12 channels
  - 12-bit A/D converter
  - Starting by trigger of Timer/FTM function.
  - Capacitive touch sense function

- Analog Comparator (CMP)
  - Input × 2ch
  - Common mode input voltage: 0.2V to V_{DD}－0.2V
  - Input offset voltage: 30mV(max)
  - Interrupt allow edge selection and sampling selection are selectable

- Voltage Level Supervisor (VLS)
  - Threshold voltages: selectable from 13 levels
  - interrupt or reset generate are selectable

- Low Level Detector(LLD)
  - Judgement Voltage: 1.8V±0.2V
  - Usable as low level detection reset

- Reset
  - Reset by the RESET_N pin
  - Reset by power-on detection
  - Reset by overflow of watchdog timer (WDT)
  - Reset by Voltage Leve Supervisor(VLS)
  - Reset by Low Level Detector(LLD)

- Clock
  - Low-speed clock: (This LSI can not guarantee the operation without low-speed clock)
    - Crystal oscillation (32.768 kHz)
    - External clock input (30kHz to 36kHz)
    - Built-in RC oscillation (32.768kHz)
  - High-speed clock:
    - Crystal/Ceramic oscillation (16 MHz)
    - External clock input (300kHz to 16 MHz)
    - Built-in RC oscillation (16MHz)

- Power management
  - HALT mode: Instruction execution by CPU is suspended. All peripheral circuits can keep in operating states.
  - HALT-H mode: Instruction execution by CPU is suspended. Stop of high-speed oscillation automatically. All peripheral circuits can keep in operating states.
  - DEEP-HALT mode: Instruction execution by CPU is suspended. Some peripheral circuits(Timer, LTB, etc.) can keep in operating states.
  - STOP mode: Stop of low-speed oscillation and high-speed oscillation (Operations of CPU and peripheral circuits are stopped.)
  - Clock gear: The frequency of high-speed system clock can be changed by software (1/1, 1/2, 1/4, 1/8,1/16,1/32 of the oscillation clock)
  - Block Control Function: Power down (reset registers and stop clock supply) the circuits of unused peripherals.

- Shipment
  - Die * Please contact our responsible sales person for the pad layout information.
  - 48-pin plastic TQFP

    Tray

    ML620Q503H-xxxTBWAAL
    ML620Q504H-xxxTBWAAL

    Tape and Reel

    ML620Q503H-xxxTBWABL
    ML620Q504H-xxxTBWABL

- Guaranteed operating range
  - Operating temperature (ambient) : –40°C to +85°C
  - Operating voltage: V_{DD} = 1.8V to 5.5V

BLOCK DIAGRAM

Block Diagram of ML620Q503H/Q504H

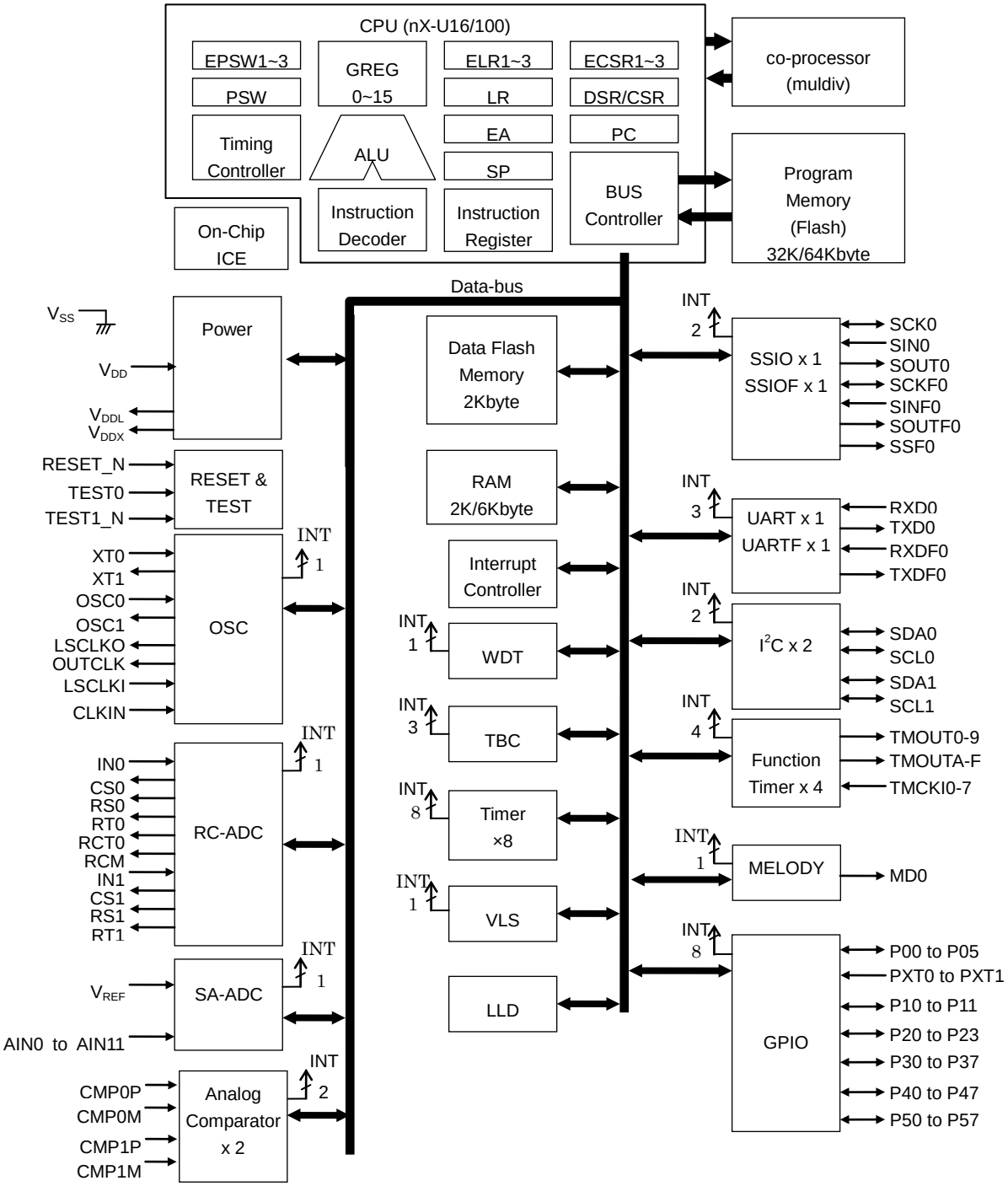

Figure 1. Block Diagram of ML620Q503H/Q504H

PIN CONFIGURATION

Pin Layout of ML620Q503H/Q504H TQFP Package

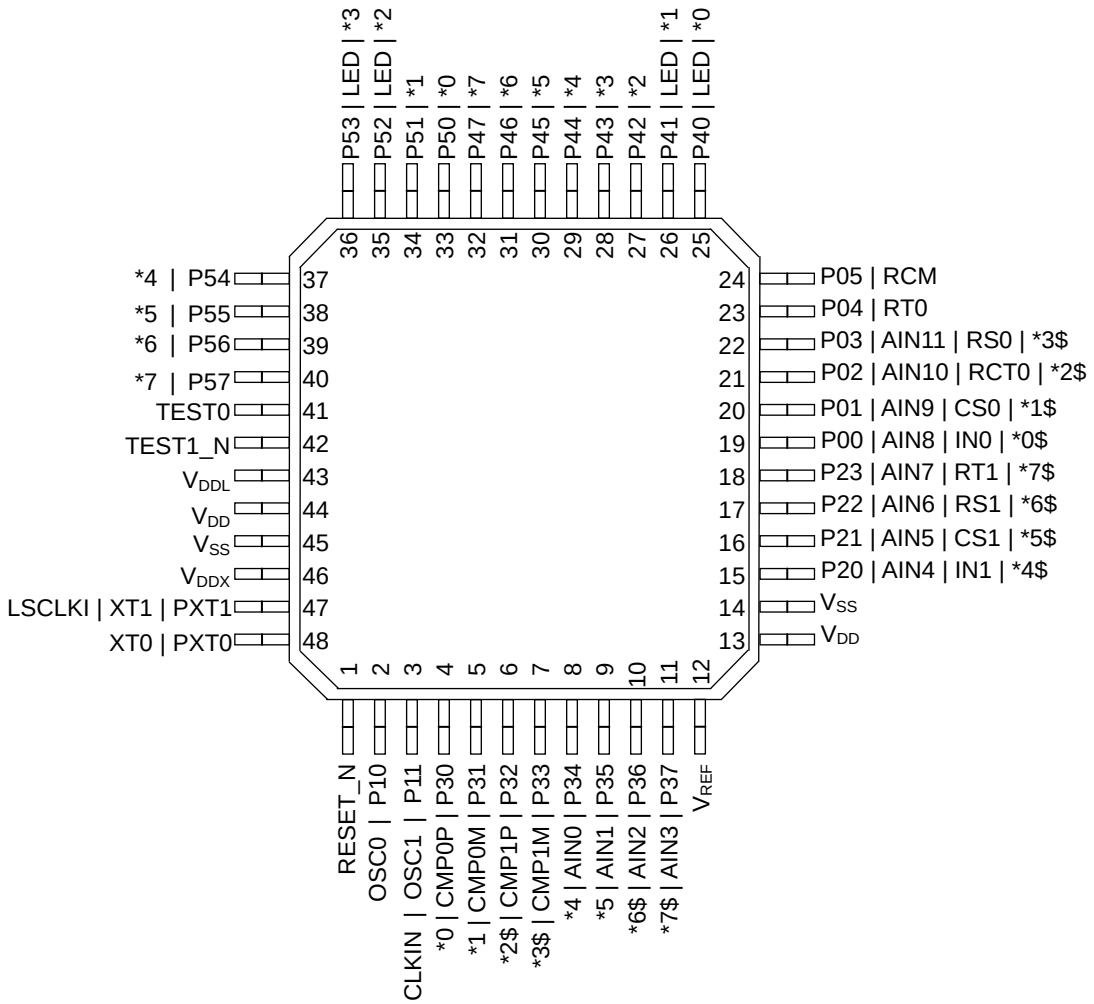

External intteruput inputpin(EXI) can be assigned to P00-P05, PXT0-1, P20-P57.
*0 to *7 and *0$ to *7$ has following functions. But 0-7 has limited function. Please refer to the pin list.

*0 : SDA0, SOUT0, RXD0	*4 : SDA1, SOUTF0, RXDF0
*1 : SCL0, SIN0 , TXD0	*5 : SCL1, SINF0, TXDF0
*2 : SCK0, TMOUT ,TMCKI	*6 : LSCLKO,SCKF0, TMOUT, TMCKI
*3 : MD0, TMOUT , TMCKI	*7 : OUTCLK,SSF0, TMOUT, TMCKI
*0$: SOUT0, RXD0	*4$: SOUTF0, RXDF0
*1$: SIN0 , TXD0	*5$: SIN F0, TXDF0
*2$: SCK0, TMOUT	*6$: SCKF0, TMOUT
*3$: MD0(P33 only), TMOUT	*7$: SSF0, TMOUT

Figure 2. Pin Layout of ML620Q503H/Q504H TQFP Package

PIN LIST

PKG Pin No.	1st Function				2nd/3rd/4th Function								
	Pin name	I/O	Reset State	Function	pin name	I/O	function	pin name	I/O	function	pin name	I/O	function
14, 45	V_{SS}	–	–	Negative power supply pin	–	–	–	–	–	–	–	–	–
13, 44	V_{DD}	–	–	Positive power supply pin	–	–	–	–	–	–	–	–	–
43	V_{DDL}	–	–	Power supply pin for internal circuit (internally generated)	–	–	–	–	–	–	–	–	–
46	V_{DDX}	–	–	Power supply pin for internal circuit (internally generated)	–	–	–	–	–	–	–	–	–
12	V_{REF}	I	–	Reference voltage input pin of SA-ADC	–	–	–	–	–	–	–	–	–
1	RESET_N	I	Pull-up Input	Reset input pin	–	–	–	–	–	–	–	–	–
42	TEST1_N	I	Pull-up Input	Input pin for testing	–	–	–	–	–	–	–	–	–
41	TEST0	I/O	Pull-down Input	Input/output pin for testing	–	–	–	–	–	–	–	–	–
48	PXT0/ EXII0/ XT0	I	Input disable	Input port/ External interrupt/ Low-speed oscillation port	–	–	–	–	–	–	–	–	–
47	PXT1/ EXI1/ XT1/ LSCLKI	I/O	Hi-Z output	Input-Output port/ External interrupt/ Low-speed oscillation port Low-speed external clock input	–	–	–	–	–	–	–	–	–
19	P00/ EXI00/ AIN8	I/O	Hi-Z output	Input-Output port/ External interrupt/ SA-ADC input	IN0	I	RC-ADC oscillation input	SOUT0	O	SSIO data output	RXD0	I	UART data input
20	P01/ EXI01/ AIN9	I/O	Hi-Z output	Input-Output port/ External interrupt/ SA-ADC input	CS0	O	RC-ADC reference capacitance connection pin	SIN0	I	SSIO data input	TXD0	O	UART data output
21	P02/ EXI02/ AIN10	I/O	Hi-Z output	Input-Output port/ External interrupt/ SA-ADC input	RCT0	O	RCADC resistor/capacitor sensor connection pin	SCK0	I/O	SSIO clock input/output	TMOUT0	O	FTM output
22	P03/ EXI03/ AIN11	I/O	Hi-Z output	Input-Output port/ External interrupt/ SA-ADC input	RS0	O	RC-ADC reference resistor connection pin	–	–	–	TMOUT1	O	FTM output
23	P04/ EXI04	I/O	Hi-Z output	Input-Output port/ External interrupt	RT0	O	RC-ADC measurement resistor sensor connection pin	–	–	–	–	–	–
24	P05/ EXI05	I/O	Hi-Z output	Input-Output port/ External interrupt	RCM	O	RC-ADC oscillation monitor	–	–	–	–	–	–
2	P10/ OSC0	I/O	Hi-Z output	Input-Output port/ High-speed oscillation port	–	–	–	–	–	–	–	–	–
3	P11/ OSC1/ CLKIN	I/O	Hi-Z output	Input-Output port/ High-speed oscillation port High-speed external clock input	–	–	–	–	–	–	–	–	–
15	P20/ EXI20/ AIN4	I/O	Hi-Z output	Input-Output port/ External interrupt/ SA-ADC input	IN1	I	RC-ADC oscillation input	SOUTF0	O	SSIOF data output	RXDF0	I	UARTF data input
16	P21/ EXI21/ AIN5	I/O	Hi-Z output	Input-Output port/ External interrupt/ SA-ADC input	CS1	O	RC-ADC reference capacitance connection pin	SINF0	I	SSIOF data input	TXDF0	O	UARTF data output
17	P22/ EXI22/ AIN6	I/O	Hi-Z output	Input-Output port/ External interrupt/ SA-ADC input	RS1	O	RC-ADC reference resistor connection pin	SCKF0	I/O	SSIOF clock input/output	TMOUT2	O	FTM output

PKG Pin No.	1st Function				2nd/3rd/4th Function								
	Pin name	I/O	Reset State	Function	pin name	I/O	function	pin name	I/O	function	pin name	I/O	function
18	P23/ EXI23/ AIN7	I/O	Hi-Z output	Input-Output port/ External interrupt/ SA-ADC input	RT1	O	RC-ADC measurement resistor sensor connection pin	SSF0	I/O	SSIOF select input/output	TMOUT3	O	FTM output
4	P30/ EXI30/ CMP0P	I/O	Hi-Z output	Input-Output port/ External interrupt/ Comparator plus input	SDA0	I/O	I^2C data input/output	SOUT0	O	SSIO data output	RXD0	I	UART data input
5	P31/ EXI31/ CMP0M	I/O	Hi-Z output	Input-Output port/ External interrupt/ Comparator minus input	SCL0	O	I^2C clock output	SIN0	I	SSIO data input	TXD0	O	UART data output
6	P32/ EXI32/ CMP1P	I/O	Hi-Z output	Input-Output port/ External interrupt/ Comparator plus input	–	–	–	SCK0	I/O	SSIO clock input/output	TMOUT4	O	FTM output
7	P33/ EXI33/ CMP1M	I/O	Hi-Z output	Input-Output port/ External interrupt/ Comparator minus input	MD0	O	Melody/Buzzer output	–	–	–	TMOUT5	O	FTM output
8	P34/ EXI34/ AIN0	I/O	Hi-Z output	Input-Output port/ External interrupt/ SA-ADC input	SDA1	I/O	I^2C data input/output	SOUTF0	O	SSIOF data output	RXDF0	I	UARTF data input
9	P35/ EXI35/ AIN1	I/O	Hi-Z output	Input-Output port/ External interrupt/ SA-ADC input	SCL1	O	I^2C clock output	SINF0	I	SSIOF data input	TXDF0	O	UARTF data output
10	P36/ EXI36/ AIN2	I/O	Hi-Z output	Input-Output port/ External interrupt/ SA-ADC input	–	–	–	SCKF0	I/O	SSIOF clock input/output	TMOUT6	O	FTM output
11	P37/ EXI37/ AIN3	I/O	Hi-Z output	Input-Output port/ External interrupt/ SA-ADC input	–	–	–	SSF0	I/O	SSIOF select input/output	TMOUT7	O	FTM output
25	P40/ EXI40/ LED	I/O	Hi-Z output	Input-Output port/ External interrupt/ LED output	SDA0	I/O	I^2C data input/output	SOUT0	O	SSIO data output	RXD0	I	UART data input
26	P41/ EXI41/ LED	I/O	Hi-Z output	Input-Output port/ External interrupt/ LED output	SCL0	O	I^2C clock output	SIN0	I	SSIO data input	TXD0	O	UART data output
27	P42/ EXI42/ TMCKI0	I/O	Hi-Z output	Input-Output port/ External interrupt/ Timer clock input	–	–	–	SCK0	I/O	SSIO clock input/output	TMOUT8	O	FTM output
28	P43/ EXI43/ TMCKI1	I/O	Hi-Z output	Input-Output port/ External interrupt/ Timer clock input	MD0	O	Melody/Buzzer output	–	–	–	TMOUT9	O	FTM output
29	P44/ EXI44	I/O	Hi-Z output	Input-Output port/ External interrupt	SDA1	I/O	I^2C data input/output	SOUTF0	O	SSIOF data output	RXDF0	I	UARTF data input
30	P45/ EXI45	I/O	Hi-Z output	Input-Output port/ External interrupt	SCL1	O	I^2C clock output	SINF0	I	SSIOF data input	TXDF0	O	UARTF data output
31	P46/ EXI46/ TMCKI2	I/O	Hi-Z output	Input-Output port/ External interrupt/ Timer clock input	LSCLKO	O	Low-speed clock output	SCKF0	I/O	SSIOF clock input/output	TMOUTA	O	FTM output
32	P47/ EXI47/ TMCKI3	I/O	Hi-Z output	Input-Output port/ External interrupt/ Timer clock input	OUTCLK	O	High-speed clock output	SSF0	I/O	SSIOF select input/output	TMOUTB	O	FTM output
33	P50/ EXI50	I/O	Hi-Z output	Input-Output port/ External interrupt	SDA0	I/O	I^2C data input/output	SOUT0	O	SSIO data output	RXD0	I	UART data input
34	P51/ EXI51	I/O	Hi-Z output	Input-Output port/ External interrupt	SCL0	O	I^2C clock output	SIN0	I	SSIO data input	TXD0	O	UART data output
35	P52/ EXI52/ TMCKI4/ LED	I/O	Hi-Z output	Input-Output port/ External interrupt/ Timer clock input/ LED output	–	–	–	SCK0	I/O	SSIO clock input/output	TMOUTC	O	FTM output
36	P53/ EXI53/ TMCKI5/ LED	I/O	Hi-Z output	Input-Output port/ External interrupt/ Timer clock input/ LED output	MD0	O	Melody/Buzzer output	–	–	–	TMOUTD	O	FTM output

PKG Pin No.	1st Function				2nd/3rd/4th Function								
	Pin name	I/O	Reset State	Function	pin name	I/O	function	pin name	I/O	function	pin name	I/O	function
37	P54/ EXI54	I/O	Hi-Z output	Input-Output port/ External interrupt	SDA1	I/O	I^2C data input/output	SOUTF0	O	SSIOF data output	RXDF0	I	UARTF data input
38	P55/ EXI55	I/O	Hi-Z output	Input-Output port/ External interrupt	SCL1	O	I^2C clock output	SINF0	I	SSIOF data input	TXDF0	O	UARTF data output
39	P56/ EXI56/ TMCKI6	I/O	Hi-Z output	Input-Output port/ External interrupt/ Timer clock input	LSCLKO	O	Low-speed clock output	SCKF0	I/O	SSIOF clock input/output	TMOUTE	O	FTM output
40	P57/ EXI57/ TMCKI7	I/O	Hi-Z output	Input-Output port/ External interrupt/ Timer clock input	OUTCLK	O	High-speed clock output	SSF0	I/O	SSIOF select input/output	TMOUTF	O	FTM output

PIN DESCRIPTION

The pin name represents the function pin name of the primary function of each terminal, The pin mode represents the set of mode register of Port Control.
(1st:primary function, 2nd:secondary function, 3rd: tertiary function, 4th: quartic function)

Pin name	I/O	Description	LSI pin name	Pin mode	Logic
System					
RESET_N	I	Reset input pin. When this pin is set to a “L” level, system reset mode is set and the internal section is initialized. When this pin is set to a “H” level subsequently, program execution starts. A pull-up resistor is internally connected.	RESET_N	—	L
XT0	I	Crystal connection pin for low-speed clock. Capacitors C_{DL} and C_{GL} are connected across this pin and V_{SS} as required.	PXT0	1st	—
XT1	O		PXT1	1st	—
LSCLKI	I	External clock input for Low-speed clock.	PXT1	1st	—
OSC0	I	Crystal/ceramic connection pin for high-speed clock (16 MHz max.). Capacitors C_{DH} and C_{GH} are connected across this pin and V_{SS}.	P10	1st	—
OSC1	O		P11	1st	—
CLKIN	I	External clock input for High-speed clock.	P11	1st	—
LSCLKO	O	Low-speed clock output pin.	P46,P56	2nd	—
OUTCLK	O	High-speed clock output pin.	P47,P57	2nd	—
General-purpose input/output port					
PXT0-PXT1	I	General-purpose input port(without pull-up/pull-down resister).	PXT0-PXT1	1st	—
P00-P05	I/O	General-purpose input/output port.	P00-P05	1st	—
P10-P11	I/O	General-purpose input/output port.	P10-P11	1st	—
P20-P23	I/O	General-purpose input/output port.	P20-P23	1st	—
P30-P37	I/O	General-purpose input/output port.	P30-P37	1st	—
P40-P47	I/O	General-purpose input/output port.	P40-P47	1st	—
P50-P57	I/O	General-purpose input/output port.	P50-P57	1st	—
External interrupt					
EXII0-EXII1 EXI00-05 EXI20-23 EXI30-37 EXI40-47 EXI50-57	I	External maskable interrupt input pins. It is possible, for each bit, to specify whether the interrupt is enabled and select the interrupt edge by software.	PXT0-PXT1 P00-P05 P20-P23 P30-P37 P40-P47 P50-P57	1st	H/L
LED					
LED	O	N-channel open drain output pins to drive LED.	P40,P41,P52,P53	1st	—
Melody/Buzzer					
MD0	—	Melody/buzzer signal output pin.	P33,P43,P53	2nd	H
UART					
TXD0	O	UART0 data output pin.	P01,P31,P41,P51	4th	—
RXD0	I	UART0 data input pin.	P00,P30,P40,P50	4th	—
TXDF0	O	UART with FIFO data output pin.	P21,P35,P45,P55	4th	—
RXDF0	I	UART with FIFO data input pin.	P20,P34,P44,P54	4th	—

Pin name	I/O	Description	LSI pin name	Pin mode	Logic
I^2C bus interface					
SDA0	I/O	I^2C0 data input/output pin. This pin has an NMOS open drain output. When using this pin as a function of the I^2C, externally connect a pull-up resistor.	P30,P40,P50	2nd	—
SCL0	O	I^2C0 clock output pin. This pin has an NMOS open drain output. When using this pin as a function of the I^2C, externally connect a pull-up resistor.	P31,P41,P51	2nd	—
SDA1	I/O	I^2C1 data input/output pin. This pin has an NMOS open drain output. When using this pin as a function of the I^2C, externally connect a pull-up resistor.	P34,P44,P54	2nd	—
SCL1	O	I^2C1 clock output pin. This pin has an NMOS open drain output. When using this pin as a function of the I^2C, externally connect a pull-up resistor.	P35,P45,P55	2nd	—
Synchronous serial					
SCK0	I/O	Synchronous serial(SSIO) clock input/output pin.	P02,P32,P42,P52	3rd	—
SIN0	I	Synchronous serial(SSIO) data input pin.	P01,P31,P41,P51	3rd	—
SOUT0	O	Synchronous serial(SSIO) data output pin.	P00,P30,P40,P50	3rd	—
SCKF0	I/O	Synchronous serial with FIFO(SSIOF) clock input/output pin.	P22,P36,P46,P56	3rd	—
SINF0	I	Synchronous serial with FIFO(SSIOF) data input pin.	P21,P35,P45,P55	3rd	—
SOUTF0	O	Synchronous serial with FIFO(SSIOF) data output pin.	P20,P34,P44,P54	3rd	—
SSF0	I/O	Synchronous serial with FIFO(SSIOF) select input/output pin.	P23,P37,P47,P57	3rd	L
FTM					
TMOUT0-9 TMOUTA-F	O	FTM output pin.	P02,P03,P22,P23 P32,P33,P36,P37, P42,P43,P46,P47 P52,P53,P56,P57	4th	—
TMCKI0-7	I	External clock input pin for FTM	P42,P43,P46,P47, P52,P53,P56,P57	1st	—
RC oscillation type A/D converter					
IN0	I	Channel 0 oscillation input pin.	P00	2nd	—
CS0	O	Channel 0 reference capacitor connection pin.	P01	2nd	—
RS0	O	Reference resistor connection pin of Channel 0.	P03	2nd	—
RT0	O	Resistor sensor connection pin of Channel 0 for measurement.	P04	2nd	—
RCT0	O	Resistor/capacitor sensor connection pin of Channel 0 for measurement.	P02	2nd	—
RCM	O	RC oscillation monitor pin.	P05	2nd	—
IN1	I	Oscillation input pin of Channel 1.	P20	2nd	—
CS1	O	Reference capacitor connection pin of Channel 1.	P21	2nd	—
RS1	O	Reference resistor connection pin of Channel 1.	P22	2nd	—
RT1	O	Resistor sensor connection pin for measurement of Channel 1.	P23	2nd	—

Pin name	I/O	Description	LSI pin name	Pin mode	Logic
Successive approximation type A/D converter					
V_{REF}	I	Reference voltage input pin for successive approximation type A/D converter.	V_{REF}	—	—
AIN0-11	I	Channel 0 analog input for successive approximation type A/D converter.	P34,P35,P36,P37, P20,P21,P22,P23, P00,P01,P02,P03	1st	—
Analog comparator					
CMP0P	I	Comparator0 Non-inverted input pin.	P30	1st	—
CMP0M	I	Comparator0 Inverted input pin.	P31	1st	—
CMP1P	I	Comparator1 Non-inverted input pin.	P32	1st	—
CMP1M	I	Comparator1 Inverted input pin.	P33	1st	—
For testing					
TEST0	I/O	Input/output pin for testing. A pull-down resistor is internally connected.	TEST0	—	—
TEST1_N	I	Input pin for testing. A pull-up resistor is internally connected.	TEST1_N	—	—
Power supply					
V_{SS}	—	Negative power supply pin.	V_{SS}	—	—
V_{DD}	—	Positive power supply pin.	V_{DD}	—	—
V_{DDL}	—	Positive power supply pin (internally generated) for internal logic. Capacitors C_{L0} and C_{L1} are connected between this pin and V_{SS}.	V_{DDL}	—	—
V_{DDX}	—	Positive power supply pin (internally generated) for low-speed oscillation. Capacitor C_{X1} is connected between this pin and V_{SS}.	V_{DDX}	—	—

TERMINATION OF UNUSED PINS

Table 1 shows methods of terminating the unused pins.

Table 1 Termination of Unused Pins

Pin	Recommended pin termination
RESET_N	open
TEST0	open
TEST1_N	open
V_{REF}	Connect to V_{DD}
P00 to P05	open
PXT0 to PXT1	open
P10 to P11	open
P20 to P23	open
P30 to P37	open
P40 to P47	open
P50 to P57	open

Note:
For unused input ports or unused input/output ports, if the corresponding pins are configured as high-impedance inputs and left open, the supply current may become excessively large. Therefore, it is recommended to configure those pins as either inputs with a pull-down resistor/pull-up resistor or outputs.

ELECTRIC CHARACTERISTICS

Absolute Maximum Ratings

(V_{SS}=0V)

Parameter	Symbol	Condition	Rating	Unit
Power supply voltage 1	V_{DD}	Ta=25°C	-0.3 to +6.0	V
Power supply voltage 2	V_{DDL}	Ta=25°C	-0.3 to +2.0	V
Power supply voltage 3	V_{DDX}	Ta=25°C	-0.3 to +2.0	V
Input voltage	V_{IN}	Ta=25°C	-0.3 to V_{DD}+0.3	V
Output voltage	V_{OUT}	Ta=25°C	-0.3 to V_{DD}+0.3	V
Output current 1	I_{OUT1}	Port 0 to 2 Ta=25°C	-12 to +11	mA
Output current 2	I_{OUT2}	Port 3 to 5 Ta=25°C	-12 to +20	mA
Power dissipation	PD	Ta=25°C	0.9	W
Storage temperature	T_{STG}	—	-55 to +150	°C

Recommended Operating Conditions

(V_{SS}=0V)

Parameter	Symbol	Condition	Range	Unit
Operating temperature (Ambience)	T_{OP}	—	-40 to +85	°C
Operating voltage	V_{DD}	—	1.8 to 5.5	V
Reference voltage	V_{REF}	—	1.8 to V_{DD}	V
Operating frequency (CPU)	f_{OP}	—	30k to 16.8M	Hz
Low-speed external clock input	f_{EXTL}	—	30k to 36k	Hz
High-speed external clock input	f_{EXTH}	—	2M to 16M	Hz
Low speed crystal oscillation frequency	f_{XTL}	—	32.768k	Hz
Low speed crystal oscillation external capacitor 1	C_{DL}	Using VT-200-FL(from SII)	6.8 to 12	pF
	C_{GL}		6.8 to 12	
Low speed crystal oscillation external capacitor 2	C_{DL}	Using DT-26(from Daishinku)	12 to 16	pF
	C_{GL}		12 to 16	
Low speed crystal *1 oscillation external capacitor 3	C_{DL}	Using VT-200-F(from SII)	12 to 22	pF
	C_{GL}		12 to 22	
High speed Crystal/ Ceramic oscillation frequency	f_{XTH}	—	16M	Hz
High speed crystal oscillation external capacitor	C_{DH}	Using NX8045GB (from Nihon Denpa Kogyo)	12 to 20	pF
	C_{GH}		12 to 20	
Ceramic oscillation External capacitor	C_{DH}	Using FCSTCE16M0V53 (from Murata manufacturing) Build in CL type	0 to 5	pF
	C_{GH}		0 to 5	
V_{DDL} external capacitor *2	C_L	ESR ≦ 500mΩ	2.2 ± 30%	μF
V_{DDX} external capacitor	C_X	—	0.33 ± 30%	μF

*1 : Please use this crystal except DEEPHALT mode because this LSI may not be functioning at DEEPHALT mode with the crystal. Please evaluate the matching when other crystal oscillator/ ceramic oscillator is used.

*2 : Please evaluate on user's conditions, put on C_{L0}(= 0.1uF) if necessary.

Operating Conditions of Flash Memory

(V_{SS}= 0V)

Parameter	Symbol	Condition		Range	Unit
Operating temperature (Ambience)	T_{OP}	Data area : write/erase		-40 to +85	°C
		Program area : write/erase		0 to +40	°C
Operating voltage Write time	V_{DD}	Write/erase		1.8 to 5.5	V
	C_{EPD}	Data area (1,024B x 2)		10,000	times
	C_{EPP}	Program area		100	times
Erase unit	—	Block erase	Program area	8	KB
			Data area	2	
		Sector erase		1	KB
Erase time(Maximum)	—	Block erase/Sector erase		100	ms
Write unit	—	—		1 word (2 byte)	—

AC characteristics (Oscillation, reset)

(V_{DD}=1.8 to 5.5V, V_{SS}=0V, Ta=-40 to +85°C , unless otherwise specified)

Parameter	Symbol	Condition	Rating			Unit	Measuring circuit
			Min.	Typ.	Max.		
Low speed crystal oscillation start time	T_{XTL}	—	—	—	2	s	1
High speed crystal oscillation start time	T_{XTH}	—	—	—	20	ms	
Low speed built-in RC oscillation frequency*1*2	f_{LCR}	Ta=25°C	typ -1.5%	32.768	typ +1.5%	kHz	
		Ta=-40 ~ 85°C	typ -5%	32.768	typ +5%		
High speed build-in RC oscillation frequency*1*2	f_{HCR}	Ta=25°C	typ -1%	16	typ +1%	MHz	
		Ta=-40 to 85°C	typ -5%	16	typ +5%		
Reset pulse width	P_{RST}	—	200	—	—	us	
Reset noise elimination pulse width	P_{NRST}	—	—	—	0.3	us	
Power-on reset activation power rise time	T_{POR}	–	–	–	10	ms	

*1 : Mean value of 1024 cycle.
*2 : Guarantee value at the time of the shipment.

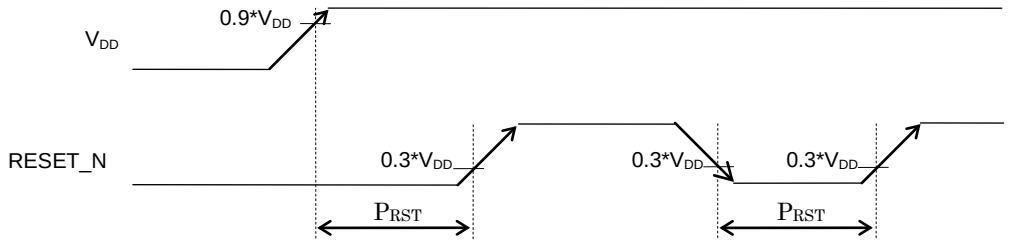

External reset sequence

Power on reset sequence

DC Characteristics (IDD)

(V_{DD}=1.8 to 5.5V, V_{SS}=0V, Ta=-40 to +85°C, unless otherwise specified)

Parameter	Symbol	Condition		Rating Min.	Rating Typ. (3.0V)	Rating Max. (3.6V)	Rating Max. (5.5V)	Unit	Measuring circuit
Power consumption 1	IDD1	CPU is Stopped Low/High-speed oscillation is stopped	Ta=25°C	–	0.25	0.8	1.3	μA	1
			Ta=-40 to 85°C	–	–	15	18		
Power consumption 2	IDD2	DEEP-HALT mode *2*4 (LBTC function) Low-speed crystal oscillating (32.768kHz) High-speed oscillation is stopped.	Ta=25°C	–	0.45	1.3	1.6	μA	
			Ta=-40 to 85°C	–	–	15	18		
Power consumption 3	IDD3	HALT mode *2*4 (LTBC function) Low-speed crystal oscillating (32.768kHz) High speed oscillation is stopped.	Ta=25°C	–	2	2.7	3.0	μA	
			Ta=-40 to 85°C	–	–	18	19		
Power consumption 4	IDD4	CPU Low-speed *1*4 Low-speed built-in CR oscillating High speed oscillation is stopped.	Ta=25°C	–	10	12	13	μA	
			Ta=-40 to 85°C	–	–	25	28		
Power consumption 5	IDD5	CPU High-speed(16MHz) *1*4 High-speed Built-in CR oscillating	Ta=25°C	–	4	5.5	5.5	mA	
			Ta=-40 to 85°C	–	–	6	6		
Power consumption 6	IDD6	CPU High-speed(16MHz) *1*3*4 High speed crystal oscillating (16MHz)	Ta=25°C	–	6	7.5	9.4	mA	
			Ta=-40 to 85°C	–	–	8	9.9		

*1 : at CPU activity rate =100%（No HALT state）
*2 : using 32.768KHz crystal oscillator VT-200-FL (from SII)(C_{GL}/C_{DL}＝12pF)
using 32.768KHz crystal oscillator DT-26(from Daishinku)(C_{GL}/C_{DL}＝12pF）
*3 : using NX8045GB(from Nihon denpa kogyo) (C_{GH}/C_{DH}＝16pF)
*4 : BLKCON0~BLKCON5 valid bits are all “1”.

DC Characteristics (VLS)

(V_{DD}=1.8 to 5.5V, V_{SS}=0V, Ta=-40 to +85°C, unless otherwise specified)

Parameter	Symbol	Condition	Rating*1			Unit	Measuring circuit
			Min.	Typ.	Max.		
VLS judge voltage (V_{DD}=fall)	V_{VLS}	vlscon = 3H	1.798	1.898	1.998	V	1
		vlscon = 4H	1.900	2.000	2.100		
		vlscon = 5H	1.993	2.093	2.193		
		vlscon = 6H	2.096	2.196	2.296		
		vlscon = 7H	2.209	2.309	2.409		
		vlscon = 8H	2.309	2.409	2.509		
		vlscon = 9H	2.505	2.605	2.705		
		vlscon = AH	2.700	2.800	2.900		
		vlscon = BH	2.968	3.068	3.168		
		vlscon = CH	3.294	3.394	3.494		
		vlscon = DH	3.697	3.797	3.897		
		vlscon = EH	4.126	4.226	4.326		
		vlscon = FH	4.567	4.667	4.767		
V_{VLS} Hysteresis width (V_{DD}=rise)	H_{VLS}	–	V_{VLS} x 1.8%	V_{VLS} x 3.8%	V_{VLS} x 6.3%	V	

DC characteristics (LLD)

(V_{DD}=1.8 to 5.5V, V_{SS}=0V, Ta=-40 to +85°C, unless otherwise specified)

Parameter	Symbol	Condition	Rating			Unit	Measuring circuit
			Min.	Typ.	Max.		
LLD judge Voltage	VLLR	—	1.60	1.80	2.00	V	1

DC characteristics (Analog comparator)

(V_{DD}=1.8 to 5.5V, V_{SS}=0V, Ta=-40 to +85°C, unless otherwise specified)

Parameter	Symbol	Condition	Rating			Unit	Measuring circuit
			Min.	Typ.	Max.		
Common input voltage range	V_{CMPIN}	—	0.2	—	V_{DD} -0.2	V	1
Input offset voltage	V_{CMPOF}	—	-30	—	30	mV	
Comparator judge time	T_{CMP}	CMPP- CMPM =40mV	—	—	2	μs	

DC characteristics (VOHL, IOHL)

(V_{DD}=1.8 to 5.5V, V_{SS}=0V, Ta=-40 to +85°C, unless otherwise specified)

Parameter	Symbol	Condition	Rating Min.	Rating Typ.	Rating Max.	Unit	Measuring circuit
Output voltage 1 (P00-P05, P10-P11 P20-P23, P30-P37 P40-P47, P50-P57)	VOH1	3.6V < V_{DD} ≤ 5.5V IOH=-2.5mA	V_{DD} -0.6	–	–	V	2
		1.8V ≤ V_{DD} ≤ 3.6V IOH=-1.0mA	V_{DD} -0.5	–	–		
	VOL1	3.6V < V_{DD} ≤ 5.5V IOL=+5.0mA	–	–	0.6		
		1.8V ≤ V_{DD} ≤ 3.6V IOL=+0.5mA	–	–	0.4		
Output voltage 2 (P40,P41, P52, P53) (LED mode is selected)	VOL2	3.6V < V_{DD} ≤ 5.5V IOL=+5.0mA	–	–	0.4		
		2.7V ≤ V_{DD} ≤ 3.6V IOL=+5.0mA	–	–	0.6		
		1.8V ≤ V_{DD} < 2.7V IOL=+2.0mA	–	–	0.4		
Output voltage 3 (P30,P31, P34, P35, P40, P41, P44, P45, P50, P51, P54, P55) (I^2C mode is selected)	VOL3	IOL3= +3mA (I^2Cspec) (V_{DD} ≥ 2V)	–	–	0.4		
Output voltage 4 (P30, P31, P34, P35, P40, P41, P44, P45, P50, P51, P54, P55) (I^2C mode is selected)	VOL4	IOL3= +2mA(I^2Cspec) (V_{DD} < 2V)	–	–	V_{DD} ×0.2		
Output leak 1 (P00-P05,P20-P23, P30-P37, P40-P47, P50-P57)	IOOH1	VOH=V_{DD} (at high impedance)	–	–	+1	μA	3
	IOOL1	VOL=V_{SS} (at high impedance)	-1	–	–		
Output leak 2 (P10-P11)	IOOH2	VOH=V_{DD} (at high impedance)	–	–	+2		
	IOOL2	VOL=V_{SS} (at high impedance)	-2	–	–		

DC characteristics (IIHL)

(V_{DD}=1.8 to 5.5V, V_{SS}=0V, Ta=-40 to +85°C, unless otherwise specified)

Parameter	Symbol	Condition	Rating*1			Unit	Measuring circuit
			Min.	Typ.	Max.		
Input current 1 (RESET_N, TEST1_N)	IIH1	VIH1=V_{DD}	—	—	1	μA	4
	IIL1	VIL1=V_{SS}	-900	-300	-20		
Input current 2 (TEST0)	IIH2	VIH2=V_{DD}	20	300	900		
	IIL2	VIL2=V_{SS}	-1	—	—		
Input current 3 (PXT0-PXT1, P00-P05, P20-P23, P30-P37, P40-P47, P50-P57)	IIH3	VIH3=V_{DD} (at pull down)	1	15	200		
	IIL3	VIL3=V_{SS} (at pull up)	-200	-15	-1		
	IIH3Z	VIH3=V_{DD} (at high impedance)	—	—	1		
	IIL3Z	VIL3=V_{SS} (at high impedance)	-1	—	—		
Input current 4 (P10-P11)	IIH4	VIH4=V_{DD} (at pull down)	1	15	200		
	IIL4	VIL4=V_{SS} (at pull up)	-200	-15	-1		
	IIH4Z	VIH4=V_{DD} (at high impedance)	—	—	2		
	IIL4Z	VIL4=V_{SS} (at high impedance)	-2	—	—		

*1 : typ.rating is Ta=25°C , V_{DD}=3.0V

DC characteristics (VIHL)

(V_{DD}=1.8 to 5.5V, V_{SS}=0V, Ta=-40 to +85°C, unless otherwise specified)

Parameter	Symbol	Condition	Rating			unit	Measuring circuit
			Min.	Typ.	Max.		
Input voltage 1 (RESET_N, TEST0, TEST1_N, PXT0-PXT1, P00-P05, P10-P11, P20-P23, P30-P37, P40-P47, P50-P57)	VIH1	—	0.7 ×V_{DD}	—	V_{DD}	V	5
	VIL1	—	0	—	0.3 ×V_{DD}		
Input terminal capacitance (RESET_N, TEST0, TEST1_N, PXT0-PXT1,, P00-P05, P10-P11, P20-P23, P30-P37, P40-P47, P50-P57)	CIN	f=10kHz V_{rms}=50mV Ta=25°C	—	—	10	pF	—

Measuring circuit

Measuring circuit 1

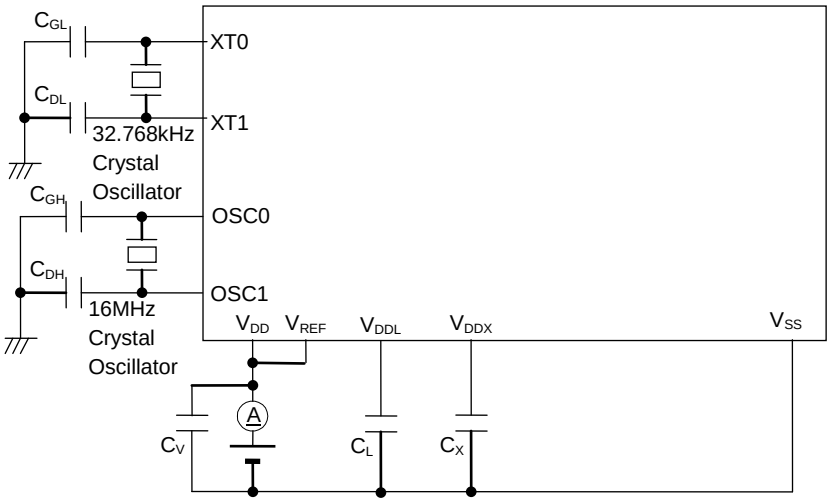

C_V	:	1.0μF
C_L	:	2.2μF
C_X	:	0.33μF
C_{GL}	:	12pF
C_{DL}	:	12pF
C_{GH}	:	16pF
C_{DH}	:	16pF

32.768kHz crystal oscillator : DT-26 (from Daishinku)
16MHz crystal oscillator : NX8045GB (from Nihon denpa kogyo)

Measuring circuit 2

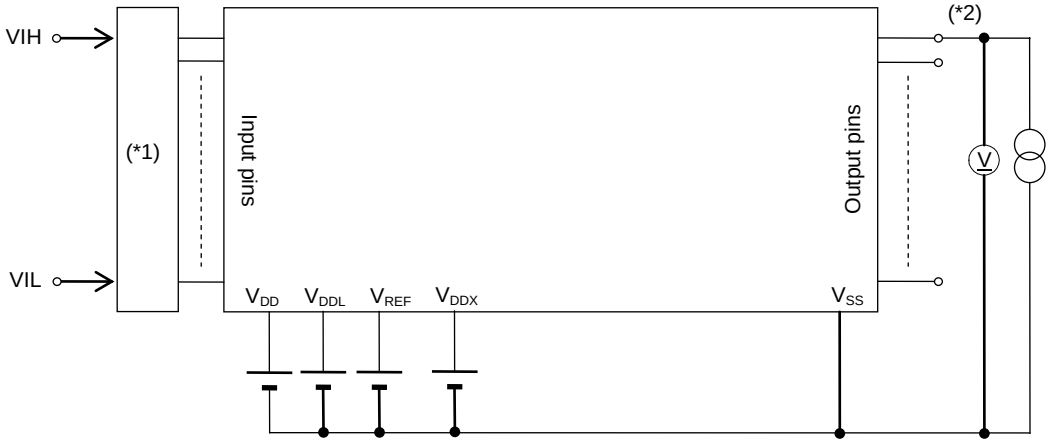

(*1) Input logic circuit to determine the specified measuring conditions.
(*2) Measured at the specified output pins.

Measuring circuit 3

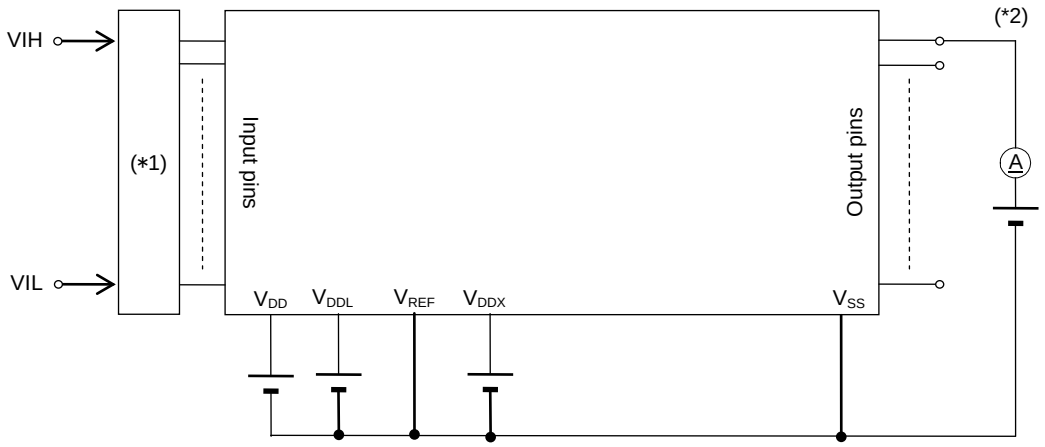

(*1) Input logic circuit to determine the specified measuring conditions.
(*2) Measured at the specified output pins.

Measuring circuit 4

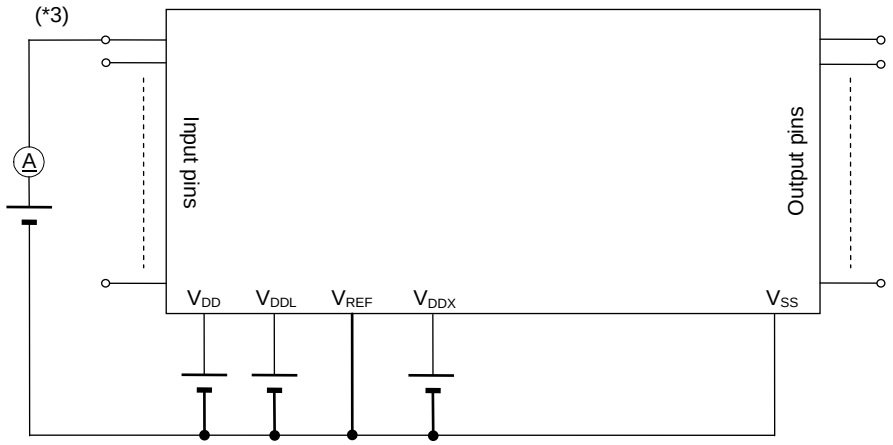

(*3) Measured at the specified output pins.

Measuring circuit 5

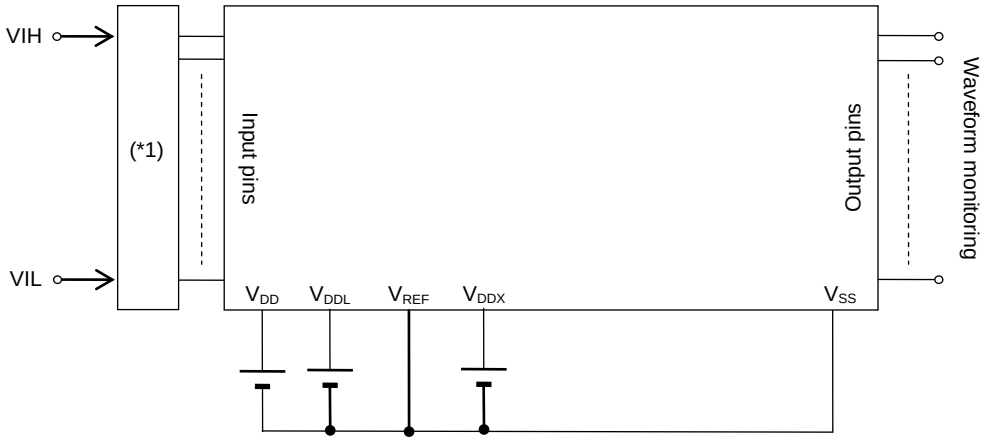

(*1) Input logic circuit to determine the specified measuring conditions.

AC characteristics (external interrupt)

(V_{DD}=1.8 to 5.5V, V_{SS}=0V, Ta=-40 to +85°C, unless otherwise specified)

Parameter	Symbol	Condition	Rating			unit
			Min.	Typ.	Max.	
External interrupt disable period	t_{NUL}	Interruput enable (MIE=1) CPU : NOP operation	2.5 x sysclk	—	3.5 x sysclk	φ

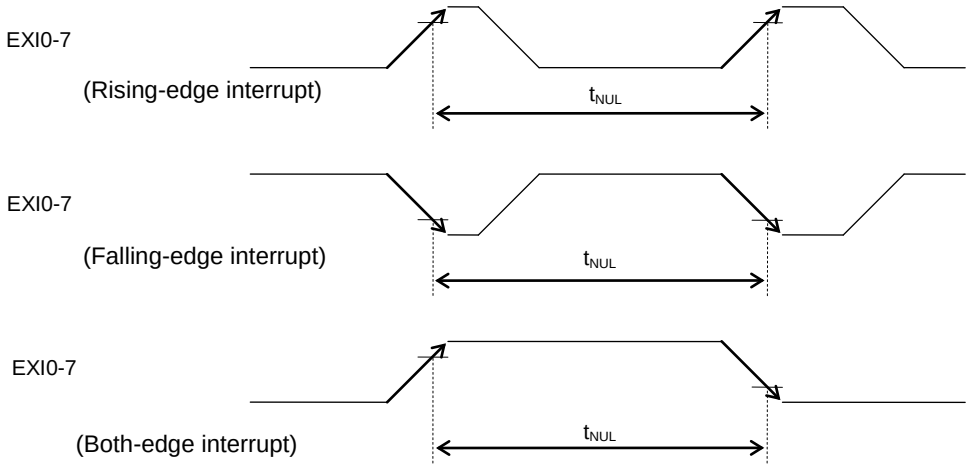

AC characteristics (synchronous serial port)

(V_{DD}=1.8 to 5.5V, V_{SS}=0V, Ta=-40 to +85°C, unless otherwise specified)

Parameter	Symbol	Condition	Rating			unit
			Min.	Typ.	Max.	
SCK input cycle (slave mode)	t_{SCYC}	High-speed oscillation is not active	10	—	—	μs
		High speed oscillation is active	500	—	—	ns
SCK output cycle (master mode)	t_{SCYC}	—	—	SCK*[1]	—	s
SCK input pulse width (slave mode)	t_{SW}	High-speed oscillation is not active	4	—	—	μs
		High speed oscillation is active	200	—	—	ns
SCK output pulse width (master mode)	t_{SW}	—	t_{SCYC} ×0.4	t_{SCYC} ×0.5	t_{SCYC} ×0.6	s
SOUT output delay time (slave mode)	t_{SD}	—	—	—	180	ns
SOUT output delay time (master mode)	t_{SD}	—	—	—	80	ns
SIN input Setup time (slave mode)	t_{SS}	—	50	—	—	ns
SINinput Hold time	t_{SH}	—	50	—	—	ns

*1 : The clock period which is selected by the below registers(min:250ns@reguraly, min:500ns@P02, P22 is used)
In case of SSIO : S0CK2-0 of serial port 0 mode register(SIO0MOD).
In case of SSIOF : SF0BR9-0 of SIOF0 port register(SF0BRR)

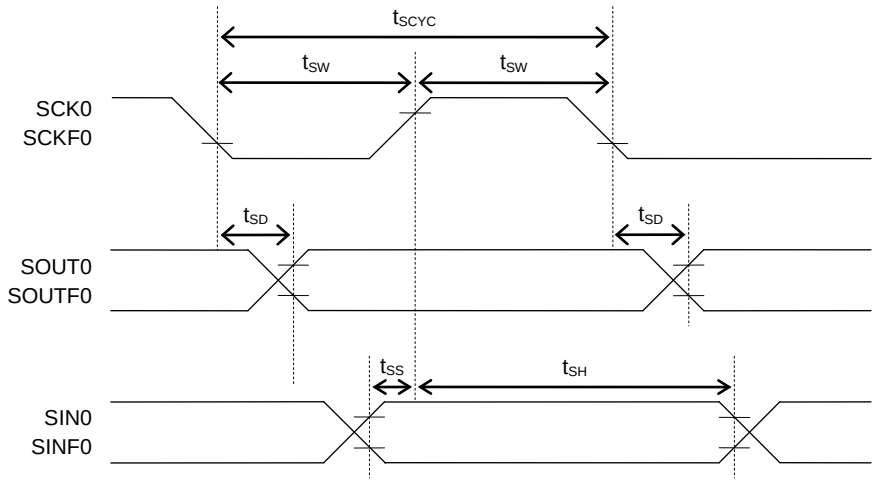

AC characteristics（I²C Bus interface : Standard mode 100kHz）

(V_{DD}=1.8 to 5.5V, V_{SS}=0V, Ta=-40 to +85°C, unless otherwise specified)

Parameter	Symbol	Condition	Rating			unit
			Min.	Typ.	Max.	
SCL clock frequency	f_{SCL}	—	0	—	100	kHz
SCL hold time (Start/restart condition)	$t_{HD:STA}$	—	4.0	—	—	μs
SCL"L" level time	t_{LOW}	—	4.7	—	—	μs
SCL"H" level time	t_{HIGH}	—	4.0	—	—	μs
SCL setup time (restart condition)	$t_{SU:STA}$	—	4.7	—	—	μs
SDA hold time	$t_{HD:DAT}$	—	0	—	3.45	μs
SDA setup time	$t_{SU:DAT}$	—	0.25	—	—	μs
SCL setup time (stop condition)	$t_{SU:STO}$	—	4.0	—	—	μs
Bus-free time	t_{BUF}	—	4.7	—	—	μs

AC characteristics（I²C bus interface : fast mode 400kHz）

(V_{DD}=1.8 to 5.5V, V_{SS}=0V, Ta=-40 to +85°C, unless otherwise specified)

Parameter	Symbol	Condition	Rateing			unit
			Min.	Typ.	Max.	
SCL clock frequency	f_{SCL}	—	0	—	400	kHz
SCLhold time (start/restart condition)	$t_{HD:STA}$	—	0.6	—	—	μs
SCL"L" level time	t_{LOW}	—	1.3	—	—	μs
SCL"H" level time	t_{HIGH}	—	0.6	—	—	μs
SCL setup time (restart condition)	$t_{SU:STA}$	—	0.6	—	—	μs
SDA hold time	$t_{HD:DAT}$	—	0	—	0.9	μs
SDA setup time	$t_{SU:DAT}$	—	0.1	—	—	μs
SCLsetup time (stop condition)	$t_{SU:STO}$	—	0.6	—	—	μs
Bus-free time	t_{BUF}	—	1.3	—	—	μs

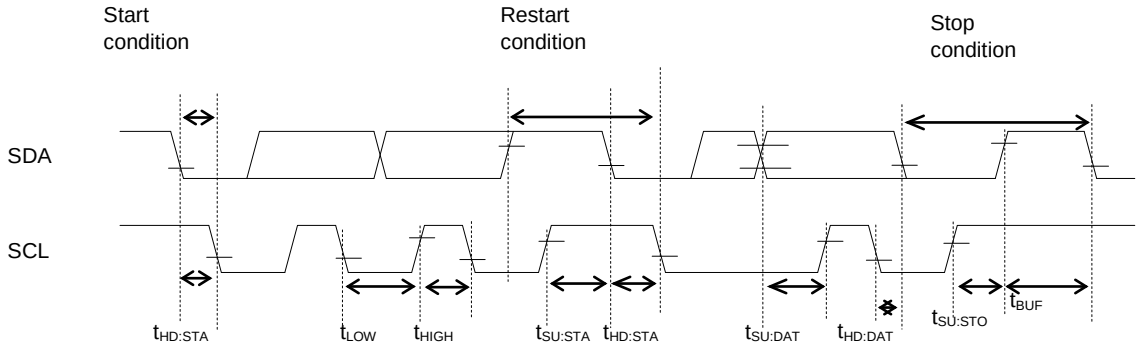

AC characteristics（RC Oscillation A/D Converter）

(V_{DD}=1.8~5.5V, V_{SS}=0V, Ta=-40~+85°C, unless otherwise specified)

Parameter	Symbol	Condition	Rating			unit
			Min.	Typ.	Max.	
Resister for oscillation	RS0,RS1,RT0 ,RT0-1,RT1	–	1	–	400	kΩ
Oscillation frequency V_{DD} = 3.0V CVR=820pF CS=560pF RAMD0=0	f_{OSC1_0}	Resister for oscillation =1kΩ	–	528	–	kHz
	f_{OSC2_0}	Resister for oscillation =10kΩ	–	59	–	kHz
	f_{OSC3_0}	Resister for oscillation =100kΩ	–	5.9	–	kHz
RS to RT oscillation frequency ratio *1 V_{DD} = 3.0V CVR=820pF CS=560pF RAMD0=0	Kf1_0	RT0, RT0-1, RT1=1kΩ	8.225	8.94	9.655	–
	Kf2_0	RT0, RT0-1, RT1=10kΩ	0.99	1	1.01	–
	Kf3_0	RT0, RT0-1, RT1=100kΩ	0.093	0.101	0.109	–
Oscillation frequency V_{DD} = 5.0V CVR=820pF CS=560pF RAMD0=1	f_{OSC1_0}	Resister for oscillation =1kΩ	–	528	–	kHz
	f_{OSC2_0}	Resister for oscillation =10kΩ	–	59	–	kHz
	f_{OSC3_0}	Resister for oscillation =100kΩ	–	5.9	–	kHz
RS to RT oscillation frequency ratio *1 V_{DD} = 5.0V CVR=820pF CS=560pF RAMD0=1	Kf1_0	RT0, RT0-1, RT1=1kΩ	8.225	8.94	9.655	–
	Kf2_0	RT0, RT0-1, RT1=10kΩ	0.99	1	1.01	–
	Kf3_0	RT0, RT0-1, RT1=100kΩ	0.093	0.101	0.109	–

*1: Kfx is the ratio of the oscillation frequency by the sensor resistor to the oscillation frequency by the reference resistor on the same conditions.

$$Kfx = \frac{f_{OSCx}(\text{RT0-CS0 oscillation})}{f_{OSCx}(\text{RS0-CS0 oscillation})}, \quad \frac{f_{OSCx}(\text{RT0-1-CS0 oscillation})}{f_{OSCx}(\text{RS0-CS0 oscillation})}, \quad \frac{f_{OSCx}(\text{RT1-CS1 oscillation})}{f_{OSCx}(\text{RS1-CS1 oscillation})}$$

(x = 1, 2, 3)

Measuring circuit

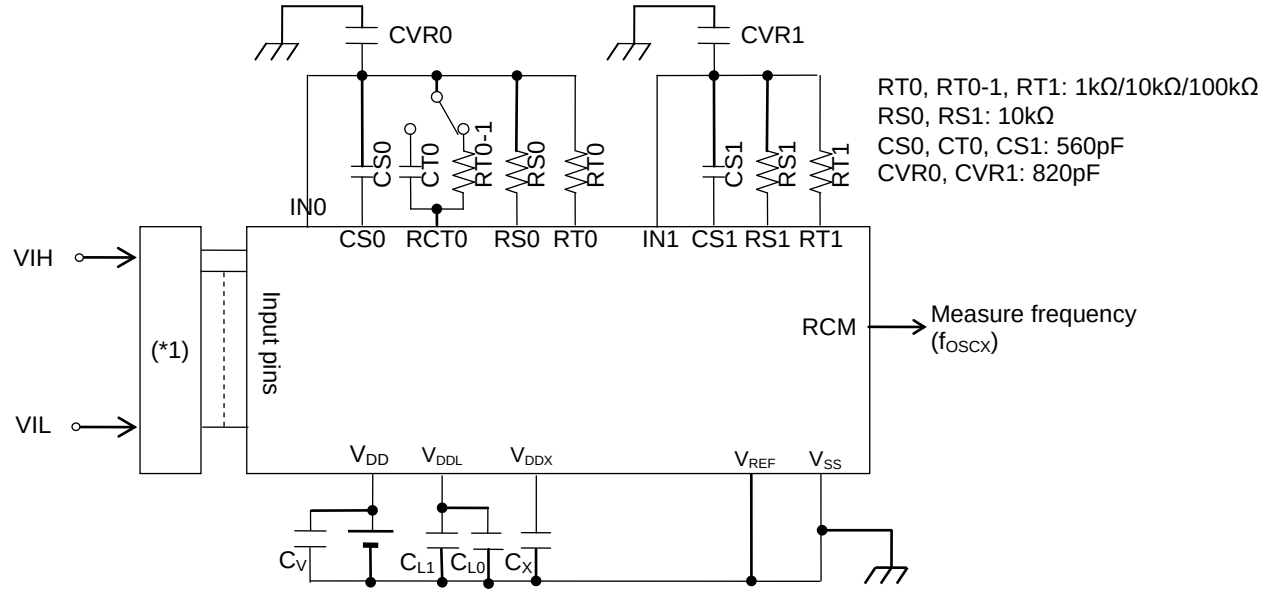

(*1) Input logic circuit to determine the specified measuring conditions.

【Note】

・Please have the shortest layout for the common node (wiring patterns which are connected to the external capacitors, resistors and IN0/IN1 pin), including CVR0/CVR1. Especially, do not have long wire between IN0/IN1 and RS0/RS1. The coupling capacitance on the wires may occur incorrect A/D conversion. Also, please do not have signals which may be a source of noise around the node.

・When RT0/RT1 (Thermistor and etc.) requires long wiring due to the restricted placement, please shield the signal by V_{SS}(GND) .

・Please make wiring to components (capacitor, resistor and etc.) necessary for objective measurement. Wiring to reserved components may affect to the A/D conversion operation by noise the components itself may have.

Electrical Characteristics of Successive Approximation Type A/D Converter

(V_{DD}=1.8 to 5.5V, V_{SS}=0V, Ta=-40 to +85°C, unless otherwise specified)

Parameter	Symbol	Condition	Rating			Unit
			Min.	Typ.	Max.	
Resolution	n	—	—	12	—	bit
Integral non-linearity error	INL	2.7V ≦ V_{REF} ≦ 5.5V	-4	—	+4	LSB
		2.2V ≦ V_{REF} < 2.7V	-6	—	+6	
		1.8V ≦ V_{REF} < 2.2V (using Low-speed clock)	-10	—	+10	
Differential non-linearity error	DNL	2.7V ≦ V_{REF} ≦ 5.5V	-3	—	+3	
		2.2V ≦ V_{REF} < 2.7V	-5	—	+5	
		1.8V ≦ V_{REF} < 2.2V (using Low-speed clock)	-9	—	+9	
Zero-scale error	V_{OFF}	2.2V ≦ V_{REF} ≦ 5.5V	-6	—	+6	
		1.8V ≦ V_{REF} < 2.2V (using Low-speed clock)	-10	—	+10	
Full-scale error	FSE	2.2V ≦ V_{REF} ≦ 5.5V	-6	—	+6	
		1.8V ≦ V_{REF} < 2.2V (using Low-speed clock)	-10	—	+10	
Input impidance	RI	—	—	—	5k	Ω
Reference voltage	V_{REF}	—	1.8	—	V_{DD}	V
Conversion time	t_{CONV}	Using High-speed clock(max. 4MHz)	—	170	—	clk
		Using Low-speed clock	—	16	—	

Measuring circuit

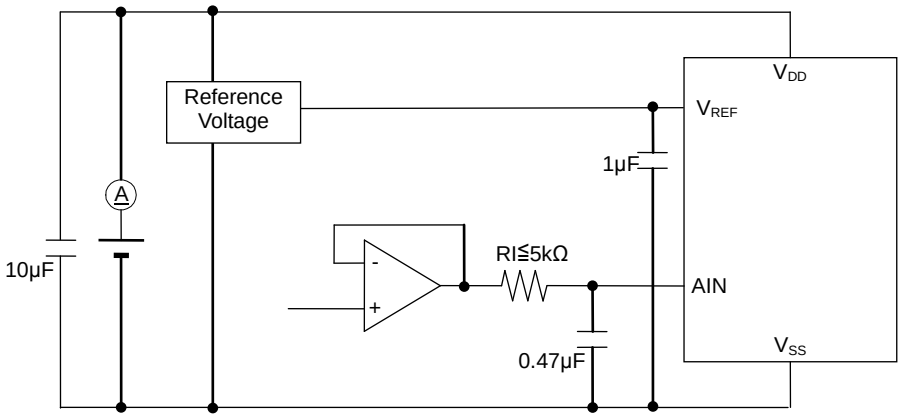

Power-on and shutdown Procedures

In case of power-on or shutdown of V_{DD}, the procedures and constraints are shown as following.

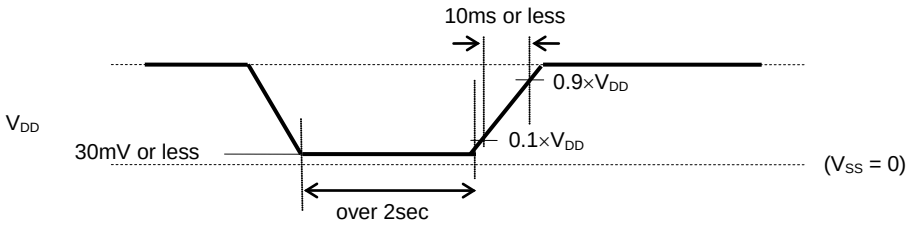

APPLICATION CIRCUIT EXAMPLE

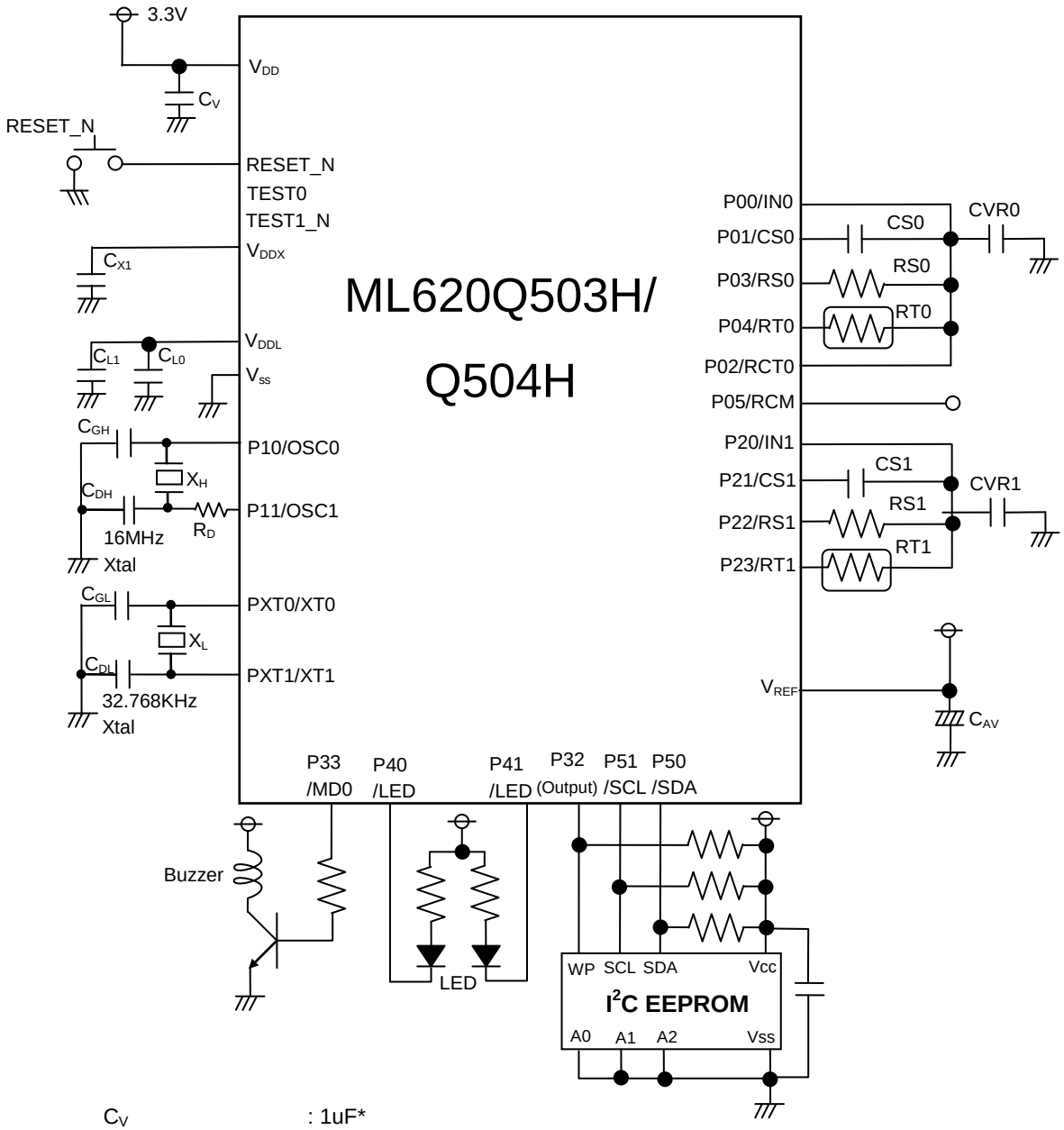

C_V	: 1uF*		
C_{L1}	: 2.2uF	C_{L0}	: open*
C_{X1}	: 0.33uF		
C_{GL}	: 12~16pF*	C_{DL}	: 12~16pF*
C_{GH}	: 12~20pF*	C_{DH}	: 12~20pF*
R_D	: 0Ω*		
C_{AV}	: 1uF*	RS0, RS1	: 10 KΩ
CS0, CS1	: 560 pF	CVR0, CVR1	: 820 pF
RT0, RT1	: Thermistor (103AT/Semitec)		
X_H	: NX8045GB/16.000MHz, Nihon Denpa Kogyo		
X_L	: DT-26, Daishinku		

*: Make a decision the parameters after evaluating on an user's conditions when designing circuits for mass production.

PACKAGE DIMENSIONS

ML620Q503H/Q504H Package Dimensions

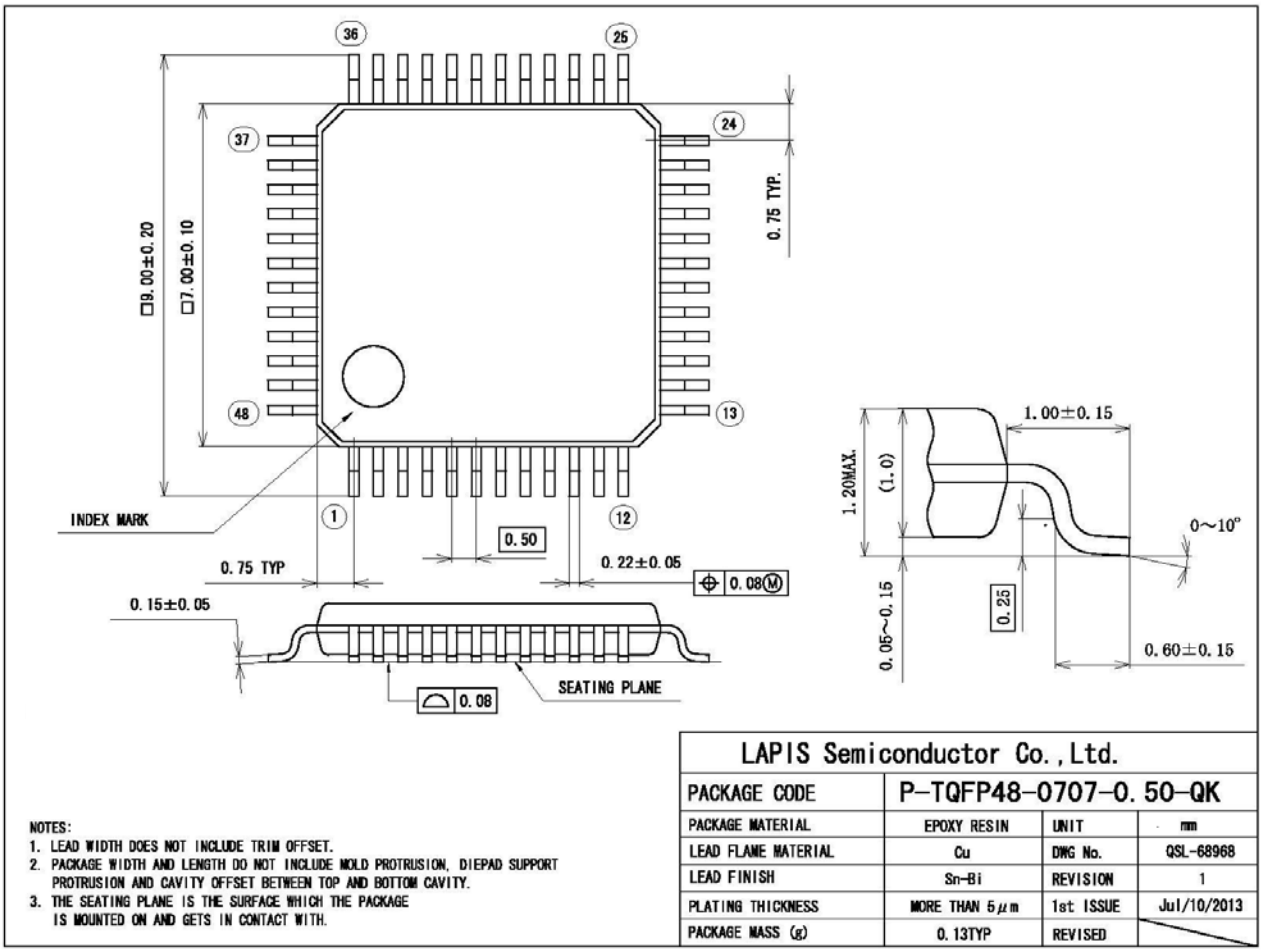

Notes for Mounting the Surface Mount Type Package

The surface mount type packages are very susceptible to heat in reflow and humidity absorbed in storage. Therefore, before you perform reflow mounting, contact a ROHM sales office for the product name, package name, pin number, package code and desired mounting conditions(reflow method, temperature and times).

REVISION HISTORY

Document No.	Date	Page		Description
		Previous Edition	Current Edition	
FEDL620Q504H-01	Aug.31.2015	–	–	Final Edition issued

Notes

1) The information contained herein is subject to change without notice.

2) Although LAPIS Semiconductor is continuously working to improve product reliability and quality, semiconductors can break down and malfunction due to various factors. Therefore, in order to prevent personal injury or fire arising from failure, please take safety measures such as complying with the derating characteristics, implementing redundant and fire prevention designs, and utilizing backups and fail-safe procedures. LAPIS Semiconductor shall have no responsibility for any damages arising out of the use of our Products beyond the rating specified by LAPIS Semiconductor.

3) Examples of application circuits, circuit constants and any other information contained herein are provided only to illustrate the standard usage and operations of the Products.The peripheral conditions must be taken into account when designing circuits for mass production.

4) The technical information specified herein is intended only to show the typical functions of the Products and examples of application circuits for the Products. No license, expressly or implied, is granted hereby under any intellectual property rights or other rights of LAPIS Semiconductor or any third party with respect to the information contained in this document; therefore LAPIS Semiconductor shall have no responsibility whatsoever for any dispute, concerning such rights owned by third parties, arising out of the use of such technical information.

5) The Products are intended for use in general electronic equipment (i.e. AV/OA devices, communication, consumer systems, gaming/entertainment sets) as well as the applications indicated in this document.

6) The Products specified in this document are not designed to be radiation tolerant.

7) For use of our Products in applications requiring a high degree of reliability (as exemplified below), please contact and consult with a LAPIS Semiconductor representative: transportation equipment (i.e. cars, ships, trains), primary communication equipment, traffic lights, fire/crime prevention, safety equipment, medical systems, servers, solar cells, and power transmission systems.

8) Do not use our Products in applications requiring extremely high reliability, such as aerospace equipment, nuclear power control systems, and submarine repeaters.

9) LAPIS Semiconductor shall have no responsibility for any damages or injury arising from non-compliance with the recommended usage conditions and specifications contained herein.

10) LAPIS Semiconductor has used reasonable care to ensure the accuracy of the information contained in this document. However, LAPIS Semiconductor does not warrant that such information is error-free and LAPIS Semiconductor shall have no responsibility for any damages arising from any inaccuracy or misprint of such information.

11) Please use the Products in accordance with any applicable environmental laws and regulations, such as the RoHS Directive. For more details, including RoHS compatibility, please contact a ROHM sales office. LAPIS Semiconductor shall have no responsibility for any damages or losses resulting non-compliance with any applicable laws or regulations.

12) When providing our Products and technologies contained in this document to other countries, you must abide by the procedures and provisions stipulated in all applicable export laws and regulations, including without limitation the US Export Administration Regulations and the Foreign Exchange and Foreign Trade Act.

13) This document, in part or in whole, may not be reprinted or reproduced without prior consent of LAPIS Semiconductor.

Copyright 2015 LAPIS Semiconductor Co., Ltd.

LAPIS Semiconductor Co.,Ltd.
2-4-8 Shinyokohama, Kouhoku-ku,
Yokohama 222-8575, Japan
http://www.lapis-semi.com/en/

Общество с ограниченной ответственностью «МосЧип» ИНН 7719860671 / КПП 771901001
Адрес: 105318, г.Москва, ул.Щербаковская д.3, офис 1107

Данный компонент на территории Российской Федерации

Вы можете приобрести в компании MosChip.

Для оперативного оформления запроса Вам необходимо перейти по данной ссылке:

http://moschip.ru/get-element

Вы можете разместить у нас заказ для любого Вашего проекта, будь то серийное производство или разработка единичного прибора.

В нашем ассортименте представлены ведущие мировые производители активных и пассивных электронных компонентов.

Нашей специализацией является поставка электронной компонентной базы двойного назначения, продукции таких производителей как XILINX, Intel (ex.ALTERA), Vicor, Microchip, Texas Instruments, Analog Devices, Mini-Circuits, Amphenol, Glenair.

Сотрудничество с глобальными дистрибьюторами электронных компонентов, предоставляет возможность заказывать и получать с международных складов практически любой перечень компонентов в оптимальные для Вас сроки.

На всех этапах разработки и производства наши партнеры могут получить квалифицированную поддержку опытных инженеров.

Система менеджмента качества компании отвечает требованиям в соответствии с ГОСТ Р ИСО 9001, ГОСТ РВ 0015-002 и ЭС РД 009

Офис по работе с юридическими лицами:

105318, г.Москва, ул.Щербаковская д.3, офис 1107, 1118, ДЦ «Щербаковский»

Телефон: +7 495 668-12-70 (многоканальный)

Факс: +7 495 668-12-70 (доб.304)

E-mail: info@moschip.ru

Skype отдела продаж:
moschip.ru
moschip.ru_4
moschip.ru_6
moschip.ru_9