SERIES 62C
Concentric Shaft

FEATURES
- Economical Size
- Combined Functionality
- Optically Coupled for More than a Million Cycles of Operations
- Optional Integral Pushbutton
- Compatible with CMOS, TTL, and HCMOS Logic
- Available with 12, 16, 24, and 32 Detent Positions for Each Code Section
- Choices of Cable Length and Terminations
- Available in 3.3 Volt Input. (Contact Grayhill for details)

APPLICATIONS
- Used to Set Radio Frequency, Drill Depth, RPM, Menu Selection, Parameter Selection for Patient Monitoring Devices, etc.

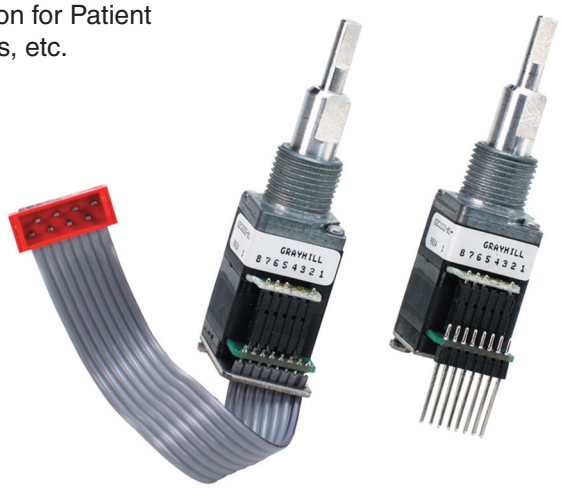

DIMENSIONS In inches (and millimeters)

Unless otherwise specified, standard tolerance are:
Linear ± .025
Diameter ± .010
Angle ± 2.0°

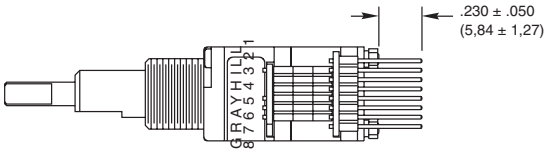

Pin Version

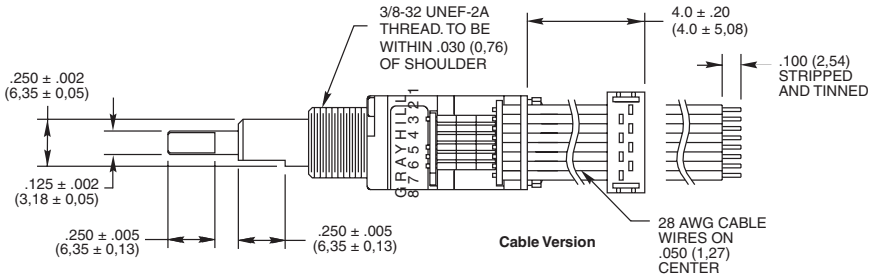

Cable Version

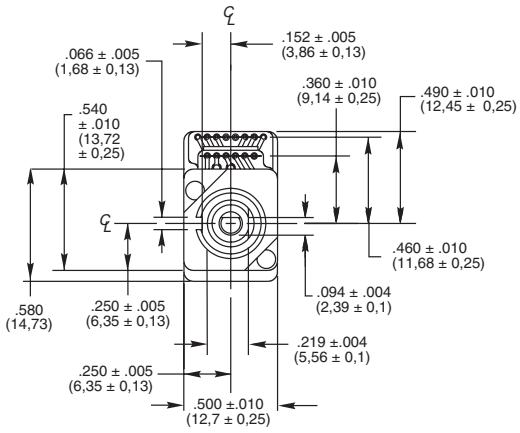

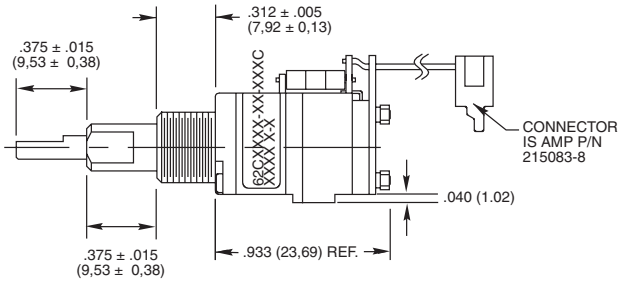

CIRCUITRY, TRUTH TABLE AND WAVEFORM: Standard Quadrature 2-Bit Code

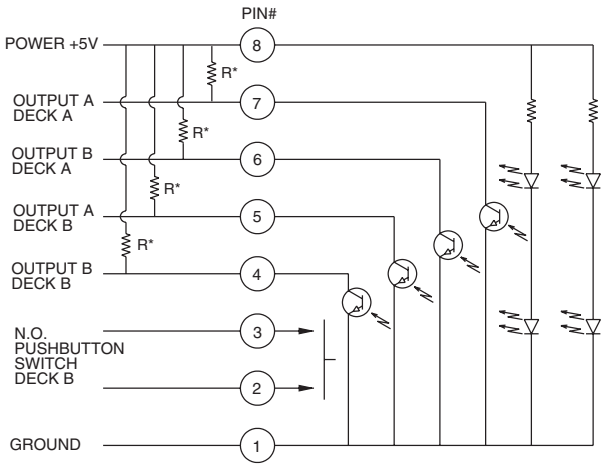

* External pull-up resistors required for operation (2.2kΩ)

Clockwise Rotation		
Position	Output A	Output B
1		
2	●	
3	●	●
4		●

● Indicates logic high; blank indicates logic low. Code repeats every 4 positions.

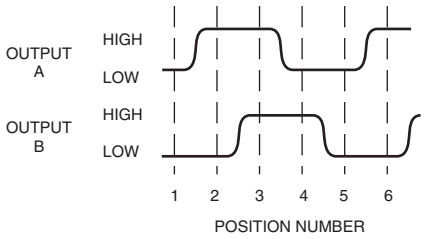

SPECIFICATIONS

Pushbutton Switch Ratings

Rating: 5 Vdc, 10 mA, resistive
Contact Resistance: less than 10 ohms (TTL or CMOS compatible)
Voltage Breakdown: 250 Vac between mutually insulated parts
Contact Bounce: less than 4 mS at make, less than 10 mS at break
Actuation Life: 3,000,000 operations
Actuation Force: 1000 ± 300 grams
Pushbutton Travel: .010 / .025 inch

Encoder Ratings

Coding: 2-bit quadrature coded output
Operating Voltage: 5 ± .25 Vdc
Supply Current: 50 mA maximum at 5 Vdc
Logic High: 3.8V minimum
Logic Low: 0.8V maximum
Logic Rise and Fall Times: less than 30 mS
Operating Torque: 2.0 in-oz ± 1.4 in-oz initially
Rotational Life: more than 1,000,000 cycles of operation (1 cycle = 360° rotation and return)
Shaft Push Out Force: 45 lbs minimum
Mounting Torque: 15 in-lbs maximum
Operating Speed: 100 RPM maximum
Axial Shaft Play: .010 maximum for each shaft

Environmental Ratings

Operating Temperature Range: -40°C to 85°C
Storage Temperature Range: -55°C to 100°C
Relative Humidity: 90–95% at 40°C for 96 hours
Vibration Resistance: Harmonic motion with amplitude of 15g, within a varied 10 to 2000 Hz frequency for 12 hours per MIL-STD-202, Method 204
Shock Resistance: Test 1: Tested at 100g for 6 mS, half sine, 12.3 ft/s Test 2: 100g for 6 mS, sawtooth, 9.7 ft/s

Materials and Finishes

Bushing: Zinc casting
Shaft: Aluminum
Shaft Retaining Ring: Stainless steel
Detent Spring: Stainless steel
Printed Circuit Board: NEMA grade FR-4
Terminals: Brass, tin-plated
Mounting Hardware: One brass, nickel-plated nut and stainless steel lockwasher supplied with each switch. (Nut is 0.094 inches thick by 0.433 inches across flats)
Rotor: Thermoplastic
Code Housing: Reinforced thermoplastic
Pushbutton Dome: Stainless steel
Pushbutton Housing: Thermoplastic
Pushbutton Contact: Brass, nickel-plated
Dome Retaining Disk: Thermoplastic
Strain Relief: Stainless steel
Cable: 28 AWG, stranded/top coated wire, PVC coated on .050 centers (cable version only)
Header Pins: Phosphor bronze, tin-plated
Insulator: Glass-filled polyester
Spacer: Zinc casting

ORDERING INFORMATION

62C2211- 02 - 040 C

Series
Style: C = Concentric
Angle of Throw (Deck A): 11 = 11.25° or 32 positions, 15 = 15° or 24 positions, 22 = 22.5° or 16 positions, 30 = 30° or 12 Positions
Angle of Throw (Deck B): 11 = 11.25° or 32 positions, 15 = 15° or 24 positions, 18 = 18° or 20 positions, 22 = 22.5° or 16 positions, 30 = 30° or 12 Positions

Termination: S = stripped cable, C = connector, P = pins
Cable Termination: 040 = 4.0in. Cable is terminated with Amp Connector P/N 215083-6. See Amp Mateability Guide for mating connector details. **Eliminate cable length if ordering pins.* (Ex: 62C2211-02-P)
Pushbutton Option: 01 = w/o pushbutton
02 = with pushbutton

Custom custom shaft, pushbutton actuation force and termination options are available.

Available from your local Grayhill Distributor. For prices and discounts, contact a local Sales Office, an authorized local Distributor or Grayhill.

Общество с ограниченной ответственностью «МосЧип» ИНН 7719860671 / КПП 771901001
Адрес: 105318, г.Москва, ул.Щербаковская д.3, офис 1107

Данный компонент на территории Российской Федерации

Вы можете приобрести в компании MosChip.

Для оперативного оформления запроса Вам необходимо перейти по данной ссылке:

http://moschip.ru/get-element

Вы можете разместить у нас заказ для любого Вашего проекта, будь то серийное производство или разработка единичного прибора.

В нашем ассортименте представлены ведущие мировые производители активных и пассивных электронных компонентов.

Нашей специализацией является поставка электронной компонентной базы двойного назначения, продукции таких производителей как XILINX, Intel (ex.ALTERA), Vicor, Microchip, Texas Instruments, Analog Devices, Mini-Circuits, Amphenol, Glenair.

Сотрудничество с глобальными дистрибьюторами электронных компонентов, предоставляет возможность заказывать и получать с международных складов практически любой перечень компонентов в оптимальные для Вас сроки.

На всех этапах разработки и производства наши партнеры могут получить квалифицированную поддержку опытных инженеров.

Система менеджмента качества компании отвечает требованиям в соответствии с ГОСТ Р ИСО 9001, ГОСТ РВ 0015-002 и ЭС РД 009

Офис по работе с юридическими лицами:

105318, г.Москва, ул.Щербаковская д.3, офис 1107, 1118, ДЦ «Щербаковский»

Телефон: +7 495 668-12-70 (многоканальный)

Факс: +7 495 668-12-70 (доб.304)

E-mail: info@moschip.ru

Skype отдела продаж:
moschip.ru
moschip.ru_4
moschip.ru_6
moschip.ru_9