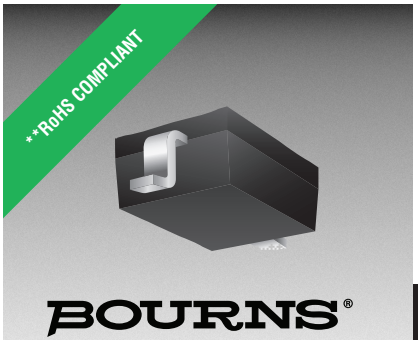

Features

- Lead free as standard*
- ESD protection 30 kV max.
- Low capacitance ~ 1.0 pF
- Protects 1 line
- Uni/bidirectional configuration

Applications

- HDMI 1.4
- Digital Visual Interface (DVI)
- USB 3.0 / USB OTG
- Memory protection
- SIM card ports

CDSOD323-TxxLC - TVS Diode Series

General Information

Portable communications, computing and video equipment manufacturers are challenging the semiconductor industry to develop increasingly smaller electronic components.

Bourns offers Transient Voltage Suppressor Diodes for surge and ESD protection applications in SOD323 package size format. The Transient Voltage Suppressor Diode series offers a choice of voltage types ranging from 5 V to 24 V in a unidirectional or bidirectional configuration.

Bourns® Chip Diodes conform to JEDEC standards, are easy to handle on standard pick and place equipment and their flat configuration minimizes roll away. The Bourns® device will assist compliance with IEC 61000-4-2 (ESD), IEC 61000-4-4 (EFT) and IEC 61000-4-5 (Surge) requirements.

Note: For 12 V and 24 V VDSL applications, the CDSOD323-TxxC-DSL family of devices is recommended.

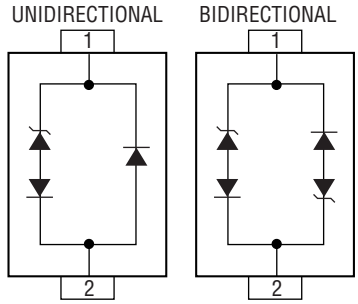

Electrical & Thermal Characteristics (@ T_A = 25 °C Unless Otherwise Noted)

Parameter	Symbol	Value	Unit
Unidirectional Peak Pulse Power (t_p = 8/20 µs)	P_{PP}	350	W
Bidirectional Peak Pulse Power (t_p = 8/20 µs)	P_{PP}	250	W
Operating Temperature	T_L	-55 to +150	ºC
Storage Temperature	T_{STG}	-55 to +150	ºC
ESD Protection (per IEC 61000-4-2) Contact - Min. Contact - Max. Air - Min. Air - Max.	ESD	 ±8 ±30 ±15 ±30	kV

Parameter	Symbol	CDSOD323-						Unit
		Uni-T05L	Bi-T05LC	Uni-T08L	Bi-T08LC	Uni-T12L	Bi-T12LC	
Min. Breakdown Voltage @ 1 mA	V_{BR}	6.0	6.0	8.5	8.5	13.3	13.3	V
Working Peak Voltage	V_M	5.0	5.0	8.0	8.0	12.0	12.0	V
Maximum Clamping Voltage @ I_P = 1 A	V_C	9.8	9.8	13.4	13.4	19.0	19.0	V
Typical Clamping Voltage @ 8/20 µs @ I_{PP}	V_C	18.3 V @ 15 A	18.3 V @ 15 A	18.3 V @ 15 A	18.3 V @ 15 A	28.6 V @ 11 A	28.6 V @ 11 A	V
Maximum Leakage Current @ V_{WM}	I_D	5	5	2	2	1	1	µA
Typical Capacitance @ 0 V, 1 MHz	C_P	1.0						pF

Notes:
1. Part numbers with suffix “C” indicate bidirectional device, i.e. CDSOD323-T05LC.
2. For bidirectional devices only, the electrical specifications apply in both directions.
3. Unidirectional only: Positive potential is applied from pin 1 to 2.

*No lead detected in standard tests of homogeneous materials.
**RoHS Directive 2002/95/EC Jan. 27, 2003 including annex and RoHS Recast 2011/65/EU June 8, 2011.
Specifications are subject to change without notice.
The device characteristics and parameters in this data sheet can and do vary in different applications and actual device performance may vary over time.
Users should verify actual device performance in their specific applications.

Electrical & Thermal Characteristics (@ T_A = 25 °C Unless Otherwise Noted)

Parameter	Symbol	CDSOD323-						Unit
		Uni-T15L	Bi-T15LC	Uni-T18L	Bi-T18LC	Uni-T24L	Bi-T24LC	
Min. Breakdown Voltage @ 1 mA	V_{BR}	16.7	16.7	20.0	20.0	26.7	26.7	V
Working Peak Voltage	V_M	15.0	15.0	18.0	18.0	24.0	24.0	V
Maximum Clamping Voltage @ I_P = 1 A	V_C	24.0	24.0	29.0	29.0	43.0	43.0	V
Typical Clamping Voltage @ 8/20 µs @ I_{PP}	V_C	31.8 V @ 10 A	31.8 V @ 10 A	45.0 V @ 8 A	45.0 V @ 8 A	56.0 V @ 6 A	56.0 V @ 6 A	V
Maximum Leakage Current @ V_{WM}	I_D	1						µA
Typical Capacitance @ 0 V, 1 MHz	C_J	1.0						pF

Notes:
1. Part numbers with suffix “C” indicate bidirectional device, i.e. CDSOD323-T05LC.
2. For bidirectional devices only, the electrical specifications apply in both directions.
3. Unidirectional only: Positive potential is applied from pin 1 to 2.

Performance Graphs

Peak Pulse Power vs. Pulse Time

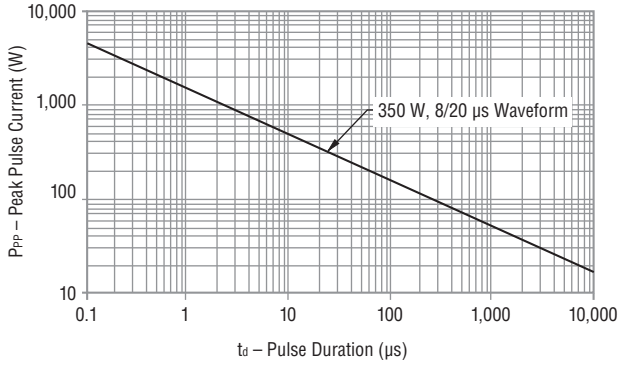

Pulse Waveform

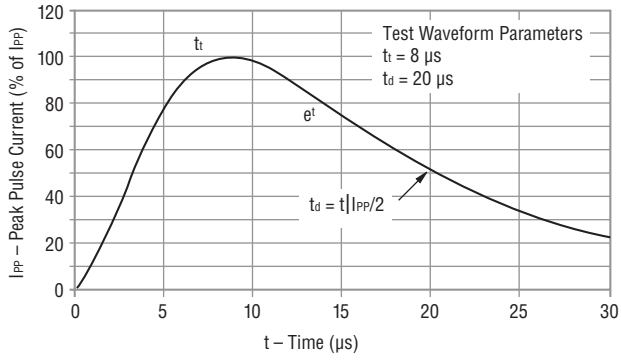

Block Diagram

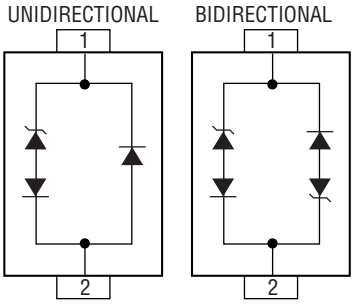

How to Order

CD SOD323 - T 05 LC

Common Code
Chip Diode

Package
• SOD323 = SOD-323 Package

Model
T = Transient Voltage Suppressor

Working Peak Reverse Voltage
05 = 5 V_{RWM} (Volts)

Suffix
L = Ultralow Capacitance Unidirectional Diode
LC = Ultralow Capacitance Bidirectional Diode

Specifications are subject to change without notice.
The device characteristics and parameters in this data sheet can and do vary in different applications and actual device performance may vary over time.
Users should verify actual device performance in their specific applications.

Product Dimensions

This is a molded JEDEC SOD-323 package with lead free 100 % Sn plating on the terminations. It weighs approximately 30 mg and has a flammability rating of UL 94V-0.

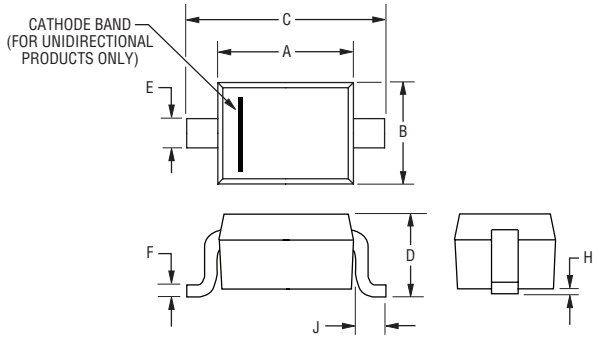

Dimensions	
A	1.60 - 1.90 (0.063 - 0.075)
B	1.15 - 1.45 (0.045 - 0.057)
C	2.39 - 2.70 (0.094 - 0.106)
D	0.92 - 1.14 (0.036 - 0.045)
E	0.25 - 0.40 (0.010 - 0.016)
F	0.08 - 0.20 (0.003 - 0.008)
H	0.13 (0.005) MAX.
J	0.30 - 0.45 (0.012 - 0.018)

DIMENSIONS: MM (INCHES)

Recommended Footprint

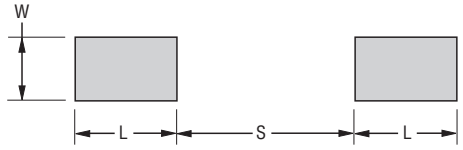

Dimensions (Nominal)	
L	0.80 (0.031)
S	1.40 (0.055)
W	0.50 (0.020)

DIMENSIONS: MM (INCHES)

Typical Part Marking

Each device has device marking outlined below and the unidirectional devices have an additional Polarity Band indicating the cathode.

CDSOD323-T05L T5
CDSOD323-T05LC S5
CDSOD323-T08L T8
CDSOD323-T08LC S8
CDSOD323-T12L T12
CDSOD323-T12LC S12
CDSOD323-T15L T15
CDSOD323-T15LC S15
CDSOD323-T18L T18
CDSOD323-T18LC S18
CDSOD323-T24L T24
CDSOD323-T24LC S24

Environmental Specifications

Moisture Sensitivity Level 1
ESD Classification (HBM) 3B

Specifications are subject to change without notice.
The device characteristics and parameters in this data sheet can and do vary in different applications and actual device performance may vary over time.
Users should verify actual device performance in their specific applications.

Packaging Information

The surface mount product is packaged in an 8 mm x 4 mm tape and reel format per EIA-481 standard.

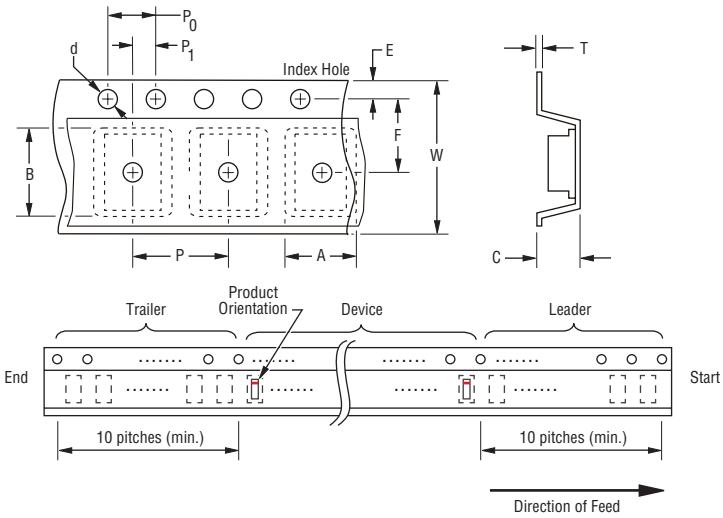

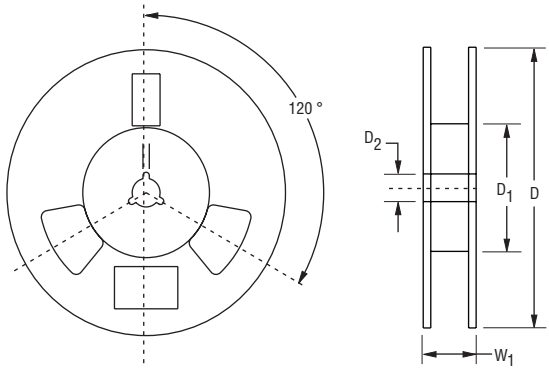

DIMENSIONS: MM (INCHES)

Devices are packed in accordance with EIA standard RS-481-A.

Item	Symbol	SOD323
Carrier Width	A	1.55 ± 0.10 (0.061 ± 0.004)
Carrier Length	B	2.90 ± 0.10 (0.114 ± 0.004)
Carrier Depth	C	1.35 ± 0.10 (0.053 ± 0.004)
Sprocket Hole	d	1.55 ± 0.05 (0.061 ± 0.002)
Reel Outside Diameter	D	178 (7.008)
Reel Inner Diameter	D_1	80.0 (3.150) Min.
Feed Hole Diameter	D_2	13.0 ± 0.20 (0.512 ± 0.008)
Sprocket Hole Position	E	1.75 ± 0.10 (0.069 ± 0.004)
Punch Hole Position	F	3.50 ± 0.05 (0.138 ± 0.002)
Punch Hole Pitch	P	4.00 ± 0.10 (0.157 ± 0.004)
Sprocket Hole Pitch	P_0	4.00 ± 0.10 (0.157 ± 0.004)
Embossment Center	P_1	2.00 ± 0.05 (0.079 ± 0.002)
Overall Tape Thickness	T	0.20 ± 0.10 (0.008 ± 0.004)
Tape Width	W	8.00 ± 0.20 (0.315 ± 0.008)
Reel Width	W_1	13.5 (0.531) Max.
Quantity per Reel	--	3,000

Asia-Pacific:
Tel: +886-2 2562-4117
Email: asiacus@bourns.com

Europe:
Tel: +36 88 520 390
Email: eurocus@bourns.com

The Americas:
Tel: +1-951 781-5500
Email: americus@bourns.com

www.bourns.com

Specifications are subject to change without notice.
The device characteristics and parameters in this data sheet can and do vary in different applications and actual device performance may vary over time. Users should verify actual device performance in their specific applications.

Общество с ограниченной ответственностью «МосЧип» ИНН 7719860671 / КПП 771901001
Адрес: 105318, г.Москва, ул.Щербаковская д.3, офис 1107

Данный компонент на территории Российской Федерации

Вы можете приобрести в компании MosChip.

Для оперативного оформления запроса Вам необходимо перейти по данной ссылке:

http://moschip.ru/get-element

Вы можете разместить у нас заказ для любого Вашего проекта, будь то серийное производство или разработка единичного прибора.

В нашем ассортименте представлены ведущие мировые производители активных и пассивных электронных компонентов.

Нашей специализацией является поставка электронной компонентной базы двойного назначения, продукции таких производителей как XILINX, Intel (ex.ALTERA), Vicor, Microchip, Texas Instruments, Analog Devices, Mini-Circuits, Amphenol, Glenair.

Сотрудничество с глобальными дистрибьюторами электронных компонентов, предоставляет возможность заказывать и получать с международных складов практически любой перечень компонентов в оптимальные для Вас сроки.

На всех этапах разработки и производства наши партнеры могут получить квалифицированную поддержку опытных инженеров.

Система менеджмента качества компании отвечает требованиям в соответствии с ГОСТ Р ИСО 9001, ГОСТ РВ 0015-002 и ЭС РД 009

Офис по работе с юридическими лицами:

105318, г.Москва, ул.Щербаковская д.3, офис 1107, 1118, ДЦ «Щербаковский»

Телефон: +7 495 668-12-70 (многоканальный)

Факс: +7 495 668-12-70 (доб.304)

E-mail: info@moschip.ru

Skype отдела продаж:
moschip.ru
moschip.ru_4
moschip.ru_6
moschip.ru_9